BUICK

MASTER

PARTS BOOK
ILLUSTRATIONS
CHASSIS SECTION

MODELS 1940 TO 1972 INCLUSIVE

EFFECTIVE FEBRUARY, 1972

BUICK

MASTER

PARTS BOOK

CHASSIS

ILLUSTRATION SECTION

EFFECTIVE FEBRUARY, 1972

INTRODUCTION

This ILLUSTRATION AND GENERAL INFORMATION CATALOG has been carefully compiled to assist in the rapid location and identification of service parts on all models to 1972, inclusive.

The illustrations and line drawings herein may not always show the exact part required, for identification purposes the group number can be readily located from an illustration covering a typical construction.

The layout of the information contained in this publication is such that the illustrations can easi y be removed for combining with the Chassis and Body Parts Catalog Sections by groups, or in any manner desired by individual Parts Managers. The "single" catalog concept can be maintained using this system, or the separate Illustration Catalog and Parts Listings Catalogs can be used.

The Master Parts Catalogs (Chassis and Body Sections) will be published every other month, complete. New or revised illustrations will be mailed to dealers subscribing to the Parts Catalog service as they are made available.

All specifications and illustrations contained in this literature are based on the latest product information available at the time of publication. The right is reserved to make changes at any time without notice in colors, materials, specifications, models, parts and prices. The "List Prices" shown in the Chassis and Body Sections, are suggested prices only for sales to consumers. Prices as listed in the Price Schedule are to be considered final and should be used should there be a discrepancy between the Parts Catalog and Price Schedule.

In the event a specific required service part is not shown on an illustration, and/or not listed in the Master Parts Catalogs, an order should be entered thru the normal shipping General Motors Parts Distribution Center for the required part by description. Give model year, model, trim number, color and any other pertinent information to the part.

LOCATING PARTS

Parts may be located in this catalog by the following methods:

BY ALPHABETICAL INDEX

If you know the name of the part, turn to the alphabetical index at the front of the catalog – find the part by name and note the group number – refer to this group for part number.

BY GROUP INDEX

On the inside of the front cover of each book is a group index showing the major contents by major group. This will refer you to the page of the group where a sub-group index is listed. Thru this sub-group index the service part group may be located by page number.

BY ILLUSTRATIONS

Refer to the illustration for a part or the unit the part would logically be a part of. Illustrations cover typical constructions and may not always show the exact detail of the part being located, but from the parts shown, performing the same or similar function, the group number can be readily located.

BY PART NUMBERS

When the part number is known, the group number under which the part is listed can readily be ascertained by referring to the Dealer Parts and Accessories Price Schedule, which lists the group number of every part.

First and after job parts are, if possible, identified by description. If a description is not sufficient to determine if a car is a first type or after job a serial break-point will be listed. In the event a part is neither illustrated or shown in the Alphabetical Index under the name used, it may be located by looking near the group of related parts.

KIT BOOKLET

A kit booklet listing all popular kits and the contents included in each kit is included as the last pages of the illustration book. This section will be updated to include new model parts approximately January of each year.

GENERAL MOTORS PARTS DIVISION WAREHOUSES

AREA	WHSE. NO.	WAREHOUSE	MAIL ADDRESS	AREA CODE	TELEPHONE NUMBER
Northeast	14	Baltimore	P.O. Box 2016, Baltimore, Maryland 21203	301	796-3000
	32	Boston	505 Blue Hill Drive, Westwood, Mass. 02090	617	329-2800
	12	Buffalo	P.O. Box 62, Buffalo, New York 14240	716	684-7900
	82	Hillside (B)	1201 Central Ave., Hillside, New Jersey 07205	201	355-3000
	94	New York (K)	P.O. Box 162, Bronx, New York 10454	212	993-3121
	27	New York	175 Central Ave., South, Bethpage L.I., N.Y. 11714	516	293-8822
	35	Newark	P.O. Box 72, Englewood, New Jersey 07631	201	567-8600
	15	Philadelphia	935 First Ave., King of Prussia, Pennsylvania 19406	215	265-5422
Southeast	8	Atlanta	6005 Peachtree - Industrial Blvd., Doraville, Ga. 30040	404	451-6331
	31	Birmingham	P.O. Box 6698, Irondale, Alabama 35210	205	595-8321
	16	Charlotte	P.O. Box 10467, Charlotte, N.C. 28201	704	392-0161
	26	Jacksonville	P.O. Box 10047, Jacksonville, Florida 32207	904	733-6540
	17	Memphis	P.O. Box 18299, Memphis, Tennessee 38118	901	363-9762
	24	New Orleans	P.O. Box 53347, New Orleans, Louisiana 70150	504	733-6662
	37	Richmond	P.O. Box 3-T, Richmond, Virginia 23207	703	737-4168
Mideast	9	Cincinnati	11575 Reading Road, Cincinnati, Ohio 45241	513	771-4110
	28	Cleveland	P.O. Box 7515, Cleveland, Ohio 44130	216	267-3790
	44	Detroit	36667 Schoolcraft, Livonia, Michigan 48151	313	261-0110
	25	Indianapolis	P.O. Box 1219, Indianapolis, Indiana 46206	317	359-9221
	22	Louisville	P.O. Box 779, Louisville, Kentucky 40201	502	964-6455
	13	Pittsburgh	P.O. Box 496, Carnegie, Pennsylvania 15106	412	923-1470
Midwest	11	Chicago	P.O. Box 5500A, Broadview, Ill. 60153	312	681-8850
	18	Des Moines	P.O. Box 1758, Des Moines, Iowa 50306	515	283-2393
	33	Fargo	P.O. Box 1851, Fargo, North Dakota 58103	701	237-6120
	5	Kansas City	P.O. Box 314, Shawnee Mission, Kansas 66201	913	888-1103
	61	Milwaukee	P.O. Box 1998, Milwaukee, Wisconsin 53201	414	964-1980
	4	Minneapolis	P.O. Box 509, Minneapolis, Minnesota 55440	612	941-3400
	29	Omaha	P.O. Box 3808, Omaha, Nebraska 68103	402	333-4550
	3	St. Louis	5801 N. Lindbergh Blvd., Hazelwood, Mo. 63042	314	731-5010
Southwest	7	Dallas	P.O. Box 47111, Dallas, Texas 75247	214	637-2230
	10	Denver	P.O. Box 5527, Denver, Colorado 80217	303	399-2296
	39	El Paso	P.O. Box 20003, El Paso, Texas 79998	915	778-8368
	30	Houston	P.O. Box 6774, Houston, Texas 77005	713	668-0404
	23	Oklahoma City	P.O. Box 26867, Oklahoma City, Oklahoma 73126	405	528-2366
	70	San Antonio	P.O. Box 1121, San Antonio, Texas 78206	512	532-7361
	41	Wichita	P.O. Box 57, Wichita, Kansas 67201	316	262-2673
West	38	Great Falls	P.O. Box 1111, Great Falls, Montana 59401	406	453-2416
	20	Los Angeles	8000 Van Nuys Blvd., Van Nuys, Calif. 91405	213	781-7650
	93	Los Angeles (K)	5370 W. Jefferson Blvd., Los Angeles, Calif. 90016	213	933-9501
	6	Oakland	P.O. Box 12065, Oakland, California 94604	415	632-5236
	19	Portland	P.O. Box 429, Beaverton, Oregon 97005	503	646-8281
	36	Salt Lake City	P.O. Box 177, North Salt Lake, Utah 84054	801	295-9421

(B) GMPD - Buick Warehouse
(K) GMPD - Cadillac Warehouse

BUICK CHASSIS & BODY
MAIN GROUP SEQUENCE

MEMORANDA

ILLUSTRATION INDEX

ENGINE & CLUTCH – GROUP 0.000

COOLING & OILING – GROUP 1.000

ELECTRICAL – GROUP 2.000

FUEL & EXHAUST – GROUP 3.000

TRANSMISSION – BRAKE – GROUP 4.000

BRAKE – REAR AXLE – GROUP 5.000

FRONT SUSPENSION & STEERING – GROUP 6.000

REAR SUSPENSION & BUMPER – GROUP 7.000

FENDER & HOODS – GROUP 8.000

AIR CONDITIONING & HEATER – GROUP 9.000

MEMORANDA

MEMORANDA

ABBREVIATIONS

A.I.R.	Air Injection Reactor
AC	Air Conditioning
Accel.	Accelerator
Adj.	Adjustable or Adjusting
Alt.	Altitude
Ant.	Antenna
AR	Air Ride
Assm	Assembled or Assembles
Assy	Assembly
Attach	Attaching
Auto	Automatic
AT	Automatic Transmission
Aux.	Auxiliary
BBL.	Barrel
Blk.	Black
Brg.	Bearing
Brk.	Brake
Brkt	Bracket
Bpr.	Bumper
Bshg	Bushing
Btry	Battery
C/Shaft.	Camshaft
Carb	Carburetor or Carburetion
Chg.	Change
Chg Pts.	Change Points
Chnl	Channel
Cl	Clutch
Ck/C	Crankcase
Ck/Shaft	Crankshaft
Col.	Column
Comb	Combination
Compt.	Compartment
Compr.	Compression
Condsr	Condenser
Conn	Connecting
Conv	Convertible
Cplg	Coupling
C/sunk	Countersunk
CT	Conventional Transmission
Ctr.	Center
Cvr.	Cover
Cyl.	Cylinder
Dbl.	Double
Def.	Defroster
Detach	Detachable
DF	Dynaflow
Diaph.	Diaphragm
Dia.	Diameter
Diff	Differential
Dir.	Direction
Disch.	Discharge
Distr.	Distributor
Div.	Division
Dr	Door
Elec	Electric
Emb.	Emblem
Eng.	Engine
Equipt	Equipment
Escn	Escutcheon
Evap	Evaporator
Exch	Exchange
Exh.	Exhaust
Expan.	Expansion
Ext.	Extension
Feg.	Facing
Fdr.	Fender
Fill	Fillister
Flwhl.	Flywheel
Flex	Flexible
Flg.	Flange
Fold	Folding
FP	Flight Pitch
Frt.	Front
F/Well	Fenderwell
Garn	Garnish
Gen.	Generator
Gr	Gear
Gaskt.	Gasket
HC	High Compression
HP	High Performance
Hdl.	Handle
HD	Heavy Duty
Hd	Head
HT	Hardtop
Htr.	Heater
Hdlp	Headlamp
Horiz.	Horizontal
Hsg.	Housing
Hyd.	Hydraulic
ID	Inside Diameter
Ign.	Ignition
Imit	Imitation
Incl	Includes or Inclusive
Instl.	Installing or Installed
Instr.	Instrument
Ins.	Insulator
Int.	Intake
Inter.	Intermediate
Jt	Joint
K/Pin.	King Pin
L	Left
LHD.	Left Hand Drive
Loc.	Location
Lwr.	Lower
Lub.	Lubrication
Man.	Manual
Matl	Material
Mech	Mechanical
Med.	Medium
Mbr.	Member
Mfld	Manifold
Mldg	Moulding
Modif.	Modification
Mtg.	Mounting
Mtr.	Motor
Mtr. Rod	Metering Rod
Nec.	Necessary
Neg.	Negative
ND	New Departure
NL	Not Listed
No	Number
Opr.	Operating
Orn.	Ornament
OD	Outside Diameter
OS	Oversize
Pack	Packing
Pass	Passenger
Pkg.	Package
Pos.	Positive
PCV.	Positive Crankcase Ventilation
Prop	Propeller
PB	Power Brakes
Pwr Pkg.	Power Package
PS	Power Steering
Press.	Pressure
Qt	Quart
Qtr.	Quarter
R.	Right
Rad.	Radiator
React.	Reaction
Rr	Rear
Rd	Round
Rect	Rectangular
Reg.	Regular
RS	Regular Steering
Repl	Replacement
Ret.	Retainer
RHD.	Right Hand Drive
Rkr.	Rocker
Reinf.	Reinforcement
Req.	Required
Sect	Section
Serv	Service
Sgl.	Single
Shk/Abs.	Shock Absorber
Sig.	Signal
Sltd	Slotted
Speedo	Speedometer
Spg.	Spring
Sq	Square
Stab	Stabilizer
Std.	Standard
Strg	Steering
Supt	Support
Synchro.	Synchronizing
T.	Trim
Temp	Temperature
Ter.	Terminal
Thd.	Thread
Therm.	Thermostat
Trans.	Transmission
Turb	Turbine
2T	Twin Turbine
3T	Triple Turbine
Univ	Universal
Upr.	Upper
Vac.	Vacuum
Vent	Ventilator
Vert	Vertical
W/	With
W/out.	Without
W/Pump	Water Pump
WB	Wheelbase
Wgt.	Weight
Whl.	Wheel
Whlhse	Wheelhouse
Wind	Window
W/S.	Windshield
W/Strip.	Weatherstrip

MODEL, STYLE, TRIM COMBINATION AND SERIAL NUMBER INFORMATION PLATES

Information appearing on the name plate gives style number, body number, trim combination number and paint number. All information on this name plate should be included in correspondence and orders.

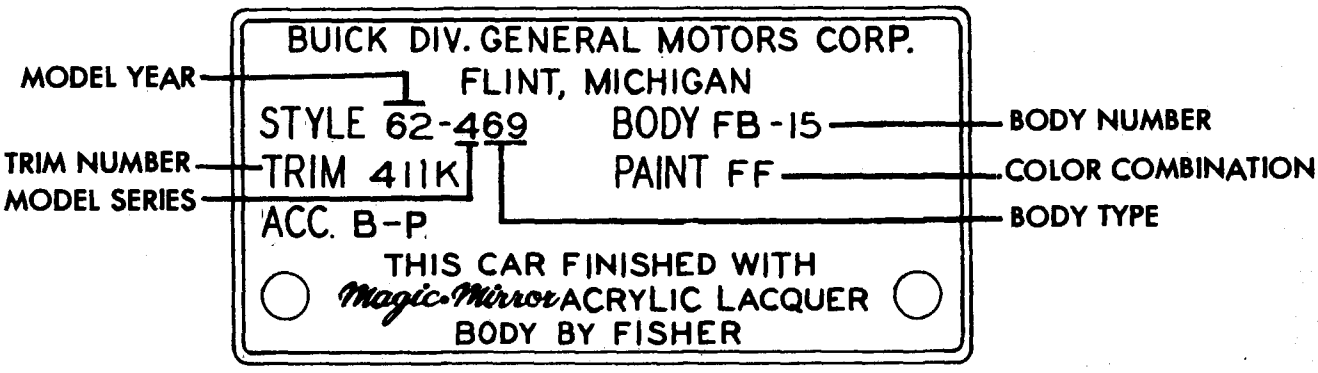

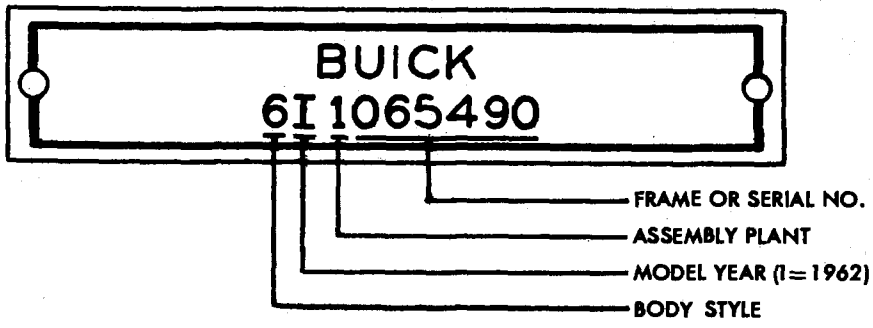

VEHICLE IDENTIFICATION PLATE
(ON LEFT SIDE OF INSTRUMENT PANEL)

BUICK PRODUCING PLANTS

B. O. P. PLANTS	CODE
Fremont, Calif.	Z
Kansas City, Kansas	X
Atlanta, Ga.	D
South Gate, Calif.	C
Wilmington, Del.	Y

CHEVROLET PLANTS	CODE
Kansas City, Missouri	K
Baltimore, Md.	B
Bloomfield, N. J.	V
Buick Home Plant Code	H

	VEHICLE IDENTIFICATION NUMBER												
SAMPLE	4	5	4	6	7	9	H	1	0	0	0	0	1
	Mfg. Code	Model				Yr.	Alph Mfg. Plt. Code	6-Digit Sequential Number					

Series Identification Chart		
Name	Series Code No.	
	6 Cyl.	8 Cyl.
Special Deluxe	33	34
Skylark	35	-
Skylark Custom	-	44
Skylark Gran Sport		46
Le Sabre		52
Le Sabre Custom		54
Wildcat		64
Wildcat Custom		66
Electro 225		82
Electro 225 Custom		84
Riviera		94

Body Style Code No.	
2 Dr. Coupe	27
4 Dr. Station Wagon-2 Seat	35-36
2 Dr. Hardtop Coupe	37
4 Dr. Hardtop	39
2 Dr. Hardtop Coupe	57-87
4 Dr. Station Wagon-2 Seat	56
4 Dr. Station Wagon-2 Seat	66
2 Dr. Convertible	67
4 Dr. Sedan	69

This format is used by all General Motors Car Divisions. Manufacturer codes are assigned as follows:

Chevrolet - 1, Pontiac - 2, Oldsmobile - 3, Buick - 4,
Cadillac - 5, and Canada - 6.

YEAR	MODEL	TYPE OF BODY	FISHER NO.	WHEELBASE	ENGINE & SERIAL NO.
	CENTURY SERIES - 8 CYLINDER 4 1/8" BORE X 3.4" STROKE 54.45 S.A.E. H.P.				AND START AT
					E1-001001 FLINT, G
1958	61	SEDAN.....	584669	122"	E2-001001 SOUTH GATE, BC
1958	63	RIVIERA SEDAN.....	584639	122"	E3-001001 LINDEN, BL
1958	66C	CONVERTIBLE.....	584667X	122"	E4-001001 KANSAS CITY, BK
1958	66R	RIVIERA COUPE.....	584637	122"	E5-001001 WILMINGTON, BW
1958	69	RIVIERA ESTATE WAGON.....	584682	122"	E6-001001 ATLANTA, BA
	SUPER SERIES - 8 CYLINDER 4 1/8" BORE X 3.4" STROKE 54.45 S.A.E. H.P.				E7-001001 FRAMINGHAM, BF
					E8-001001 ARLINGTON, BT
1958	53	RIVIERA SEDAN.....	584539	127.5"	.....
1958	56R	RIVIERA COUPE.....	584537	127.5"	.....
	ROADMASTER - 8 CYLINDER 4 1/8" BORE X 3.4" STROKE 54.45 S.A.E. H.P.				
1958	75C	CONVERTIBLE.....	584767X	127.5"	.....
1958	75	RIVIERA SEDAN.....	584739X	127.5"	.....
1958	75R	RIVIERA COUPE.....	584737X	127.5"	.....
	LIMITED SERIES - 8 CYLINDER 4 1/8" BORE X 3.4" STROKE 54.45 S.A.E. H.P.				
1958	750	RIVIERA SEDAN.....	584839X	127.5"	.....
1958	756	CONVERTIBLE.....	584867X	127.5"	.....
1958	755	RIVIERA COUPE.....	584837X	127.5"	.....
	LE SABRE - 8 CYLINDER 4.125" BORE X 3.4" STROKE 54.45 S.A.E. H.P.				
1959	4419	4-DOOR SEDAN.....		123"	.....
1959	4439	4-DOOR HARDTOP.....		123"	.....
1959	4437	2-DOOR HARDTOP.....		123"	.....
1959	4467	2-DOOR CONVERTIBLE.....		123"	.....
1959	4411	2-DOOR SEDAN.....		123"	1959 ENGINE AND FRAME
	INVICTA - 8 CYLINDER 4.1875" BORE X 3.640" STROKE 56.11 S.A.E. H.P.				NUMBER ARE THE SAME AND START AT:
1959	4619	4-DOOR SEDAN.....		123"	F1-001001 FLINT, G
1959	4639	4-DOOR HARDTOP.....		123"	F2-001001 SOUTH GATE, BC
1959	4637	2-DOOR HARDTOP.....		123"	F3-001001 LINDEN, BL
1959	4667	2-DOOR CONVERTIBLE.....		123"	F4-001001 KANSAS CITY, BK
1959	4635	4-DOOR ESTATE WAGON.....		123"	F5-001001 WILMINGTON, BW
	ELECTRA - 8 CYLINDER 4.1875" BORE X 3.640" STROKE 56.11 S.A.E. H.P.				F6-001001 ATLANTA, BA
					F7-001001 FRAMINGHAM, BF
1959	4719	4-DOOR SEDAN.....		126.3"	F8-001001 ARLINGTON, BT
1959	4739	4-DOOR HARDTOP.....		126.3"	.....
1959	4737	2-DOOR HARDTOP.....		126.3"	.....
	ELECTRA "225" - 8 CYLINDER 4.1875" BORE X 3.640" STROKE 56.11 S.A.E. H.P.				
1959	4829	4-DOOR RIVIERA SEDAN.....		126.3"	.....
1959	4839	4-DOOR HARDTOP.....		126.3"	.....
1959	4867	2-DOOR CONVERTIBLE.....		126.3"	.....
	LE SABRE - 8 CYLINDER 4.125" BORE X 3.4" STROKE 54.45 S.A.E. H.P.				
1960	4419	4-DOOR SEDAN.....		123"	.....
1960	4439	4-DOOR HARDTOP.....		123"	.....
1960	4437	2-DOOR HARDTOP.....		123"	.....
1960	4411	2-DOOR SEDAN.....		123"	.....
1960	4467	2-DOOR CONVERTIBLE.....		123"	1960 ENGINE AND FRAME
1960	4435	4-DOOR ESTATE WAGON (2 SEATS).....		123"	NUMBER ARE THE SAME
1960	4445	4-DOOR ESTATE WAGON (3 SEATS).....		123"	AND START AT:
	INVICTA - 8 CYLINDER 4.1875" BORE X 3.640" STROKE 56.11 S.A.E. H.P.				G1-001001 FLINT, G
					G2-001001 SOUTH GATE, BC
1960	4619	4 DOOR SEDAN.....		123"	G3-001001 LINDEN, BL
1960	4639	4-DOOR HARDTOP.....		123"	G4-001001 KANSAS CITY, BK
1960	4637	2-DOOR HARDTOP.....		123"	G5-001001 WILMINGTON, BW
1960	4667	2-DOOR CONVERTIBLE.....		123"	G6-001001 ATLANTA, BA
1960	4667	2-DOOR CONVERTIBLE.....		123"	G7-001001 FRAMINGHAM, BF
1960	4635	4-DOOR ESTATE WAGON (2 SEATS).....		123"	G8-001001 ARLINGTON, BT
1960	4645	4-DOOR ESTATE WAGON (3 SEATS).....		123"	.....
	ELECTRA - 8 CYLINDER 4.1875" BORE X 3.640" STROKE 56.11 S.A.E. H.P.				
1960	4719	4-DOOR SEDAN.....		126.3"	.....
1960	4739	4-DOOR HARDTOP.....		126.3"	.....
1960	4737	2-DOOR HARDTOP.....		126.3"	.....

YEAR	MODEL	TYPE OF BODY	FISHER NO.	WHEELBASE	ENGINE & SERIAL NO.
	ELECTRA "225" - 8 CYLINDER 4.1875" BORE X 3.640" STROKE 56.11 S.A.E. H.P.				
1960	4829	4-DOOR RIVIERA SEDAN		126.3"	
1960	4839	4-DOOR HARDTOP		126.3"	
1960	4867	2-DOOR CONVERTIBLE		126.3"	
	SPECIAL SERIES - 8 CYLINDER 3.5" BORE X 2.8" STROKE 39.2 S.A.E. H.P.				
1961	4019	4-DOOR SEDAN		112"	
1961	4027	2-DOOR COUPE		112"	1961 ENGINE & SERIAL
1961	4035	4-DOOR STATION WAGON (2 SEATS)		112"	NUMBER ARE THE SAME
1961	4045	4-DOOR STATION WAGON (3 SEATS)		112"	STARTING AT:
1961	4119	DELUX 4-DOOR SEDAN		112"	4000-4100-4300
1961	4135	DELUX 4-DOOR STATION WAGON (2 SEATS)		112"	H1-501001 FLINT, FB
1961	4317	SKYLARK 2-DOOR COUPE		112"	H2-501001 SOUTH GATE, BC
	LE SABRE - 8 CYLINDER 4.125" BORE X 3.4" STROKE 54.45 S.A.E. H.P.				
1961	4411	2-DOOR SEDAN		123"	
1961	4435	4-DOOR ESTATE WAGON (2 SEATS)		123"	
1961	4437	2-DOOR HARDTOP		123"	4400-4600-4800
1961	4439	4-DOOR HARDTOP		123"	H1-001001 FLINT, FB
1961	4445	4-DOOR ESTATE WAGON (3 SEATS)		123"	H2-001001 SOUTH GATE, BC
1961	4467	2-DOOR CONVERTIBLE		123"	H3-001001 LINDEN, BL
1961	4469	4-DOOR SEDAN		123"	H4-001001 KANSAS CITY, BK
	INVICTA - 8 CYLINDER 4.1875" BORE X 3.640" STROKE 56.11 S.A.E. H.P.				H5-001001 WILMINGTON, BW H6-001001 ATLANTA, BA
1961	4637	2-DOOR HARDTOP		123"	H7-001001 FRAMINGHAM, BF
1961	4639	4-DOOR HARDTOP		123"	H8-001001 ARLINGTON, BT
1961	4667	2-DOOR CONVERTIBLE		123"	
	ELECTRA - 8 CYLINDER 4.1875" BORE X 3.640" STROKE 56.11 S.A.E. H.P.				
1961	4719	4-DOOR SEDAN		126"	
1961	4737	2-DOOR HARDTOP		126"	
1961	4739	4-DOOR HARDTOP		126"	
	ELECTRA '225" - 8 CYLINDER 4.1875" BORE X 3.640" STROKE 56.11 S.A.E. H.P.				
1961	4829	4-DOOR HARDTOP		126"	
1961	4867	2-DOOR CONVERTIBLE		126"	
	SPECIAL SERIES - 6 CYLINDER 3.625" BORE X 3.2" STROKE 31.54 S.A.E. H.P. 8 CYLINDER 3.5" BORE X 2.8" STROKE 39.2 S.A.E. H.P.				
1962	4019	4-DOOR SEDAN		112"	1962 ENGINE & SERIAL
1962	4027	2-DOOR COUPE		112"	NUMBER ARE THE SAME
1962	4035	4-DOOR STATION WAGON (2 SEATS)		112"	STARTING AT:
1962	4045	4-DOOR STATION WAGON (3 SEATS)		112"	4000-4100-4300
1962	4067	2-DOOR CONVERTIBLE		112"	11-501001 FLINT, FB
1962	4119	DELUX 4-DOOR SEDAN		112"	12-501001 SOUTH GATE, BC
1962	4135	DELUX 4-DOOR STATION WAGON (2 SEATS)		112"	13-501001 KANSAS CITY, BK
1962	4167	DELUX CONVERTIBLE		112"	
1962	4347	2-DOOR SKYLARK HARDTOP		112"	
1962	4367	2-DOOR SKYLARK CONVERTIBLE		112"	
	LE SABRE - 8 CYLINDER 4.1875" BORE X 3.640" STROKE 56.11 S.A.E. H.P.				
1962	4411	2-DOOR SEDAN		123"	4400-4600-4800
1962	4439	4-DOOR HARDTOP		123"	11-001001 FLINT, FB
1962	4447	2-DOOR HARDTOP		123"	12-001001 SOUTH GATE, BC
1962	4469	4-DOOR SEDAN		123"	13-001001 LINDEN, BL
	INVICTA - 8 CYLINDER 4.1875" BORE X 3.640" STROKE 56.11 S.A.E. H.P.				14-001001 KANSAS CITY, BK 15-001001 WILMINGTON, BW
1962	4635	4-DOOR ESTATE WAGON (2 SEATS)		123"	16-001001 ATLANTA, BA
1962	4639	4-DOOR HARDTOP		123"	17-001001 FRAMINGHAM, BF
1962	4645	4-DOOR ESTATE WAGON (3 SEATS)		123"	18-001001 ARLINGTON, BT
1962	4647	2-DOOR HARDTOP		123"	
1962	4667	2-DOOR CONVERTIBLE		123"	
	ELECTRA "225" - 8 CYLINDER 4.1875" BORE X 3.640" STROKE 56.11 S.A.E. H.P.				
1962	4819	4-DOOR SEDAN		126"	
1962	4829	4-DOOR PILLARLESS (6 WIND.)		126"	
1962	4839	4-DOOR HARDTOP		126"	
1962	4847	2-DOOR HARDTOP		126"	
1962	4867	2-DOOR CONVERTIBLE		126"	

MODEL CHART—1963

MODEL	TYPE OF BODY	
	Special	
4019	4 Door Sedan	(Std.)
4027	2 Door Sedan	(Std.)
4035	4 Door Estate Wagon (2 Seats)	(Std.)
4045	4 Door Estate Wagon (3 Seats)	(Std.)
4067	2 Door Convertible	(Std.)
4119	4 Door Sedan	(Dlx.)
4135	4 Door Estate Wagon (2 Seats)	(Dlx.)
	Skylark	
4347	2 Door Coupe	(Dlx.)
4367	2 Door Convertible	(Dlx.)

1963 Special Models start at the following serial numbers:

ENGINE & FRAME NO.	LOCATION	BODY NO. PREFIX
J1-501001	Flint	FB
J2-501001	South Gate	BC
J3-501001	Kansas City	BK

	Le Sabre	
4411	2 Door Sedan	
4435	4 Door Estate Wagon (2 Seats)	
4439	4 Door Hardtop	
4445	4 Door Estate Wagon (3 Seats)	
4447	2 Door Hardtop	
4467	2 Door Convertible	
4469	4 Door Sedan	
	Invicta	
4635	4 Door Estate Wagon (2 Seats)	
	Wildcat	
4639	4 Door Hardtop	
4647	2 Door Coupe	
4667	2 Door Convertible	
	Riviera	
4747	2 Door Sports Coupe	
	Electra "225"	
4819	4 Door Sedan	
4829	4 Door Riviera Sedan	
4839	4 Door Hardtop	
4847	2 Door Hardtop	
4867	2 Door Convertible	

1963 Models start at the following serial numbers:

ENGINE & FRAME NO.	LOCATION	BODY NO. PREFIX
J1-001001	Flint	FB
J2-001001	South Gate	BC
J3-001001	Linden	BL
J4-001001	Kansas City	BK
J5-001001	Wilmington	BW
J6-001001	Atlanta	BA
J7-001001	Framingham	BF
J8-001001	Arlington	BT

1964 MODEL IDENTIFICATION DATA

Model & Body Style	Wheel Base	Cyl.	Bore & Stroke	Piston Disp. (Cu. In.)	Taxable H.P.	Weight	Air Cleaner Identification	Eng. Code
SPECIAL SERIES AND SKYLARK SERIES								
4027 2 Dr. Coupe	115"	V6	3.750 x 3.40	225	33.748	2983	Fireball V-6	KH
4035 4 Dr. Sta. Wag. (2 Seat)	115"	V6	3.750 x 3.40	225	33.748	3258	Fireball V-6	KH
4067 2 Dr. Convertible	115"	V6	3.750 x 3.40	225	33.748	3099	Fireball V-6	KH
4069 4 Dr. Sedan	115"	V6	3.750 x 3.40	225	33.748	3000	Fireball V-6	KH
4127 2 Dr. Coupe (Deluxe)	115"	V6	3.750 x 3.40	225	33.748	2998	Fireball V-6	KH
4135 4 Dr. Sta. Wag. (2 Seat-Deluxe)	115"	V6	3.750 x 3.40	225	33.748	3277	Fireball V-6	KH
4169 4 Dr. Sedan (Deluxe)	115"	V6	3.750 x 3.40	225	33.748	3018	Fireball V-6	KH
4337 2 Dr. Skylark Sport Coupe	115"	V6	3.750 x 3.40	225	33.748	3049	Fireball V-6	KH
4367 2 Dr. Skylark Convertible	115"	V6	3.750 x 3.40	225	33.748	3169	Fireball V-6	KH
4369 4 Dr. Skylark Sedan	115"	V6	3.750 x 3.40	225	33.748	3062	Fireball V-6	KH
4027 2 Dr. Coupe	115"	V8	3.750 x 3.40	300	45.00	2999	Wildcat 310 (2BBL) or Wildcat 355 (4BBL)	KL / KP
4035 4 Dr. Sta. Wag. (2 Seat)	115"	V8	3.750 x 3.40	300	45.00	3274		
4067 2 Dr. Convertible	115"	V8	3.750 x 3.40	300	45.00	3115		
4069 4 Dr. Sedan	115"	V8	3.750 x 3.40	300	45.00	3016		
4127 2 Dr. Coupe (Deluxe)	115"	V8	3.750 x 3.40	300	45.00	3014		
4135 4 Dr. Sta. Wag. (2 Seat-Deluxe)	115"	V8	3.750 x 3.40	300	45.00	3293		
4169 4 Dr. Sedan (Deluxe)	115"	V8	3.750 x 3.40	300	45.00	3034		
4255 4 Dr. Skylark Spt. Wg. (2 Seat)	120"	V8	3.750 x 3.40	300	45.00	3557		
4265 4 Dr. Skylark Spt. Wg. (3 Seat)	120"	V8	3.750 x 3.40	300	45.00	3689		
4337 2 Dr. Skylark Sport Coupe	115"	V8	3.750 x 3.40	300	45.00	3065		
4355 4 Dr. Sky. Cust. Spt. Wg. (2 St.)	120"	V8	3.750 x 3.40	300	45.00	3595		
4365 4 Dr. Sky. Cust. Spt. Wg. (3 St.)	120"	V8	3.750 x 3.40	300	45.00	3727		
4367 2 Dr. Skylark Convertible	115"	V8	3.750 x 3.40	300	45.00	3185		
4369 4 Dr. Skylark Sedan	115"	V8	3.750 x 3.40	300	45.00	3078		
LE SABRE SERIES								
4439 4 Dr. Hardtop	123"	V8	3.750 x 3.40	300	45.00	3730	Wildcat 310 (2BBL)	KL
4447 2 Dr. Sport Coupe	123"	V8	3.750 x 3.40	300	45.00	3629		
4467 2 Dr. Convertible	123"	V8	3.750 x 3.40	300	45.00	3787	Wildcat 355 (4BBL)	KP
4469 4 Dr. Sedan	123"	V8	3.750 x 3.40	300	45.00	3693		
4635 4 Dr. Estate Wagon (2 Seat)	123"	V8	4.1875 x 3.64	401	56.11	4352	Wildcat 445 (4BBL)	KT
4645 4 Dr. Estate Wagon (3 Seat)	123"	V8	4.1875 x 3.64	401	56.11	4362		
WILDCAT SERIES								
4639 4 Dr. Hardtop	123"	V8	4.1875 x 3.64	401*	56.11	4058	Wildcat 445	KT
4647 2 Dr. Sport Coupe	123"	V8	4.1875 x 3.64	401*	56.11	4003	Wildcat 445	KT
4667 2 Dr. Convertible	123"	V8	4.1875 x 3.64	401*	56.11	4076	Wildcat 445	KT
4669 4 Dr. Sedan	123"	V8	4.1875 x 3.64	401*	56.11	4021	Wildcat 445	KT
ELECTRA 225 SERIES								
4819 4 Dr. Sedan	126"	V8	4.1875 x 3.64	401*	56.11	4212	Wildcat 445	KT
4829 4 Dr. Sedan (Pillarless)	126"	V8	4.1875 x 3.64	401*	56.11	4238	Wildcat 445	KT
4839 4 Dr. Hardtop	126"	V8	4.1875 x 3.64	401*	56.11	4229	Wildcat 445	KT
4847 2 Dr. Sport Coupe	126"	V8	4.1875 x 3.64	401*	56.11	4149	Wildcat 445	KT
4867 2 Dr. Convertible	126"	V8	4.1875 x 3.64	401*	56.11	4280	Wildcat 445	KT
RIVIERA SERIES								
4747 2 Dr. Riviera Sport Coupe	117"	V8	4.3125 x 3.64	425**	59.51	3951	Wildcat 465	KW

* 425 Eng. (1-4BBL) or 425 Eng. (2-4BBL) Optional.
** 425 Eng. (2-4BBL) Optional.

1964 Models start at the following serial numbers:

ENGINE & FRAME NO.	LOCATION	BODY NO. PREFIX
K1-001001	Flint	FB
K2-001001	South Gate	BC
K3-001001	Fremont	BF
K4-001001	Kansas City, Kansas	BK
K5-001001	Wilmington	BW
K6-001001	Atlanta	BA
K7-001001	Baltimore	BA
K8-001001	Kansas City, Mo.	KC

NOTE

CATALOGUING MODEL DESIGNATION

PLEASE NOTE: The car model tag, or identification plate, will have the numeral "4" as a prefix to the series and body style. For cataloguing purposes this numeral "4" denoting Buick has been deleted and only the four numerals for series and body style are used.

For example: A 2-door coupe V-6 service part could be listed:

3327 - If the part is peculiar only to that model
3300 - If peculiar to all Special V-6
33-3400 - If common to Special V-6 and V-8
3000 - If common to Special and Special Deluxe
Special - If common to all Special
Skylark - If common to all Skylark

SERIES	COMPARABLE 1964 MODELS	1965 BODY STYLE	MODEL V6	MODEL V8				
SPECIAL	4027	2-Door Coupe	3327	3427	33-3400	3000	SPECIAL	A
	4035	4-Door, 2-Seat Station Wagon	3335	3435				
	4067	2-Door Convertible	3367	3467				
	4069	4-Door Sedan	3369	3469				
SPECIAL (Deluxe)	4135	4-Door, 2-Seat Station Wagon	3535	3635	35-3600			
	4169	4-Door Sedan	3569	3669				
SKYLARK	4255	4-Door, 2-Seat Sportwagon		4255	-4200	4000	SKYLARK	
	4265	4-Door, 3-Seat Sportwagon		4265				
		2-Door Coupe	4327	4427	43-4400			
	4337	2-Door Hardtop	4337	4437				
	4367	2-Door Convertible	4367	4467				
	4369	4-Door Sedan	4369	4469				
SKYLARK (Custom)	4355	4-Door, 2-Seat Sportwagon		4455	4400			
	4365	4-Door, 3-Seat Sportwagon		4465				
LE SABRE	4339	2-Door Hardtop		5237	5200	5000	LE SABRE	B
		4-Door Hardtop		5239				
		4-Door Sedan		5269				
LE SABRE (Custom)	4437	2-Door Hardtop		5437	5400			
	4439	4-Door Hardtop		5439				
	4467	2-Door Convertible		5467				
	4469	4-Door Sedan		5469				
WILDCAT		2-Door Hardtop		6237	6200	6000	WILDCAT	
		4-Door Hardtop		6239				
		4-Door Sedan		6269				
WILDCAT (Deluxe)	4647	2-Door Hardtop		6437	6400			
	4639	4-Door Hardtop		6439				
	4667	2-Door Convertible		6467				
	4669	4-Door Sedan		6469				
WILDCAT (Custom)		2-Door Hardtop		6337	6600			
		4-Door Hardtop		6639				
		2-Door Convertible		6667				
ELECTRA		2-Door Hardtop		8237	8200	8000	ELECTRA	C
		4-Door Hardtop		8239				
	4819	4-Door Sedan		8269				
ELECTRA (Custom)	4847	2-Door Hardtop		8437	8400			
	4839	4-Door Hardtop		8439				
	4867	2-Door Hardtop		8467				
		4-Door Sedan		8469				
RIVIERA	4747	2-Door Hardtop		9447		9000	RIVIERA	E

BUICK MOTOR DIVISION
GENERAL MOTORS CORPORATION
FLINT, MICHIGAN

1965 MODEL IDENTIFICATION DATA

MODEL & BODY STYLE	CYL.	WHEEL BASE	BORE & STROKE	PISTON DISP. (CU. IN.)	TAXABLE H. P.	TIRE SIZE	WEIGHT	AIR CLEANER IDENTIFICATION	ENGINE CODE
SPECIAL									
43327 2 Dr. Coupe	V6	115"	3.750 x 3.400	225	33.748	6.95" x 14"	2977	None	LH
43335 4 Dr. Sta. Wag. (2 Seat)	V6	115"	3.750 x 3.400	225	33.748	7.35" x 14"	3258	"	
43367 2 Dr. Convertible	V6	115"	3.750 x 3.400	225	33.748	6.95" x 14"	3087	"	
43369 4 Dr. Sedan	V6	115"	3.750 x 3.400	225	33.748	6.95" x 14"	3010	"	
43427 2 Dr. Coupe	V8	115"	3.750 x 3.400	300	45.0	7.35" x 14"	3080	WILDCAT	LL
43435 4 Dr. Sta. Wag. (2 Seat)	V8	115"	3.750 x 3.400	300	45.0	7.35" x 14"	3353	"310"	OR
43467 2 Dr. Convertible	V8	115"	3.750 x 3.400	300	45.0	7.35" x 14"	3197		LP
43469 4 Dr. Sedan	V8	115"	3.750 x 3.400	300	45.0	7.35" x 14"	3117		
SPECIAL DELUXE									
43535 4 Dr. Sta. Wag. (2 Seat)	V6	115"	3.750 x 3.400	225	33.748	7.35" x 14"	3260	None	LH
43569 4 Dr. Sedon	V6	115"	3.750 x 3.400	225	33.748	6.95" x 14"	3016	"	
43635 4 Dr. Sta. Wag. (2 Seat)	V8	115"	3.750 x 3.400	300	45.0	7.35" x 14"	3369	WILDCAT	LL OR
43669 4 Dr. Sedon	V8	115"	3.750 x 3.400	300	45.0	7.35" x 14"	3143	"310"	LP
SKYLARK									
44327 2 Dr. Coupe	V6	115"	3.750 x 3.400	225	33.748	6.95" x 14"	3035	None	LH
44337 2 Dr. Sport Coupe	V6	115"	3.750 x 3.400	225	33.748	6.95" x 14"	3057	"	
44367 2 Dr. Convertible	V6	115"	3.750 x 3.400	225	33.748	6.95" x 14"	3149	"	
44369 4 Dr. Sedan	V6	115"	3.750 x 3.400	225	33.748	6.95" x 14"	3086	"	
44427 2 Dr. Coupe	V8	115"	3.750 x 3.400	300*	45.0	7.35" x 14"	3146	WILDCAT	LL
44437 2 Dr. Sport Coupe	V8	115"	3.750 x 3.400	300*	45.0	7.35" x 14"	3198	"310"	OR
44467 2 Dr. Convertible	V8	115"	3.750 x 3.400	300*	45.0	7.35" x 14"	3294		LP
44469 4 Dr. Sedan	V8	115"	3.750 x 3.400	300	45.0	7.35" x 14"	3194		
GRAN SPORT									
44427 2 Dr. Coupe	V8	115"	4.1875 x 3.640	400	56.11	7.75" x 14"	3394	WILDCAT	LR
44437 2 Dr. Sport Coupe	V8	115"	4.1875 x 3.640	400	56.11	7.75" x 14"	3407	"445"	
44467 2 Dr. Convertible	V8	115"	4.1875 x 3.640	400	56.11	7.75" x 14"	3449		
SPORTWAGON									
44255 4 Dr. Sta. Wag. (2 Seat)	V8	120"	3.750 x 3.400	300	45.0	7.75" x 14"	3642	WILDCAT	LL
44265 4 Dr. Sta. Wag. (3 Seat)	V8	120"	3.750 x 3.400	300	45.0	7.75" x 14"	3750	"310"	OR
44455 4 Dr. Cust. Sta. Wag. (2 Seat)	V8	120"	3.750 x 3.400	300	45.0	7.75" x 14"	3690		LP
44465 4 Dr. Cust. Sta. Wag. (3 Seat)	V8	120"	3.750 x 3.400	300	45.0	7.75" x 14"	3802		
LESABRE								WILDCAT	LL
45237 2 Dr. Sport Coupe	V8	123"	3.750 x 3.400	300	45.0	8.15" x 15"	3753	"310" 2BBL	OR
45239 4 Dr. Hardtop Sedan	V8	123"	3.750 x 3.400	300	45.0	8.15" x 15"	3809	WILDCAT	LP
45269 4 Dr. Sedan	V8	123"	3.750 x 3.400	300	45.0	8.15" x 15"	3788	"355" 4BBL	
LESABRE CUSTOM									
45437 2 Dr. Sport Coupe	V8	123"	3.750 x 3.400	300	45.0	8.15" x 15"	3724	WILDCAT	LL
45439 4 Dr. Hardtop Sedan	V8	123"	3.750 x 3.400	300	45.0	8.15" x 15"	3811	"310" 2BBL	OR
45467 2 Dr. Convertible	V8	123"	3.750 x 3.400	300	45.0	8.15" x 15"	3812	WILDCAT	LP
45469 4 Dr. Sedan	V8	123"	3.750 x 3.400	300	45.0	8.15" x 15"	3777	"355" 4BBL	
WILDCAT									
46237 2 Dr. Sport Coupe	V8	126"	4.1875 x 3.640	401**	56.11	8.45" x 15"	3988	WILDCAT	LT
46239 4 Dr. Hordtop Sedan	V8	126"	4.1875 x 3.640	401**	56.11	8.45" x 15"	4089	"445"	
46269 4 Dr. Sedan	V8	126"	4.1875 x 3.640	401**	56.11	8.45" x 15"	4058		
WILDCAT DELUXE									
46437 2 Dr. Sport Coupe	V8	126"	4.1875 x 3.640	401**	56.11	8.45" x 15"	4014	WILDCAT	LT
46439 4 Dr. Hardtop Sedan	V8	126"	4.1875 x 3.640	401**	56.11	8.45" x 15"	4075	"445"	
46467 2 Dr. Convertible	V8	126"	4.1875 x 3.640	401**	56.11	8.45" x 15"	4069		
46469 4 Dr. Sedan	V8	126"	4.1875 x 3.640	401**	56.11	8.45" x 15"	4046		
WILDCAT CUSTOM									
46637 2 Dr. Sport Coupe	V8	126"	4.1875 x 3.640	401**	56.11	8.45" x 15"	4047	WILDCAT	LT
46639 4 Dr. Hardtop Sedan	V8	126"	4.1875 x 3.640	401**	56.11	8.45" x 15"	4160	"445"	
46667 2 Dr. Convertible	V8	126"	4.1875 x 3.640	401**	56.11	8.45" x 15"	4087		
ELECTRA 225									
48237 2 Dr. Sport Coupe	V8	126"	4.1875 x 3.640	401**	56.11	8.75" x 15"	4208	WILDCAT	LT
48239 4 Dr. Hardtop Sedan	V8	126"	4.1875 x 3.640	401**	56.11	8.75" x 15"	4284	"445"	
48269 4 Dr. Sedan	V8	126"	4.1875 x 3.640	401**	56.11	8.75" x 15"	4261		
ELECTRA 225 CUSTOM									
48437 2 Dr. Sport Coupe	V8	126"	4.1875 x 3.640	401**	56.11	8.75" x 15"	4228	WILDCAT	LT
48439 4 Dr. Hardtop Sedan	V8	126"	4.1875 x 3.640	401**	56.11	8.75" x 15"	4344	"445"	
48467 2 Dr. Convertible	V8	126"	4.1875 x 3.640	401**	56.11	8.75" x 15"	4325		
48469 4 Dr. Sedan	V8	126"	4.1875 x 3.640	401**	56.11	8.75" x 15"	4292		
RIVIERA								WILDCAT	LT
49447 2 Dr. Riviera Sport Coupe	V8	117"	4.1875 x 3.640	401**	56.11	8.45" x 15"	4036	"445"	

* THESE MODELS ALSO AVAILABLE IN GRAN SPORT OPTION WITH 400 CU. IN. ENG. (WILDCAT "445") CODE LR

** THESE MODELS ALSO AVAILABLE WITH 425 CU. IN. ENG. (WILDCAT "465" 4BBL - SUPER WILDCAT 2-4BBL) CODE LW OR LX

1966 MODEL IDENTIFICATION DATA

MODEL & BODY STYLE	CATALOGUING MODEL DESIGNATION	CYL.	WHL. BASE	PISTON DISPL. (CU. IN.)	AIR CLEANER IDENTIFICATION	ENGINE CODE	TAX-ABLE H. P.	WEIGHT	BORE & STROKE
SPECIAL									
43307 2 Dr. Coupe	3307 } 3300 } 3000 SPECIAL } A	V-6	115"	225	NONE	MH	33.748	3009	3.750 x 3.400
43335 4 Dr. Wagon (2-Seat)	3335	"	"	"		"	"	3296	"
43367 2 Dr. Conv.	3367	"	"	"		"	"	3092	"
43369 4 Dr. Sedan	3369	"	"	"		"	"	3046	"
43407 2 Dr. Coupe	3407 } 3400	V-8	115"	300 *	WILDCAT 310	ML	45.0	3091	3.750 x 3.400
43435 4 Dr. Wagon (2-Seat)	3435	"	"	" "	" "	"	"	3399	"
43467 2 Dr. Conv.	3467	"	"	" "	" "	"	"	3223	"
43469 4 Dr. Sedan	3469	"	"	" "	" "	"	"	3148	"
SPECIAL DELUXE									
43507 2 Dr. Coupe	3507 } 3500	V-6	115"	225	NONE	MH	33.748	3009	3.750 x 3.400
43517 2 Dr. Hardtop	3517	"	"	"		"	"	3038	"
43535 4 Dr. Wagon (2-Seat)	3535	"	"	"		"	"	3299	"
43569 4 Dr. Sedan	3569	"	"	"		"	"	3045	"
43607 2 Dr. Coupe	3607 } 3600	V-8	115"	300 *	WILDCAT 310	ML	45.0	3122	3.750 x 3.400
43617 2 Dr. Hardtop	3617	"	"	" "	" "	"	"	3142	"
43635 4 Dr. Wagon (2-Seat)	3635	"	"	" "	" "	"	"	3427	"
43669 4 Dr. Sedan	3669	"	"	" "	" "	"	"	3156	"
SKYLARK									
44307 2 Dr. Coupe	4307 } 4300 } 4000 SKYLARK } A	V-6	115"	225	NONE	MH	33.748	3034	3.750 x 3.400
44317 2 Dr. Hardtop	4317	"	"	"		"	"	3069	"
44339 4 Dr. Hardtop	4339	"	"	"		"	"	3172	"
44367 2 Dr. Conv.	4367	"	"	"		"	"	3158	"
44407 2 Dr. Coupe	4407 } 4400	V-8	115"	300 *	WILDCAT 310	ML	45.0	3145	3.750 x 3.400
44417 2 Dr. Hardtop	4417	"	"	" "	" "	"	"	3152	"
44439 4 Dr. Hardtop	4439	"	"	" "	" "	"	"	3285	"
44467 2 Dr. Conv.	4467	"	"	" "	" "	"	"	3259	"
SPORTWAGON									
44255 4 Dr. Wagon (2-Seat)	4255 } 4400	V-8	120"	340	WILDCAT 350 (2-BBL.)	MA	45.0	3713	3.750 x 3.850
44265 4 Dr. Wagon (3-Seat)	4265	"	"	"			"	3811	"
44455 4 Dr. Wagon (2-Seat)	4455	"	"	"	WILDCAT 375 (4-BBL.)	MB	"	3720	"
44465 4 Dr. Wagon (3-Seat)	4465	"	"	"			"	3844	"
SKYLARK GRAN SPORT									
44607 2 Dr. Coupe	4607 } 4600 } SKYLARK GRAN SPORT } A	V-8	115"	400 **	WILDCAT 445	MR	56.11	3479	4.1875 x 3.640
44617 2 Dr. Hardtop	4617	"	"	" "	" "	"	"	3428	"
44667 2 Dr. Conv.	4667	"	"	" "	" "	"	"	3532	"
LE SABRE									
45237 2 Dr. Hardtop	5237 } 5200 } 5000 LE SABRE } B	V-8	123"	340	WILDCAT 350 (2-BBL.)	MA	45.0	3751	3.750 x 3.850
45239 4 Dr. Hardtop	5239	"	"	"	WILDCAT 375 (4-BBL.)		"	3828	"
45269 4 Dr. Sedan	5269	"	"			MB	"	3796	"
LE SABRE CUSTOM									
45437 2 Dr. Hardtop	5437 } 5400	V-8	123"	340	WILDCAT 350 (2-BBL.)	MA	45.0	3746	3.750 x 3.850
45439 4 Dr. Hardtop	5439	"	"	"			"	3824	"
45467 2 Dr. Conv.	5467	"	"	"	WILDCAT 375 (4-BBL.)	MB	"	3833	"
45469 4 Dr. Sedan	5469	"	"	"			"	3788	"
WILDCAT									
46437 2 Dr. Hardtop	6437 } 6400 } 6000 WILDCAT } B	V-8	126"	401 **	WILDCAT 445	MT	56.11	4003	4.1875 x 3.640
46439 4 Dr. Hardtop	6439	"	"	" "	" "	"	"	4108	"
46467 2 Dr. Conv.	6467	"	"	" "	" "	"	"	4065	"
46469 4 Dr. Sedan	6469	"	"	" "	" "	"	"	4070	"
WILDCAT CUSTOM									
46637 2 Dr. Hardtop	6637 } 6600	V-8	126"	401 **	WILDCAT 445	MT	56.11	4018	4.1875 x 3.640
46639 4 Dr. Hardtop	6639	"	"	" "	" "	"	"	4176	"
46667 2 Dr. Conv.	6667	"	"	" "	" "	"	"	4079	"
ELECTRA 225									
48237 2 Dr. Hardtop	8237 } 8200 } 8000 ELECTRA } C	V-8	126"	401 **	WILDCAT 445	MT	56.11	4176	4.1875 x 3.640
48239 4 Dr. Hardtop	8239	"	"	" "	" "	"	"	4271	"
48269 4 Dr. Sedan	8269	"	"	" "	" "	"	"	4255	"
ELECTRA 225 CUSTOM									
48437 2 Dr. Hardtop	8437 } 8400	V-8	126"	401 **	WILDCAT 445	MT	56.11	4230	4.1875 x 3.640
48439 4 Dr. Hardtop	8439	"	"	" "	" "	"	"	4323	"
48467 2 Dr. Conv.	8467	"	"	" "	" "	"	"	4298	"
48469 4 Dr. Sedan	8469	"	"	" "	" "	"	"	4292	"
RIVIERA									
49487 2 Dr. Hardtop	9487 } 9000 } RIVIERA } E	V-8	119"	425	WILDCAT 465	MW	59.51	4180	4.3125 x 3.640

Please Note: The car model tag, or identification plate, will have the numeral "4" as a prefix to the series and body style. For cataloguing purposes this numeral "4" denoting Buick has been deleted and only the four numerals for series and body style are used.

For example: A 2-door coupe V-6 service part could be listed:

3307 - If the part is peculiar only to that model
3300 - If peculiar to all Special V-6
33-3400 - If common to Special V-6 and V-8
3000 - If common to Special and Special Deluxe

* 340 CU. IN. ENGINE OPTIONAL (WILDCAT 350 - WILDCAT 375)
** 425 CU. IN.

1967 MODEL IDENTIFICATION DATA

Model & Body Style	Cataloguing Model Designation			C Y L.	Whl. Base	Piston Displ. (cu. in.)	Valve Rocker Arm Cover Identification	Engine Code	Tax-able H.P.	Weight	Bore & Stroke
SPECIAL											
3307 2-Dr. Coupe	3307	3300	3000 Special	6	115	225	None	NH	33.748	3071	3.750 x 3.400
3335 4-Dr. 2 Seat Wagon	3335			6	115	225		NH		3343	
3369 4-Dr. Sedan	3369			6	115	225		NH		3077	
3407 2-Dr. Coupe	3407	3400		8	115	300	300-2	NL	45.0	3071	3.750 x 3.400
3417 2-Dr. Hardtop	3417			8	115	340	340-4	NB		—	3.750 x 3.850
3435 4 Dr. 2 Seat Wagon	3435			8	115	300	300-2	NL		3343	3.750 x 3.400
3469 4 Dr. Sedan	3469			8	115	300	300-2	NL		3077	
SPECIAL DELUXE											
3517 2-Dr. Hardtop	3517	3500		6	115	225	None	NH	33.748		3.750 x 3.400
3535 4-Dr. 2 Seat Wagon	3535			6	115	225		NH			
3569 4-Dr. Sedan	3569			6	115	225		NH			
3617 2-Dr. Hardtop	3617	3600		8	115	300	300-2	NL	45.0		3.750 x 3.400
3635 4-Dr. 2 Seat Wagon	3635			8	115	300		NL			
3669 4-Dr. Sedan	3669			8	115	300		NL			
SKYLARK											
4307 2-Dr. Coupe	4307	4300	4000 Skylark	6	115	225	None	NH	33.748	3373	3.750 x 3.400
4317 2-Dr. Hardtop	4317			6	115	225		NH			
4339 4-Dr. Hardtop	4339			6	115	225		NH			
4367 2-Dr. Conv.	4367			6	115	225		NH		3335	
4407 2-Dr. Coupe	4407	4400		8	115	300	300-2	NL	45.0	3137	3.750 x 3.400
4417 2-Dr. Hardtop	4417			8	115	300	340-2	NL	45.0	3199	3.750 x 3.850
4439 4-Dr. Hardtop	4439			8	115	340		NA		3373	
4467 2-Dr. Conv.	4467			8	115	300	340-4	NL	45.0	3335	3.750 x 3.850
4469 4-Dr. Sedan	4469			8	115	340	340-2			3324	
SPORT WAGONS											
4855 4-Dr. 2 Seat Wagon	4855	4800		8	120	340	340-2 or 340-2	NA or NB	45.0	3772	3.750 x 3.850
4865 4-Dr. 2 Seat Wagon	4865			8	120	340				3876	
4455 4-Dr. 2 Seat Wagon	4455	4400		8	120	340				3772	
4465 4-Dr. 3 Seat Wagon	4465			8	120	340				3876	
SKYLARK GRAN SPORT											
4607 2-Dr. Coupe	4607	4600	Skylark Gransport	8	115	400	400-4	NR		3439	4.040 x 3.900
4617 2-Dr. Hardtop	4617			8	115	400		NR		3500	
4667 2-Dr. Conv.	4667			8	115	400		NR		3505	
LE SABRE											
5287 2-Dr. Hardtop	5287	5200	5000-Le Sabre	8	123	340	340-2 or 340-4	NA or NB	45.0	3819	3.750 x 3.850
5239 4-Dr. Hardtop	5239			8	123	340				3878	3.750 x 3.850
5269 4-Dr. Sedan	5269			8	123	340				3847	
LE SABRE CUSTOM											
5487 2-Dr. Hardtop	5487	5400		8	123	340	340-2 or 340-4	NA or NB	45.0 45.0	3853	3.750 x 3.850
5439 4-Dr. Hardtop	5439			8	123	340				3873	
5467 2-Dr. Conv.	5467			8	123	340				3890	3.750 x 3.850
5469 4-Dr. Sedan	5469			8	123	340				3855	
WILDCAT											
6487 2-Dr. Hardtop	6487	6400	6000-Wildcat	8	126	430	430-4	ND	51.91	4021	4.1875 x 3.90
6439 4-Dr. Hardtop	6439			8	126	430		ND		4069	
6467 2-Dr. Conv.	6467			8	126	430		ND		4067	
6469 4-Dr. Sedan	6469			8	126	430		ND		4008	
WILDCAT CUSTOM											
6687 2-Dr. Hardtop	6687	6600		8	126	430	430-4	ND	51.91	4055	4.1875 x 3.90
6639 4-Dr. Hardtop	6639			8	126	430		ND		4119	
6667 2-Dr. Conv.	6667			8	126	430		ND		4046	
ELECTRA 225											
8257 2-Dr. Hardtop	8257	8200	8000-Electra-C	8	126	430	430-4	ND	51.91	4197	4.1875 x 3.90
8239 4-Dr. Hardtop	8239			8	126	430		ND		4293	
8269 4-Dr. Sedan	8269			8	126	430		ND		4246	
ELECTRA 225 CUSTOM											
8457 2-Dr. Hardtop	8457	8400		8	126	430	430-4	ND	51.91	4242	4.1875 x 3.90
8439 4-Dr. Hardtop	8439			8	126	430		ND		4336	
8467 2-Dr. Conv.	8467			8	126	430		ND		4304	
8469 4-Dr. Sedan	8469			8	126	430		ND		4312	
RIVIERA											
9487 2-Dr. Hardtop	9487		9000-Riviera-E	8	119	430	430-4	ND	51.91	4189	4.1875 x 3.90

A

B

NOTE: The car model tag or identification plate will have the numeral "4" as a prefix to the series and body style. For cataloguing purposes this numeral "4" denoting Buick has been deleted and only the four numerals for series and body style are used.

EXAMPLE: A 2 Door Coupe V-6 service part could be listed:

3307 - If the part is peculiar only to that model
3300 - If peculiar to all Special V-6
33-3400 - If common to Special V-6 and V-8
3000 - If common to Special and Special Deluxe

1968 MODEL IDENTIFICATION DATA

Model & Body Style	Cataloguing Model Designation			C Y L.	Whl. Base	Piston Displ. (Cu. In.)	Valve Rocker Arm Cover Identification	Eng. Code	Tax-able H.P.	Weight	Bore & Stroke
SPECIAL DLX.											
3327 2-Dr. Coupe	3327	Special	30-4000 or "A"	L-6	112	250	-	-	36.0	3125	3.875 x 3.530
3369 4-Dr. Sedan	3369			L-6	116	250	-	-	36.0	3217	3.875 x 3.530
3435 4-Dr. 2-Seat Wgn.	3435			V-8	116	350	350-2	PO	46.2	3670	3.800 x 3.500
SKYLARK											
3537 2-Dr. H.T.	3537	Skylark		L-6	112	250	-	-	36.0	3194	3.875 x 3.530
3569 4-Dr. Sedan	3569			L-6	116	250	-	-	36.0	3282	3.875 x 3.530
SKYLARK CUST.											
4437 2-Dr. H.T.	4437			V-8	112	350	350-2	PO	46.2	3344	3.800 x 3.500
4467 2-Dr. Conv.	4467			V-8	112	350	or	or	46.2	3394	or
4439 4-Dr. H.T.	4439			V-8	116	350	350-4	PP	46.2	3413	3.800 x 3.850
4469 4-Dr. Sedan	4469			V-8	116	350			46.2	3377	
SPORTWAGON'S											
4455 4-Dr. 2-Seat Wgn.	4455			V-8	121	350	350-2	PO	46.2	3975	3.800 x 3.500
4465 4-Dr. 3-Seat Wgn.	4465			V-8	121	or	or	or	46.2	4118	or
4855 4-Dr. 2-Seat Wgn.	4855*			V-8	121	400 option	350-4	PP	46.2	3975	3.800 x 3.8500
4865 4-Dr. 3-Seat Wgn.	4865*			V-8	121		or		46.2	4118	4.040 x 3.900
							400-4		48.8		
GS 350											
3437 2-Dr. H.T.	3437 - GS 350			V-8	112	350	350-4	PP	46.2	3375	3.800 x 3.850
GS 400											
4637 2-Dr. H.T.	4637	GS 400		V-8	112	400	400-4	PP	48.8	3514	4.040 x 3.900
4667 2-Dr. Conv.	4667			V-8	112	400	400-4	PP	48.8	3547	
LE SABRE											
5287 2-Dr. H.T.	5287	5200	5000	V-8	123	350	350-2	PO	46.2	3923	3.800 x 3.500
5239 4-Dr. H.T.	5239			V-8	123	350	or	or	46.2	3980	or
5269 4-Dr. Sedan	5269			V-8	123	350	350-4	PP	46.2	3946	3.800 x 3.850
LE SABRE CUSTOM											
5487 2-Dr. H.T.	5487	5400		V-8	123	350	350-2	PO	46.2	3922	3.800 x 3.500
5439 4-Dr. H.T.	5439			V-8	123	or	or	or	46.2	4007	or
5467 2-Dr. Conv.	5467			V-8	123	430 option	350-4	PP	46.2	3966	3.800 x 3.850
5469 4-Dr. Sedan	5469			V-8	123		or	PD	46.2	3950	4.1875 x 3.900
							430-4		56.1	4125	
WILDCAT			"B"								
6487 2-Dr. H.T.	6487	6400	6000	V-8	126	430	430-4	PD	56.1	4125	4.1875 x 3.900
6439 4-Dr. H.T.	6439			V-8	126	430	430-4	PD	56.1	4171	4.1875 x 3.900
6469 4-Dr. Sedan	6469			V-8	126	430	430-4	PD	56.1	4107	4.1875 x 3.900
WILDCAT CUSTOM											
6687 2-Dr. H.T.	6687	6600		V-8	126	430	430-4	PD	56.1	4134	4.1875 x 3.900
6639 4-Dr. H.T.	6639			V-8	126	430	430-4	PD	56.1	4253	4.1875 x 3.900
6667 2-Dr. Conv.	6667			V-8	126	430	430-4	PD	56.1	4122	4.1875 x 3.900
ELECTRA											
8257 2-Dr. H.T.	8257	8200	8000 or "C"	V-8	126	430	430-4	PD	56.1	4180	4.1875 x 3.900
8239 4-Dr. H.T.	8239			V-8	126	430	430-4	PD	56.1	4270	4.1875 x 3.900
8269 4-Dr. Sedan	8269			V-8	126	430	430-4	PD	56.1	4253	4.1875 x 3.900
ELECTRA CUSTOM											
8457 2-Dr. H.T.	8457	8400		V-8	126	430	430-4	PD	56.1	4223	4.1875 x 3.900
8439 4-Dr. H.T.	8439			V-8	126	430	430-4	PD	56.1	4314	4.1875 x 3.900
8467 2-Dr. Conv.	8467			V-8	126	430	430-4	PD	56.1	4285	4.1875 x 3.900
8469 4-Dr. Sedan	8469			V-8	126	430	430-4	PD	56.1	4307	4.1875 x 3.900
RIVIERA											
9487 2-Dr. H.T.	9487 - 9000 or "E"			V-8	119	430	430-4	PD	56.1	4222	4.1875 x 3.900

*Models Listed As 4855-65 Are Models 4455-65 with Wood grain Applique Option

⑤ ⑥

CHART			
PRODUCTION MONTH IDENTIFICATION		OPTION IDENTIFICATION	
MONTH	CODE LETTER	OPTION	CODE NO.
JANUARY	1	POWER BRAKES*	1
FEBRUARY	2	AIR CONDITIONING	2
MARCH	3	DUAL EXHAUST	3
APRIL	4	RADIO-SONOMATIC	4
MAY	5	RADIO-AM-FM-STEREO	5
JUNE	6	RADIO - AM-FM	6
JULY	7	POWER WINDOWS	7
AUGUST	8	POWER STEERING	8
SEPTEMBER	9	CLIMATE CONTROL	B
OCTOBER	O	CRUISE CONTROL	0
NOVEMBER	N		
DECEMBER	D		

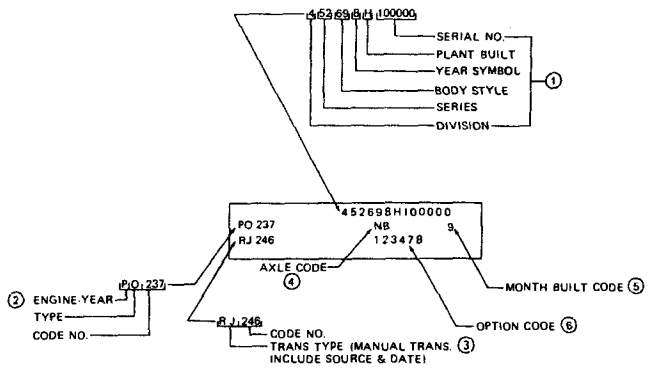

① ② ⑥ ④

1966 MODELS	ENGINE		TRANSMISSION		AXLE ASSEMBLY RATIO USAGE									TRAILER OPTION			
					STANDARD			ECONOMY			PERFORMANCE			NO. 1		NO. 2	
		CODE		CODE	RATIO	REG. CODE	LIMITED SLIP CODE	RATIO	REG. CODE	POS.TRACT CODE	RATIO	REG. CODE	POS.TRACT CODE	RATIO	POS.TRACT CODE	RATIO	POS.TRACT CODE
43327-69 43527-69	250 L-6	SA	3 Speed Manual	OP	3.23	LC	LP							3.91*	OZ	3.42	OO
		SE	2 Sp. Auto A/C	LC							3.42	OM	OO				
		SO	2 Sp. Auto	LC	2.93	LB	LW				3.23	LC	LP	3.91*	OZ	3.42	OO
44437-39-67-69 43327-69 43537-69	350 V-8	PO	3 Speed Manual	RJ	2.93	LB	LW									3.23	LP
		PO	2 Sp.Auto(2BBl.)	ME	2.56	LK	LT									2.73	LO
		PO	2 Sp.Auto(2BBL.AC)	ME	2.73	LL	LO				3.23	LC	LP	3.91*	OZ		
		PP	2 Sp.Auto(4BBL.)	ME				2.56	LK	LT							
43437		PO	3 Speed Manual	RJ	3.23	LC	LP				3.42	OM	OO			3.64	ON
		PP	4 Speed Manual	HE													
		PO	2 Speed Auto	ME													
43435		PO	3 Speed Manual	PJ	3.23	LC	LP							3.91*	OZ	3.64	OM
		PO	2 Speed Auto	ME	2.93	LB	LW	2.73	LL	LO	3.23	LC	LP				
44455-65 44855-65		PO	3 Speed Manual	RJ	3.23	MG	MT	2.93	MA	MX	3.42	MK	MO	3.91*	MZ	3.64	MY
		PO	2 Speed Auto	MH													
44855-65	400 V-8	PR	3 Speed Auto	BW													
44637-67		PP	3 Speed Manual	RJ	3.42	OH	OO				3.64		ON				
		PR	4 Speed Manual	ME										3.91*	OZ		
		PR	3 Speed Auto	BW	2.93	OE	OX				3.42	OH	OO			3.64	ON
45287-39-69 45487-39-67-69	350 V-8	PO	3 Speed Manual	RJ	3.23	NB	NT							3.64	NY	3.42	NN
		PO	2 Speed Auto	ME	2.93	NJ	NX	2.73	NK	NO	3.23	NB	NT				
		PP	3 Speed Auto	BU													
46487-39-69 46687-39-69	430 V-8	PO	3 Speed Manual	DB	3.07	PG	PV										
								2.78	PL	PO	3.42		PW				
		PD	3 Speed Auto	BT							3.23	PM					
48257-39-69 48457-39-69		PD	3 Speed Auto	8T	2.78	PL	PO	2.56	PB	PN				3.91*	PX	3.07	PV
											3.23	PH	PR				
49487		PD	3 Speed Auto	8T	3.07	PJ	PM				3.42		PY	3.91*	PZ		
											3.23	PE					
49487 SS					3.42		PY										

*NOT AVAILABLE WITH AIR CONDITIONING

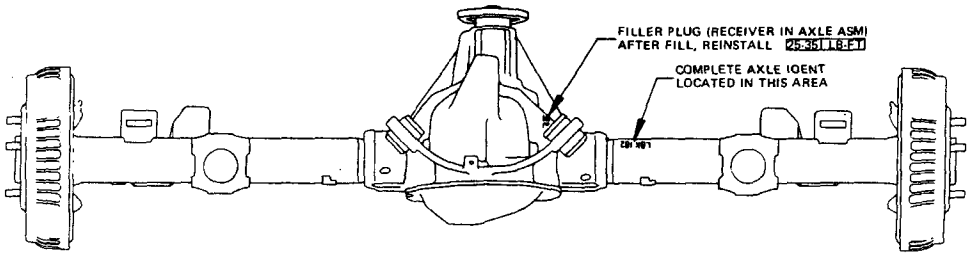

1969 MODEL IDENTIFICATION DATA

Model & Body Style	Cataloguing Model Designation			CYL	Whl. Base	Pist. Displ. (Cu. In.)	Air Cleaner Identification	Eng. Code	Taxable H.P.	Weight	Bore & Stroke
SPECIAL DLX.											
3327 2-Dr. Coupe	3327	Special	30-4000 or "A"	L-6	112	250	-		36.00	3126	3.875 x 3.530
3369 4-Dr. Sedan	3369			L-6	116	250	-		36.00	3182	3.875 x 3.530
3435 2-Seat Wgn.	3435			V-8	116	350	350-2	RO	46.2	3736	3.800 x 3.500
3436 2-Seat Wgn.	3436			V-8	116	350	350-2	RO	46.2	3783	3.800 x 3.500
SKYLARK											
3537 2-Dr. H.T.	3537	Skylark		L-6	112	250				3179	3.875 x 3.530
3569 4-Dr. Sedan	3569			L-6	116	250				3209	3.875 x 3.530
SKYLARK CUST.											
4437 2-Dr. H.T.	4437			V-8	112	350	350-2	RO	46.2	3341	3.800 x 3.500
4467 2-Dr. Conv.	4467			V-8	112	350	or	or	or	3477	or
4439 4-Dr. H.T.	4439			V-8	116	350				3398	
4469 4-Dr. Sedan	4469			V-8	116	350	350-4	RP	52.23	3397	3.800 x 3.850
SPORT WAGONS						350 or 400	350-2 or 350-4 or 400-4	RO RP RR	46.2 or 52.23	4106 4231	3.800 x 3.500 or 3.800 x 3.850 or 4.040 x 3.900
4456 2-Seat Wgn.	4456			V-8	121						
4466 3-Seat Wgn.	4466			V-8	121						
GS 350											
3437 2-Dr. H.T.	3437	GS-350		V-8	112	350	350-4	RP	46.2	3406	3.800 x 3.850
GS 400											
4637 2-Dr. H.T.	4637	GS-400		V-8	112	400	400-4	RR	52.23	3549	4.040 x 3.900
4667 2-Dr. Conv.	4667			V-8	112	400	400-4	RR	52.23	3594	
LeSABRE											
5237 2-Dr. H.T.	5237	5200	"B"	V-8	123	350	350-2	RO	46.2	3936	3.800 x 3.500
5239 4-Dr. H.T.	5239			V-8	123	350	or	or	or	3983	or
5269 4-Dr. Sedan	5269			V-8	123	350	350-4	RP	52.23	3966	3.800 x 3.850
LeSABRE CUST.		5000									
5437 2-Dr. H.T.	5437	5400		V-8	123	350	350-2	RO	46.2	4018	3.800 x 3.500
5439 4-Dr. H.T.	5439			V-8	123	or	or	or	or	4073	or
5467 2-Dr. Conv	5467			V-8	123	430 option	350-4		52.23	3958	3.800 x 3.850
5649 4-Dr. Sedon	5469			V-8	123		430-4	RD	56.1	3941	or 4.1875 x 3.900
WILDCAT											
6437 2-Dr. H.T.	6437	6400		V-8	123	430	430-4	RD	56.1	3926	4.1875 x 3.900
6439 4-Dr. H.T.	6439			V-8	123	430	430-4	RD	56.1	4204	4.1875 x 3.900
6469 4-Dr. Sedan	6469			V-8	123	430	430-4	RD	56.1	4102	4.1875 x 3.900
		6000									
WILDCAT CUST.											
6637 2-Dr. H.T.	6637	6600		V-8	123	430	430-4	RD	56.1	4134	4.1875 x 3.900
6639 4-Dr. H.T.	6639			V-8	123	430	430-4	RD	56.1	4220	4.1875 x 3.900
6667 2-Dr. Conv	6667			V-8	123	430	430-4	RD	56.1	4152	4.1875 x 3.900
ELECTRA											
8257 2-Dr. H.T.	8257	8200	8000 or "C"	V-8	126	430	430-4	RD	56.1	4294	4.1875 x 3.900
8239 4-Dr. H.T.	8239			V-8	126	430	430-4	RD	56.1	4203	4.1875 x 3.900
8269 4-Dr. Sedan	8269			V-8	126	430	430-4	RD	56.1	4238	4.1875 x 3.900
ELECTRA CUST.											
8457 2-Dr. H.T.	8457	8400		V-8	126	430	430-4	RD	56.1	4328	4.1875 x 3.900
8439 4-Dr. H.T.	8439			V-8	126	430	430-4	RD	56.1	4222	4.1875 x 3.900
8467 2-Dr. Conv.	8467			V-8	126	430	430-4	RD	56.1	4309	4.1875 x 3.900
8469 4-Dr. Sedan	8469			V-8	126	430	430-4	RD	56.1	4281	4.1875 x 3.900
RIVIERA											
9487 2-Dr. H.T.	9487-9000 or "E"			V-8	119	430	430-4	RD	56.1	4199	4.1875 x 3.900

⑥ ⑥

CHART			
PRODUCTION MONTH IDENTIFICATION		OPTION IDENTIFICATION	
MONTH	CODE LETTER	OPTION	CODE NO.
JANUARY	1	POWER BRAKES	1
FEBRUARY	2	AIR CONDITIONING	2
MARCH	3	DUAL EXHAUST	3
APRIL	4	RADIO · SONOMATIC	4
MAY	5	RADIO · AM-FM · STEREO	5
JUNE	6	RADIO · AM-FM	6
JULY	7	POWER WINDOWS	7
AUGUST	8	POWER STEERING	8
SEPTEMBER	9	CLIMATE CONTROL	9
OCTOBER	O	CRUISE CONTROL	D
NOVEMBER	N		
DECEMBER	D		

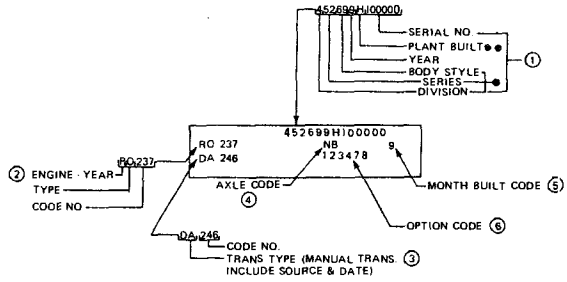

① ② ③ ④

1969 MODELS	ENGINE		TRANSMISSION		AXLE ASSEMBLY RATIO USAGE								
					STANDARD			ECONOMY			PERFORMANCE		
		CODE		CODE	RATIO	REGULAR CODE	LIMITED SLIP CODE	RATIO	REGULAR CODE	LIMITED SLIP CODE	RATIO	REGULAR CODE	LIMITED SLIP CODE
43327-69 43527-69	250 L-6	LA-LE	3 Speed Manual	QP	3.23	LC	LP						
		ME	ST-300 A/C	LC							3.42		00
		MA	ST-300		2.93	LB	LW				3.23		LP
43327-69 43537-69 45437-39-67-69	350 V-8	RO	3 Speed Manual	RJ	2.93	LB	LW						
		RO	ST-300-TH350 2BBL	JH	2.56	LK	LT						
		RO	Same & W/ A.C.		2.73	LL	LO				3.23		LP
		RP	ST-300-TH350 4BBL					2.56	LK	LT			
43437		RO	3 Speed Manual	RJ-DB									
		RP	4 Speed Manual	XO	3.23	LC	LP				3.42		00
		RP	ST-300	JH									
43435-36		RO	3 Speed Manual	RJ	3.23	LC	LP						
		RO	ST-300	JH	2.93	LB	LW	2.73	LL	LO	3.23		LP
44456-66 LESS DISC BRKS.	350 V-8	RO	3 Speed Manual	RJ		MG	MT						
		RO	TH-350	JJ				2.93	MA	MX	3.42		MO
		RR	TH-400	BW									
44456-66 WITH DISC BRKS.	400 V-8	RO	3 Speed Manual	RJ	3.23	MJ	MP	2.93	ME	MM	3.42		MS
		RO	TH-350	JJ									
		RR	TH-400	BW									
44637-67	400 V-8	RR	3 Speed Manual	DB	3.42	OH	OO				3.64		ON
		RR	4 Speed Manual	XO									
		RO	TH-400	BB	2.93	LB	LW				3.42		OO
45237-39-69 45437-39-67-69	350 V-8	RO	3 Speed Manual	DA	3.23	NB	NT						
		RO	ST-300	MG	2.93	NJ	NX	2.73	NK	NO	3.23		NT
		RP	TH-400	BU									
46437-39-69	430 V-8	RO	3 Speed Manual	DA	3.07	PG	PV						
46437-39-69		RO	TH-400	BC				2.78	PL	PO	3.23		PR
48257-39-69 48457-39-67-69		RO	TH-400	BC	2.78	PL	PO	2.56	PB	PN			
											3.23		PR
49487		RO	TH-400	BT	3.07	PJ	PM				3.42		PY
											3.23		
49487 GS					3.42		PY						

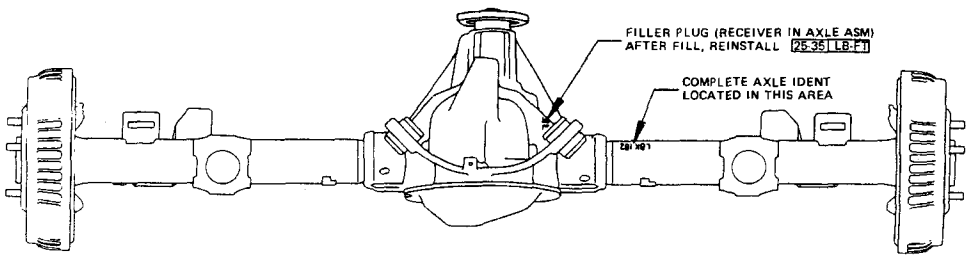

1970 MODEL IDENTIFICATION DATA

Model & Body Style	Cataloguing Model Designation			CYL	Whl. Base	Pist. Displ. (Cu. In.)	Air Cleaner Ident.	Eng. Code	Taxable H.P.	Bore & Stroke
SKYLARK										
3327 2-Dr. Coupe	3327	33-3500	30-4000 or "A"	L-6	112	250		-	36.0	3.875 x 3.530
3369 4-Dr. Sedan	3369			L-6	116	250		-	36.0	3.875 x 3.530
3537 2-Dr. H.T.	3537			L-6	112	250	350-2	-	46.2	3.800 x 3.850
3569 4-Dr. Sedan	3569			or V-8	116	or 350	350-4	SO	46.2	3.800 x 3.850
SKYLARK CUSTOM										
4437 2-Dr. H.T.	4437	4400		V-8	112	350	350-2 or 350-4	SO or SB	46.2 or 52.23	3.800 x 3.850
4467 2-Dr. Conv.	4467			V-8	112	350				3.800 x 3.850
4439 4-Dr. H.T.	4439			V-8	116	350				3.800 x 3.850
4469 4-Dr. Sedan	4469			V-8	116	350				3.800 x 3.850
GS										
3437 2-Dr. H.T.	3437			V-8	112	350	350-4	SP	52.23	
GS 455										
4637 2-Dr. H.T.	4637	4600		V-8	112	455	455-4	SR or SS	59.5	4.3125 x 3.900
4667 2-Dr. Conv.	4667			V-8	112	455	455-4		59.5	4.3125 x 3.900
SPORT WAGON										
3435 4-Dr. Wgn.	3435			V-8	116	350	350-2 or 350-4	SO or SB	46.2 or 52.23	3.800 x 3.850
3436 4-Dr. Wgn.	3436			V-8	116	350				3.800 x 3.850
LeSABRE										
5237 2-Dr. H.T.	5237	5200	5000 "B"	V-8	123	350	350-2 or 350-4	SO or SP	46.2 or 52.23	3.800 x 3.850
5239 4-Dr. H.T.	5239			V-8	123	350				3.800 x 3.850
5269 4-Dr. Sedan	5269			V-8	123	350				3.800 x 3.850
LeSABRE CUSTOM										
5437 2 Dr. H.T.	5437	5400		V-8	123	350	350-2 or 350-4	SO or SP	46.2 or 52.23	3.800 x 3.850
5439 4-Dr. H.T.	5439			V-8	123	350				3.800 x 3.850
5467 2-Dr. Conv.	5467			V-8	123	350				3.800 x 3.850
5469 4-Dr. Sedan	5469			V-8	123	350				3.800 x 3.850
LeSABRE 455										
6437 2-Dr. H.T.	6437	6400		V-8	123	455	455-4	SR or SF	59.5	4.3125 x 3.900
6439 4-Dr. H.T.	6439			V-8	123	455	455-4		59.5	4.3125 x 3.900
6469 4-Dr. Sedan	6469			V-8	123	455	455-4		59.5	4.3125 x 3.900
ESTATE WAGON										
6036 2-Seat Wgn.	6036		6000	V-8	123	455	455-4	SR or SF	59.5	4.3125 x 3.900
6046 3-Seat Wgn.	6046			V-8	123	455	455-4		59.5	4.3125 x 3.900
WILDCAT										
6637 2 Dr. H.T.	6637	6600		V-8	123	455	455-4	SR or SF	59.5	4.3125 x 3.900
6639 4-Dr. H.T.	6639			V-8	123	455	455-4		59.5	4.3125 x 3.900
6667 2-Dr. Conv.	6667			V-8	123	455	455-4		59.5	4.3125 x 3.900
ELECTRA										
8257 2-Dr. H.T.	8257	8200	8000 or "C"	V-8	126	455	455-4	SR or SF	59.5	4.3125 x 3.900
8239 4-Dr. H.T.	8239			V-8	126	455	455-4		59.5	4.3125 x 3.900
8269 4-Dr. Sedan	8269			V-8	126	455	455-4		59.5	4.3125 x 3.900
ELECTRA CUSTOM										
8457 2-Dr. H.T.	8457	8400		V-8	126	455	455-4	SR or SF	59.5	4.3125 x 3.900
8439 4-Dr. H.T.	8439			V-8	126	455	455-4		59.5	4.3125 x 3.900
8467 2-Dr. Conv.	8467			V-8	126	455	455-4		59.5	4.3125 x 3.900
8469 4-Dr. Sedan	8469			V-8	126	455	455-4		59.5	4.3125 x 3.900
RIVIERA										
9487 2-Dr. H.T.	9487	9000 or "E"		V-8	119	455	455-4	SR or SF	59.5	4.3125 x 3.900

⑤ ⑥

CHART			
PRODUCTION MONTH IDENTIFICATION		OPTION IDENTIFICATION	
MONTH	CODE LETTER	OPTION	CODE NO.
JANUARY	1	POWER BRAKES	1
FEBRUARY	2	AIR CONDITIONING	2
MARCH	3	DUAL EXHAUST	3
APRIL	4	RADIO-SONOMATIC	4
MAY	5	RADIO-AM-FM-STEREO	5
JUNE	6	RADIO - AM-FM	6
JULY	7	POWER WINDOWS	7
AUGUST	8	POWER STEERING	8
SEPTEMBER	9	CLIMATE CONTROL	9
OCTOBER	O	CRUISE CONTROL	0
NOVEMBER	N		
DECEMBER	D		

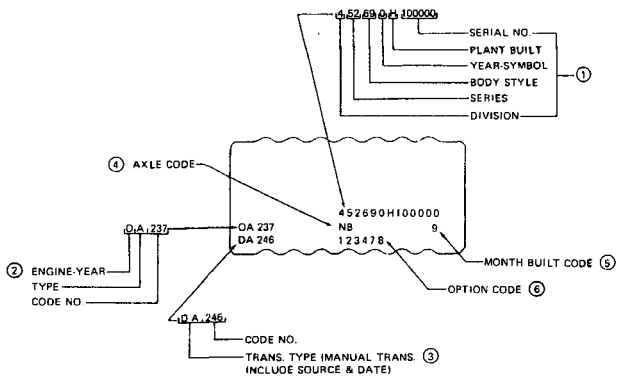

① ② ② ④

1970 MODELS	ENGINE		TRANSMISSION		AXLE ASSEMBLY RATIO USAGE									TRAILER OPTION					
					STANDARD			ECONOMY			PERFORMANCE			NO. 1		NO. 2		STANDARD	
		CODE		CODE	RATIO	REGULAR CODE	LIMITED SLIP CODE	RATIO	REGULAR CODE	LIMITED SLIP CODE	RATIO	REGULAR CODE	LIMITED SLIP CODE	RATIO	LIMITED SLIP CODE	RATIO	LIMITED SLIP CODE	RATIO	CODE
43327-69	250 L-6	SA	3 Speed Manual	RR	3.23	LC	LP				3.42		00	3.91*	OZ	3.42	00	3.42	OH
43537-69		SB	THM-350	JE	2.93	LB	LW				3.23		LP	3.91*	OZ	3.42	00	3.23	LC
43327-69 43537-69 43537-69 44437-67-39-69	350 V-8	OA	3 Speed Manual	RT	2.93	LB	LW				3.23		LP	3.91*	OZ	3.23	LP	3.23	LC
		OC	THM-350 (2BBL.)	JH	2.56	LK LL	LT									2.73*	LO	2.73	LL
		OE	THM-350 (4BBL.)	JR	2.73	LL	LO	2.56	LK	LT								3.23	LC
43437	350 V-8	OA	3 Speed Manual	RT							3.42		00			3.64	ON		
		OL	4 Speed Manual	KA	3.23	LC	LP												
		OC	THH-350 (4BBL.)	JR														3.23	LC
43435-36	350 V-8	OA	3 Speed Manual		3.23	LC	LP							3.91*	OZ	3.64	ON		
		OC	THM-350	JR	2.93	LB	LW	2.73	LL	LO	3.23		LP						
44637-67	455 V-8	OA	3 Speed Manual	RT	3.42	OH	00				3.64		ON	3.91*	OZ				
		OL	4 Speed Manual	KA															
		PC	THM-400	BA	2.93	LB	LW				3.42		00			3.64	ON		
GSX		PA	3 Speed Manual	RM	3.42		00												
		PE	4 Speed Manual	KA															
		PC	THM-400	BA															
44637-67 Stage 1		PE	3 Speed Manual	RM	*3.64		ON							3.91*	OZ				
			4 Speed Manual	KA															
		PF	THM-400	BB	3.42		00												
45237-39-69	350 V-8	OA	3 Speed Manual	DA	3.23	NB	NT												
45437-39-67-69		OC	THM-350 (2BBL.)	JJ	2.93	HJ	NX	2.73	NK	NO	3.23		NT	3.64	NY	3.42	NH	3.42	NC
		DE	THM-350 (4BBL.)																
46036-46	455 V-8	RE	3 Speed Manual	DA	2.78	PA	PT				3.23		PU					3.23	PC
		RA	THM-400	BC															
46437-39-69 46637-39-67		RE	3 Speed Manual	DA	2.78	PG	PV												
		RA	THM-400	BC				2.78	PL	PQ	3.23		PR	3.91	PX	3.42	PW		
48257-39-69 48457-39-69		RA	THM-400	BC	2.56	PB	PN				3.07		PV	3.91	PX	3.23	PR	3.23 2.78	PK PL
49487		RG	THM-400		3.07	PJ	PM				3.42		PY	3.91	PZ	3.23	PP	3.23	PF
49487GS					3.42		PY												

*NOT AVAILABLE WITH AIR CONDITIONING

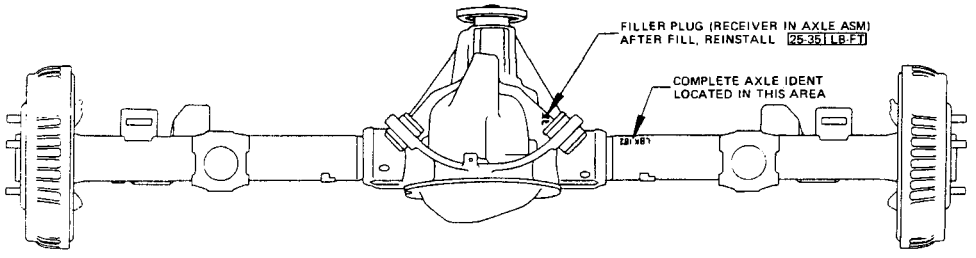

1971 MODEL IDENTIFICATION DATA

Model and Body Style	Cataloguing Model Designation			Cyl.	Whl. Base	Piston Displ. (Cu. In.)	Air Cleaner Ident.	Taxable H.P.	Weight (Std. Equip.)	Bore and Stroke
Skylark										
3327 - 2 Dr. Coupe	3327	3300	30-4000 or "A"	L-6	112	250			3144	
3327 - 2 Dr. HT.	3337			L-6	112	250			3163	
3369 - 4 Dr. Sedan	3369			L-6	116	250			3216	
Skylark Custom										
4437 - 2 Dr. HT.	4437	4400		V-8	112	350	350-2	46.2	3391	3.800 x 3.850
4467 - Conv.	4467			V-8	112	350	350-2	46.2	3431	3.800 x 3.850
4439 - 4 Dr. HT.	4439			V-8	116	350	350-2	46.2	3547	3.800 x 3.850
4469 - 4 Dr. Sedan	4469			V-8	116	350	350-2	46.2	3455	3.800 x 3.850
GS										
3437 - 2 Dr. HT.	3437	3400		V-8	112	350 or	350-4 or	46.2 or	3461	3.800 x 3.850 or
3467 - Conv.	3467			V-8	112	455	455-4	59.5	3497	4.3125 x 3.900
Sportwagon										
3436 - 2 Seat Wgn.	3436			V-8	116	350	350-2 or 350-4	46.2	3920	3.800 x 3.850
LeSabre										
5257 - 2 Dr. HT.	5257	5200	5000 "B"	V-8	124	350	350-2 or 350-4	46.2	4049	3.800 x 3.850
5239 - 4 Dr. HT.	5239			V-8	124	350		46.2	4109	3.800 x 3.850
5269 - 4 Dr. Sedan	5269			V-8	124	350		46.2	4078	3.800 x 3.850
LeSabre Custom										
5457 - 2 Dr. HT.	5457	5400		V-8	124	350 ar 455 option		46.2	4095	3.800 x 3.850
5467 - Conv.	5467			V-8	124			46.2	4086	3.800 x 3.850
5439 - 4 Dr. HT.	5439			V-8	124			46.2	4147	3.800 x 3.850
5469 - 4 Dr. Sedan	5469			V-8	124			59.5	4107	3.800 x 3.850 4.3125 x 3.900
Estate Wogon										
6035 - 2-Seat Wgn.	6035	6000		V-8	127	455	455-4	59.5	4906	4.3125 x 3.900
6045 - 3-Seat Wgn.	6045			V-8	127	455	455-4	59.5	4965	4.3125 x 3.900
Centurion										
6647 - 2 Dr. HT.	6657	6600	6000	V-8	124	455	455-4	59.5	4195	4.3125 x 3.900
6667 - Conv.	6667			V-8	124	455	455-4	59.5	4227	4.3125 x 3.900
6639 - 4 Dr. HT.	6639			V-8	124	455	455-4	59.5	4307	4.3125 x 3.900
Electra										
8237 - 2 Dr. HT.	8237	8200	8000 or "C"	V-8	127	455	455-4	59.5	4345	4.3125 x 3.900
8239 - 4 Dr. HT.	8239			V-8	127	455	455-4	59.5	4381	4.3125 x 3.900
Electra Custom										
8437 - 2 Dr. HT.	8437	8400		V-8	127	455	455-4	59.5	4359	4.3125 x 3.900
8439 - 4 Dr. HT.	8439			V-8	127	455	455-4	59.5	4421	4.3125 x 3.900
Riviera										
9487 - 2 Dr. HT.	9487	9000 or "E"		V-8	122	455	455-4	59.5	4325	4.3125 x 3.900

(9) (9)

CHART			
PRODUCTION MONTH IDENTIFICATION		OPTION IDENTIFICATION	
MONTH	CODE LETTER	OPTION	CODE NO.
JANUARY	1	POWER BRAKES	1
FEBRUARY	2	AIR CONDITIONING	2
MARCH	3	DUAL EXHAUST	3
APRIL	4	RADIO-SONOMATIC	4
MAY	5	RADIO-AM-FM-STEREO	5
JUNE	6	RADIO - AM-FM	6
JULY	7	POWER WINDOWS	7
AUGUST	8	POWER STEERING	8
SEPTEMBER	9	CLIMATE CONTROL	9
OCTOBER	O	TAPE PLAYER	0
NOVEMBER	N		
DECEMBER	D		

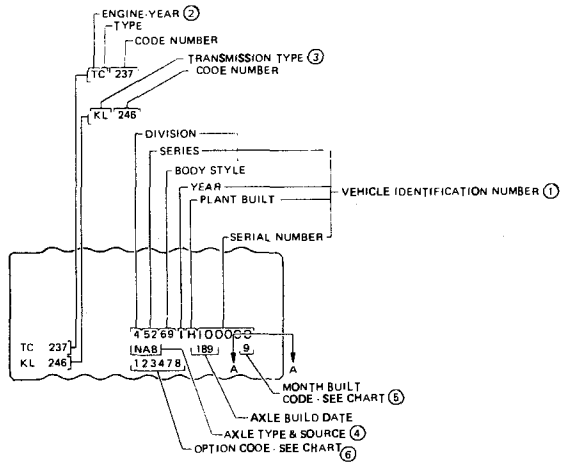

(1) (9) (9) (4)

1971 MODELS	ENGINE		TRANSMISSION		AXLE ASSEMBLY RATIO USAGE								
					STANDARD			ECONOMY			PERFORMANCE		
		CODE		CODE	RATIO	REGULAR CODE	LIMITED SLIP CODE	RATIO	REGULAR CODE	LIMITED SLIP CODE	RATIO	REGULAR CODE	LIMITED SLIP CODE
43327 43337 43369	250 L-6	DF	3 Speed Manual	R3	3.08	LAB	LSB						
		EA	THM-350	JE	3.08	LAB	LSB				3.42	LHB	LWB
43317 43337 43369 44437 44439 44469 44467	350	TO	3 Speed Manual	RA	3.08	LAB	LSB						
		TO	2 BBL. THM-350	LA	2.56	LKB	LTB				3.08	LAB	LSB
		TD	4 BBL. THM-350	MA	2.73	LLB	LOB	2.56	LKB	LTB			
43437-67	350	TB	3 & 4 Sp. Man.	RA-WY	3.08	LAB	LSB				3.42	LHB	LWB
		TD	THM-350	MA									
43436	350	TO-TB	3 Speed Manual	RA	3.08	LAB	LSB						
		TO-TB	THM-350	MA				2.73	LLB	LOB	3.42	LHB	LWB
43437-67	455	TR	4 Speed Manual	WY	3.42	LHB	LWB						
		TR	THM-400	BA	3.08	LAB	LSB				3.42	LHB	LWB
	455 GSX	TR	4 Speed Manual	WY	3.42		LWB						
		TR	THM-400	BA	3.42		LWB						
	455 Stg. 1	T5	4 Speed Manual	WY	3.42		LWB						
		T5	THM-400	BB									
Le Sabre	350	TC	THM-350	XL	3.08	NAB	NPB	2.73	NKB	NTB	3.42	NHB	NSB
						NAO			NKO			NHO	NSO
						NAC	NPC		NKC	NTC			
						NAK	NPK		NKK	NTK			
		TO	3 Speed Manual	DA	3.42	NHB	NSB					NHB	NSB
Le Sabre	455	TR	THM-400	BC	2.93	QIO	QJO				3.42	QTO	QAO
Es. Wagon	455	TR	THM-400	BC	2.93	QEO	QLO				3.42	QHO	QMO
		TR	3 Speed Manual	DA	3.42	OHO	QMO						
Centurion	455	TR-TA	THM-400	BT	2.93	QIO	QJO				3.42	QTO	QAO
		TR	3 Speed Manual	DA	3.42	QTO	QAO						
Electra	455	TR	THM-400	BT	2.73	QPO	QSO				2.93	QIO	QJO
Riviera	455	TR	THM-400	BT	2.93	QIO	QJO				3.42	QTO	QAO
Riviera GS		TA		BT	3.42		QAO						

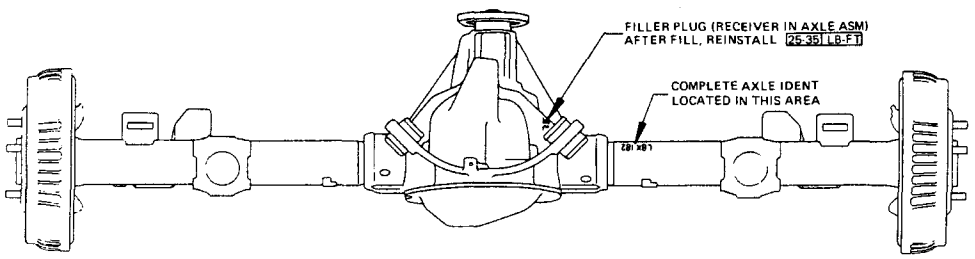

1972 MODEL IDENTIFICATION DATA

Sales Model & Body Style	Cataloguing Designation			Vehicle Ident. Number	Air Cleaner Ident.	Piston Displ. (Cu. In.)	Cyl.	Whl. Base (Inches)
Skylark								
3327 - 2 Dr. Coupe	3327	3300	30-4000 or "A"	4D27	350-2	350	V-8	112
3337 - 2 Dr. HT.	3337			4D37	or	350	V-8	112
3369 - 4 Dr. Sedan	3369			4D69	350-4	350	V-8	116
Skylark Custom								
4437 - 2 Dr. HT.	4437	4400		4H37	350-2	350	V-8	112
4467 - 2 Dr. Conv.	4467			4H67	or	350	V-8	112
4439 - 4 Dr. HT.	4439			4H39	350-4	350	V-8	116
4469 - 4 Dr. Sedan	4469			4H69		350	V-8	116
GS								
3437 - 2 Dr. HT.	3437			4G37	350-4 or	350*	V-8	112
3467 - 2 Dr. Conv.	3467			4G67	455-4	350*	V-8	112
Sportwagon								
3436 - 2-Seat Wgn.	3436			4F36	350-2 or 350-4	350	V-8	116
LeSabre								
5257 - 2 Dr. HT.	5257	5200	5000 "B"	4L57	350-2 or	350*	V-8	124
5239 - 4 Dr. HT.	5239			4L39	350-4 or	350*	V-8	124
5269 - 4 Dr. Sedan	5269			4L69	455-4	350*	V-8	124
LeSabre Custom								
5457 - 2 Dr. HT.	5457	5400		4N57	350-2 or	350*	V-8	124
5467 - 2 Dr. Conv.	5467			4N67	350-4 or	350*	V-8	124
5439 - 4 Dr. HT.	5439			4N39	455-4	350*	V-8	124
5469 - 4 Dr. Sedan	5469			4N69		350*	V-8	124
Estate Wagon								
6035 - 2-Seat Wgn.	6035			4R35	455-4	455	V-8	127
6045 - 3-Seat Wgn.	6045			4R45	455-4	455	V-8	127
Centurion			6000					
6647 - 2 Dr. HT.	6647	6600		4P47	455-4	455	V-8	124
6667 - 2 Dr. Conv.	6667			4P67	455-4	455	V-8	124
6639 - 4 Dr. HT.	6639			4P39	455-4	455	V-8	124
Electra								
8237 - 2 Dr. HT.	8237	8200	8000 or "C"	4U37	455-4	455	V-8	127
8239 - 4 Dr. HT.	8239			4U39	455-4	455	V-8	127
Electro Custom								
8437 - 2 Dr. HT.	8437	8400		4V37	455-4	455	V-8	127
8439 - 4 Dr. HT.	8439			4V39	455-4	455	V-8	127
Riviera								
9487 - 2 Dr. HT	9487	9000 or "E"		4Y87	455-4	455	V-8	122

*455 Eng. Available (Optional)

1972 VEHICLE IDENTIFICATION ENGINE—TRANSMISSION & REAR AXLE CHART

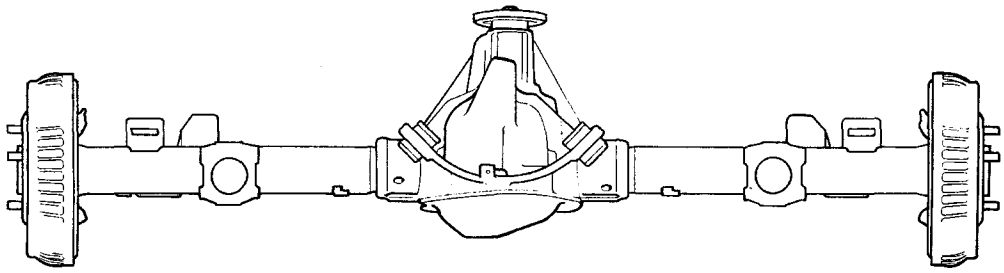

MODELS	ENG-INE	TRANSMISSION	AXLE ASSEMBLY RATIO USAGE								
			STANDARD			ECONOMY			PERFORMANCE		
			RATIO	REGULAR CODE	LIMITED SLIP CODE	RATIO	(G95) REG CODE	(G96) LTD. SLIP CODE	RATIO	(G92) REG CODE	(G91) LTD. SLIP CODE
4D27 4037 4069 4H37 4H39 4H69 4H67	350	3-SPEED MANUAL	3.08	LA	LS						
		2 BBL THM 350	2.56	LK	LT				3.08	LA	LS
		4 BBL THM 350	2.73	LL	LO	2.56	LK	LT			
4G37 4G67	350	3 & 4 SPEED MANUAL –THM 350	3.08	LA	LS				3.42	LH	LW
4F36	350	3-SPEED MANUAL –THM 350	3.08	LA	LS	2.73	LL	LO	3.42	LH	LW
4G37 4G67	455	4-SPEED MANUAL	3.42	LH	LW						
		THM-400	3.08	LA	LS				3.42	LH	LW
	455 GSX	4-SP MAN & THM 400	3.42		LW						
	Stage 1	4-SPEED MANUAL –THM 400	3.42		LW						
BL - BN	350	THM-350 [1]	3.08	NAB	NP	2.73	NK		3.42	NHB	NSB
				NAC	NP		NK				
BL - BN	455	THM-400							3.42	QT	OA
			2.93	QI	QJ						
BR	455	THM-400	2.93	QE	QL				3.42	QH	QM
BP	455	THM-400	2.93	QI	QJ				3.42	QT	OA
CT - CV	455	THM-400							2.93	QI	QJ
			2.73	QP	QS						
EY	455	THM-400	2.93	QI	QJ				3.42	QT	OA
RIVIERA GS			3.42		OA						
LE SABRE OR CEN-TURION	350 455	THM 350 THM 400	2.93	QW	QY						

1961 INTERIOR TRIM COLORS AND CODES

MODELS	MATERIAL	GREEN	BLUE	GRAY	FAWN	LIGHT SADDLE	TUR-QUOISE	RED	MAROON	BLACK & RED	BLACK	CREAM
4019	CLOTH & VINYL	001	011	021	031							
4027	CLOTH & VINYL	001	011	021	031							
4035	VINYL	005	015	025	035			065				
4045	VINYL	005	015	025	035			065				
4119	CLOTH & VINYL	101	111	121	131		151			181		
4135	VINYL	105	115	125	135		155	165				
4317	CLOTH & VINYL		113	123	133							
*4317	CLOTH & VINYL		117	127	137							
4411	CLOTH & VINYL	401	411	421	431					481		
4435	VINYL	405	415		435		455	465				
4435	CLOTH & VINYL	406	416		436		456	466				
*4435	LEATHER & VINYL					443						
4437	CLOTH & VINYL	401	411	421	431					481		
4439	CLOTH & VINYL	401	411	421	431					481		
4445	VINYL	405	415		435		455	465				
4467	VINYL	400	410		430			460				490
4469	CLOTH & VINYL	401	411	421	431					481		
4637	CLOTH & VINYL	601	611	621	631		651		661			
*4637	VINYL		617		637				667			
4639	CLOTH & VINYL	601	611	621	631		651		661			
4639	LEATHER & VINYL					643		663			683	
4667	VINYL	600	610		630		650	660				690
4719	CLOTH & VINYL	702	712	722	732		752		762			
4737	CLOTH & VINYL	702	712	722	732		752		762			
4739	CLOTH & VINYL	702	712	722	732		752		762			
4829	CLOTH & VINYL	801	811	821	831		851					
4867	LEATHER & VINYL		810	820	830		850	860				
4867	LEATHER & VINYL		819	829	839			869				

* Denotes Bucket-Type Front Seats.

1962 INTERIOR TRIM COLORS AND CODES

MODELS	MATERIAL	GREEN	BLUE	SILVER	WHITE	FAWN	GOLD	AQUA	ROSE	RED	BLACK	SADDLE
4019	CLOTH & VINYL	001	011	021		031						
	VINYL			024								
4027	CLOTH & VINYL	001	011	021		031						
4035	VINYL		015	025		035				075		
4045	VINYL		015	025		035				075		
4067	VINYL		010			030				070		
	* VINYL									079-BX400*		
4119	CLOTH & VINYL	101	111	121		131			161			
4135	VINYL	105	115	125		135				175		
4347	CLOTH & VINYL		113	123		133-138*	143		163			
	* VINYL		118		126					178	188	
4367	* VINYL		117		127					177	187	197
4411	CLOTH & VINYL		411	421		431						
	VINYL										484	
4439	CLOTH & VINYL		411	421		431		451	461			
4447	CLOTH & VINYL		411	421		431		451	461			
4469	CLOTH & VINYL		411	421		431		451	461			
	VINYL										484	
4635	VINYL	605	615			635		655		675		
	CLOTH & VINYL		616			636				676		
	* VINYL	603	613			633		653		673		
4639	CLOTH & VINYL	602	611 612	622		631 632		651	661			
	*LEATHER & VINYL									677	687	697
4645	VINYL	605	615			635		655		675		
	* VINYL	603	613			633		653		673		
4647	* VINYL		618		628	638				678		
4667	VINYL		614			634	644	654	664	674		
	* VINYL				624	639				679		
4819	CLOTH & VINYL	803	813	823		833						
4829	CLOTH & VINYL	801	811	821		831						
4839	CLOTH & VINYL	802	812	822		832	842		862			
4847	CLOTH & VINYL	803	813	823		833						
	*LEATHER & VINYL				826					878		898
	Code U7 — Power Windows — Required with these Trims											
4867	LEATHER & VINYL		810				840		860	870	880	890
	*LEATHER & VINYL		819		827					879		899

*Denotes Bucket-Type Front Seats

**BX-400 Red Trim 4167 - Use Seat Trim Parts 4167 Trim 179 - Side Panel Parts 4067 Trim 079

* Denotes Bucket Seats
@ Power Windows (U7) Required with these Custom Trims
# Denotes Police Option

1963 INTERIOR TRIM COLORS & CODES

Models	Materials	Aqua	Black	Blue	Red	Red and Black	Rose	Sandle-wood	Saddle	Silver	White
4019	CLOTH & VINYL	051		011		071		031			
	VINYL		085#	016	076			036			
4027	CLOTH & VINYL	051		011		071		031			
	VINYL				079*			039*			
4035	VINYL	055	085	015	075-079*			035-039*			
4045	VINYL	055	085	015	075			035			
4067	VINYL		080	010	070-079*			030-039*			
4119	CLOTH & VINYL	151		111		171	161	131			
4135	VINYL	155	185	115	175			135	195		
4347	CLOTH & VINYL	157*		117*			167*	137*			
	VINYL		188*		178*				198*		148*
4367	VINYL		189*	119*	179*			139*	199*		149*
4411	CLOTH & VINYL	451		411	471			431			
4435-4445	VINYL	455	485	415	475			435	495		
4439-4447	CLOTH & VINYL	452		412		472	462	432			
	VINYL			416	476			436			
4467	VINYL			410	470-479*		460	430-439*	490		
4469	CLOTH & VINYL	451		411		471	461	431			
4469	VINYL	Black & Silver Trim 484									
4635	CLOTH & VINYL			615			665	635			
	VINYL		687*		677*			637*	697*		
4639	VINYL		681-688*		671-678*			631-638*	691-698*		
4647-4667	VINYL		689*	619*	679*				699*		649*
4747	CLOTH & VINYL		787*	717*				737*			
	LEATHER & VINYL		788*	718*	778*				798*	728*	748*
	VINYL			716*				736*		726*	
4819	CLOTH & VINYL	851		811				831		821	
4829	CLOTH & VINYL	851-856@		811-816@				831-836@		821-826@	
4839	CLOTH & VINYL	851-856@		811-816@				831-836@		821-826@	
	LEATHER & VINYL		888*@		878*@				898*@		
4847	CLOTH & VINYL	851		811				831		821	
	LEATHER & VINYL		888*@		878*@				898*@		
4867	LEATHER & VINYL		880-889*	810	870-879*			830	899*		849*

*Denotes Bucket Seats.

1964 INTERIOR TRIM COLORS & CODES

POLICE OPT.

Models	Materials	Black	Blue	Fawn	Green	Maroon	Red	Saddle	Silver	White
4027	CLOTH & VINYL		901	003					002	
4035	VINYL	028	021				027	029		
4067	VINYL	028	021	023			027-087*			084*
4069	CLOTH & VINYL	092#	001	003					002	
	VINYL		011	013						
4127	CLOTH & VINYL		101	103	100				102	
	VINYL						197*			194*
4135	VINYL	128	121				127	129		
4169	CLOTH & VINYL		101	103	100				102	
	VINYL		111	113		117				
4255-4265	VINYL	028	021				027	029		
4337	CLOTH & VINYL		131	133						
	VINYL	158*	151*		150*		157*	159*		154*
4355	VINYL		171		170	177		179		174-184
4365	VINYL		171		170	177		179		174
4367	VINYL	168*	141		160*		147-167*	169*		164*
4369	CLOTH & VINYL		131	133	130	137				
	VINYL	148						149		
4439	CLOTH & VINYL		401-411	403-413	400	417			402	
	VINYL		421	423		427				
4447	CLOTH & VINYL		401	403	400					
	VINYL		421-471*	423-473*		427-477*				
4467	VINYL	448	441	443			447-487*	489*		484*
4469	CLOTH & VINYL		401-411	403-413	400	417			402	
4635-4645	CLOTH & VINYL		461	463		467				
	VINYL	438	431	433		437		439		
4639	CLOTH & VINYL		401-411	403-413	400	417			402	
	VINYL	688-658*	421	423		427	687	689-659*		
4647	CLOTH & VINYL		401	403	400					
	VINYL	698*	421	423-473*		427-477*	697*	699*		694*
			471*-691*							
4667	VINYL	448-698*	441- 691*	443			447	489*-699*		484*-694*
							487*-697*			
4669	CLOTH & VINYL		401-411	403-413	400	417			402	
4747	CLOTH & VINYL		611*	613*	610*					
	VINYL	608*-628*	601*-621*	603*			607*	629*	602*	624*
4819	CLOTH & VINYL		631	633	630				632	
4829-4839	CLOTH & VINYL		631-641	633-643	630-640				632-642	
4847	CLOTH & VINYL		631	633					632	
	LEATHER & VINYL	678					677	679		
4867	LEATHER & VINYL	668-678*	661				667-677*	669-679*		674*

1965 INTERIOR TRIM COLORS AND CODES

Models	Materials	Aqua	Black	Blue	Fawn	Gray	Green	Ivory	Red	Saddle	Silver
33-3427	CLOTH & VINYL			001	003						002
33-3435	VINYL			021			020		027	029	
33-3467	VINYL		028-088*	021				024	027-087*	029	
33-3469	CLOTH & VINYL			001	003						002
	VINYL		118	111						119	
35-3635	VINYL			121			120		127	129	
35-3669	CLOTH & VINYL	106		101	103		100				
	VINYL		118	111						119	
4200	VINYL			021			020		027	029	
43-4427	CLOTH & VINYL		108	101	103						
	VINYL		198*	191*					197*	199*	
43-4437	CLOTH & VINYL		138-188	131	133						
	VINYL			151*				154*	157*	159*	
43-4467	VINYL		148-158*	141				154*	147-157*	159*	
43-4469	CLOTH & VINYL	136	138	131	133		130				
	VINYL		148							149	
4455-65	VINYL			171			140		147	149	
5237-39-69	CLOTH & VINYL			401	403		400				402
5437	VINYL		428-478*	421					427	429	
5439	CLOTH & VINYL	416	418	411	413						
	VINYL			421						429	
5467	VINYL		448-488*	441					447-487*	449	
5469	CLOTH & VINYL		418	411	413						
	VINYL			421						429	
6237-39-69	CLOTH & VINYL			401	403		400				402
6437	VINYL		428-478*	421					427	429	
6439	CLOTH & VINYL	416	418	411	413						
	VINYL			421						429	
6467	VINYL		448-488*	441					447-487*	449	
6469	CLOTH & VINYL	416	418	411	413						
	VINYL			421						429	
6637	VINYL		658-678*	671*				674*		679*	
6639	VINYL		658	651			654-674*		657	659	
6667	VINYL		658-678*	671*				674*	677*	679*	
8237-39-69	CLOTH & VINYL	636		631	633		654-674*				632
8437	VINYL		698				690			699	
8439	CLOTH & VINYL			641	643	642	640				
	VINYL		698							699	
8467	VINYL		698-688*	691				694	697	699-689*	
8469	CLOTH & VINYL			641	643	642	640				
9447	CLOTH & VINYL		618*	611*	613*		610*				
	VINYL		608*-628	601*			620*	624*		609-629*	

*Denotes Bucket Seats

1966 INTERIOR TRIM COLORS AND CODES

Models	Material	Aqua	Black	Blue	Light Fawn	Fawn	Green	Plum	Red	Saddle	Slate	White	Bronze
33-3407	CLOTH & VINYL		108										
	VINYL		118	111	113								
33-3435	VINYL			111	113				117				
33-3467	VINYL		118	111	113				117				
33-3469	CLOTH & VINYL		108	101		103							
	VINYL	126	128	121									
35-3607	VINYL	166#	138-168#	131-161#	133-163#				167#				
35-3617	VINYL	166#	138-168#	131-161#	133-163#				167#				
35-3635	VINYL		138	131					137	139			
35-3669	CLOTH & VINYL	146		141		143							
	VINYL	126	128	121									
43-4407	CLOTH & VINYL		188	181		183							
	VINYL	166#	168#-198*	161#-191*	163#-193*				167#				
43-4417	CLOTH & VINYL		188	181		183							
	VINYL	166#	168#-198*	161#-191*	163#-193*				167#				
43-4467	VINYL		168#-198*	161#-191*	193*				167#-197*				
	VINYL		185		182								
43-4439	CLOTH & VINYL	156#		151#		153#	150#						
	VINYL		168#	161#	163#								
4255-65	VINYL			131	133				137				
4455-65	VINYL		178	171			170		177	179			
4607-17	VINYL	166#	168#-198*	161#-191*	163#-193*				167#				
4667	VINYL		168#-198*	161#-191*	193*				167#-197*				
5200	CLOTH & VINYL		408	401		403	400						
5437	VINYL	426	428-478*	421					427	429			
5439	CLOTH & VINYL	416		411		413			417				
	VINYL		428	421									
5467	VINYL		428-478*	421	423				427				
5469	CLOTH & VINYL	416		411		413			417				
	VINYL		428	421									
6437	VINYL	426	428-478*	421					427	429			
6439	CLOTH & VINYL	416		411		413			417				
	VINYL		428	421									
6467	VINYL		428-478*	421	423				427				
6469	CLOTH & VINYL	416		411		413			417				
	VINYL		428	421									
6637	VINYL		458#-498*	451#	453#-493*								
6639	VINYL	456#	458#	451#	453#								
6667	VINYL		458#-498*	451#	493*				457#				
8200	CLOTH & VINYL	636	678	631		633	630				632		
8437	VINYL		698#		693#				697#				
8439	CLOTH & VINYL			641		643	640				642		
	VINYL		698#		693#				697#				
8467	VINYL		698#-688*	691#	693#-683*				697#				
8469	CLOTH & VINYL		698#	641		643	640				642		
9487	VINYL BENCH		608S	601S	603S								
	VINYL BUCKET	656*C	658*C-668*S	651*C	653*C-663*S								
	CLOTH & VINYL STRATO BENCH		628C	621C				627C					
	VINYL STRATO BENCH		618C	611C			610C					614C	617C

# DENOTES NOTCH SEATS
* DENOTES BUCKET SEATS
C DENOTES CUST. TRIM
S DENOTES STANDARD TRIM

1967 INTERIOR TRIM COLORS AND CODES

Models	Material	Aqua	Black	Blue	Lt. Fawn	Green	Saddle	Maroon	Plum	Red	Ivory
33-3407	Cloth & Vinyl		108				103				
	Vinyl		118 -138c	111 -131c	114 -134c						
33-3435	Vinyl			111	114					117	
33-3469	Cloth & Vinyl		108	101			103				
	Vinyl		138	131	134						
35-3617	Cloth & Vinyl		188	181			183				
	Vinyl	166#	138 -168#	131 -161#	134 -164#						
35-3635	Vinyl		138	131			133				
35-3669	Cloth & Vinyl	146	148	141			143				
	Vinyl		138	131	134						
43-4407	Cloth & Vinyl		188	181			183				
	Vinyl	166#	168# -198*	161#-191*	164# -194*						
43-4417	Cloth & Vinyl		188	181			183				
	Vinyl	166#	168# -198*	161#-191*	164# -194*						
43-4439	Cloth & Vinyl		158#	151#			153#	157#			
	Vinyl		168#	161#	164#						
43-4467	Cloth & Vinyl		185		184						
	Vinyl		168# -198*	161#-191*			163#			167#-197*	
4455-65	Vinyl		178	171		170	173			177	
4855-65	Vinyl		178	171		170	173			177	
4607-17	Vinyl	196*	185# -198*	191*	184# -194*		193*				
4667	Vinyl		185# -198*	191*	184#		193*			197*	
5200	Cloth & Vinyl		408	401		400	403				
5487	Cloth & Vinyl			411			413				
	Vinyl	426	428 -478*	421			423				
5439	Cloth & Vinyl	416		411			413	417			
	Vinyl		428	421			423				
5467	Vinyl		428	421			423			427	
5469	Cloth & Vinyl	416		411			413	417			
	Vinyl		428	421			423				
6487	Cloth & Vinyl			411			413				
	Vinyl	426	428 -478*	421			423				
6439	Cloth & Vinyl	416		411			413	417			
	Vinyl		428	421			423				
6467	Vinyl		428	421			423			427	
6469	Cloth & Vinyl	416		411			413	417			
	Vinyl		428	421			423				
6687	Vinyl	456#	458# -498*	451#	454#						
6639	Vinyl	456#	458#	451#	454#						
6667	Vinyl		458# -498*	451#	454#					457#	
8200	Cloth & Vinyl	636	638	631			633				
	Vinyl		678		674						
8457-67	Vinyl		698# -688*	691#	694#		693#			697#	
8439-69	Cloth & Vinyl		648	641	644	640		647			
	Vinyl		698# -695c	691#	694#		693#				
9487	Vinyl Bench		608s		604s						
	Vinyl Bucket	656*c	668#s-658*c	651*c	664#s-		653*c				
	Cloth & Vinyl Strato Bench		628c		624c						
	Vinyl Strato Bench		618#			610c			619#c		612#c

- Denotes Notch Seats
* - Denotes Bucket Seats
c - Denotes Custom Trim
s - Denotes Standard Trim

1968 INTERIOR TRIM CODES

Models	Material	Black	Teal (Blue)	Green (PLATINUM)	Buckskin	Gold (Champagne)	Maroon	Parchment	Red	White (Ivory)
3327	Cloth & Vinyl	108				103				
	Vinyl	198	191					194		
3369	Cloth & Vinyl	108	101			103				
3435	Vinyl		111		113			114		
3437	Vinyl	118 -178*	111 -171*	170*	173*			114		172*
3537	Vinyl	118 -168#	111 -161#	160#				114		162#
3569	Cloth & Vinyl	128	121	120		123				
	Vinyl	118	111					114		
4437	Cloth & Vinyl	138	131							
	Vinyl	168#-178*	161#-171*	160#-170*	173*	133				162#-172*
4467	Vinyl	158 -178*	161#-171*	160#	163#				167#	152 -172*
4439	Cloth & Vinyl		141#	140#		143#	147#			
	Vinyl	168#								162#
4469	Cloth & Vinyl	138	131			133	137			
	Vinyl	158								
4455-65-4855-65	Vinyl	188	181	180	183				187	
4637	Vinyl	158 -178*	171*	170*	173*					152 -172*
4667	Vinyl	158 -178*	171*							152 -172*
5239-69-87	Cloth & Vinyl	408	401	400		403	407			
5487-6487	Cloth & Vinyl		411			413				
	Vinyl	428 -478*	421	420	423					
5439-6439	Cloth & Vinyl		411	410		413	417			
	Vinyl	428	421		423					
5467	Vinyl	428	421		423				427	
5469-6469	Cloth & Vinyl		411	410		413	417			
	Vinyl	428	421		423					
6687	Vinyl	458#-498*	451#	450#						452#
6639	Cloth & Vinyl	468#	461#							
	Vinyl	498*	451#	450#						452#
6667	Vinyl	458#-498*	451#						457#	452#
8239-57	Cloth & Vinyl	608	601			603				
	Vinyl	618						614		
8269	Cloth & Vinyl	608	601			603				
8439	Cloth & Vinyl	628 -658	621 -651	620		654	627			
	Vinyl	638#-668	631#		633#					
8457	Vinyl	638#	631#		633#				637#	
8467	Vinyl	638#-648*	631#		633#				637#	
8469	Cloth & Vinyl	628	621	620			627			
	Vinyl	638#	631#		633#					
9487	Vinyl Bench	675						672		
	Vinyl Bkt.	698 -678	691	690	693			674		
	Cloth & Vinyl Strato Bench	685				684				
	Vinyl Strato Bench	688		680	683					682

*Bucket Seats
#Notch Seats

1969 INTERIOR TRIM CODES

Models	Material	Black	Blue	Buckskin (Med. Fawn)	Burgandy (Red)	Green	Gold	Parchment (Sandlewood)	Pearl White
3327	Cloth & Vinyl	108		103					
	Vinyl	118	111					114	
3435-36	Vinyl		121	126					125
3369	Cloth & Vinyl	108	101	103					
	Vinyl	128	121					124	
3437	Vinyl	128-188*	121-188*	186*				124	185*
3537	Vinyl	128-178#	121-171#	176#		170#		124	175#
3569	Cloth & Vinyl	138	131	133		130			
	Vinyl	128	121					124	
4437	Cloth & Vinyl	148	141	143					
	Vinyl	178#-188*	171#-181*	176#-186*		170#			175#-185*
4439	Cloth & Vinyl		151#	153#	157#	150#			
	Vinyl	178#		176#					175#
4467	Vinyl	168-178#-188*	171#	176#	187*			164	185*
4469	Cloth & Vinyl		141	143	147	140			
	Vinyl	168		166					
4456-66	Vinyl		191	196	197	190			195
4637	Vinyl	168-188*		186*				164	185*
4667	Vinyl	168-188*			187*			164	185*
5200	Cloth & Vinyl	408	401	403	407	400			
5437-6437	Cloth & Vinyl		411	413		410			
	Vinyl	428-438*	421	426					425
5439-6439	Cloth & Vinyl		411	413		400			
	Vinyl	428	421	426		410			425
5469-6469	Cloth & Vinyl		411	413		410			
	Vinyl	428	421	426					425
5467	Vinyl	428	421	426	427				
6637	Vinyl	458#-478*	451#	453#					455#
6639	Cloth & Vinyl	468#						464#	
	Vinyl	458#	451#	453#					455#
6667	Vinyl	458#							
8200	Cloth & Vinyl	608	601	603					
	Vinyl	618						614	
8457	Cloth & Vinyl	648#	641#					644#	
	Vinyl	638#	631#	633#		630#			
8439	Cloth & Vinyl	628-648#	621-641#			620		624-644#	
	Vinyl	638#-639#-658#	631#-632#	633#-636#					
8467	Vinyl	638#	631#	633#-636#	637#				
8469	Cloth & Vinyl	628	621			620		624	
	Vinyl	638#-639#	631#-632#	633#-636#					
9000	Cloth & Vinyl	678#						674#	
	Vinyl (Bench)	669-688#	691#	686#	687#	680#		666*	685#
	Vinyl Bucket	668-698					692#	664#-694	

*Bucket Seats
#Notch Back Seats

1970 INTERIOR TRIM CODES

Models	Material	Black	Blue	Sandal-wood	Green	Pearl White	Red	Saddle	Burnished Saddle
3327	Cloth & Vinyl	108		104					
	Vinyl	118	111	114					
3369	Cloth & Vinyl	108	101	104					
	Vinyl	128	121	124					
3537	Vinyl	128-178#	121	124	170#	175#		176#	179#
3569	Cloth & Vinyl	138		134	130				
	Vinyl	128	121	124					
4437	Cloth & Vinyl	148	141	144					
	Vinyl	178#-188*	181*		170#	175#-185*		176#	179#-189*
4439	Cloth & Vinyl	148	141	144	140				
	Vinyl	178#			170#			176#	179#
4467	Vinyl	158-188*		154		175#-185*			179#-189*
4469	Cloth & Vinyl	148	141	144	140				
	Vinyl	158							159
3435-36	Vinyl		121	124					129
3437	Vinyl	128-178#-188*	121-181*	124	170#	175#-185*		176#	179#-189*
4637	Vinyl	128-178#-188*	121-181*	124	170#	175#-185*		176	179#-189*
4667	Vinyl	158-188*		154		175#-185*			179#-189*
5200	Cloth & Vinyl	408	401	404	400				
5437-39-69	Cloth & Vinyl		411	414	410				
6437-39	Vinyl	428	421		420			426	
5467	Vinyl	428	421				427	426	
6036-46	Vinyl		441-451#	444-454#	440-450#				449-459#
6637	Vinyl	468#-478*			460#	465#		466#	
6639	Cloth & Vinyl	438#		434#					
	Vinyl	468#			460#	465#	466#		
6667	Vinyl	468#				465#			
8200	Cloth & Vinyl	488	481	484					
	Vinyl	498		494					
8457	Vinyl	618#-628#-638#	631#	614#-624#-634#					619#-629#-649#
8439-69	Cloth & Vinyl	608-637	601-632	604-635	600				
	Vinyi	618#-628# 638-648#	631#	614#-624#-634#					619#-629#-639#
8467	Vinyl	618#		614#			617#		619#
9487	Cloth & Vinyl	678#		674#					679#
	Vinyl (Bench)	688#	681#	654-684#	650-680#			686#	659
	Vinyl Bucket	668#-698*				695*		666*	699*

*Bucket Seats
#Notch Back or 60-40 Seat

1971 TRIM COMBINATIONS

Models	Cloth Bench				Cloth Notch Back				Vinyl Bench					Vinyl Notch Back							Vinyl Buckets				
	Green	Blue	Sandalwood	Black	Green	Blue	Sandalwood	Black	Green	Blue	Sandalwood	Black	Saddle	Green	Blue	Sandalwood	Black	Rosewood	Pearl White	Saddle	Black	Sandalwood	Rosewood	Pearl White	Saddle
3327	110	111	114						100		104	108													
3337	110	111	114						100		104	108		150		154	158			156					
3369	110	111	114						100		104	108													
4437	140	141	144											150		154	158			156	168			165	166
4439	140	141	144											150		154	158			156					
4467											134	138		150					155	156					
4469	140	141	144								134	138													
3436									100	101	104														
3437									100		104	108		150		154	158			156	168			165	166
3467											134	138		150					155	156					
5257	400	401	404	408								418	416												
5239	400	401	404	408								418	416												
5269	400	401	404	408								418	416												
5457	420	421	424						430		434	438	436												
5439	420	421	424						430		434	438	436												
5467											434	438	436												
5469	420	421	424						430		434	438	436												
6035									440	441	444		446	450						456					
6045									440	441	444		446	450		454				456					
6647														460		464	468			466					
6639							462	463						460		464	468			466					
6667															461		468		465	466					
8237	480	481	484								494	498													
8239	480	481	484								494	498													
8437 Custom					610	611	614							620		624	628	627							
8439 Custom	600	601	604	608										620		624	628	627							
8437 Limited					*	*	*										*								
					640	641	644										642								
8439 Limited					*	*	*										*								
	630	631	632	633	640	641	644					648					642								
9487					670	671	674	678			654	658		680		684	688			686	668 698	664	697	695	

* Denotes 60-40 Seat

1972 TRIM COMBINATIONS

Models	Cloth Bench				Cloth Notch Back					Vinyl Bench						Vinyl Notch Back						Vinyl Buckets				
	Green	Blue	Covert	Black	Green	Blue	Covert	Saddle	Black	Green	Blue	Covert	White	Saddle	Black	Green	Covert Green	Covert	White	Saddle	Black	Covert	White	Saddle	Tan Black	Black
3327	110	111	114							100				106	108											
3337	110	111	114							100				106	108		133		135	136	138		135		137	138
3369	110	111	114							100				106	108					136	138					
4437	140	141	144														133		135	136	138		135		137	138
4439	140	141	144													130				136	138					
4467																130			135	136	138					
4469	140	141	144																	136	138					
3436										100	101	104		106												
3437										100				106	108		133		135	136	138		135		137	138
3467																130			135	136	138					
5257	400	401	404	408										416	418											
5239	400	401	404	408										416	418											
5269	400	401	404	408										416	418											
5457	420	421	424							430		434		436	438											
5439	420	421	424							430		434		436	438											
5467													435	436	438											
5469	420	421	424							430		434		436	438											
6035										440	441	444		446		450				456						
6045										440	441	444		446		450		454		456						
6647							464									470		474		476	478					
6639							464		468							470		474		476	478					
6667																470			475	476	478					
8237	480	481	484									494			498											
8239	480	481	484									494			498											
8437 Custom					600	601	604									620		624		626	628					
8439 Custom	600	601	604	608												620		624		626	628					
8437					*	*	*													*						
Limited					630	631	634													646						
8439					*	*	*													*						
Limited	630	631	634	638	630	631	634													646						
9487					*	*	*	*								*		*								
					670	671	674	676				654			658	680		684		684	688	654	685	686		658 688

* Denotes 60-40 Seat

1963 COLOR COMBINATION CHART

CODE	EXTERIOR COLORS	
	LUCITE COLOR	LUCITE NUMBER
A	Regal Black	885-94341
C	Arctic White	868-93774
D	Silver Cloud	867-95991
E	Spruce Green	867-96219
F	Marlin Blue	867-95999
J	Willow Mist	867-95996
N	Burgundy	867-96377
P	Teal Mist	867-95997
Q	Twilight Aqua	867-95998
R	Desert Sand	868-95186
S	Bronze Mist	867-96217
T	Fawn Mist	867-95995
V	Granada Red	868-95896
W	Diplomat Blue	867-96220
X	Rose Mist	867-95992

1964 COLOR COMBINATION CHART

A	Regal Black	868-96459
C	Arctic White	868-93774
D	Silver Cloud	867-95991
F	Marlin Blue	867-95999
H	Wedgewood Blue	868-96881
J	Surf Green	867-96882
K	Sunburst Yellow	868-96863
L	Claret Mist	4600 LM
N	Coral Mist	867-96884
P	Teal Mist	867-95997
R	Desert Beige	868-96809
S	Bronze Mist	867-96217
T	Tawny Mist	867-96810
V	Granada Red	868-95896
W	Diplomat Blue	867-96220

1965 Color Combination Chart

CODE	EXTERIOR COLORS	
	LUCITE COLOR	LUCITE NUMBER
A	Black C/O	868-96459
C	White C/O	868-93774
D	Blue	867-97219
E	Dark Blue	867-97220
H	Green	867-97223
J	Dark Green	867-97224
K	Turquoise	867-97217
L	Dark Turquoise	867-97218
N	Maroon	867-97213
R	Red	868-97540
S	Saddle	867-97215
T	Fawn	867-97216
V	Beige	868-96261
Y	Yellow	868-96908
Z	Silver C/O	867-95991

C/O DENOTES - CARRY-OVER FROM 1964

1966 Color Combination Chart

CODE	EXTERIOR COLORS	
	LUCITE COLOR	LUCITE NUMBER
A	Regal Black C/O	868-96459
B	Gunmetal	867-97211
C	Artic White C/O	868-93774
D	Astro Blue C/O	867-97219
E	Midnight Blue C/O	867-97220
F	Blue Mist	867-97589
G	Gold	867-97841
H	Seafoam Green C/O	867-97223
J	Verde Green C/O	867-97224
K	Turquoise Mist C/O	867-97217
L	Shadow Turquoise	867-97561
M	Riviera Red	867-97592
N	Burgundy Mist C/O	867-97213
R	Flame Red C/O	868-97540
S	Champagne	867-97692
T	Saddle Mist	867-97591
U	Plum	868-97843
V	Shell Beige C/O	867-96261
W	Silver Mist	867-97593
X	Riviera White	868-97686
Y	Cream	868-97594
Z	Riviera Silver Green	867-97842

C/O DENOTES - CARRY-OVER FROM 1965

1967 COLOR COMBINATION CHART

Code	EXTERIOR COLORS				
	Lucite Color	Du Pont Number	Ditzler Number (DDL)	Touch-Up Tubes Part No.	Spray Cans Part No.
A	Regal Black c/o	942-96459	9300	1050257	1050335
B	Riviera Turquoise	867-98415	43664	–	–
C	Arctic White c/o	868-93774	8259	1050266	1050334
D	Sapphire Blue	867-98142	13349		
E	Midnight Blue	943-98143	13346		
F	Blue Mist	867-98755	13364		1050479
G	Gold Mist	867-98370	22818		
H	Green Mist	867-98140	43651		
J	Verde Green	867-98356	43653	–	–
K	Aquamarine	867-98141	43661		
L	Shadow Turquoise	867-98268	43659		
N	Burgundy Mist c/o	867-97213	50700	1050280	
P	Platinum Mist	867-98267	32603	1050577	–
R	Apple Red	868-98138	71583		
S	Champagne Mist	867-98369	22813		1050615
T	Ivory	868-98139	81578		
U	Riviera Plum c/o	868-97843	50722	1050469	
V	Riviera Charcoal	867-98266	32604		
W	Riviera Fawn	867-98414	22821	–	–
X	Riviera Red	867-98413	71585	–	–
Z	Riviera Gold	867-98412	43665	–	–

1968 COLOR COMBINATION CHART

Code	EXTERIOR COLORS				
	Lucite Color	DuPont Number	Ditzler Number	Touch-Up Tubes Part No.	Spray Cans Part No.
A	Regal Black C/O	942-96459	9300	1050267	1050335
B	Midnight Teal	867-99187	13515		
C	Arctic White C/O	868-93774	8259	1050266	1050334
D	Blue Mist	867-98845	13512	1050707	1050696
E	Deep Blue Metallic	943-98878	13513	1050706	1050695
F	Teal Blue Mist	867-98880	13514	1050711	1050700
G	Ivory Gold Mist	867-98847	22942	1050709	1050698
K	Aqua Mist	867-98879	13517	1050708	1050697
L	Med. Teal Blue Mist	867-98881	13516	1050712	1050701
M	Burnished Saddle	867-99206	22967	1050717	
N	Maroon Metallic	867-99228	50775	1050705	1050694
P	Tarpon Green Mist	867-98876	43774	1050704	1050693
R	Scarlet Red	868-99130	71634	1050735	1050734
S	Olive Gold Metallic	867-99253	43794	1050719	
T	Desert Beige	868-98846	81617	1050710	1050699
V	Charcoal Metallic	867-98875	43773	1050703	1050692
W	Silver Beige Mist	867-99189	22962		
X	Buckskin	868-99287	22983		
Y	Cameo Cream	868-96908	81500	1050276	1050344
Z	Inca Silver Mist	867-98923	8596		

C/O Carry Over

1969 COLOR COMBINATION CHART

Fisher Code	Sales Code	EXTERIOR COLORS				
		Lucite Color	Dupont Number	Ditzler Number (DDL)	Touch-up Tubes Part No.	Spray Cans Part No.
10	A	Regal Black	926-96459	9300	1050267	1050335
40	Y	Cameo Yellow	926-96908	81500	1050276	1050344
50	C	Polar White	926-99642	2058	1050929	1050930
51	E	Twilight Blue	927-99339	2075	1050901	1050886
52	R	Signal Red	926-99331	2076	1050892	1050877
53	D	Crystal Blue	927-99338	2077	1050900	1050885
55	K	Turquoisemist	927-99337	2078	1050899	1050884
57	M	Verde Green	927-99410	2079	1050898	1050883
59	H	Limegreen	927-99335	2080	1050897	1050882
61	B	Burnished Brown	927-99334	2081	1050896	1050881
63	S	Champagnemist	927-98369	22813	1050895	1050880
65	G	Trumpet Gold	927-99333	2082	1050894	1050879
67	N	Burgundy Mist	927-97213	50700	1050893	1050878
69	P	Silver Mist	927-99480	2059	1050891	1050876
75	J	Embassy Gold	927-99358	2085	1050904	
77	Z	Antique Gold	927-99500	2086	1050902	
80	F	Azure Blue	926-99595	2096	1050918	
81	V	Sunset Silver	927-99596	2097	1050916	
82	T	Olive Beige	926-99597	2088	1050920	
83	L	Deep Gray Mist	927-99594	32526	1050917	
85	W	Copper Mist	927-97693	22663	1050919	

1970 COLOR COMBINATION CHART

SALES CODE	Fisher CODE	EXTERIOR COLORS				
		Paint Color	Dupont Number	Ditzler Number (DDL)	Touch-Up Tubes Part No.	Spray Cans Part No.
C	10	GLACIER WHITE	926-97686	8631	1051097	1051079
P	14	SILVER MIST	927-99480	2059	1050891	1050876
L	16	TEAL MIST GRAY	927-99942	2161	1051162	1051166
A	19	REGAL BLACK	926-96459	9300	1050267	1050335
F	20	AZURE BLUE	926-99922	2162	1051109	1051091
D	25	GULF STREAM BLUE	927-99750	2165	1051105	1051087
B	26	STRATOMIST BLUE	927-AF017	2213	1051111	1051093
E	28	DIPLOMAT BLUE	927-99752	2166	1051106	1051088
K	34	AQUA MIST	927-99731	2168	1051107	1051089
H	45	SEA MIST GREEN	927-99750	2171	1051103	1051085
T	46	EMERALD MIST	927-99943	2172	1051163	1051167
M	48	SHERWOOD GREEN	927-99728	2173	1051104	1051086
Y	50	BAMBOO CREAM	926-99749	2175	1051102	1051084
G	55	CORNET GOLD	927-99748	2178	1051100	1051082
Z	58	HARVEST GOLD	927-99729	2179	1051101	1051083
W	61	SANDPIPER BEIGE	926-99944	2181	1051164	1051168
S	63	DESERT GOLD	927-99921	2183	1051108	1051090
J	68	BURNISHED SADDLE	927-99206	2233	1050717	1050716
Q	—	SATURN YELLOW	926-AF232	—	—	—
R	75	FIRE RED	926-99730	2189	1051098	1051080
X	74	TITIAN RED		71642	1050772	1051187
V	76	SUNSET SAGE	927-99941	2190	1051161	1051165
N	78	MISTY BURGUNDY	927-97213	50700	1050893	1050898

1971 COLOR COMBINATION CHART

Sales Code	Fisher Code	EXTERIOR COLORS				
		Lucite Color	Dupont Number	Ditzler Number (DDL)	Touch-Up Tubes Part Number	Spray Cans Part Number
C	11	Artic White	926-99642	2058	1050929	1050930
P	13	Platinum Mist	927-AF112	2327	1051266	1051243
L	16	Tealmist Gray	927-99942	2161	1051162	1051166
A	19	Regal Black	926-96459	9300	1050267	1050335
D	24	Cascade Blue	927-AF156	2328	1051261	1051238
B	26	Stratomist Blue	927-AF017	2213	1051111	1051093
E	29	Nocturne Blue	927-AF157	2330	1051262	1051239
1	39	Twilight Turquoise	927-AF177	2331	1051269	1051246
Z	41	Silver Fern	927-AF174	2332	1051277	1051254
K	42	Willowmist Green	927-AF169	2333	1051264	1051241
H	43	Lime Mist	927-99846	2334	1051273	1051250
M	49	Verdemist Green	927-AF159	2337	1051263	1051240
Y	50	Bamboo Cream	926-99749	2175	1051102	1051084
O	53	Cortez Gold	927-AF175	2339	1051270	1051247
G	55	Cornet Gold	927-99748	2178	1051100	1051082
W	61	Sandpiper Beige	926-99944	2181	1051164	1051168
T	62	Bittersweet Mist	927-AF171	2340	1051271	1051248
S	65	Copper Mist	927-AF185	2343	1051281	1051258
U	67	Burnished Cinnamon	927-99768	2315	1051027	1051030
J	68	Deep Chestnut	927-AF176	2344	1051276	1051253
F	70	Pearl Beige	927-AF138	2346	1051279	1051256
V	73	Sunset Mist	927-AF184	2347	1051280	1051257
X	74	Vintage Red	927-AF162	2348	1051275	1051252
R	75	Fire Red	926-99730	2189	1051098	1051080
N	78	Rosewood	927-AF170	2350	1051265	1051242
—	—	—	—		1051287 Display Pkg.	1051292 Display Pkg.

1972 COLOR COMBINATION CHART

Sales Code	Fisher Code	EXTERIOR COLORS				
		Lucite Color	Dupont Number	Ditzler Number (DDL)	Touch-Up Tubes Part Number	Spray Cans Part Number
C	11	Arctic White	926-99642	2058	1050929	1050930
V	14	Silver Mist	927-AF394	2429	1051455	1051436
W	18	Charcoal Mist	927-AF395	2430	1051456	1051437
A	19	Regal Black	926-96459	9300	1050267	1050335
D	21	Crystal Blue	927-AF467	2431	1051468	1051449
T	24	Cascade Blue	927-AF156	2328	1051261	1051238
B	26	Stratomist Blue	927-AF017	2213	1051111	1051093
E	28	Royal Blue	927-99752	2166	1051106	1051088
H	36	Heritage Green	927-AF568	2433	1051473	1051454
F	43	Seamist Green	927-AF396	2435	1051457	1051438
G	45	Emerald Mist	927-99943	2172	1051163	1051167
1	48	Hunter Green	927-AF397	2439	1051458	1051439
J	50	Sandalwood	926-AF399	2441	1051459	1051440
Q	53	Cortez Gold	927-AF175	2339	1051270	1051247
S	54	Champagne Gold	927-AF400	2442	1051460	1051441
Y	56	Sunburst Yellow	926-AF472	2444	1051471	1051452
U	57	Antique Gold	927-AF466	2445	1051467	1051448
L	62	Sierra Tan	926-AF569	2447	1051472	1051453
M	63	Burnished Copper	927-AF402	2448	1051462	1051443
Z	65	Flame Orange	927-AF403	2450	1051463	1051444
K	67	Deep Chestnut	927-AF176	2344	1051276	1051253
N	69	Nutmeg	927-AF414	2452	1051466	1051447
X	73	Vintage Red	927-AF162	2348	1051280	1051257
R	75	Fire Red	926-99730	2189	1051098	1051080
P	77	Burnished Bronze	927-AF413	2454	1051465	1051446
					1051476 Display Pkg.	1051477 Display Pkg.

GM TELEGRAPHIC CODE

Telegraph regulations make it possible to specify actual part number digits at word cost. When ordering parts from General Motors points, wording can be decreased by using the GM Telegraphic Code. One five letter code can mean multiple words.

REFERENCE

Refer Order	XLGSG
Refer to our wire (of)	XLGSM
Refer to your wire (of)	XLGST
Refer to our letter (of)	XLGSP
Refer to your letter (of)	XLGGS
Refer to Parts Release and Change Notice No.	XLRDM
Refer to dealer service department bulletin	XLRDP

REPLY

Wire answer	XLGGO
Wire answer to our wire (of)	XLGSO
Check and advise by wire	XLGRG
Wire advise	XLGGD

ERRORS

Do not understand your telegram	XLPPC
Advise which is correct	XLOGT
Part number and description do not agree	XLPTT

SPECIFICATIONS & INSTRUCTIONS

Wire part number	XLPUG
No record part number	XLPCO
Advise car and engine no. for parts Order No.	XLPUM
Advise body style, trim, paint comb. numbers for parts, your order	XLPDC
URGENT-Car Inoperative	XLDST

CANCELLATION

Cancel our order of	XLGUS
Cancel following items our order	XLGUR
Cancelled as per your request	XLPRD
Material shipped; cannot cancel as requested	XLPOG

CHANGES—SUBSTITUTES—MISTAKES

Add to our order	XLGCG
Change shipping instructions on our order . . to read	XLOGR
Change our order . . to read as follows	XLOGP
Incorrect parts received on our order	XLOGU

SHIP OR SEND

Ship by air mail	XLGOU
Ship by air express	XLGOC
Ship by air freight	XLDMO
Ship by parcel post	XLGOT
Ship by parcel post special delivery	XLGDS
Ship express	XLGOG
Ship freight	XLGOM
Ship by truck (or transport)	XLGOR
Wire if unable to ship today	XLGPM
Material urgently required. Ship via quickest way today sure	XLDMR

SHIPPED OR SENT

Shipped today	XLMTS
Shipped by express	XLPSG
Shipped by freight	XLPSM
Shipped by truck (or transport)	XLPSP
Shipped by air mail	XLPSD
Shipped by air express	XLPSU
Shipped by parcel post	XLPSC
Shipped by parcel post special delivery	XLORM
Shipped by air freight	XLDGM

INQUIRIES & INFORMATION ON SHIPMENTS

Have you shipped?	XLMOG
How and when did you ship?	XLMOP
Wire shipping date of our order	XLGTS
Wire full forwarding information	XLGTG

GROUP 0

ENGINE AND CLUTCH

MEMORANDA

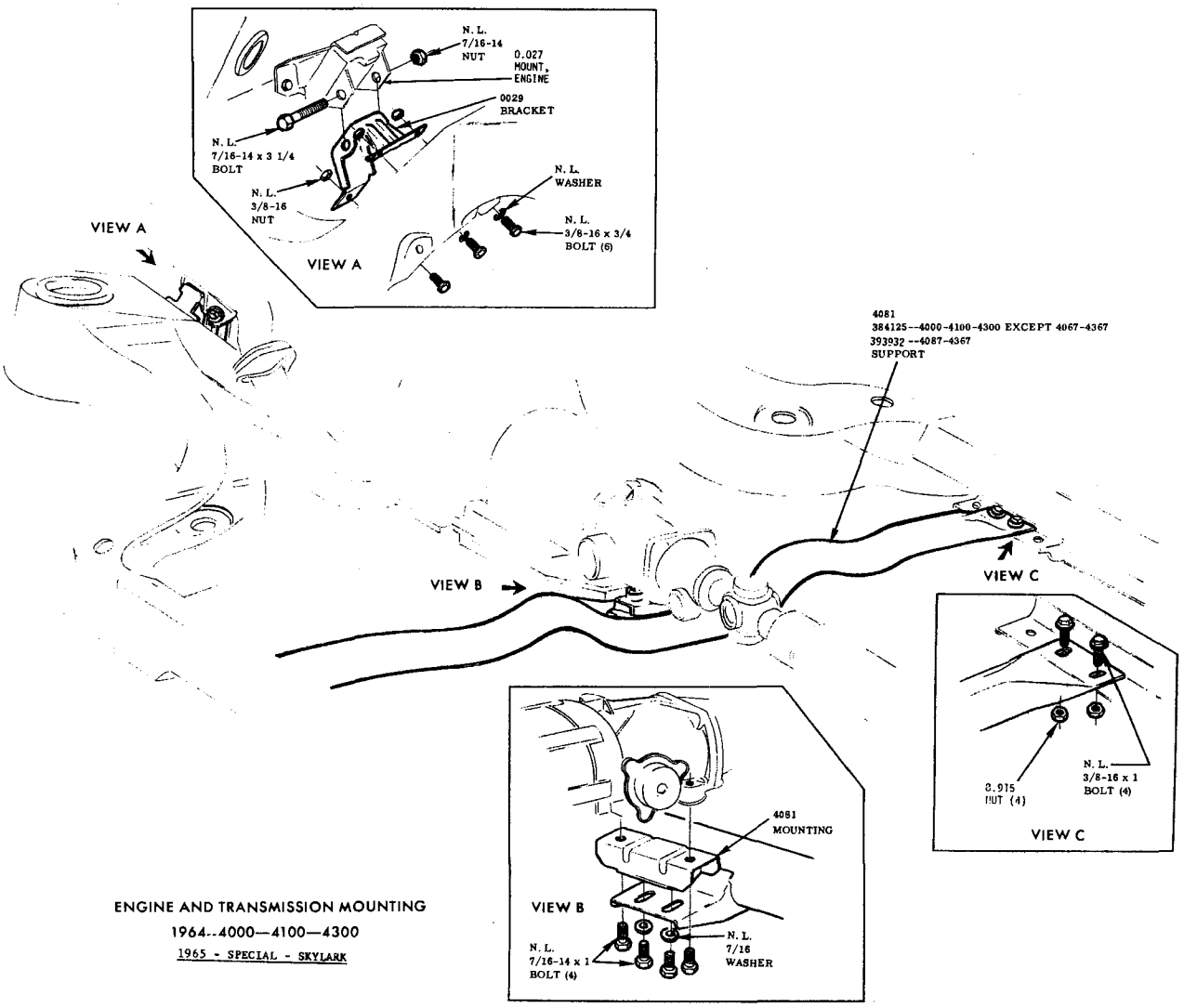

ENGINE AND TRANSMISSION MOUNTING

1964--4000—4100—4300

1965 - SPECIAL - SKYLARK

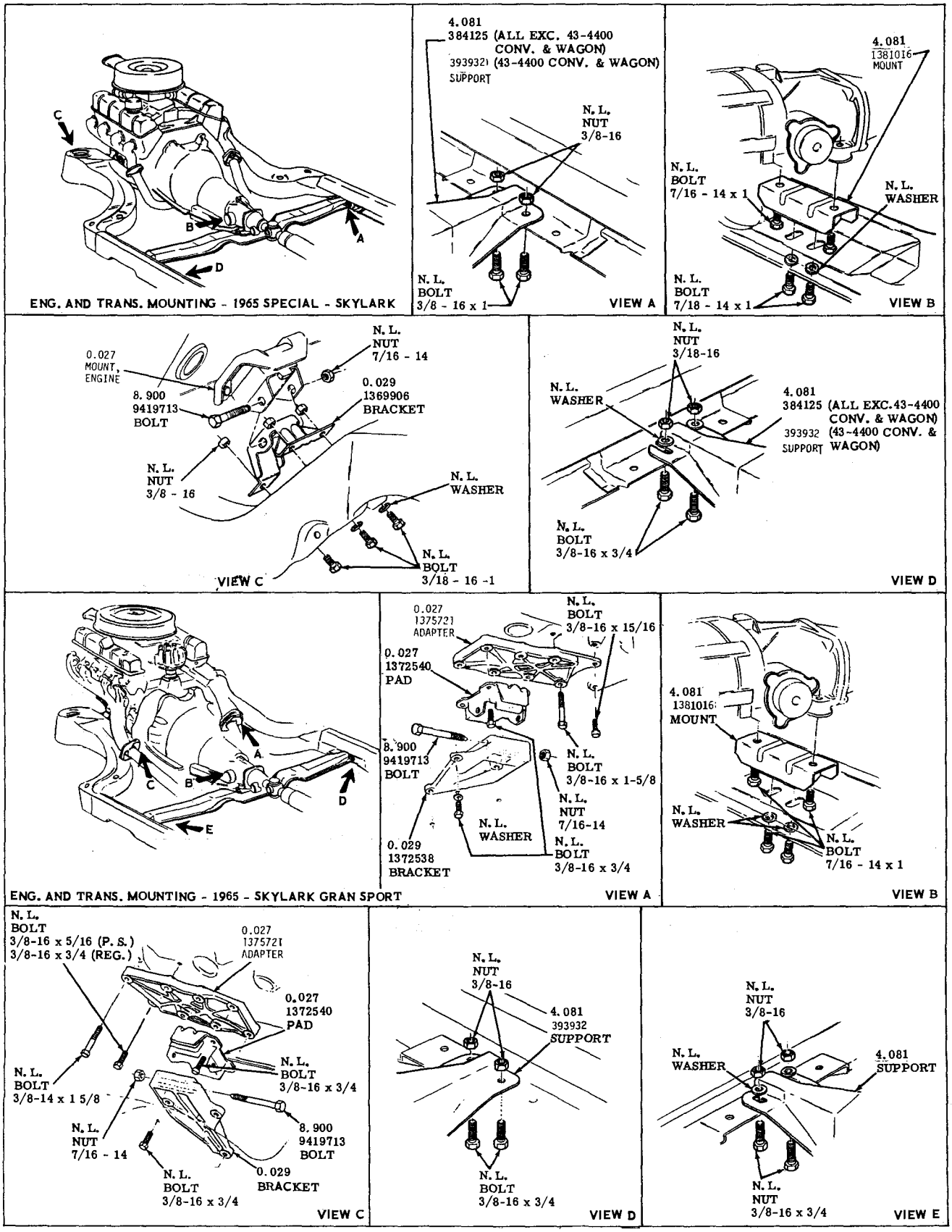

ENGINE AND TRANSMISSION MOUNTING
1965 - SPECIAL - SKYLARK AND
SKYLARK GRAN SPORT

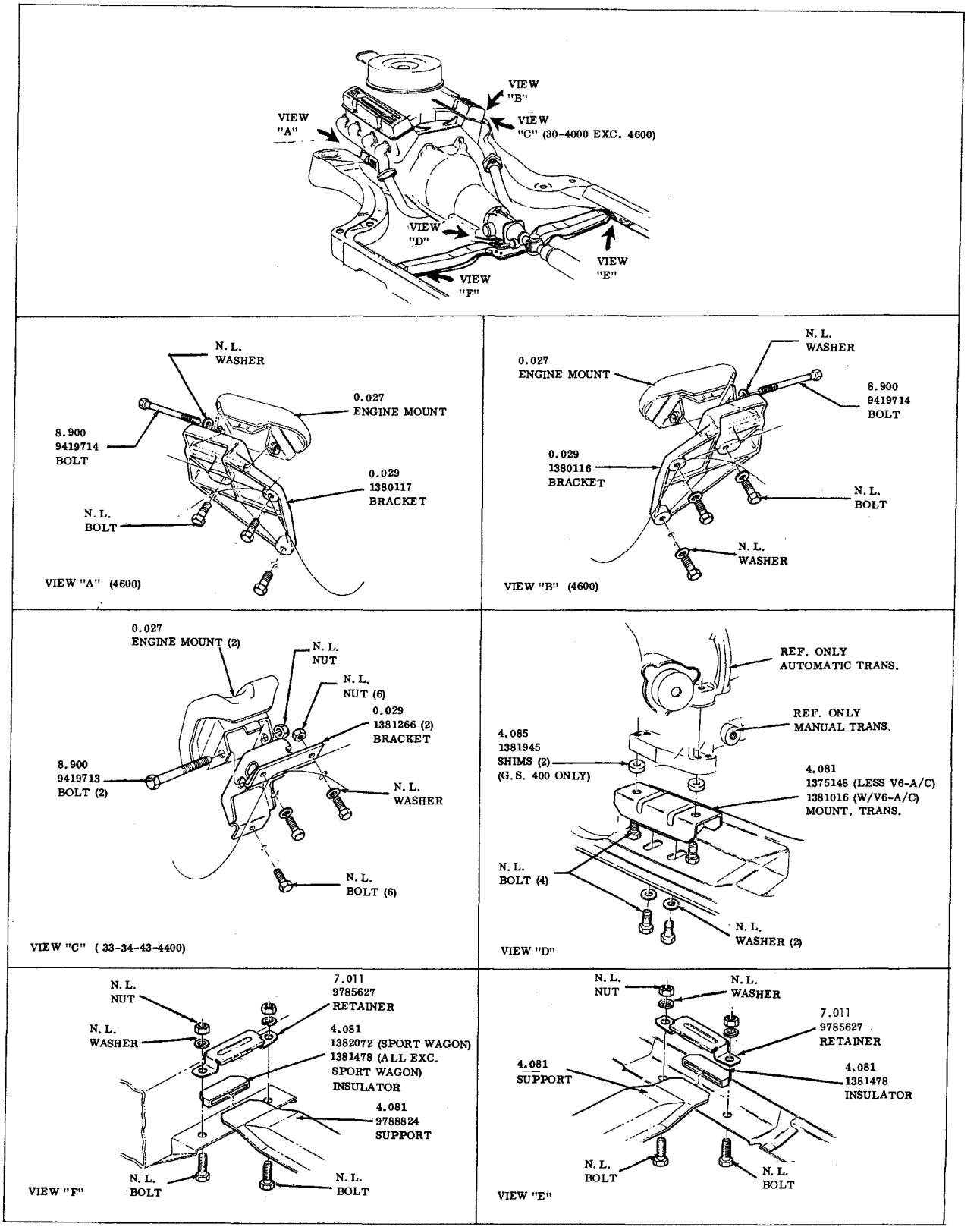

ENGINE AND TRANSMISSION MOUNTING

1967—SPECIAL

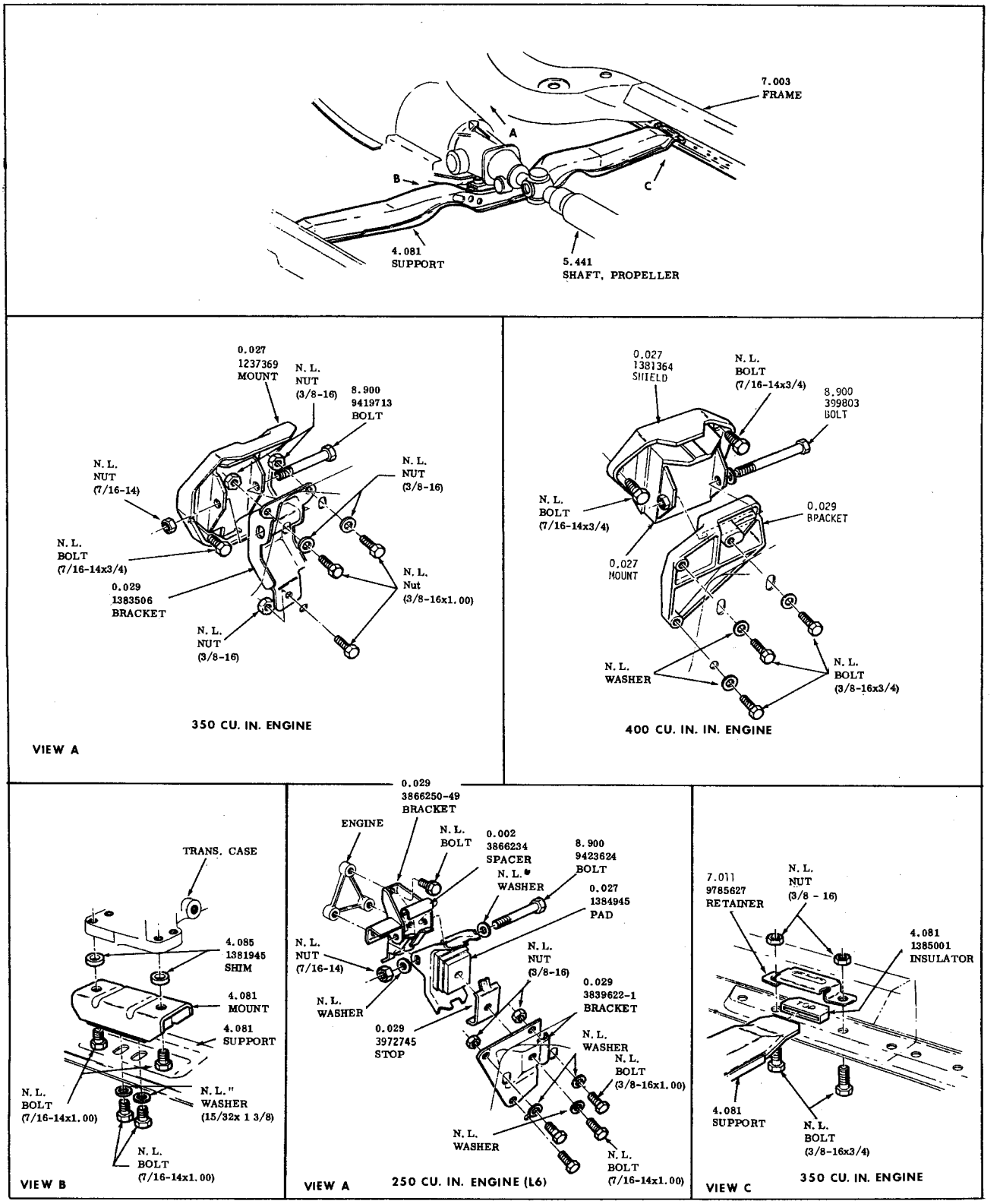

ENGINE & TRANSMISSION MOUNTING
1968 - 30-4000

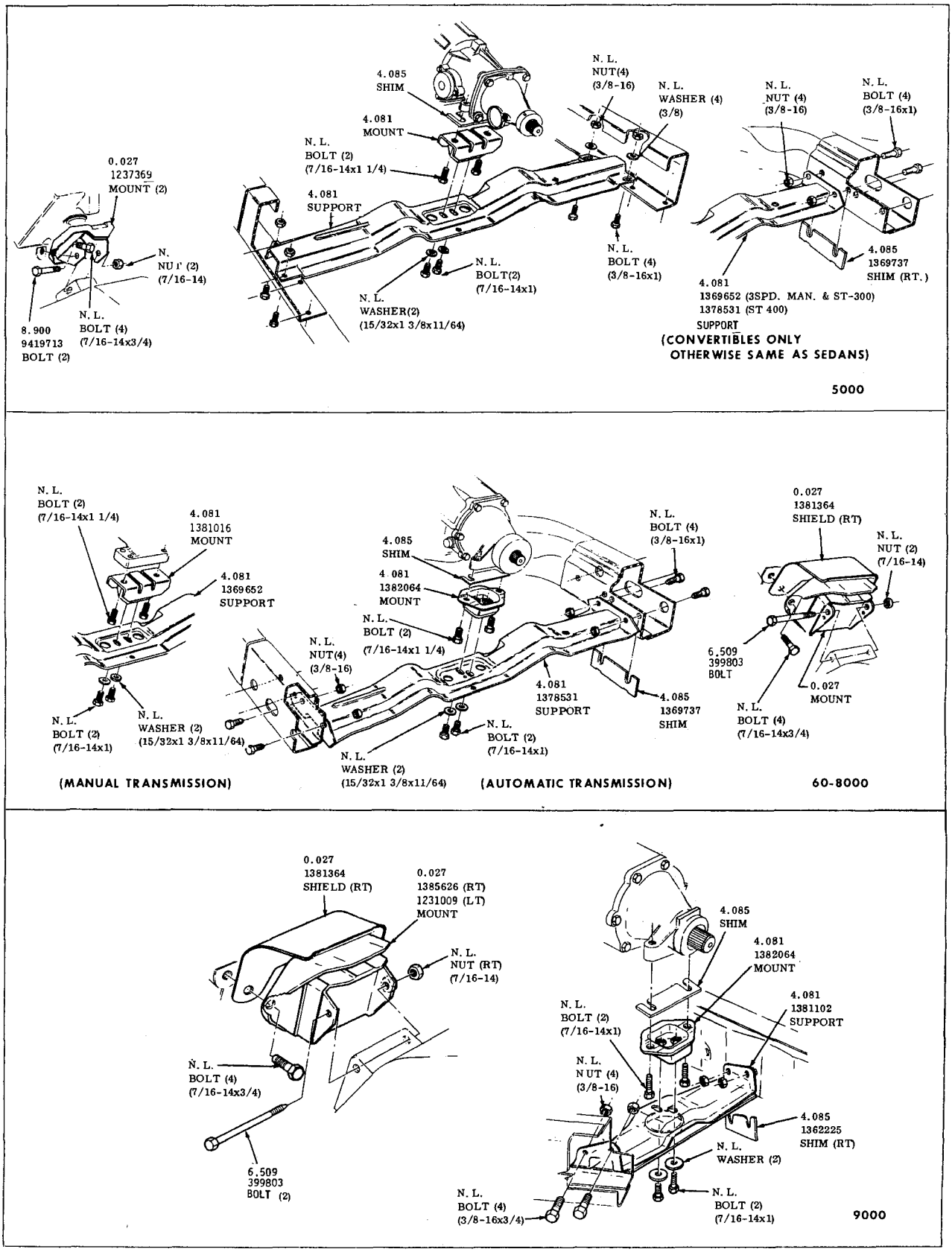

ENGINE & TRANSMISSION MOUNTING
1968-50-60-80-9000

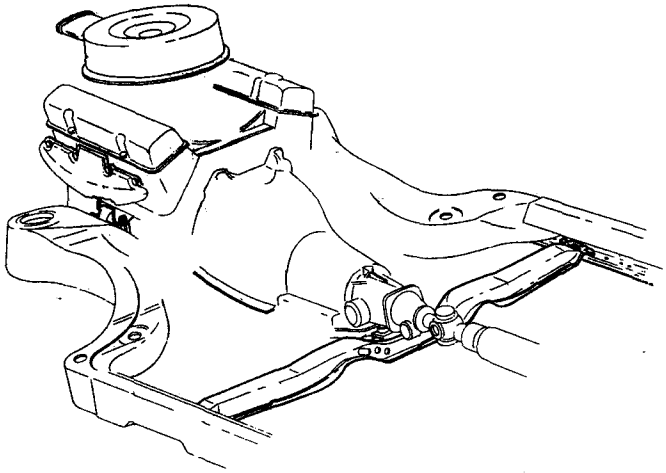

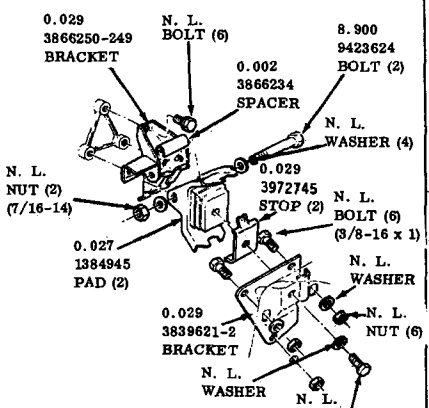

250-L-6 ENG.

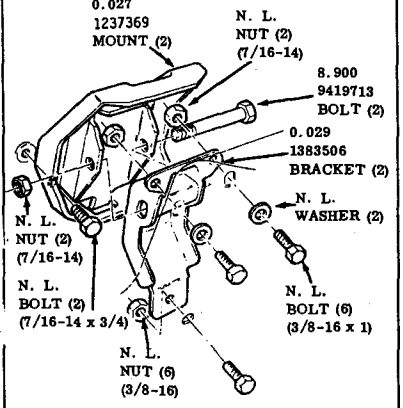

350-V-8 ENG.

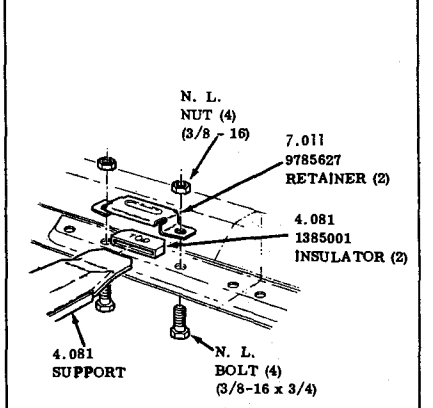

TRANS. SUPPORT

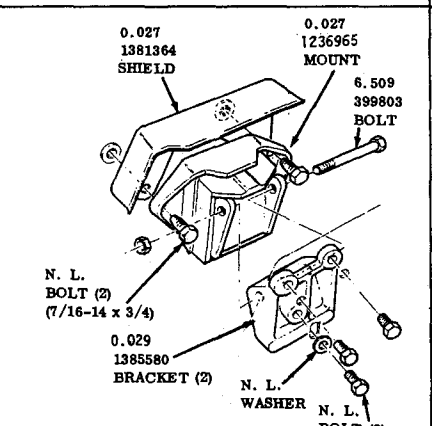

400-V-8 ENG. (RT. SIDE)

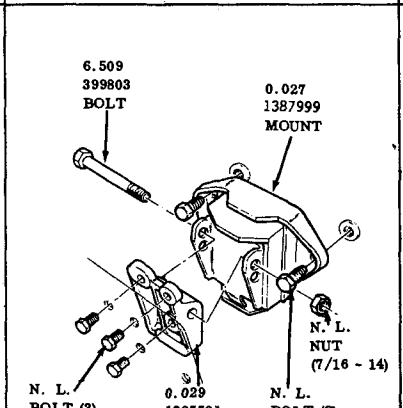

400-V-8 ENG. (LT. SIDE)

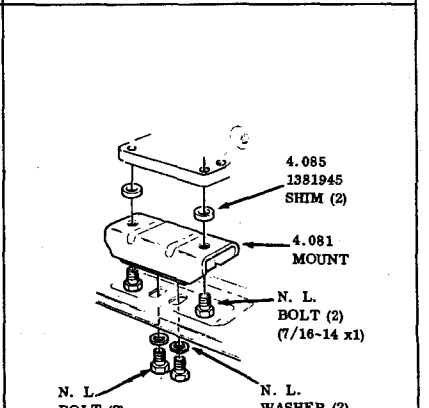

TRANS. MOUNT

ENGINE & TRANSMISSION MOUNTING

1969-1970-30-4000

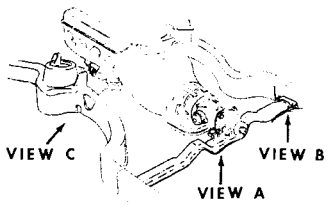

50-60-8000

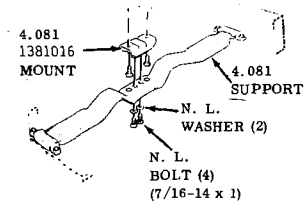

VIEW A MANUAL & ST. 300 AUTO.

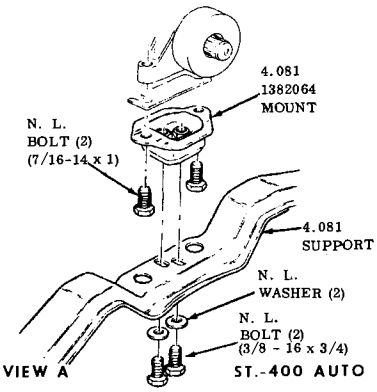

VIEW A ST.-400 AUTO

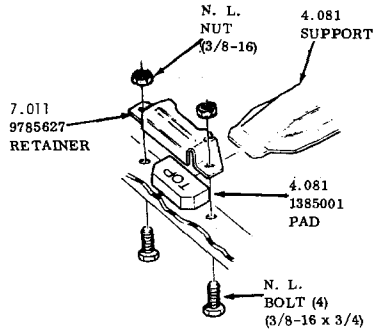

VIEW B 50-60-8000

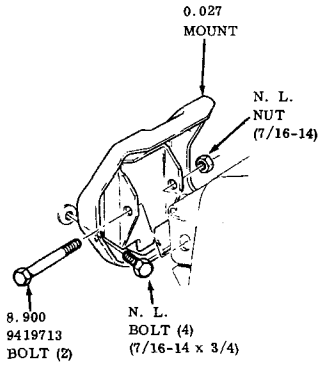

VIEW C 350-CU.IN. ENG.

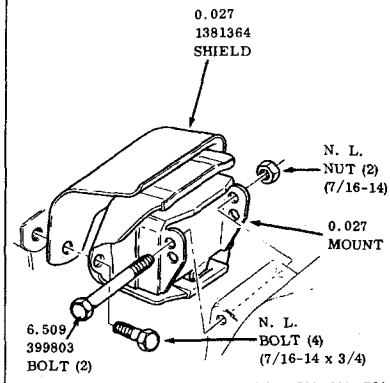

VIEW C 430 CU. IN. ENG.

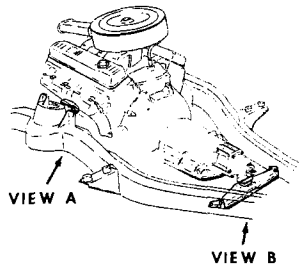

9000

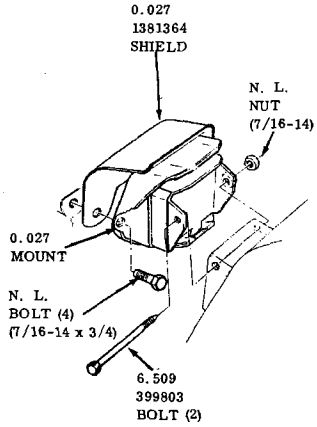

VIEW A 9000 430 CU. IN. ENG.

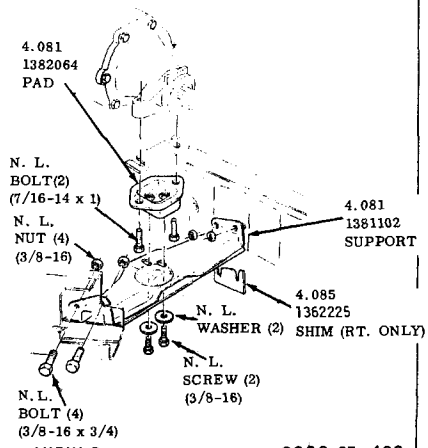

VIEW B 9000 ST.-400

ENGINE & TRANSMISSION MOUNTING
1969-1970-50-60-80-9000

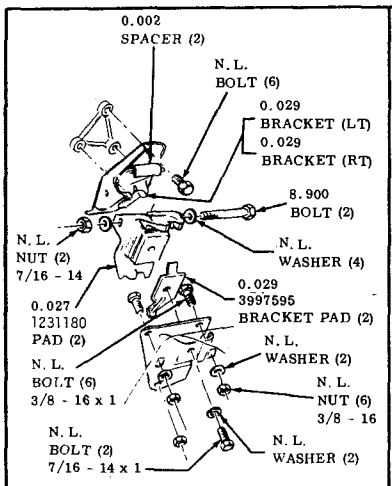

250 CU. IN. ENG.

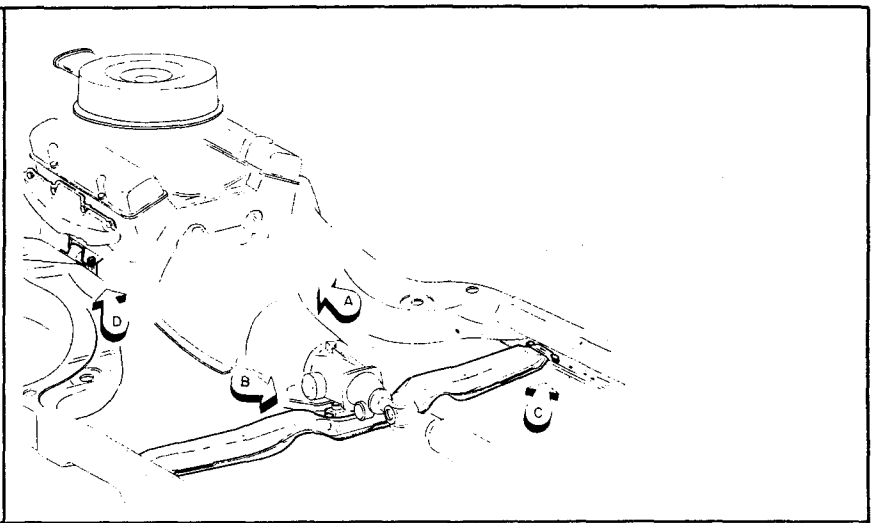

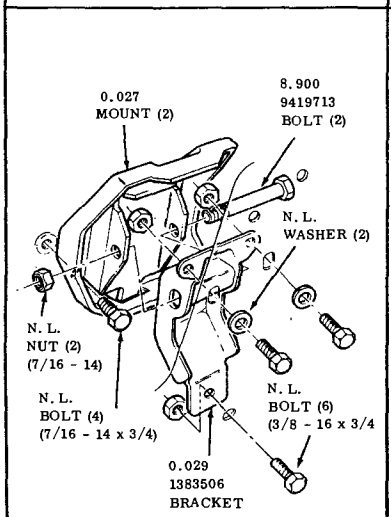

350 CU. IN. ENG.

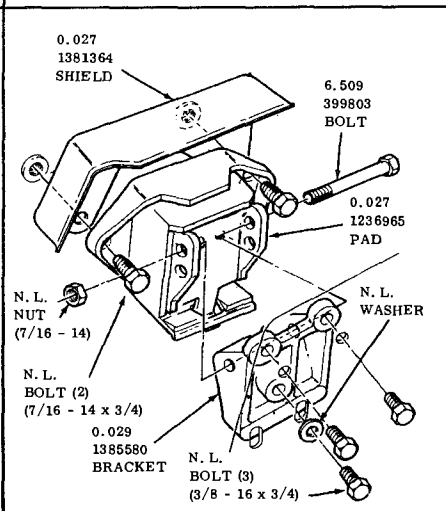

455 CU. IN. ENG.(RT. SIDE)

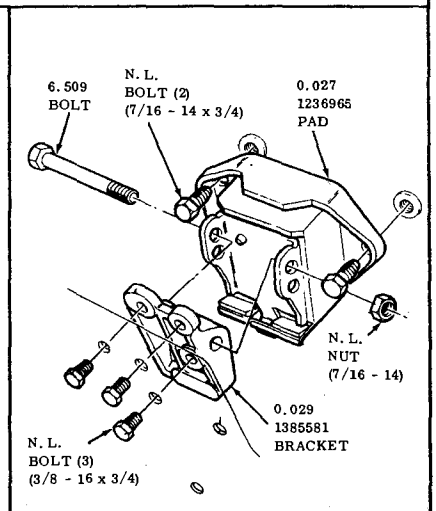

455 CU. IN. ENG. (LT. SIDE)

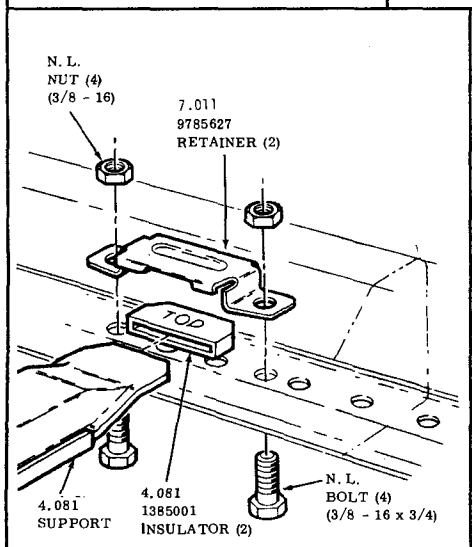

COUPES - SEDANS & WAGONS

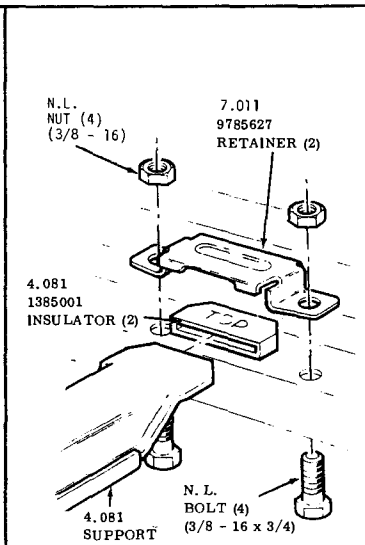

CONVERTIBLE

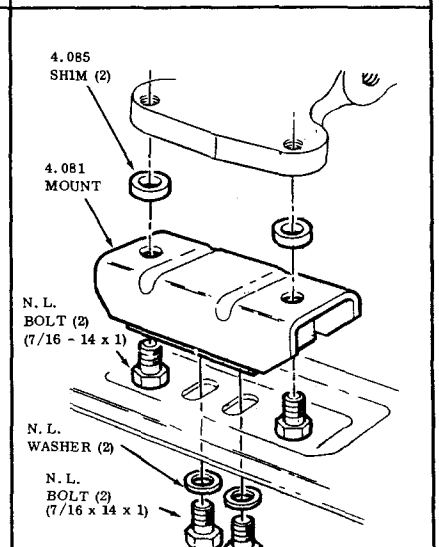

MANUAL TRANS.

ENGINE AND TRANSMISSION MOUNTING

1971-72 -30-4000

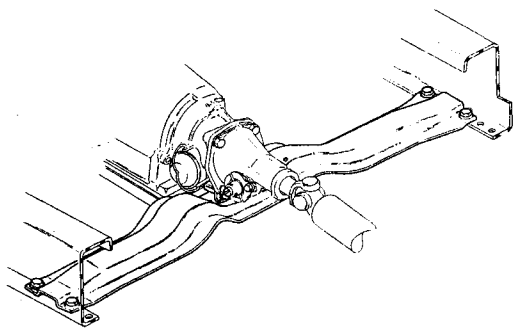

5000 (350 CU. IN. ENG.)

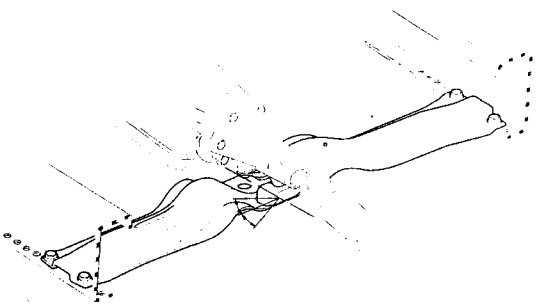

50-60-80-9000 (455 CU. IN. ENG.)

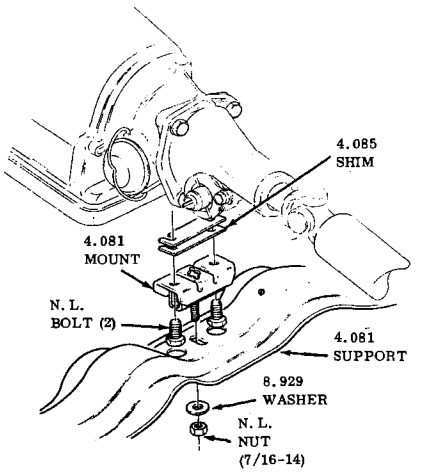

5000 (350 CU. IN. ENG.)

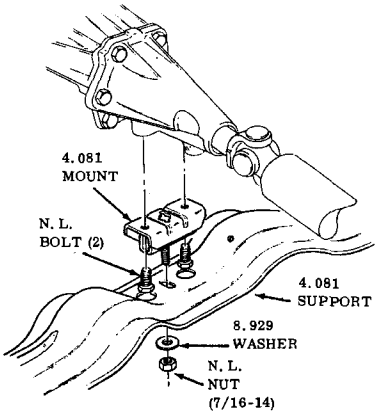

6035-45

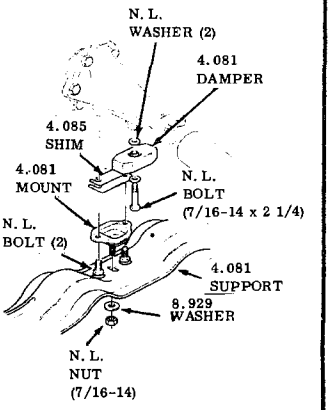

52-82-9400

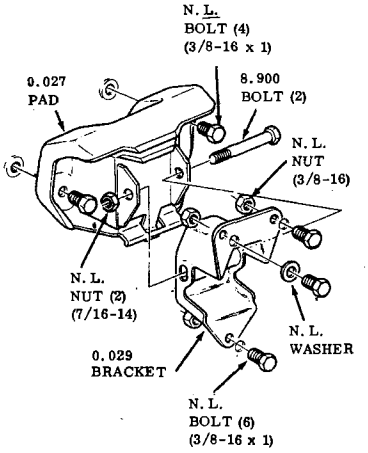

5000 (350 CU. IN. ENG.)

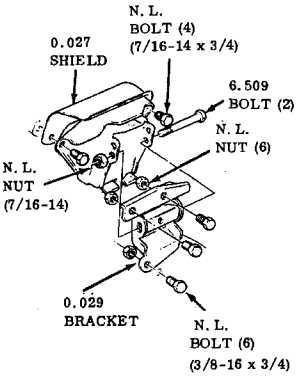

455 CU. IN. ENG.

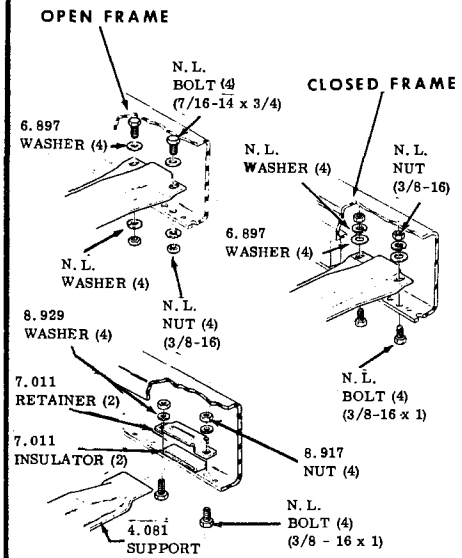

ENGINE & TRANSMISSION MOUNTING

1971-1972 50-60-80-9000

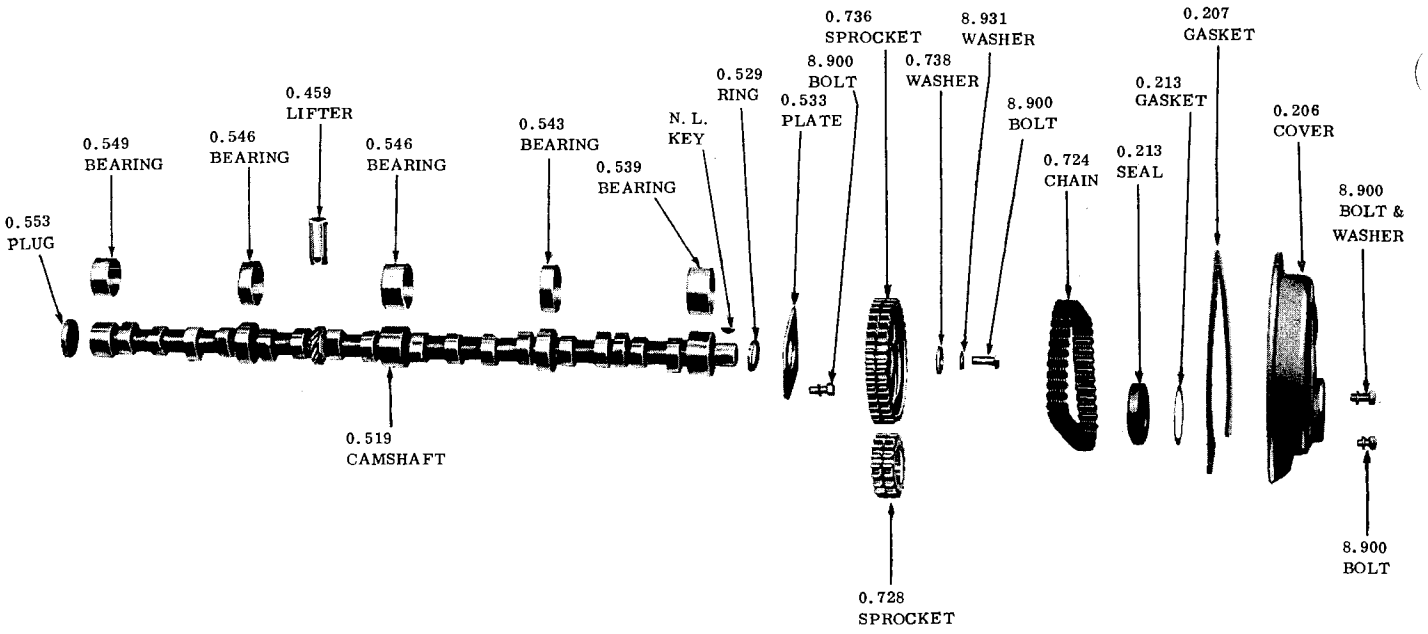

1953-60 ENGINE CAMSHAFT, BEARINGS, TIMING GEARS AND COVER

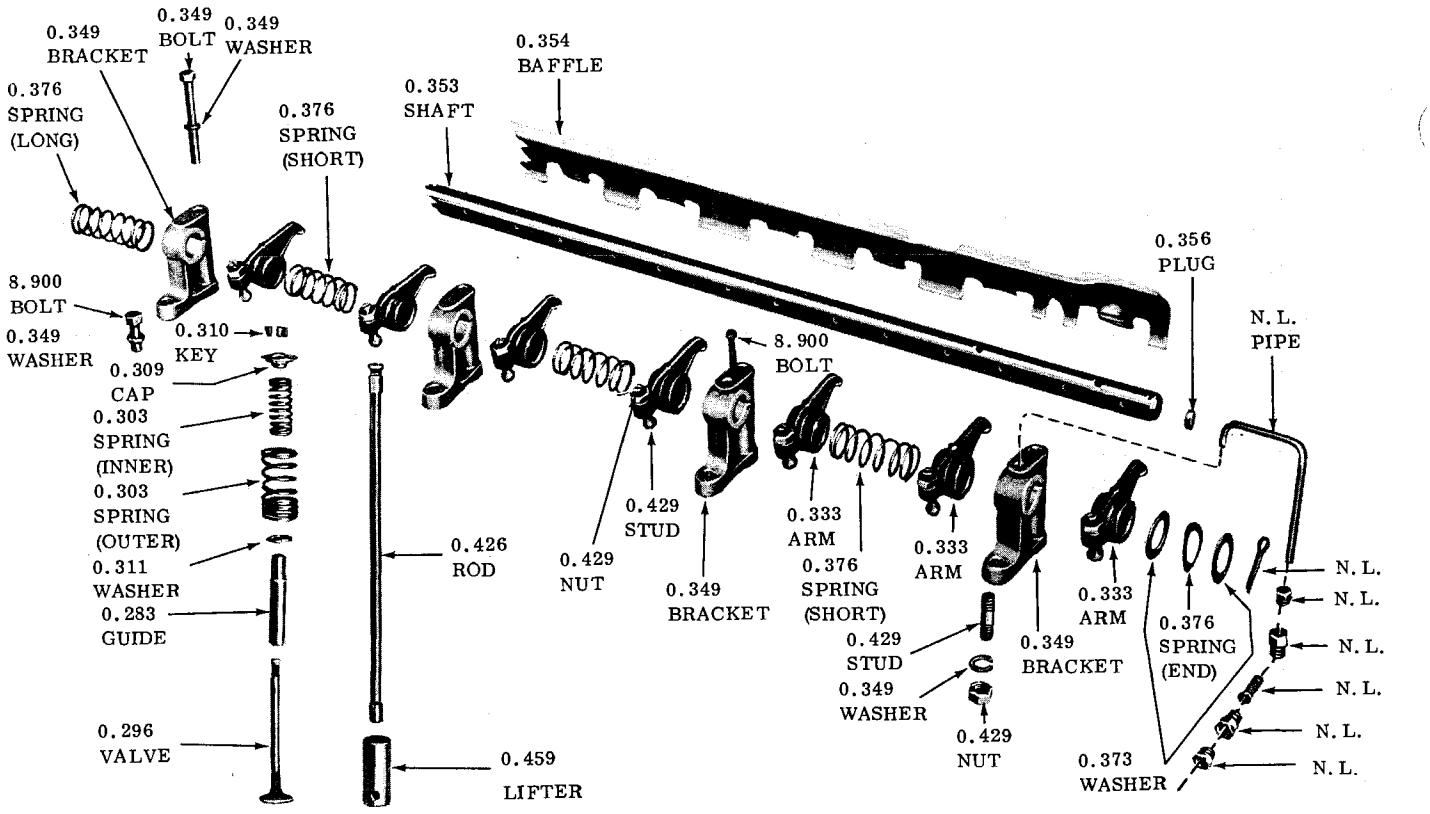

1953-60 ENGINE ROCKER ARMS, SHAFT, BRACKETS AND VALVE PARTS

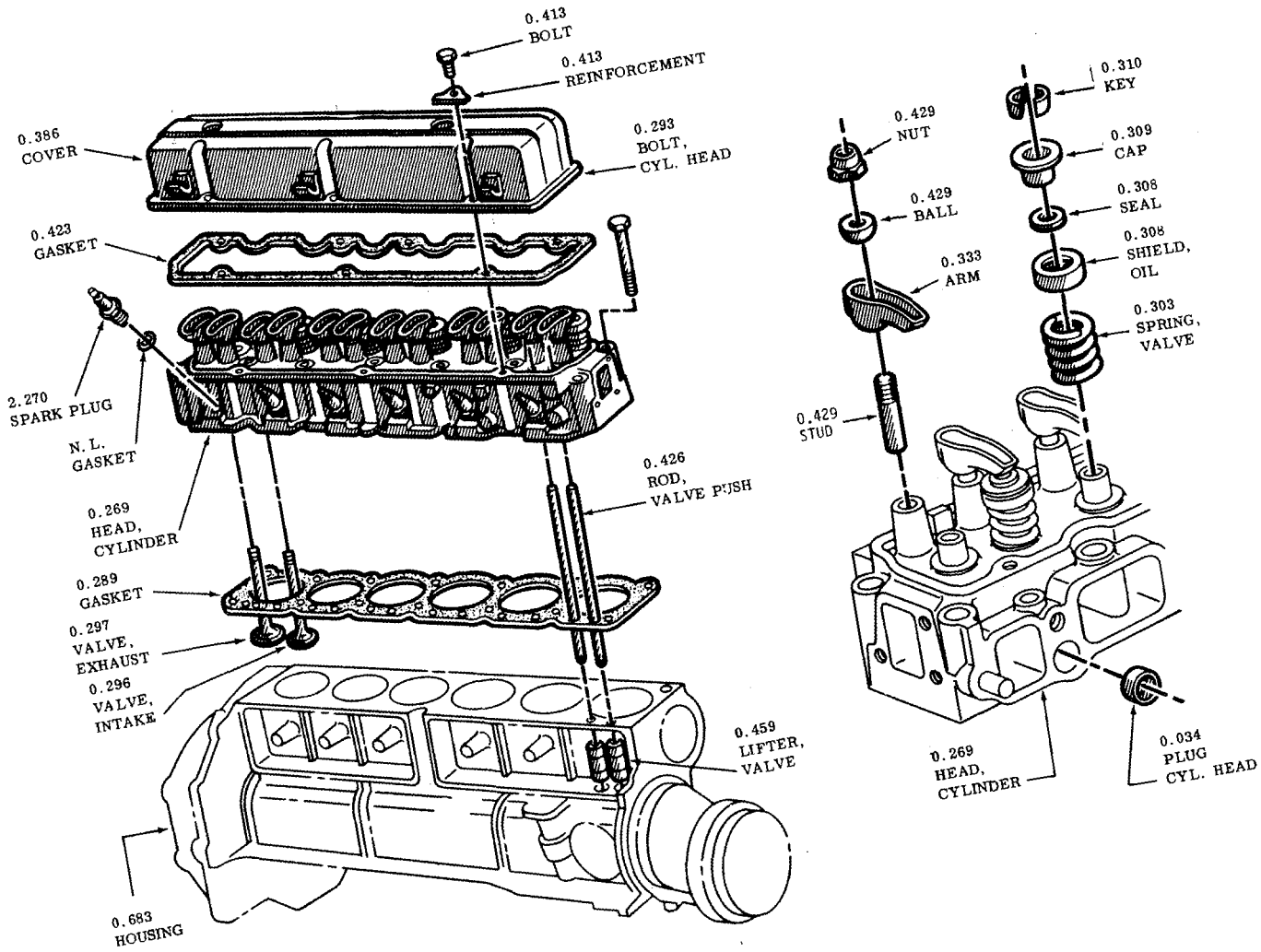

TYPICAL CYLINDER HEAD, ROCKER ARM AND COVER
1968-1971 L-6-250 - CU. IN. ENGINE

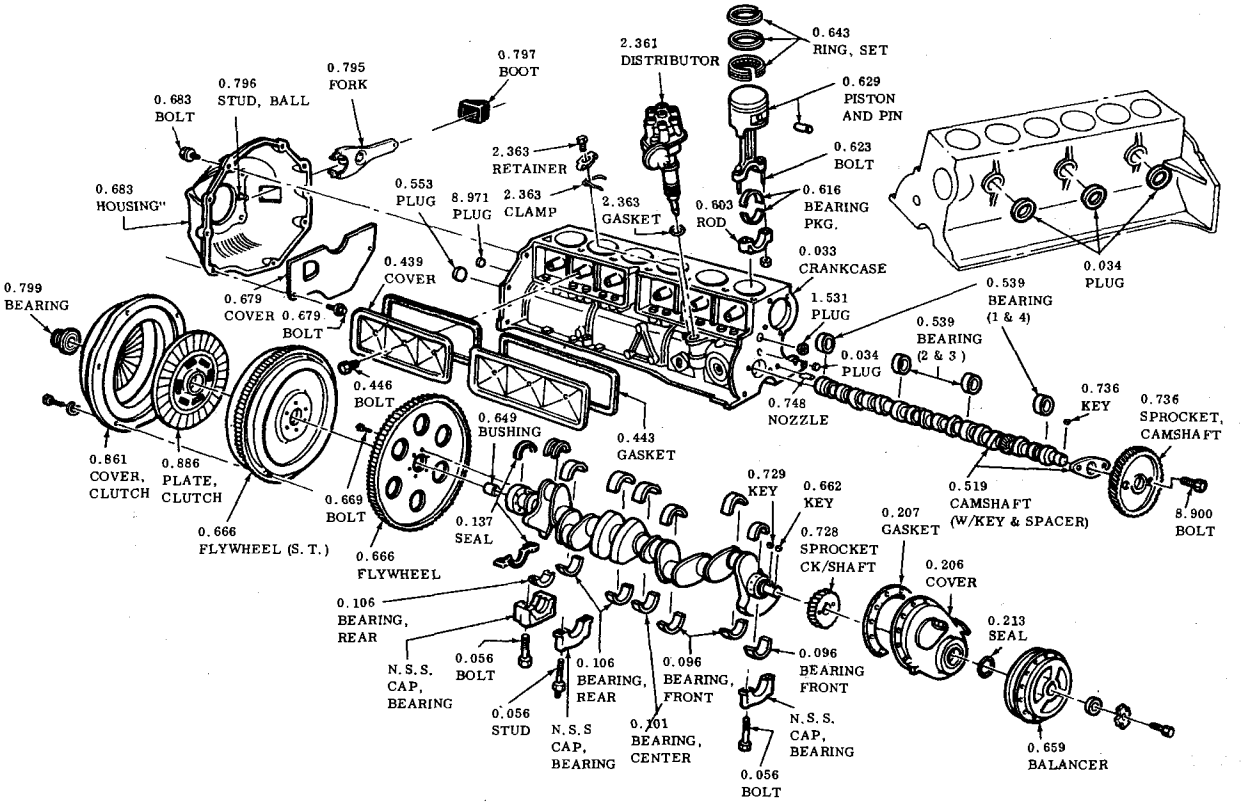

TYPICAL CRANKCASE AND PARTS
1968-1971 L-6-250 - CU. IN. ENGINE

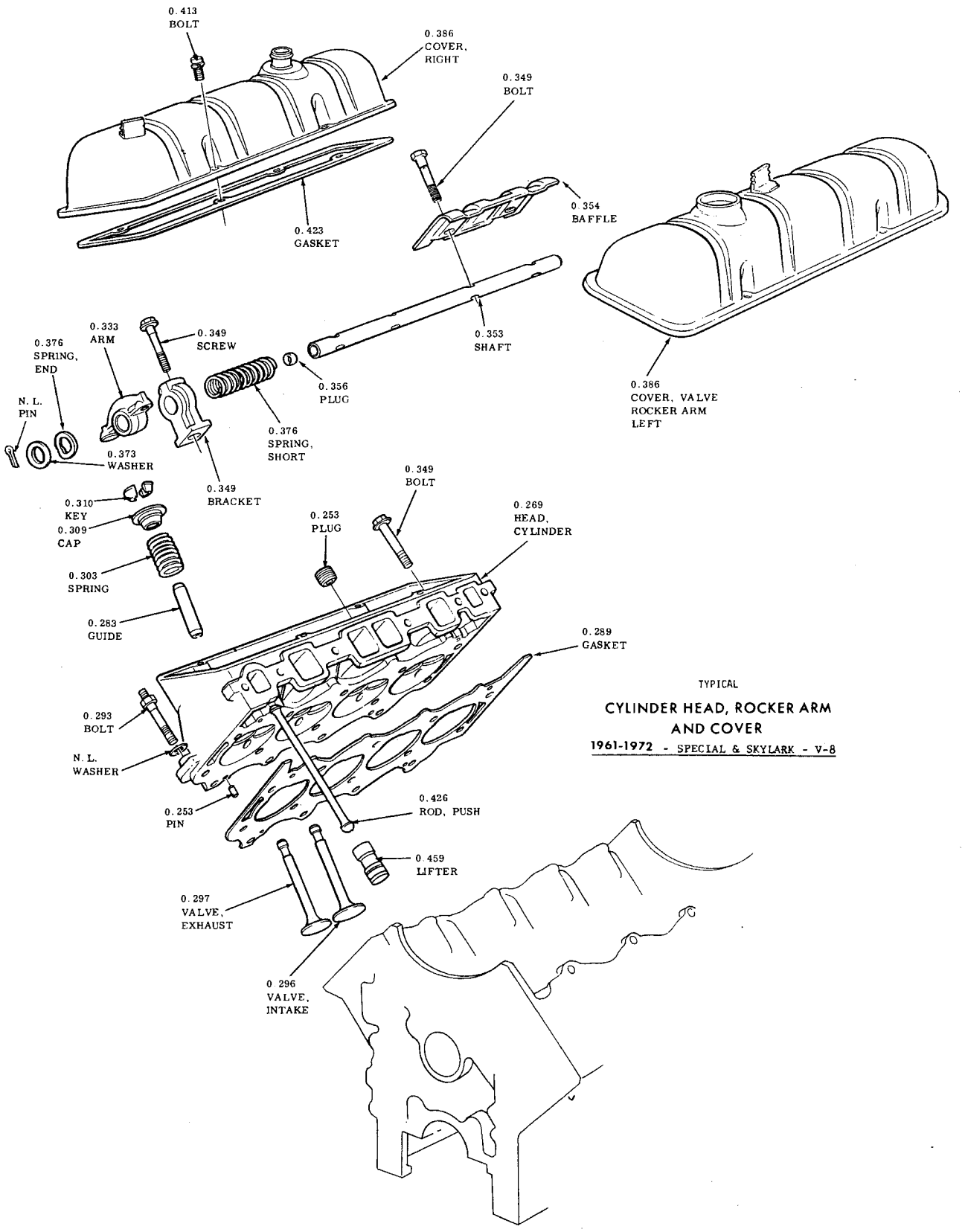

TYPICAL

CYLINDER HEAD, ROCKER ARM AND COVER

1961-1972 - SPECIAL & SKYLARK - V-8

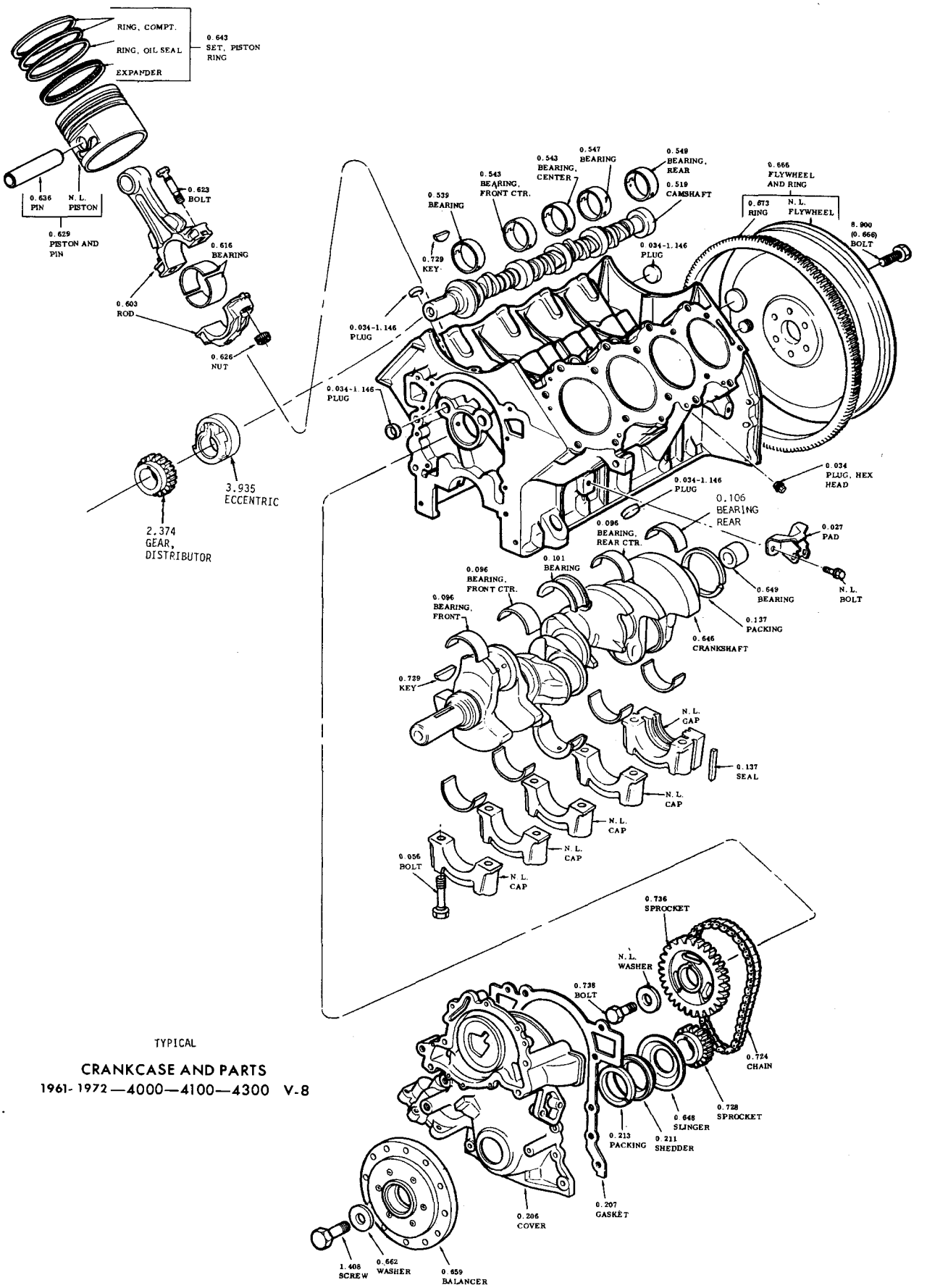

TYPICAL

CRANKCASE AND PARTS

1961-1972—4000—4100—4300 V-8

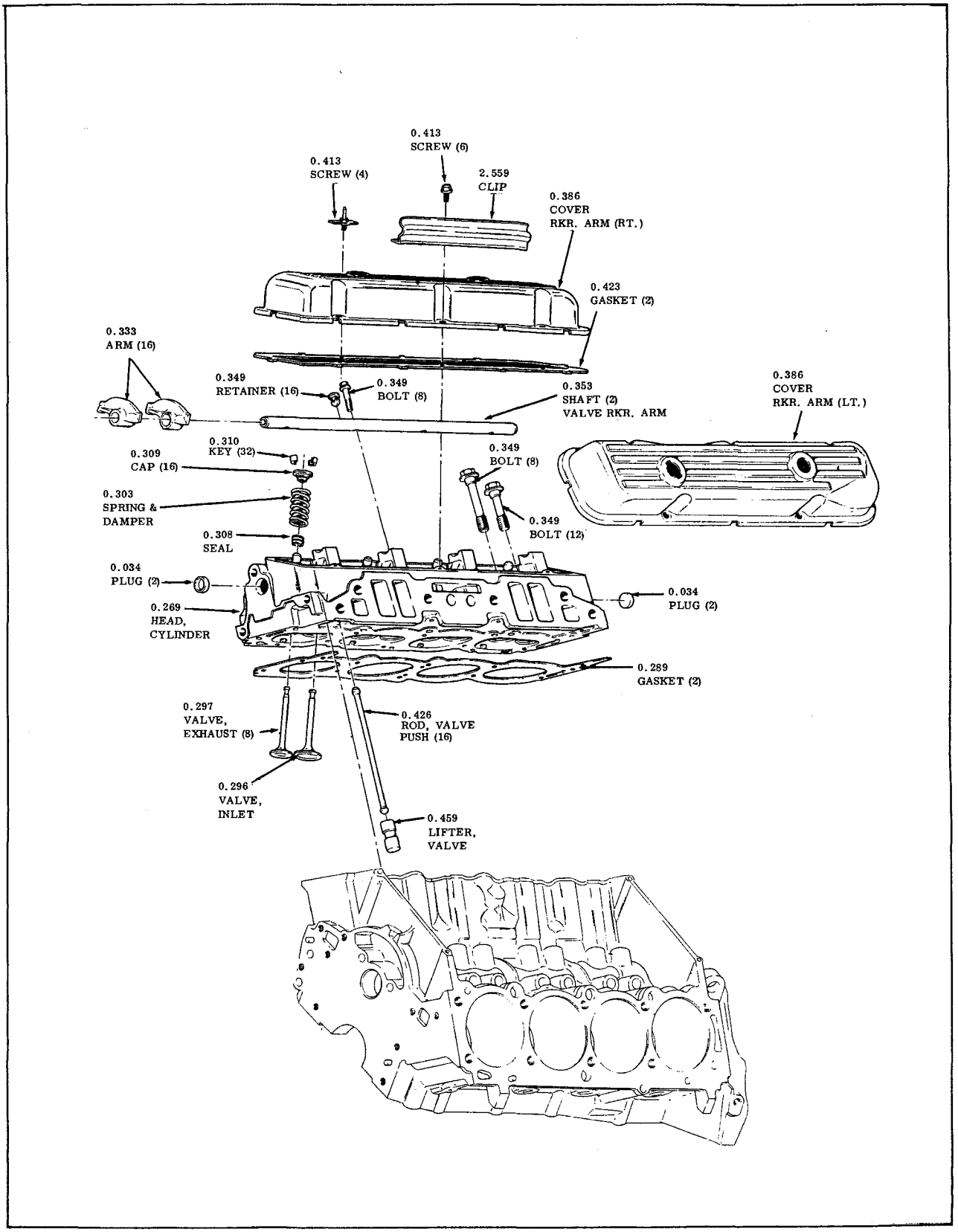

CYLINDER HEAD, ROCKER ARM AND COVER
1970-1972 -455 CU. IN. ENGINE

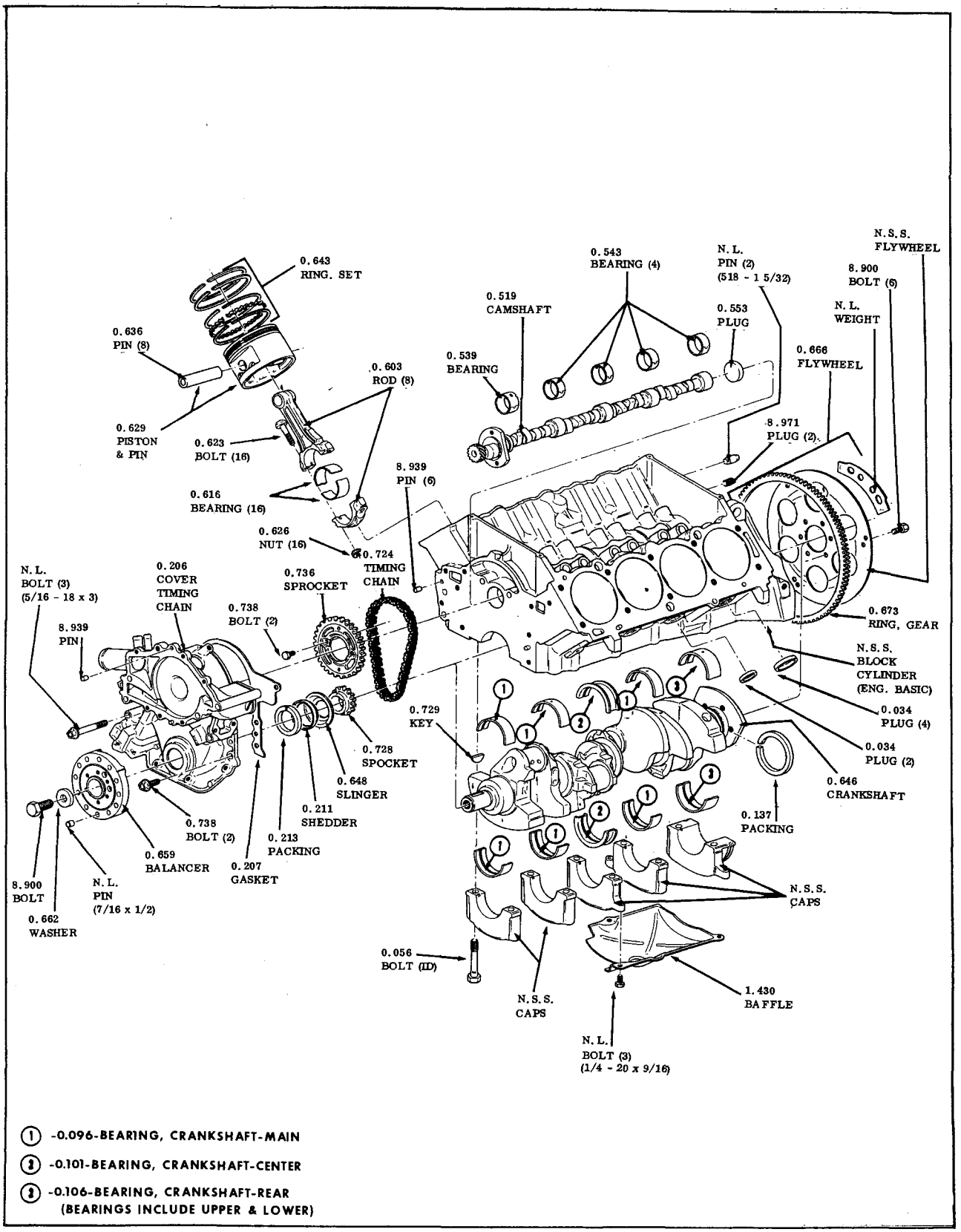

(1) -0.096-BEARING, CRANKSHAFT-MAIN

(2) -0.101-BEARING, CRANKSHAFT-CENTER

(3) -0.106-BEARING, CRANKSHAFT-REAR
(BEARINGS INCLUDE UPPER & LOWER)

CRANKCASE AND PARTS
1970-1972 455 CU. IN. ENGINE

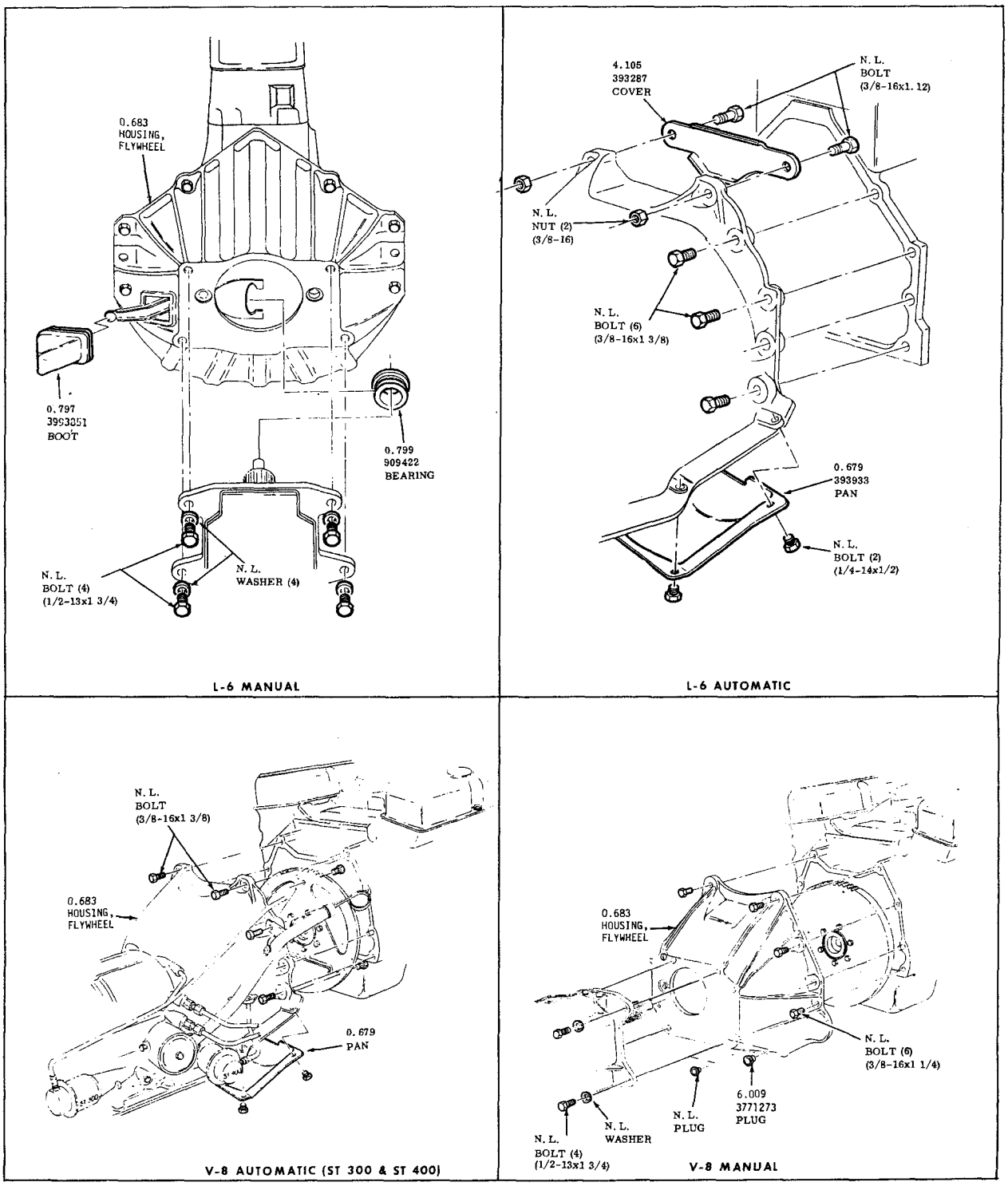

TRANSMISSION & CLUTCH-HOUSING
MOUNTING
1968-1972 - ALL

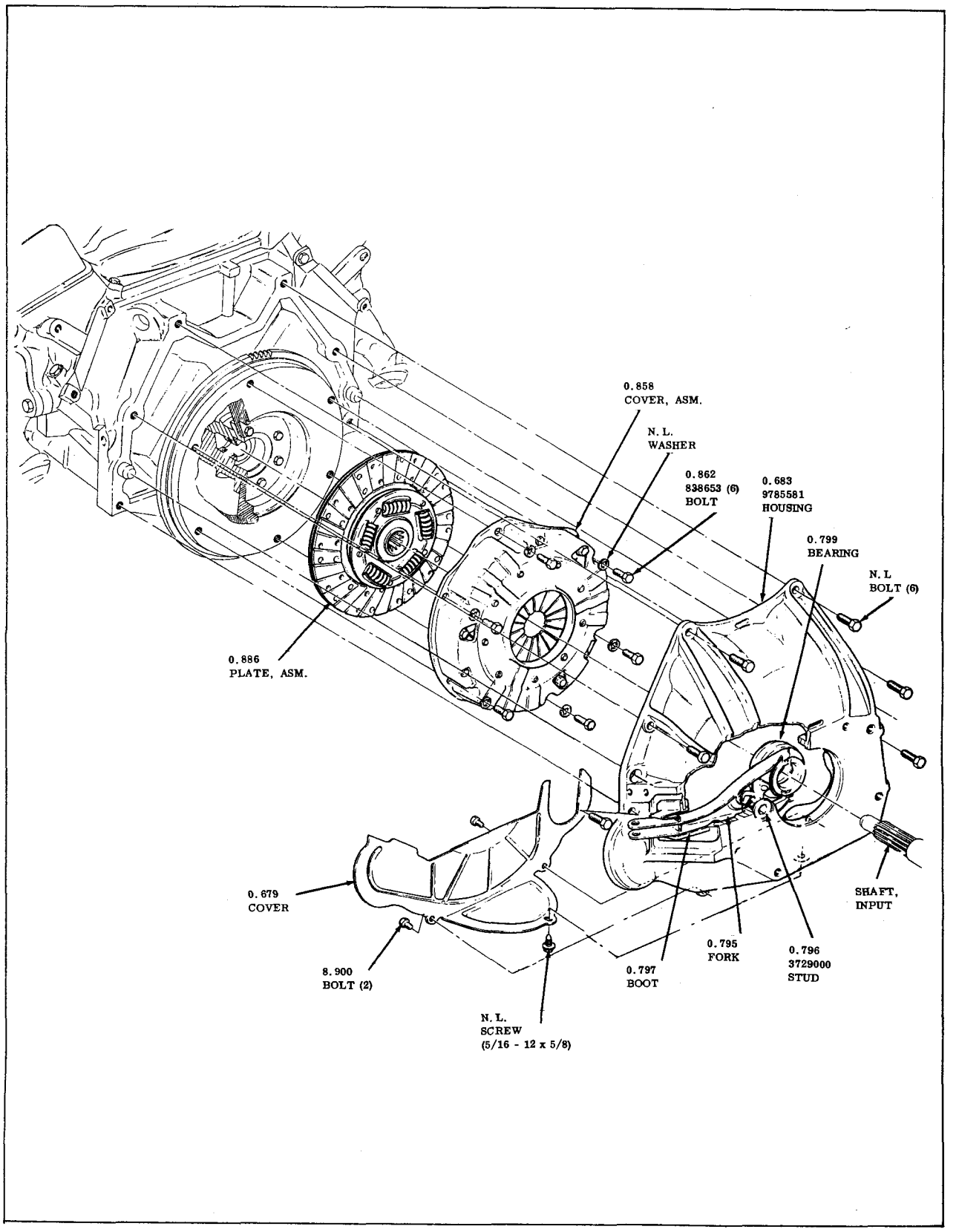

CLUTCH-MANUAL TRANSMISSION

1970-1971 -30-40-50-6000

1972 30-4000

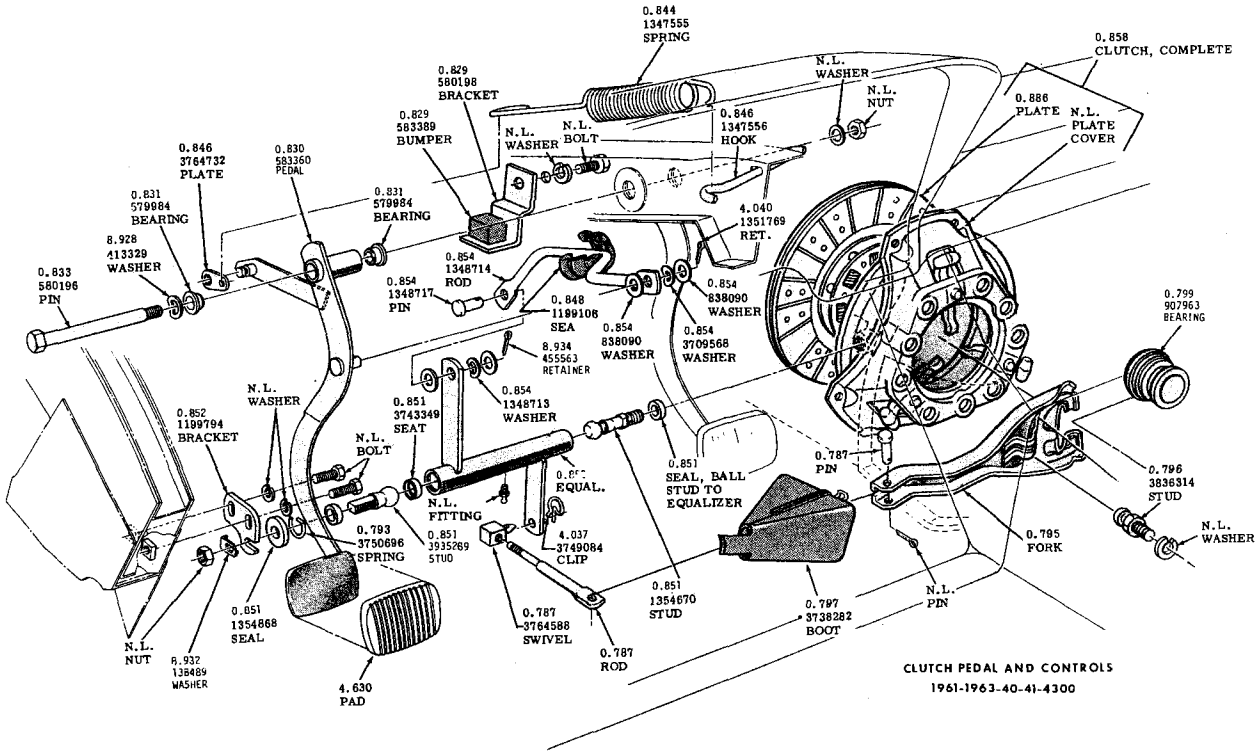

CLUTCH PEDAL AND CONTROLS
1961-1963-40-41-4300

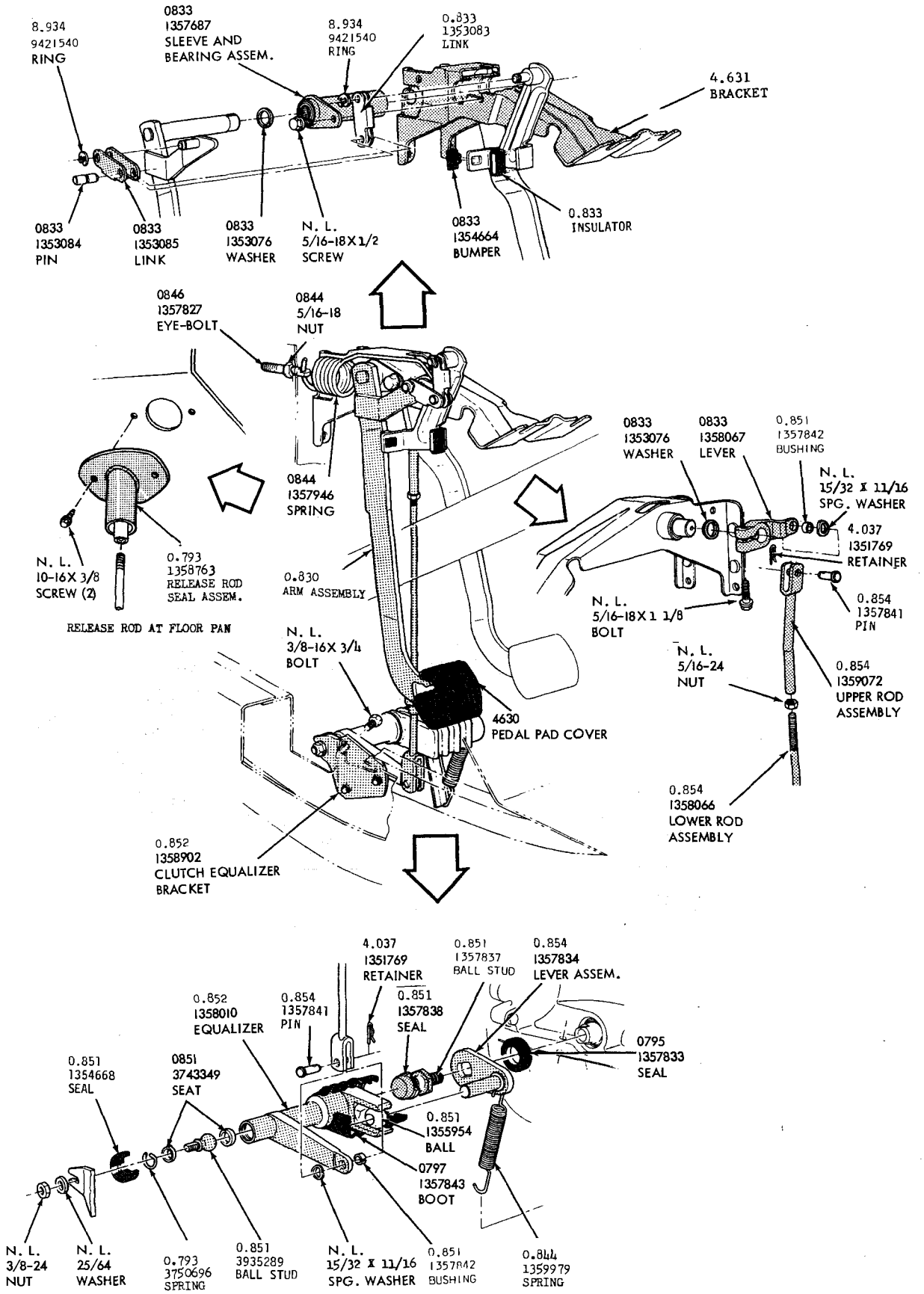

CLUTCH PEDAL & CONTROLS
-4400-4600-4800

1964 **4600**

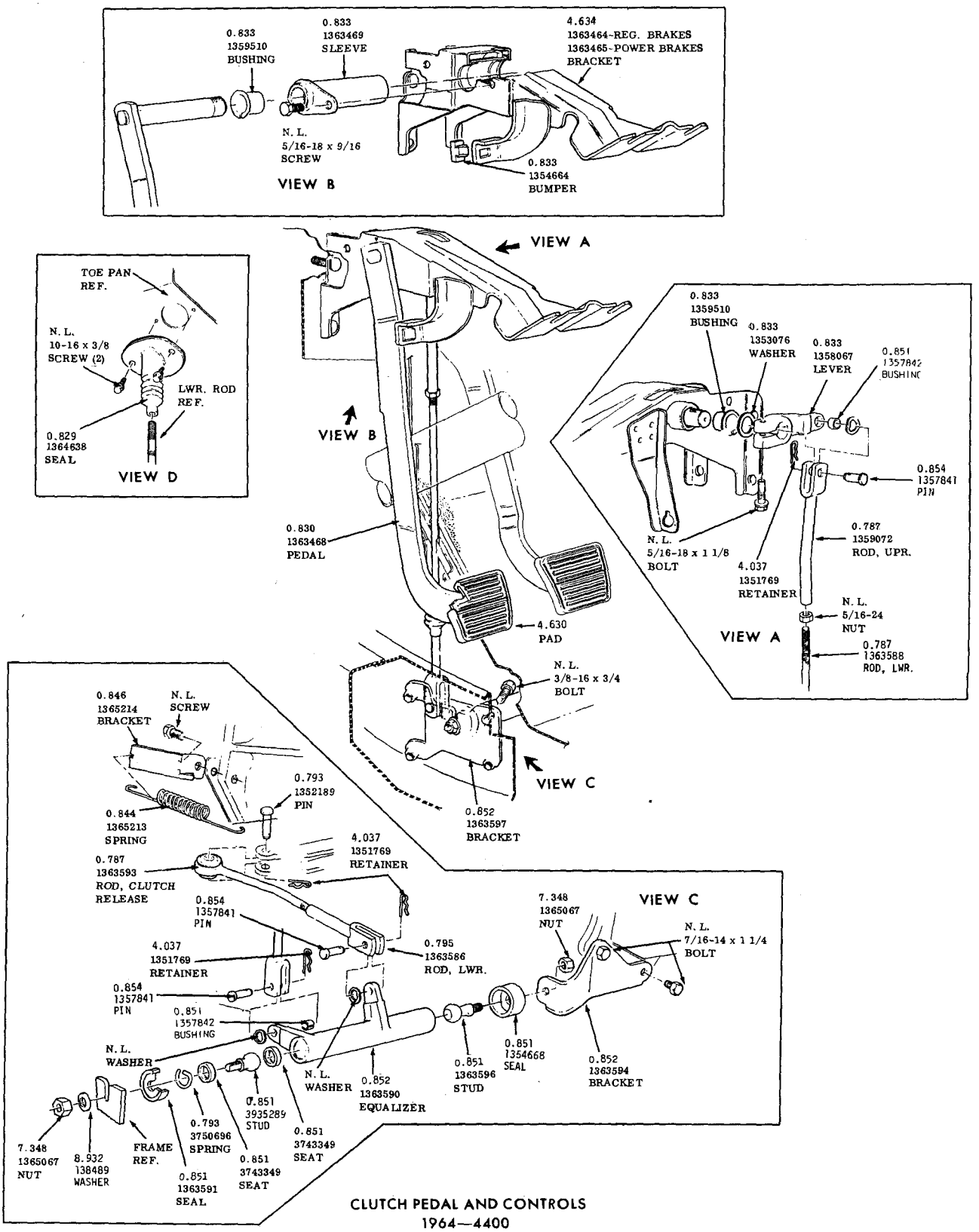

CLUTCH PEDAL AND CONTROLS
1964—4400

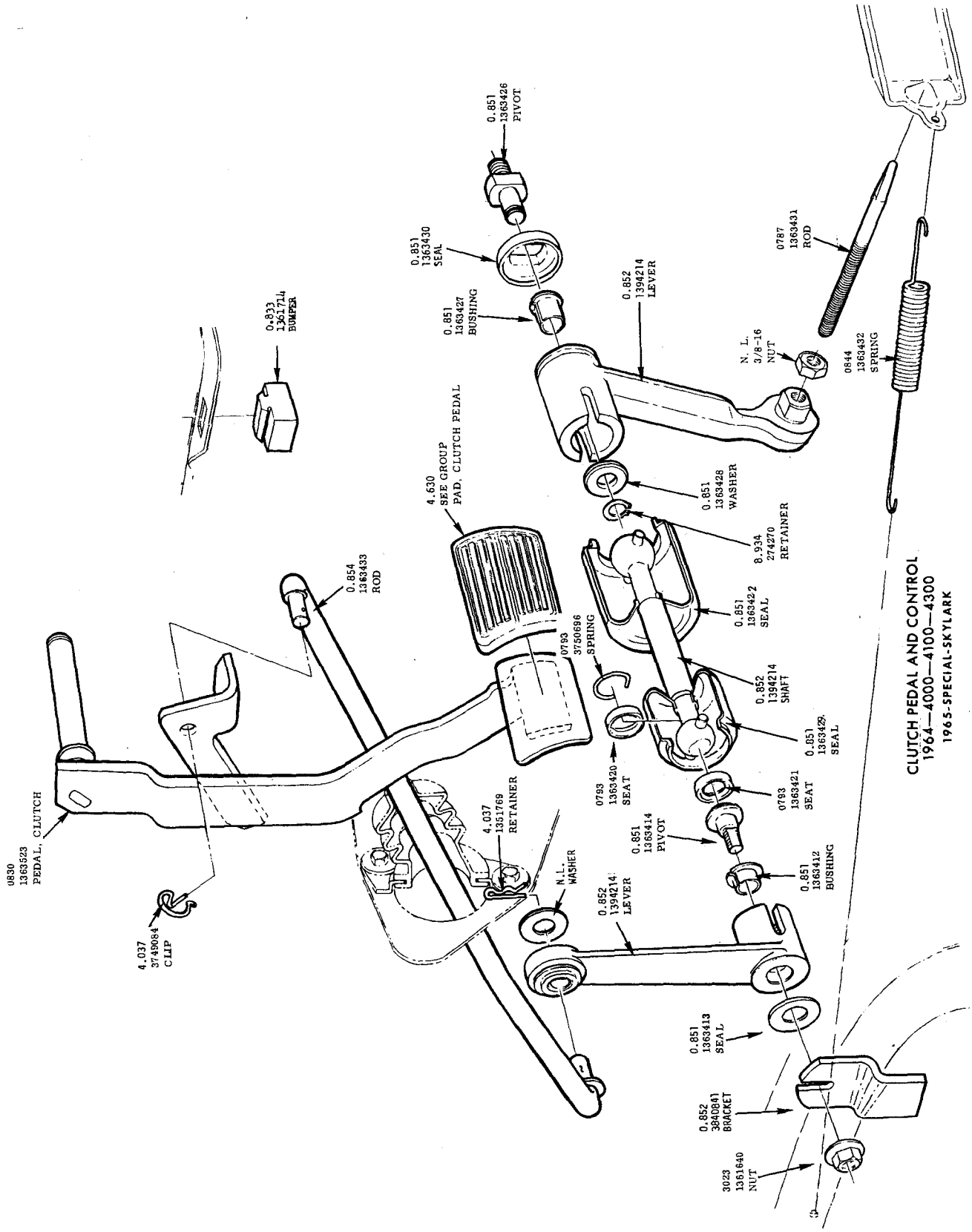

CLUTCH PEDAL AND CONTROL
1964—4000—4100—4300
1965-SPECIAL-SKYLARK

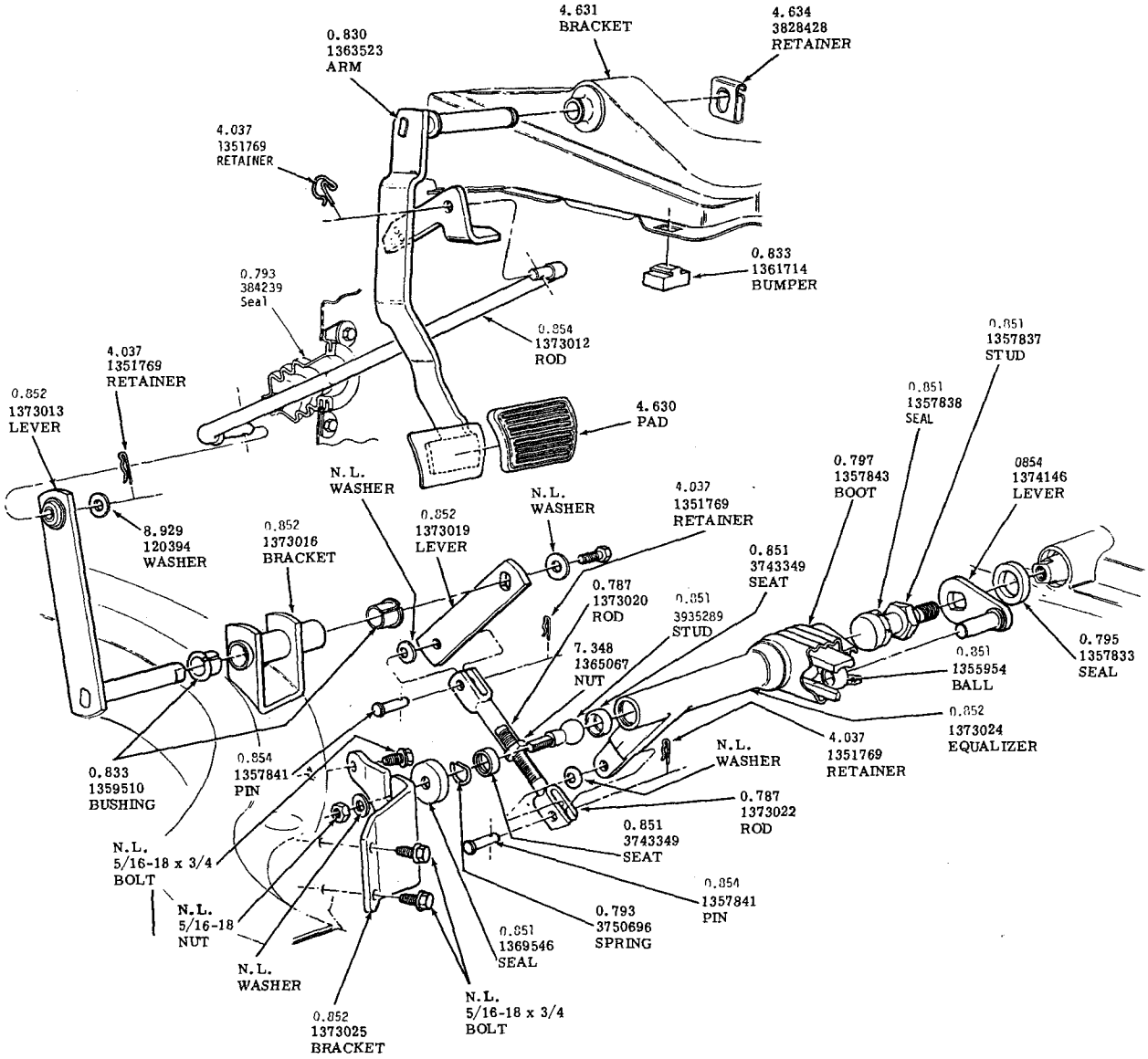

CLUTCH PEDAL AND CONTROLS
1965-1966-SKYLARK GRAN SPORT

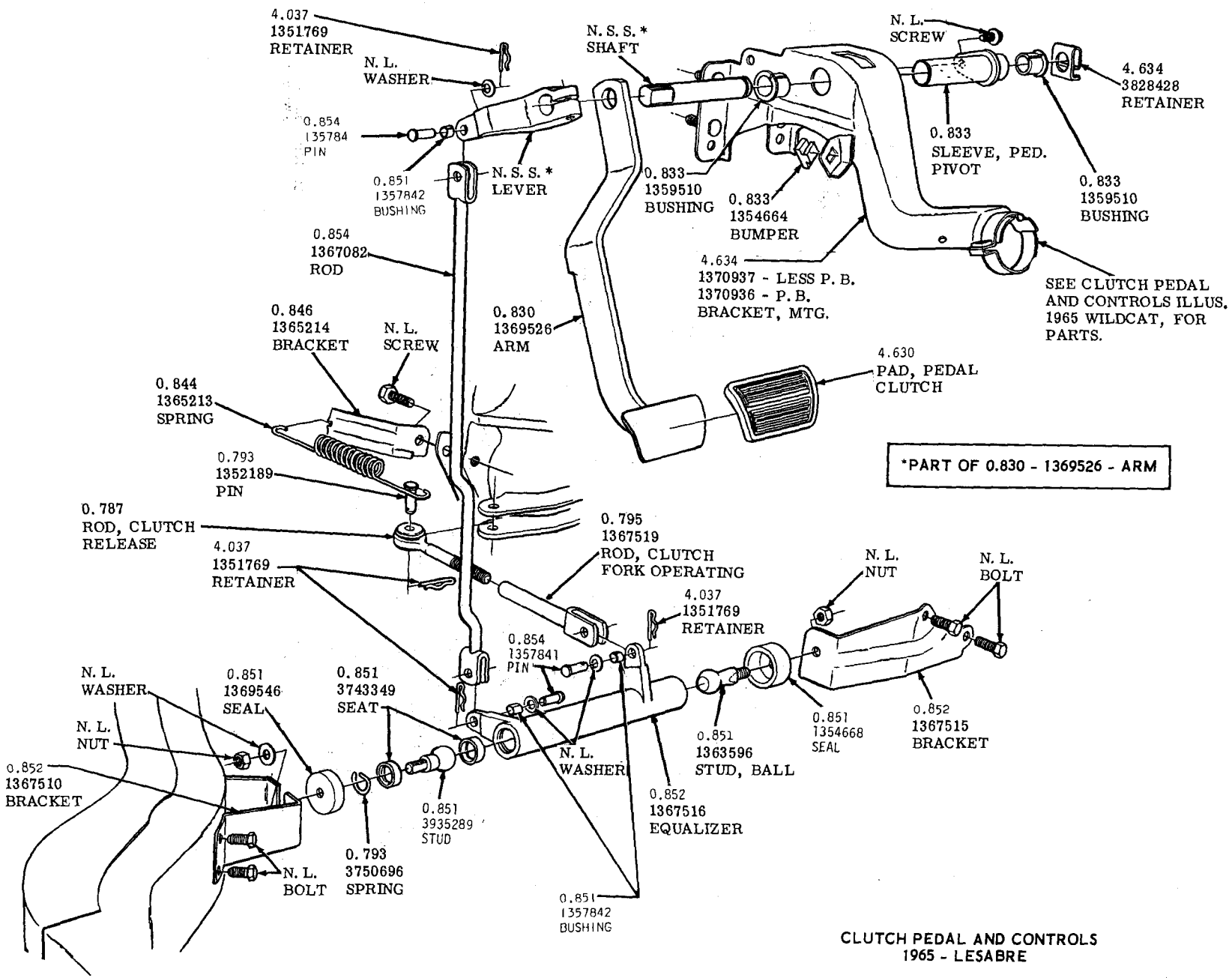

CLUTCH PEDAL AND CONTROLS
1965 - LESABRE

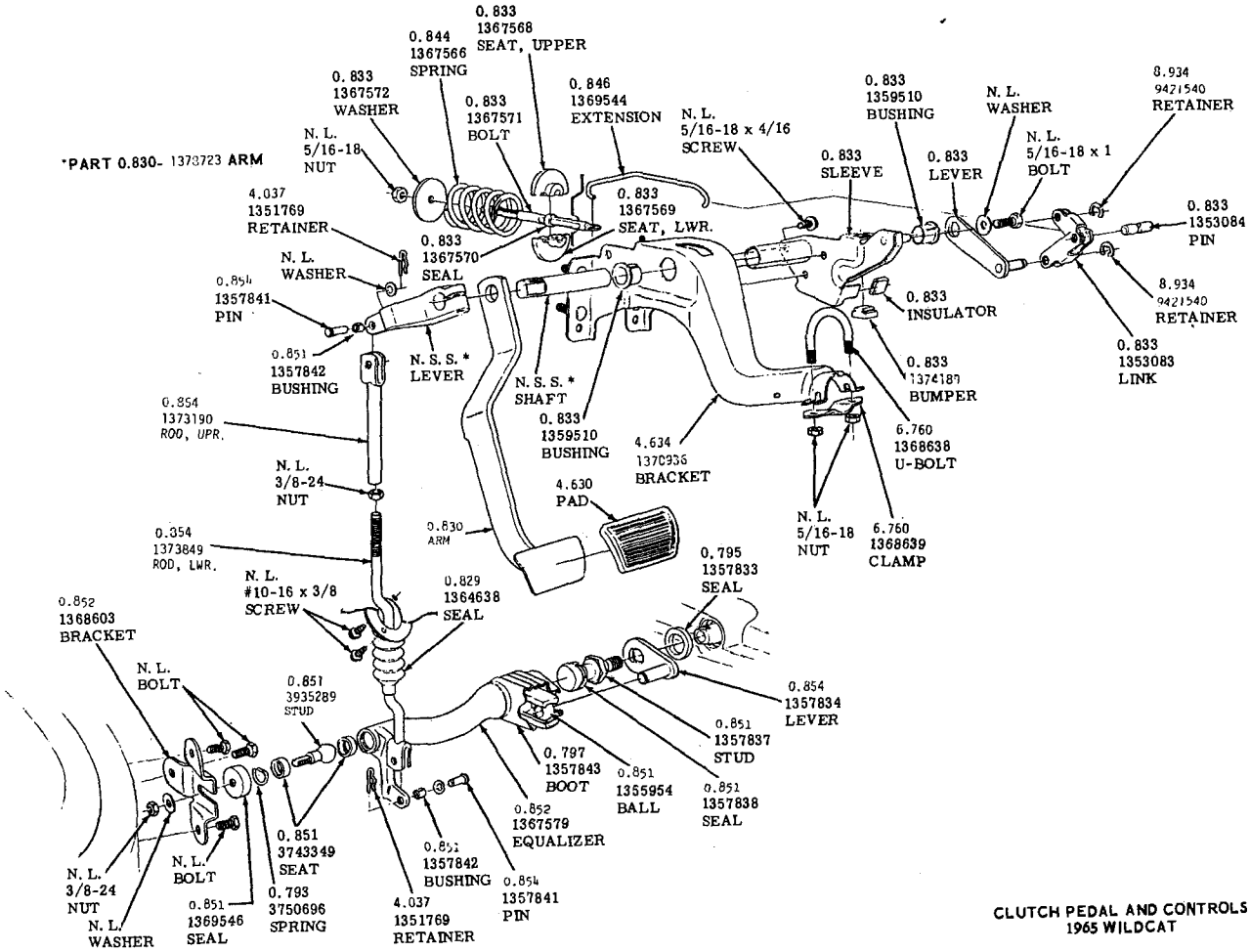

CLUTCH PEDAL AND CONTROLS
1965 WILDCAT

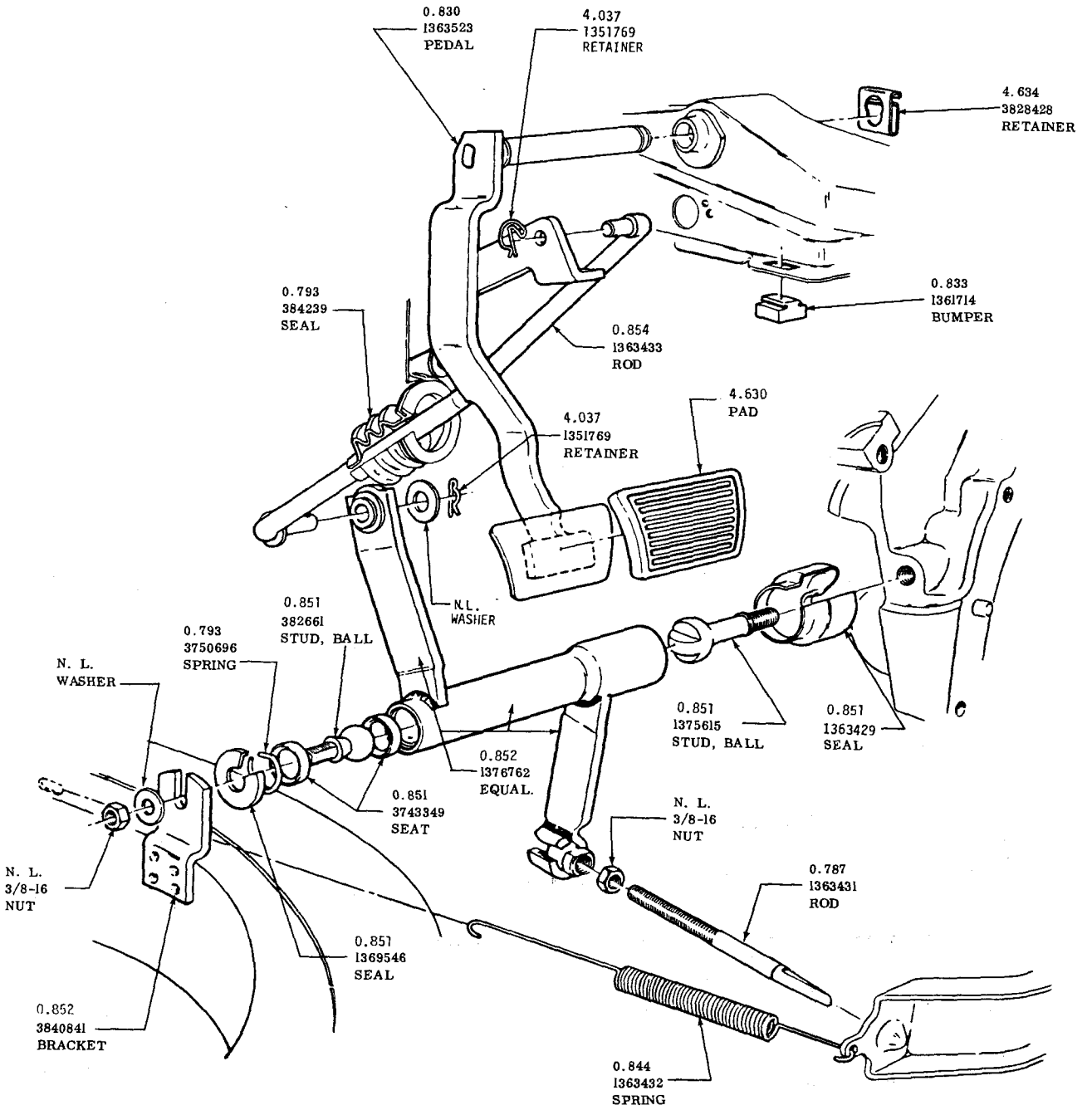

CLUTCH PEDAL AND CONTROLS
1966-SPECIAL-SKYLARK (LESS GRAN SPORT)

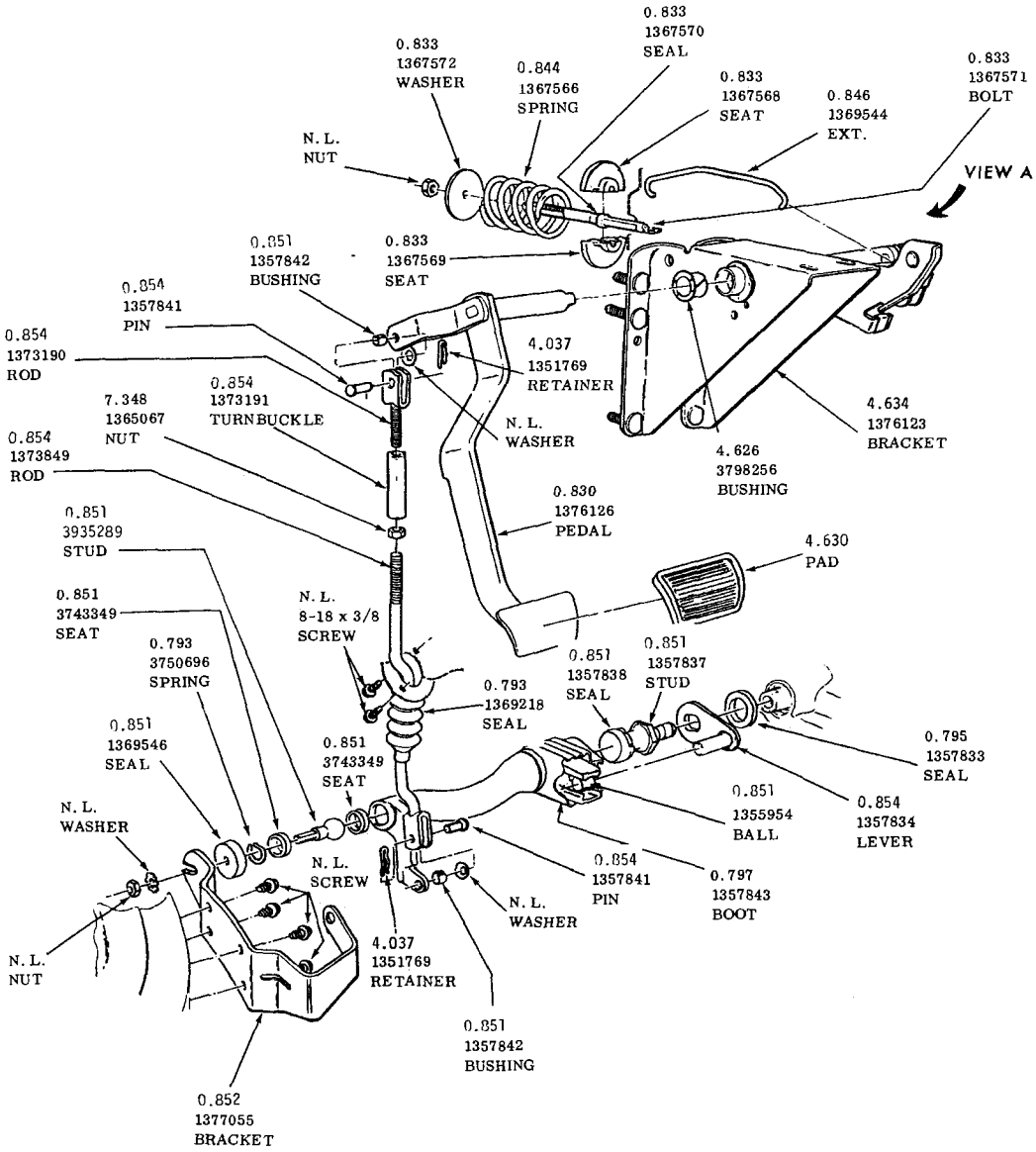

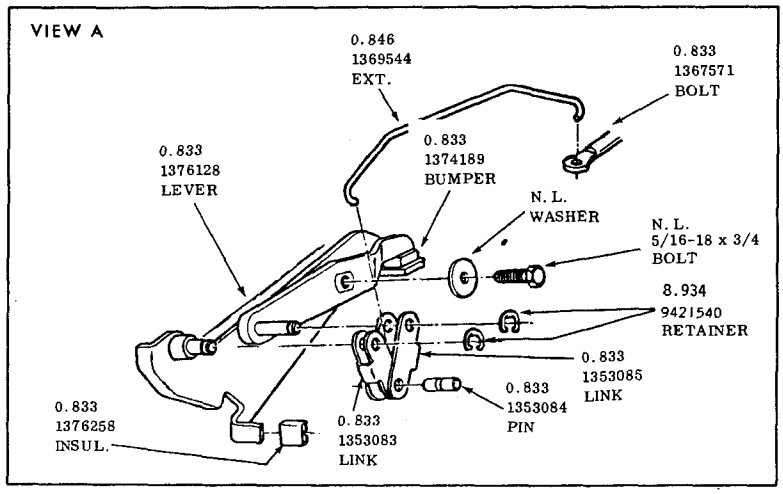

CLUTCH PEDAL
1966—WILDCAT

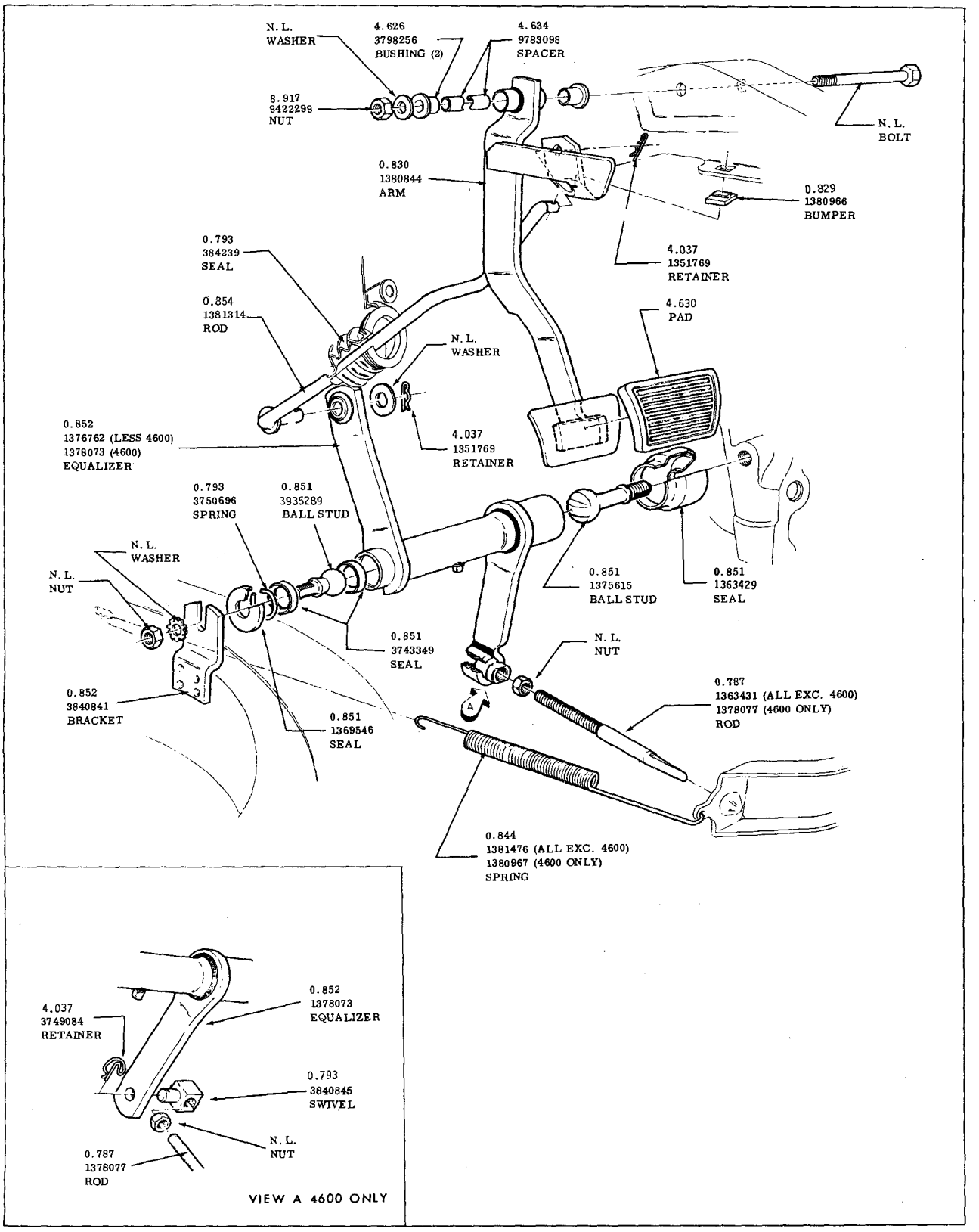

CLUTCH PEDAL AND CONTROLS
1967—SPECIAL—SKYLARK—SKYLARK G.S.

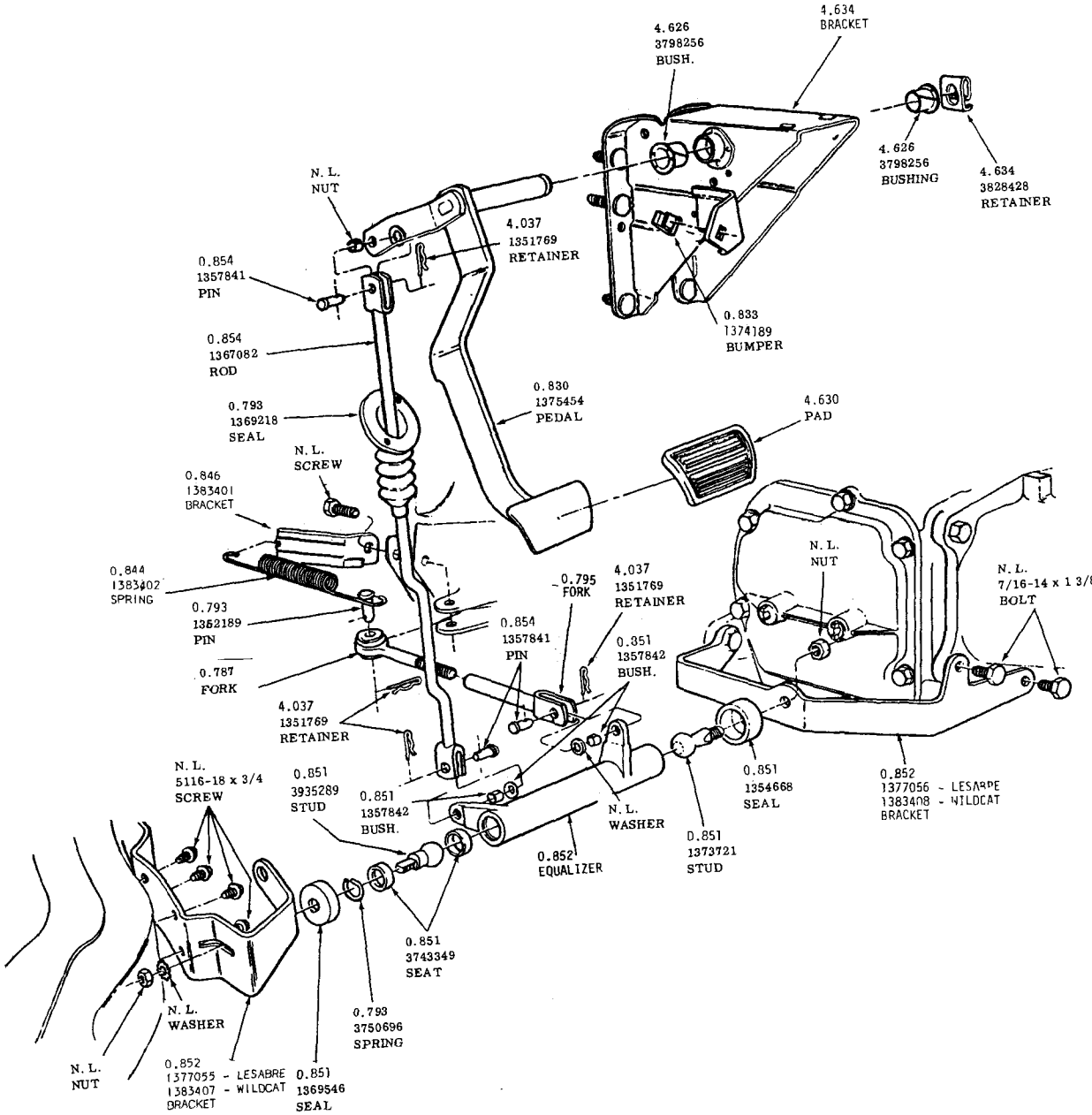

CLUTCH PEDAL
1967-1968-LESABRE
1968-WILDCAT

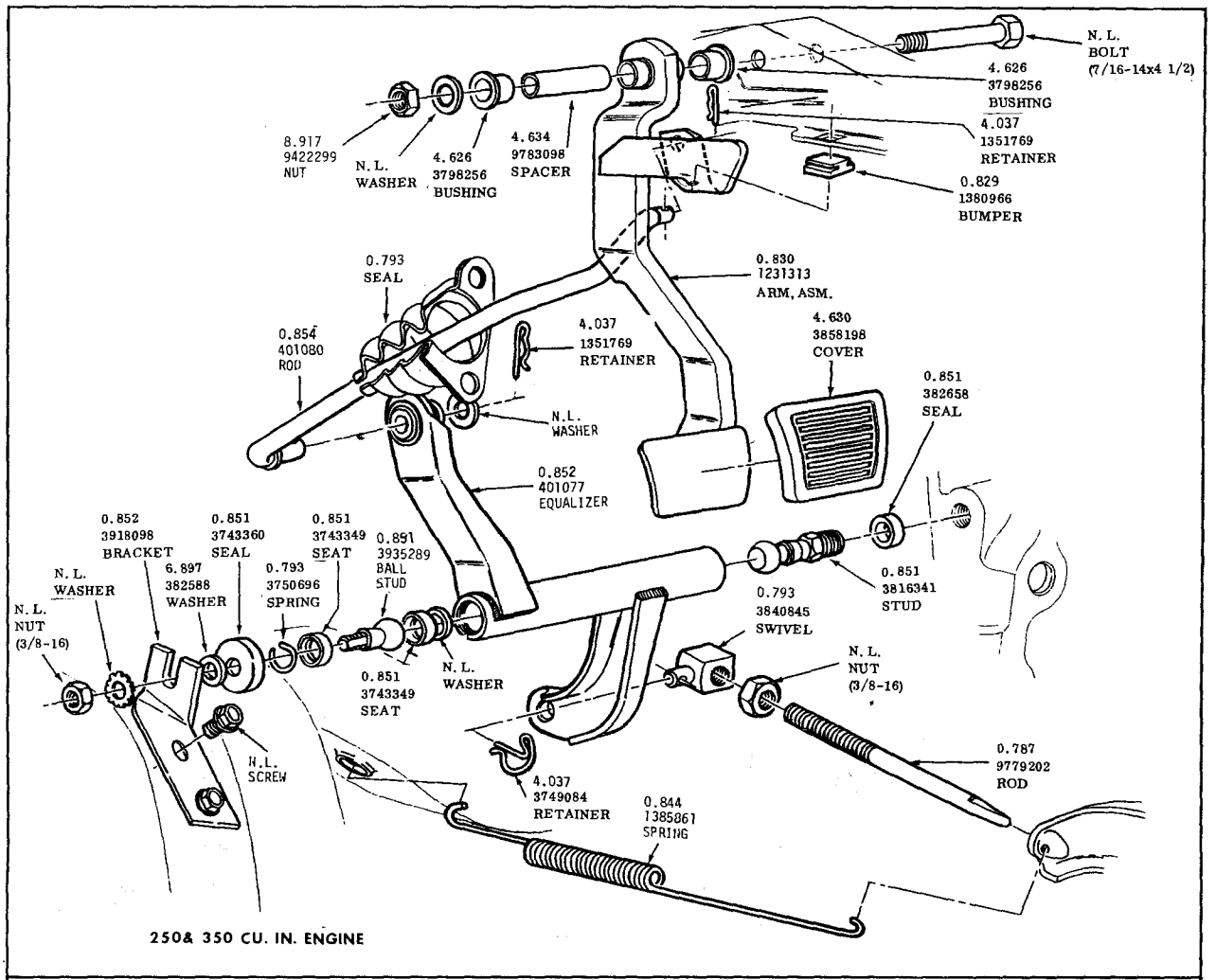

250& 350 CU. IN. ENGINE

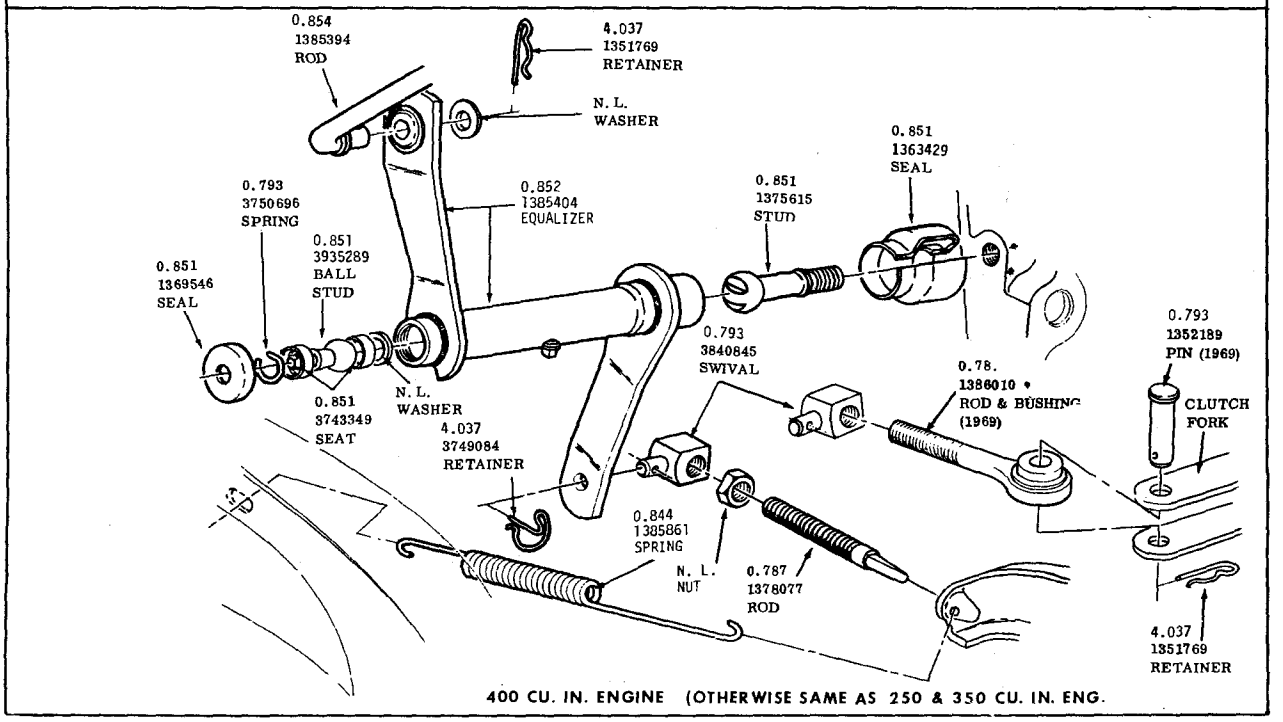

400 CU. IN. ENGINE (OTHERWISE SAME AS 250 & 350 CU. IN. ENG.

CLUTCH PEDAL & CONTROLS
1968-1970 SPECIAL - SKYLARK - GS 400

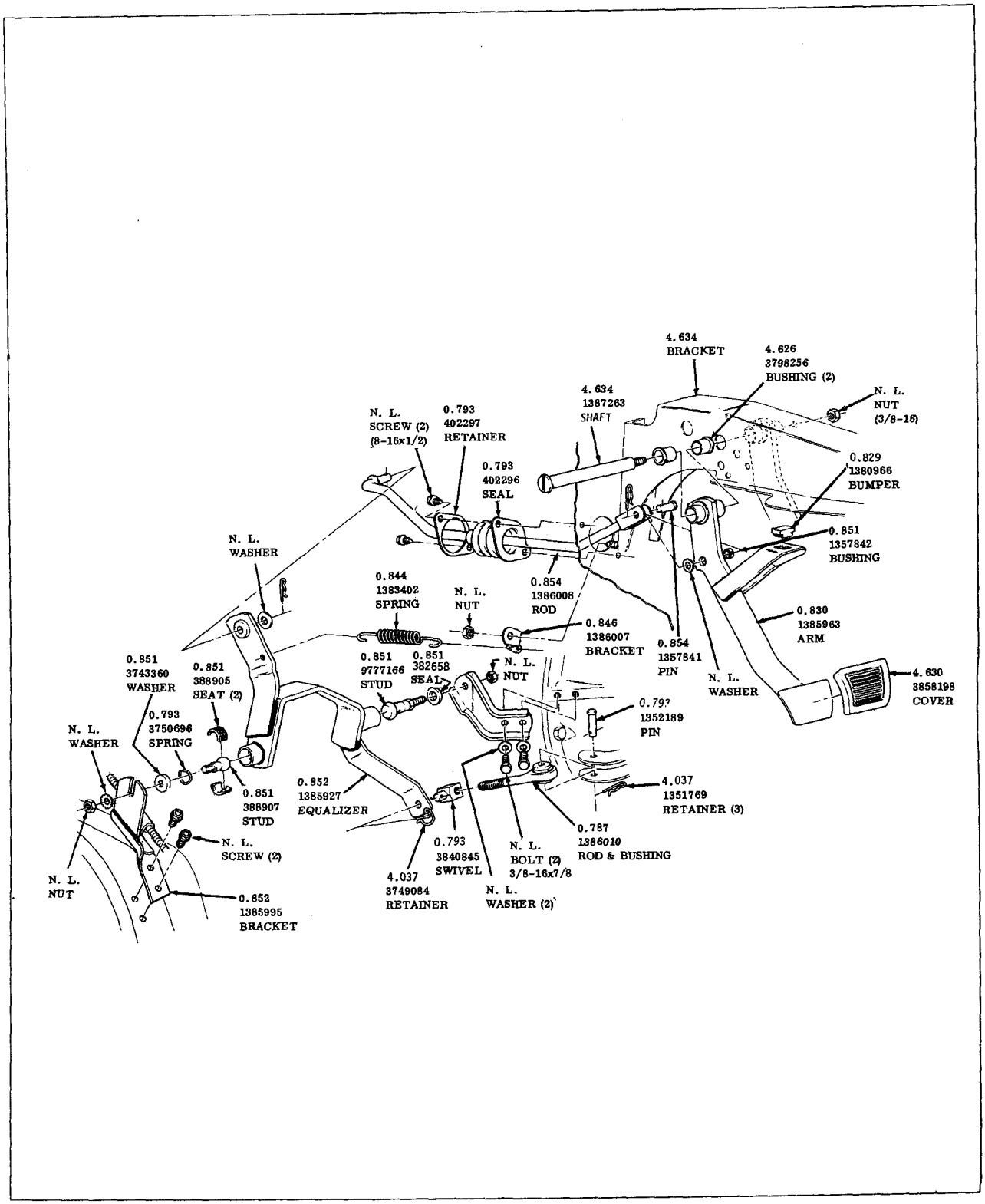

CLUTCH PEDAL
1969-1970 -LESABRE & WILDCAT

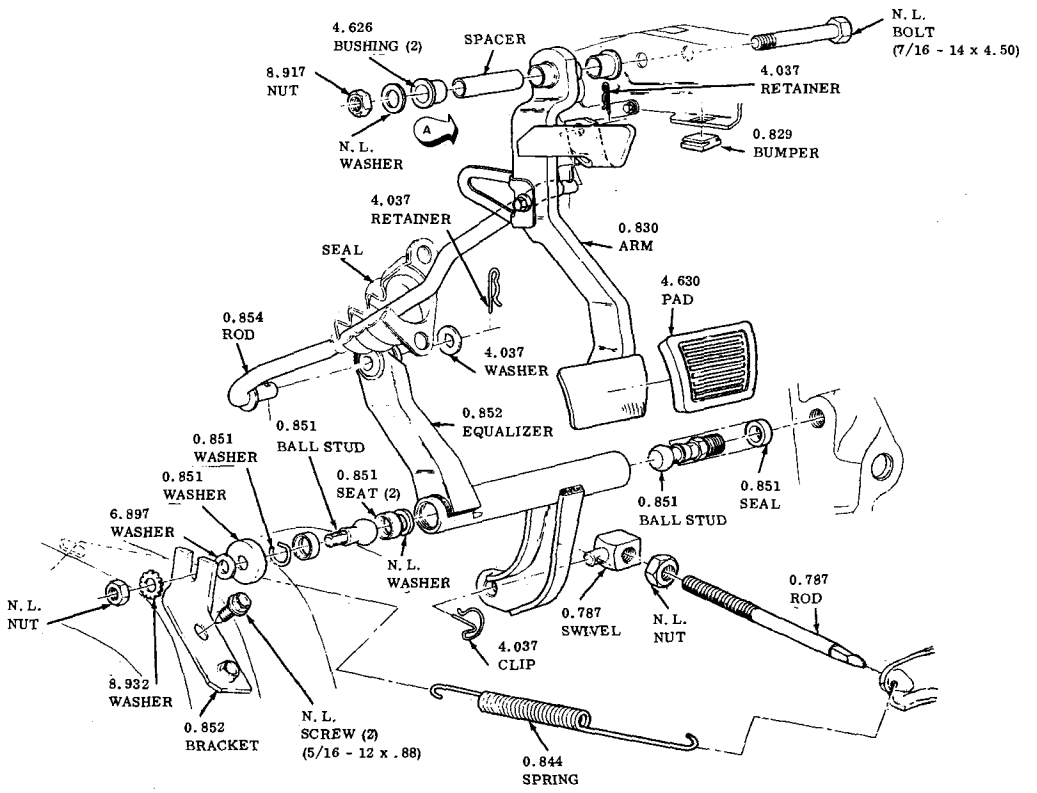

350 CU. IN. ENGINE

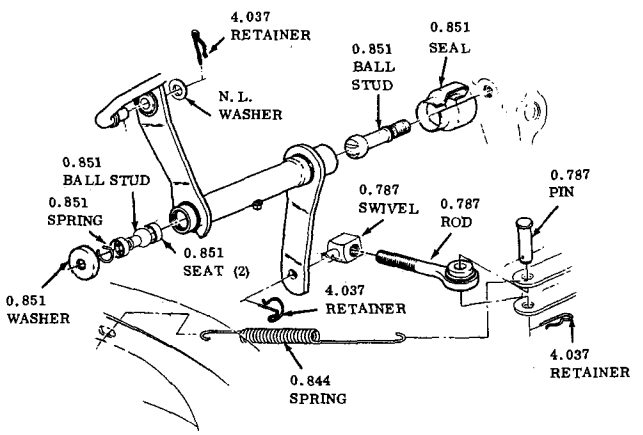

455 CU. IN. ENGINE

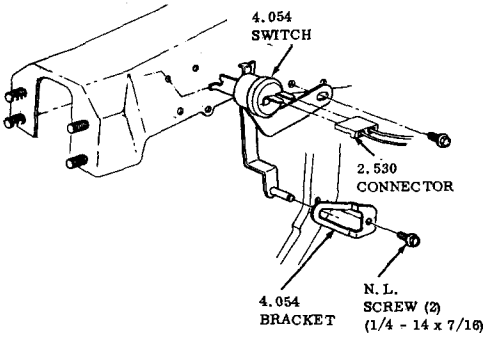

VIEW A

CLUTCH PEDAL
1971-1972 30-4000

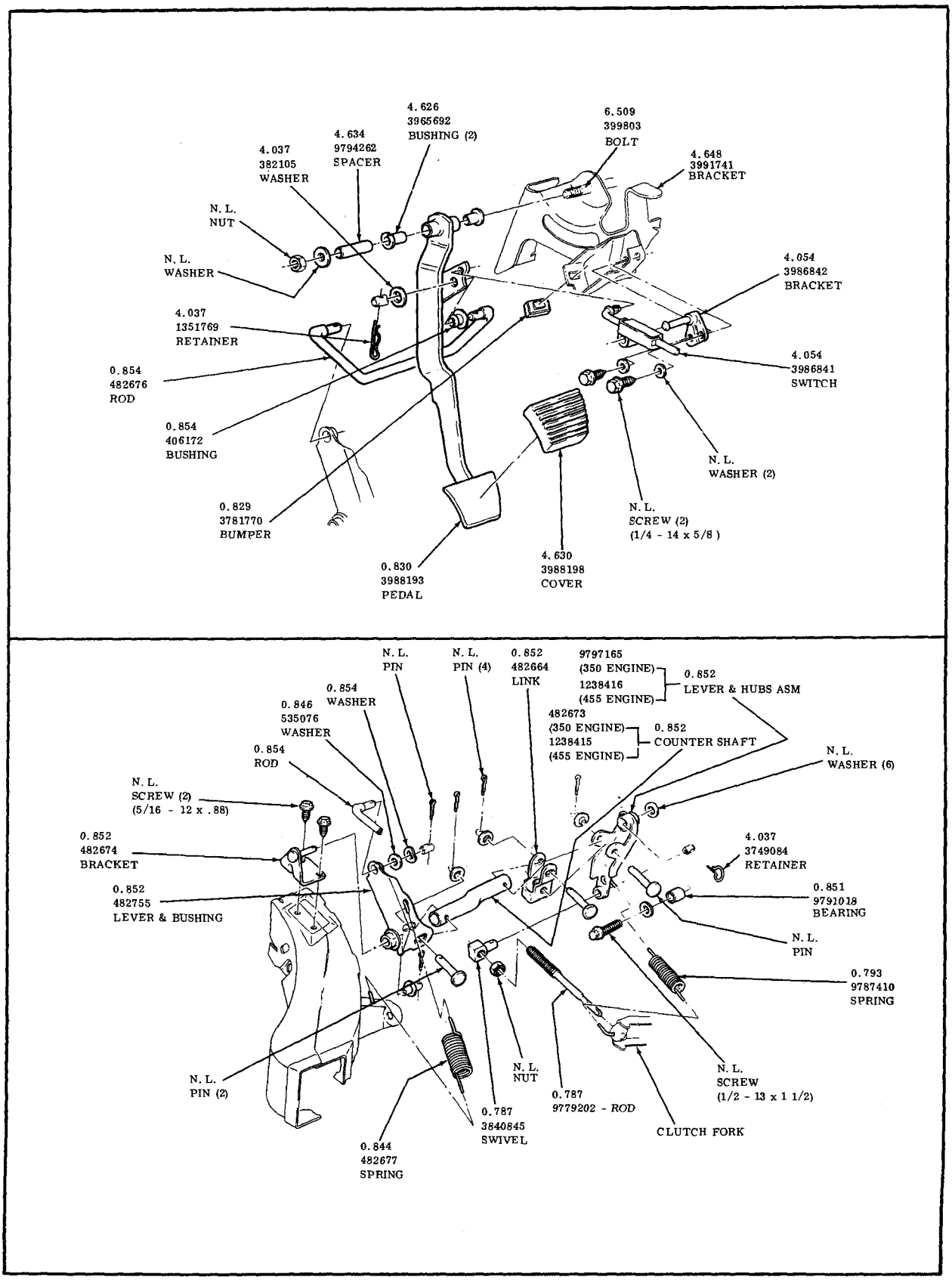

CLUTCH PEDAL AND CONTROLS

1971-50-6000

GROUP 1

ENGINE COOLING AND OILING
RADIATOR GRILLE

MEMORANDA

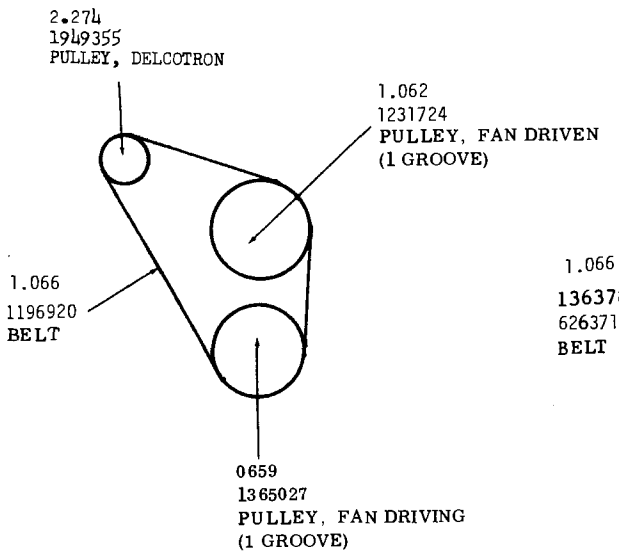

STANDARD

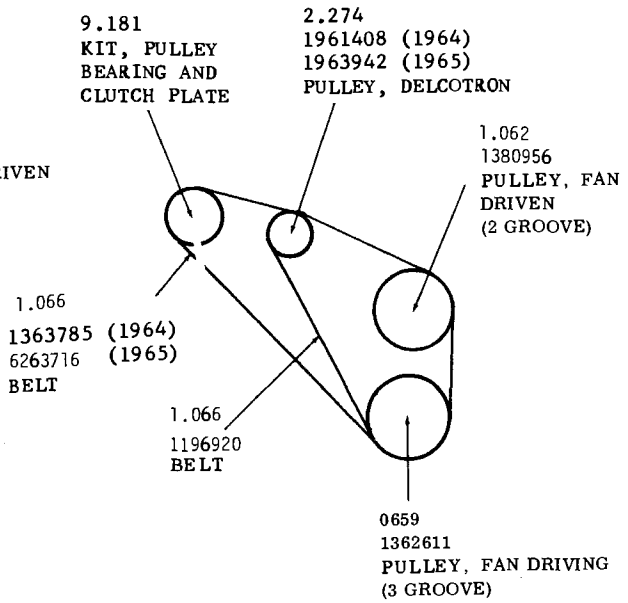

DELCOTRON AND
AIR CONDITIONING

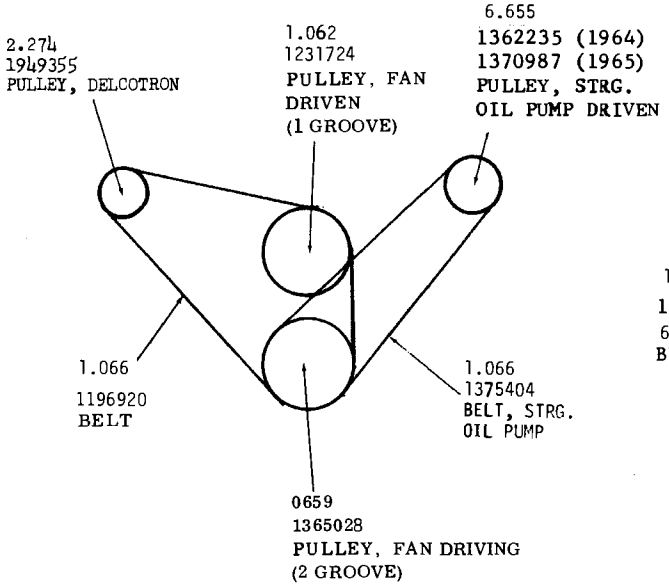

POWER STEERING AND DELCOTRON

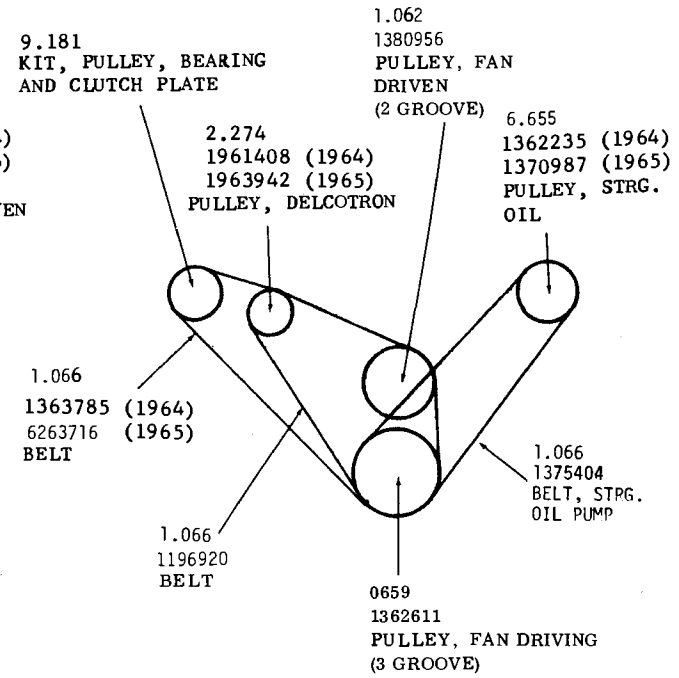

POWER STEERING, DELCOTRON
AND AIR CONDITIONING

PULLEY AND BELT CHART

1964-1965 - SPECIAL - SKYLARK - LESABRE

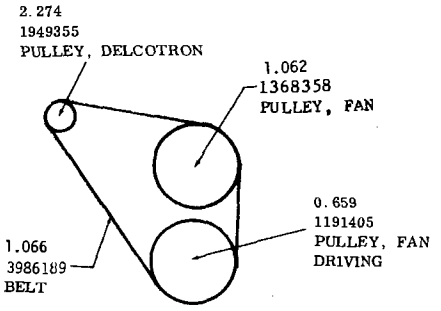

STANDARD
(1964 4600 WITH 401 CU. IN. ENGINE)
1964-1965 WILDCAT

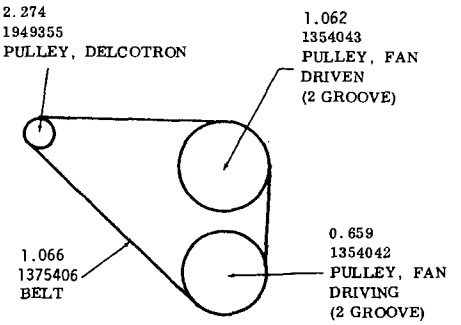

STANDARD
(1964 4600 WITH 425 CU. IN. ENGINE)
1964-1965 WILDCAT

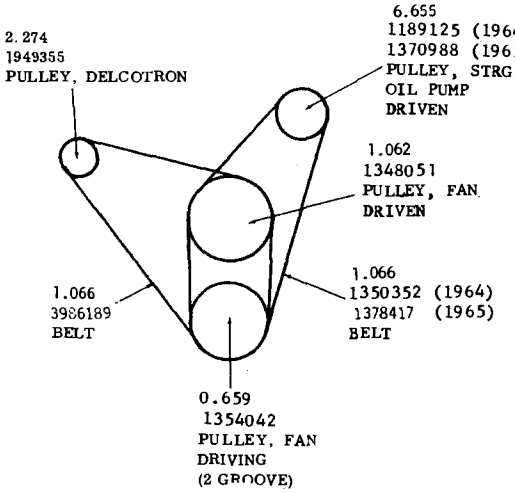

DELCOTRON AND POWER STEERING
(1964 4600—4800 WITH 401 CU. IN. ENGINE)
1964-1965 - WILDCAT, ELECTRA 225

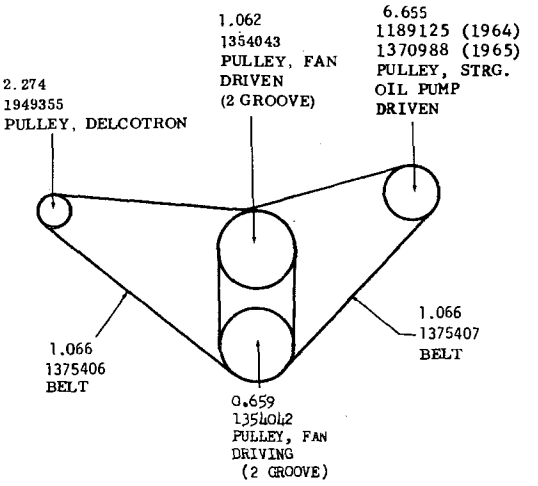

DELCOTRON AND POWER STEERING
(1964 4600—4700 WITH 425 CU. IN. ENGINE)
1964-1965 - WILDCAT, RIVIERA

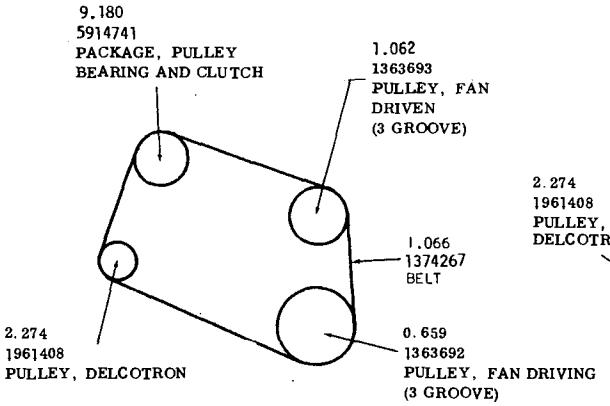

DELCOTRON AND AIR CONDITIONING
(1964 4600 WITH 401 AND 425 CU. IN. ENGINE)
1964-1965 - WILDCAT

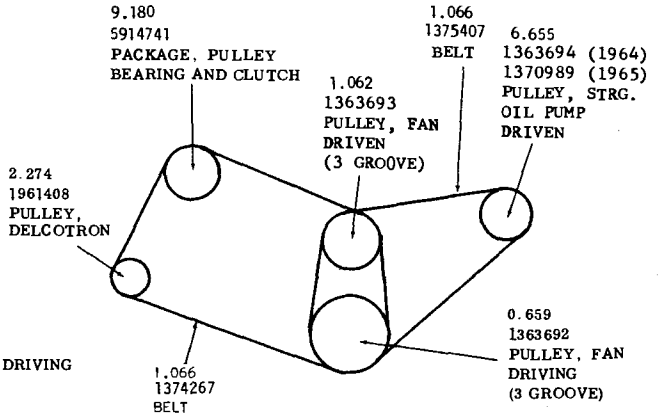

DELCOTRON, AIR CONDITIONING AND POWER STEERING
1964-1965 - WILDCAT - ELECTRA 225 - RIVIERA
WITH 401 AND 425 CU. IN. ENGINE)

PULLEY AND BELT CHART
1964-1965 - WILDCAT - ELECTRA 225 - RIVIERA

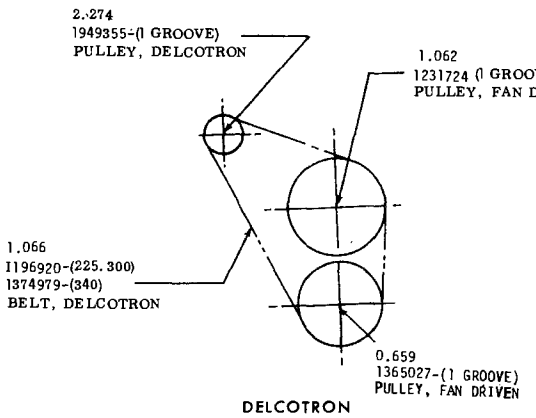

DELCOTRON

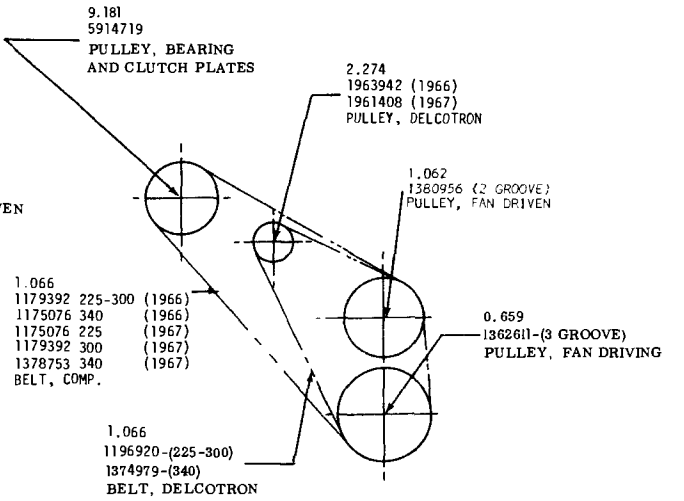

DELCOTRON AND AIR CONDITIONING

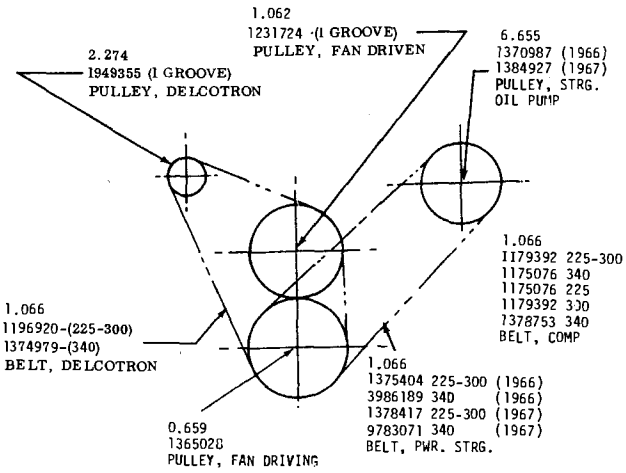

POWER STEERING AND DELCOTRON

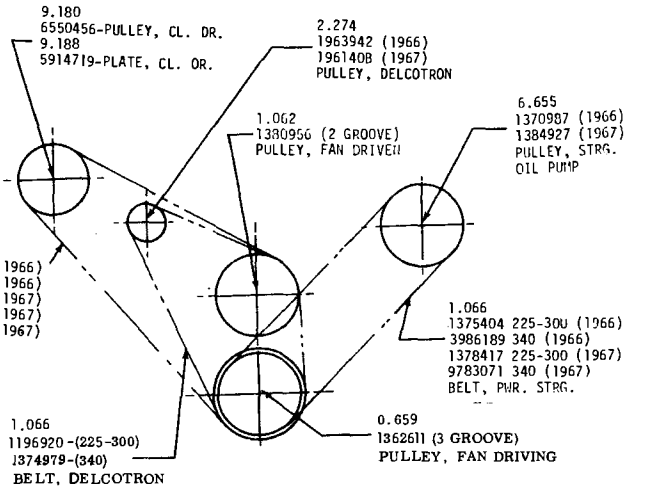

POWER STEERING, DELCOTRON AND AIR CONDITIONING

PULLEY AND BELT CHART

1966-1967—SPECIAL—SKYLARK—LESABRE

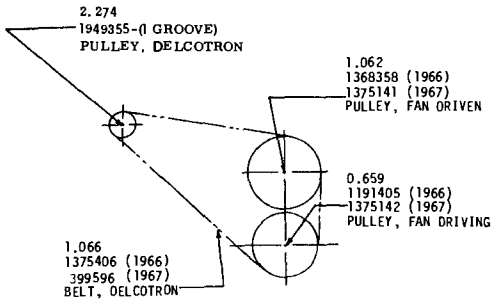

DELCOTRON

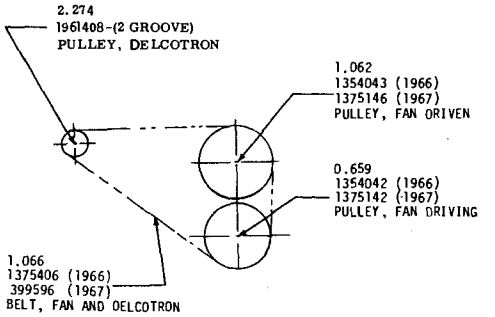

DELCOTRON AND AIR COND. MODIFICATION

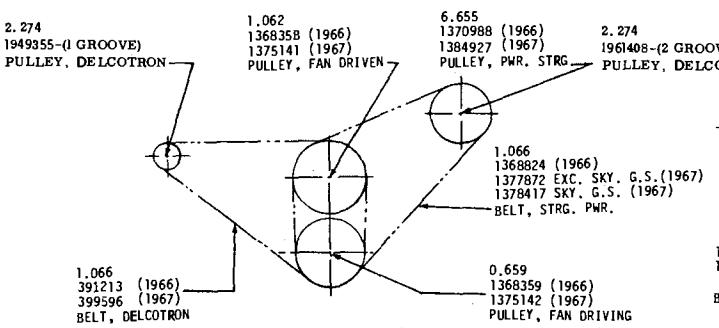

DELCOTRON AND POWER STEERING

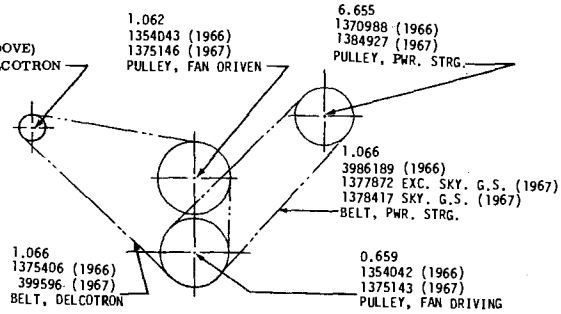

DELCOTRON, POWER STEERING AND
AIR CONDITIONING MODIFICATION

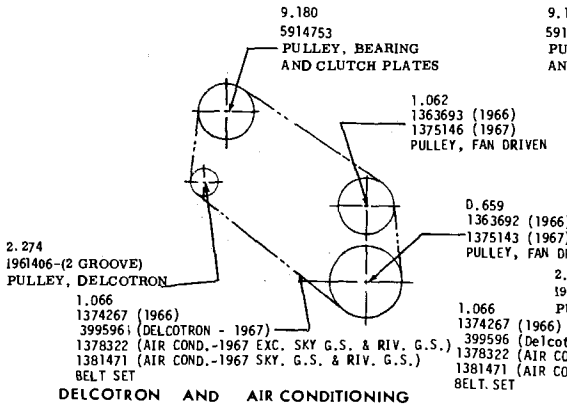

DELCOTRON AND AIR CONDITIONING

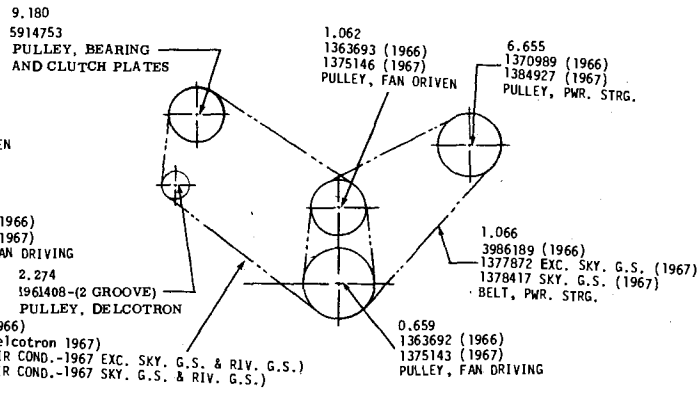

DELCOTRON, POWER STEERING AND
AIR CONDITIONING

PULLEY AND BELT CHART
1966-1967 —SKYLARK G.S.—WILDCAT—ELECTRA 225—RIVIERA

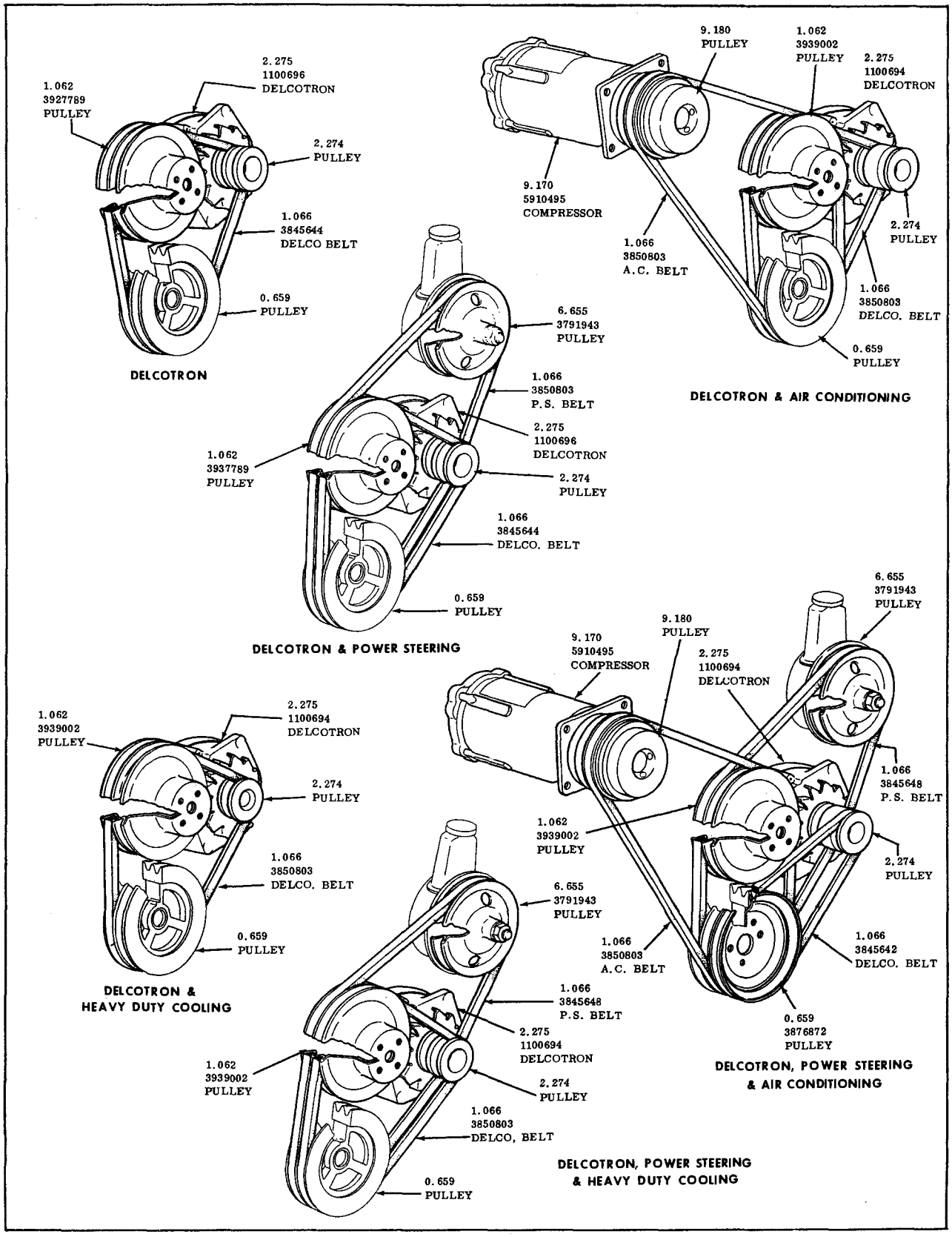

PULLEYS & BELTS
250 CU. IN. ENG.
1970-ALL

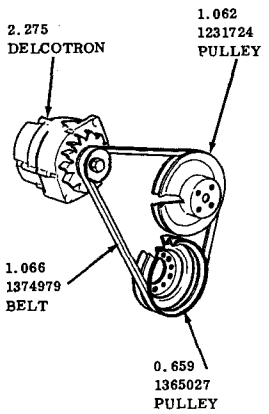

DELCOTRON

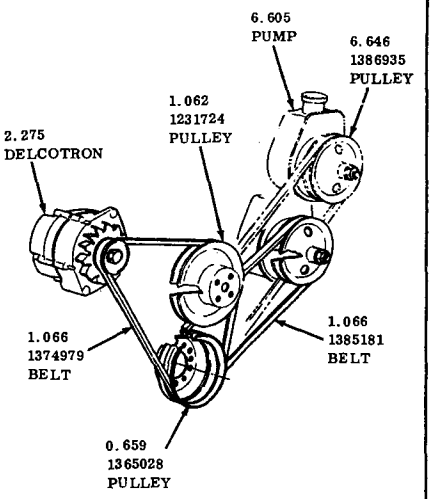

DELCOTRON & POWER STEERING

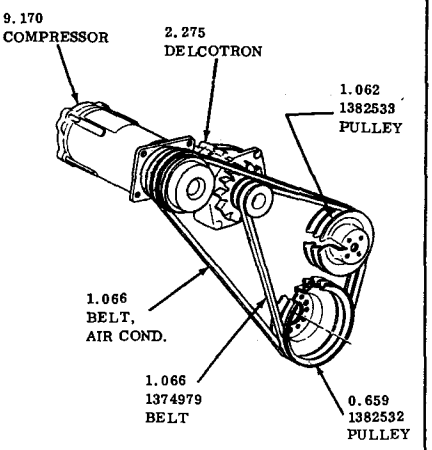

DELCOTRON & AIR CONDITIONING

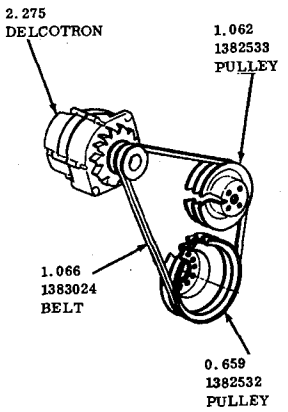

DELCOTRON
& HEAVY DUTY COOLING

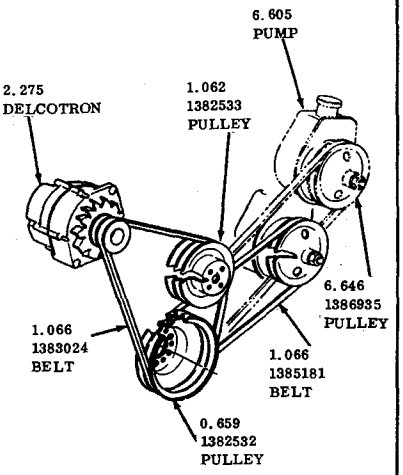

DELCOTRON, PWR. STEERING,
& H.D. COOLING

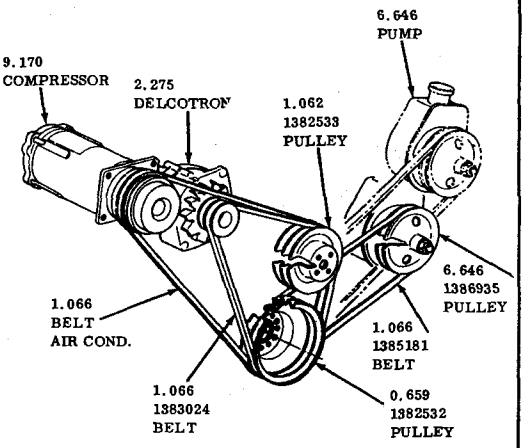

DELCOTRON, PWR. STEERING,
& AIR CONDITIONING

PULLEY AND BELTS
350 CU. IN. ENGINE
1970-ALL

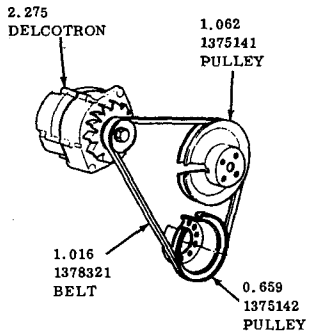

DELCOTRON

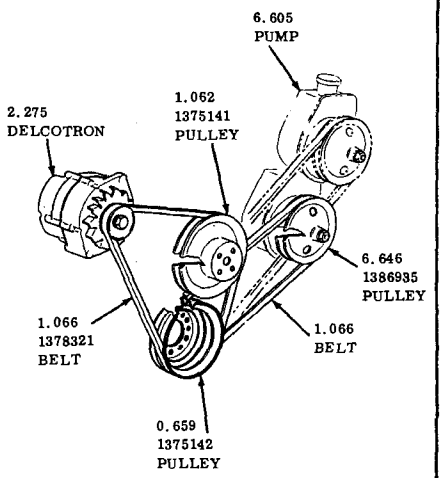

DELCOTRON & PWR. STEERING

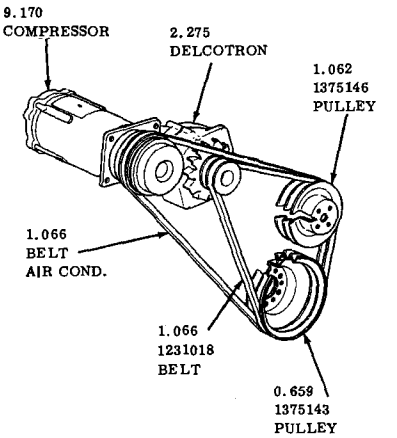

DELCOTRON & AIR CONDITIONING

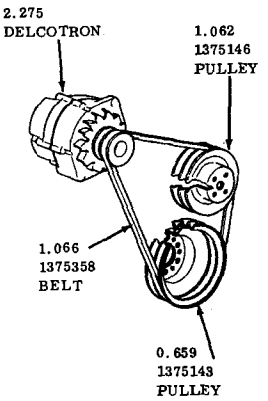

DELCOTRON & H.D. COOLING

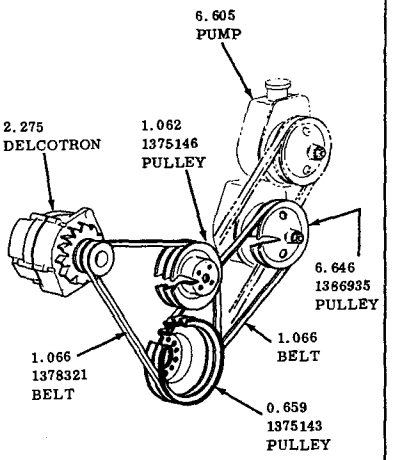

DELCOTRON, PWR. STEERING, & H.D. COOLING

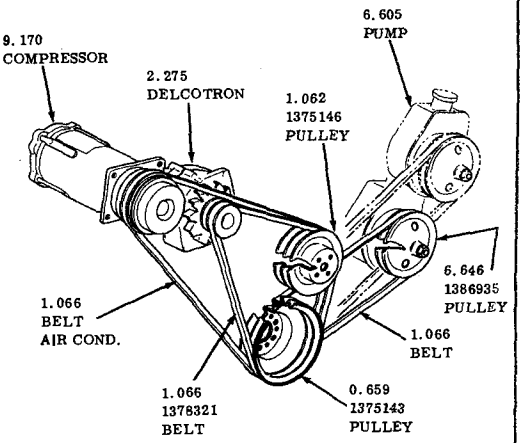

DELCOTRON, PWR. STEERING, & AIR CONDITIONING

PULLEY AND BELT
455 CU. IN. ENGINE
1970-ALL

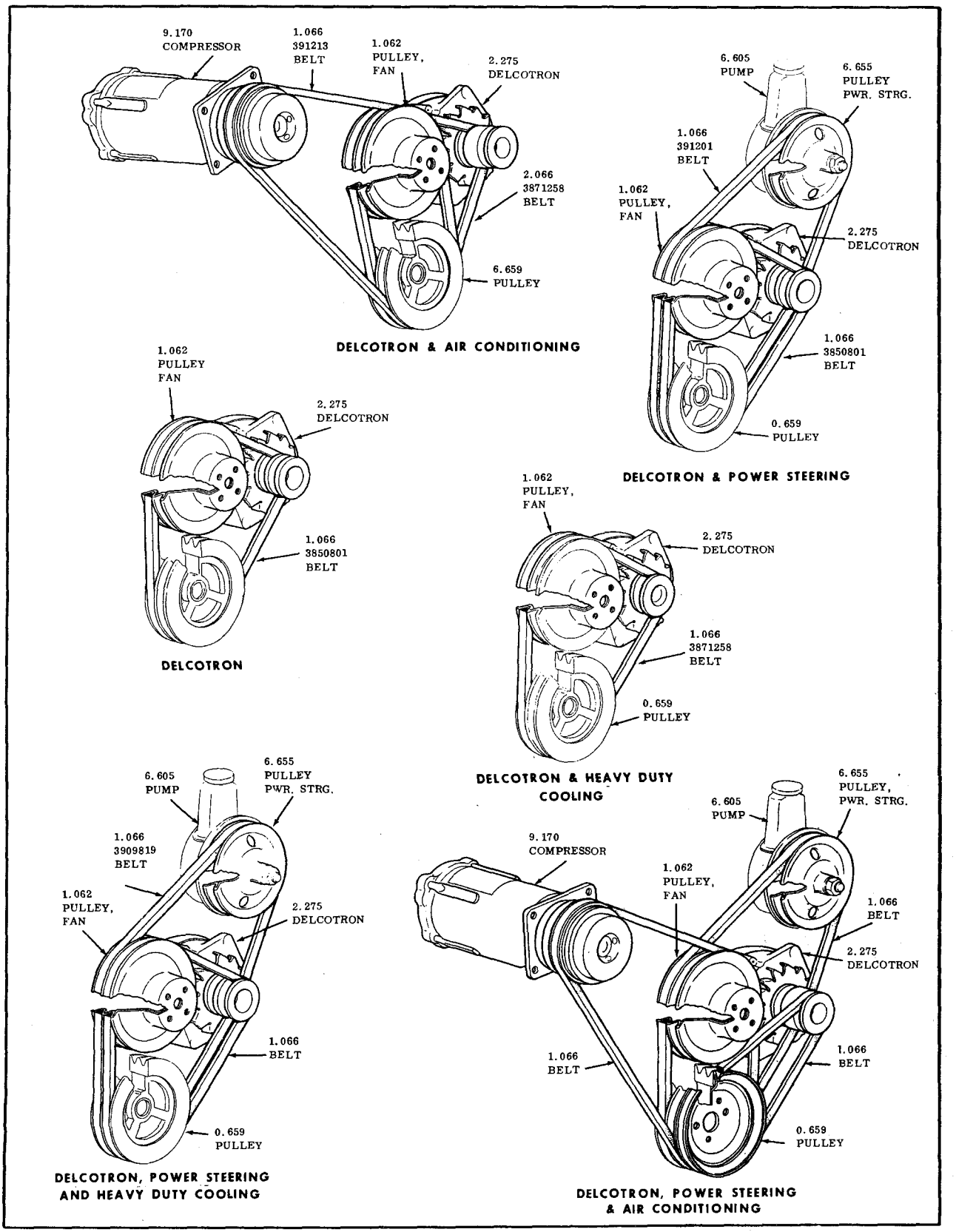

PULLEYS AND BELTS
250 CU. IN. ENGINE
1971-30-4000

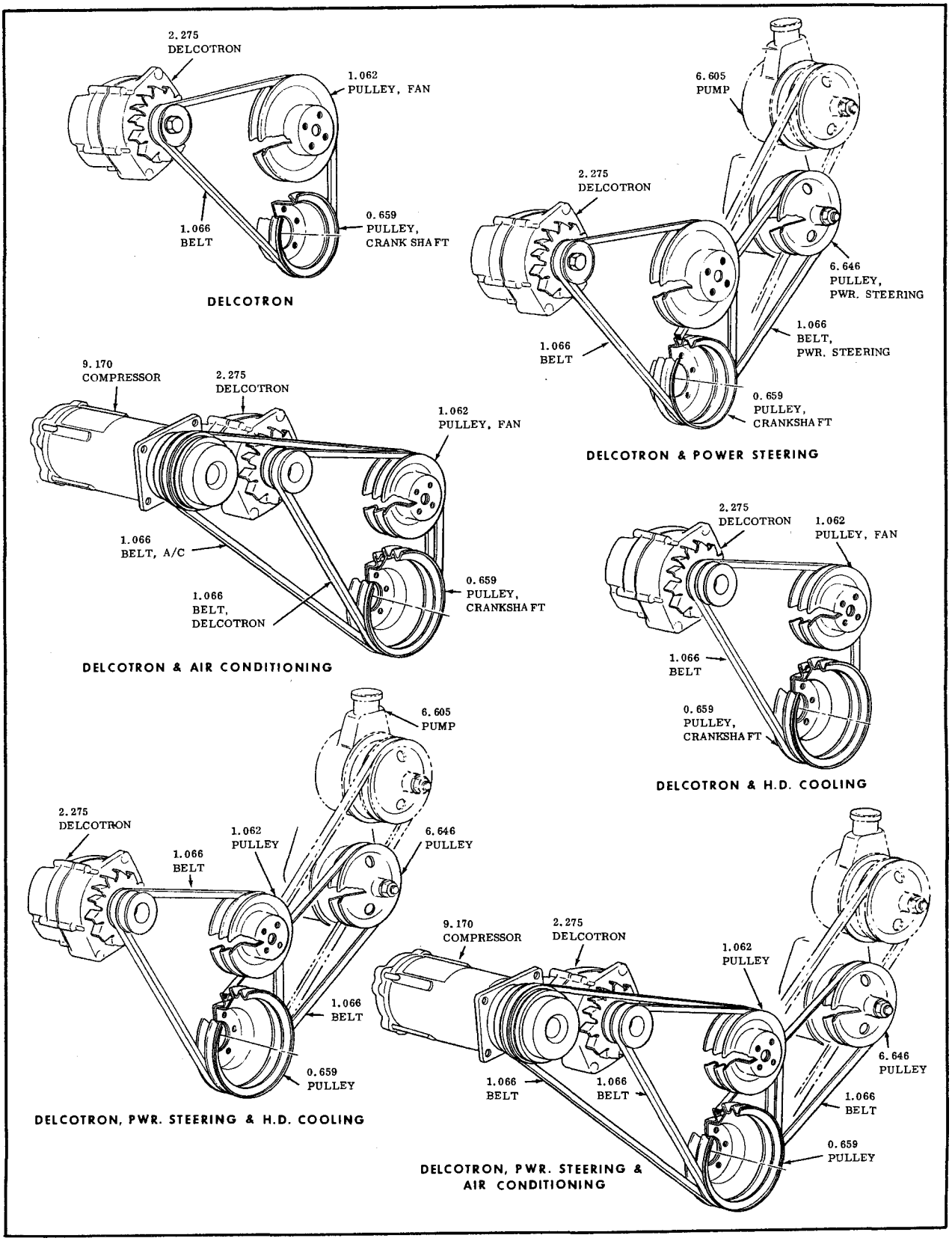

PULLEYS AND BELTS
350 CU. IN. ENGINE
1971-30-40-5000

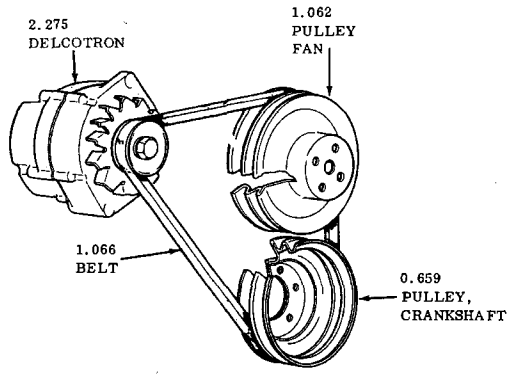

DELCOTRON

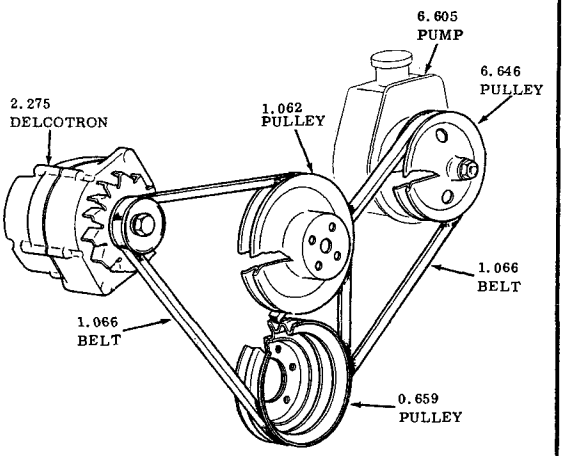

DELCOTRON & POWER STEERING

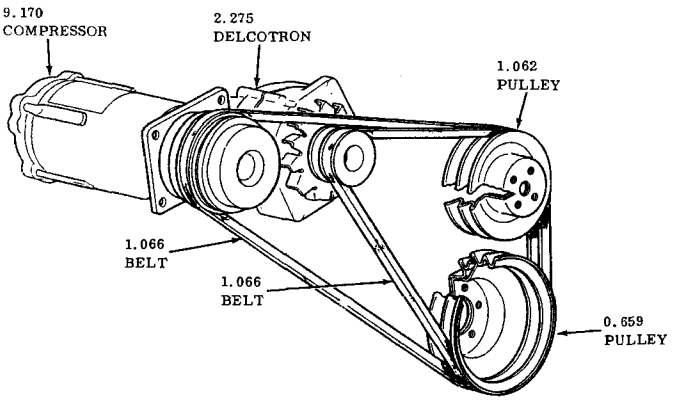

DELCOTRON & AIR CONDITIONING

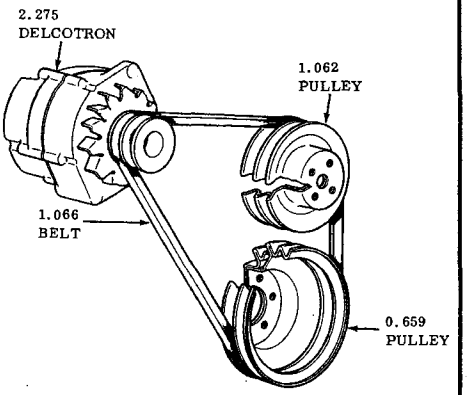

DELCOTRON & H.D. COOLING

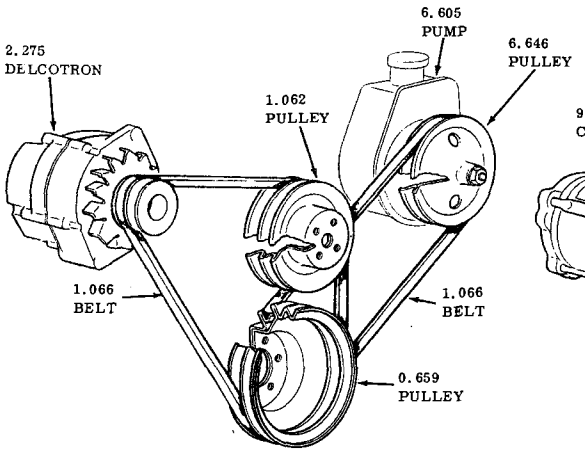

DELCOTRON, POWER STEERING & H.D. COOLING

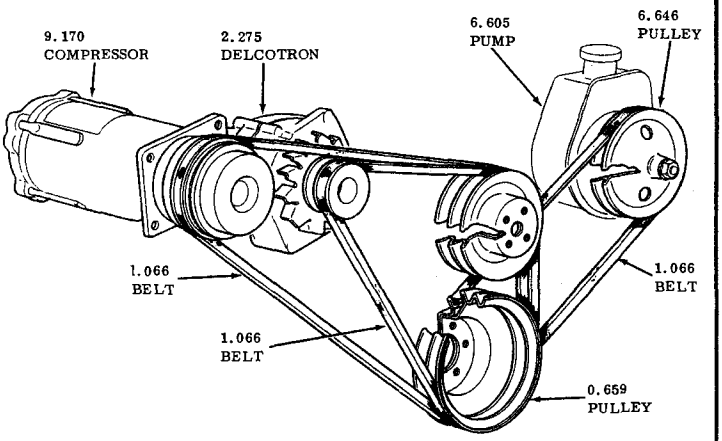

DELCOTRON, PWR. STEERING & AIR CONDITIONING

PULLEYS AND BELTS
455 CU. IN. ENGINE
1971 - ALL

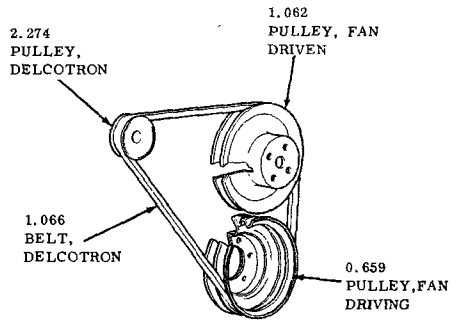

STANDARD

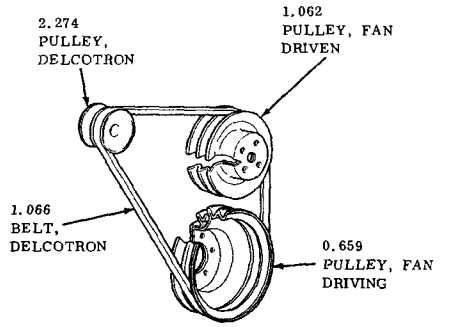

HEAVY DUTY COOLING

PULLEY& BELTS (30-4000 AUTO. TRANS. LESS PWR. SRG. , AIR COND. & A.I.R.) 350 ENGINE

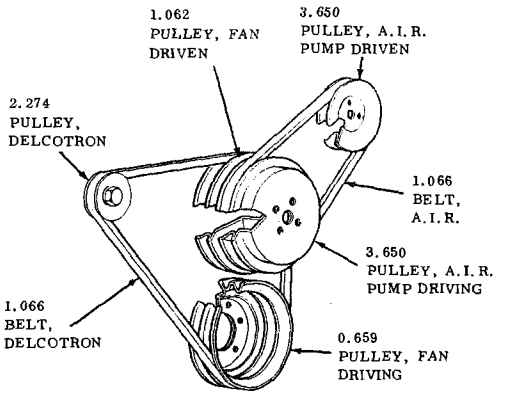

STANDARD

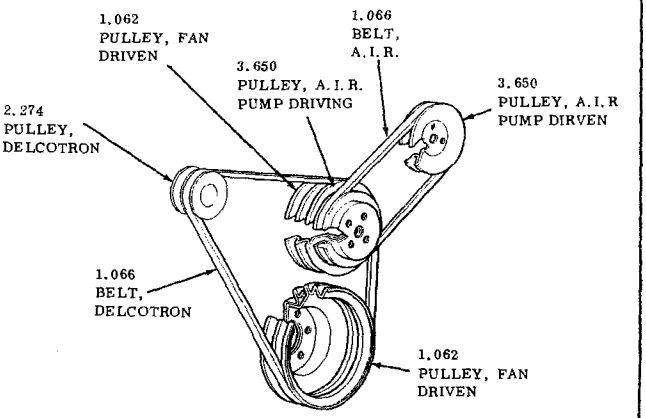

HEAVY DUTY COOLING

PULLEY & BELTS (30-4000 A.I.R. LESS PWR. STRG. & AIR COND.) 350- 455 ENGINES

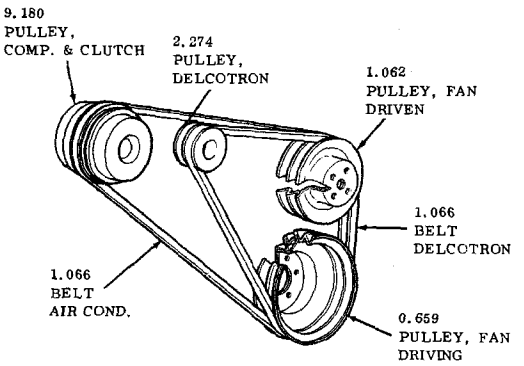

PULLEY & BELTS (30-4000 AUTO. TRANS. WITH AIRCOND. LESS A.I.R.) 350 ENGINE

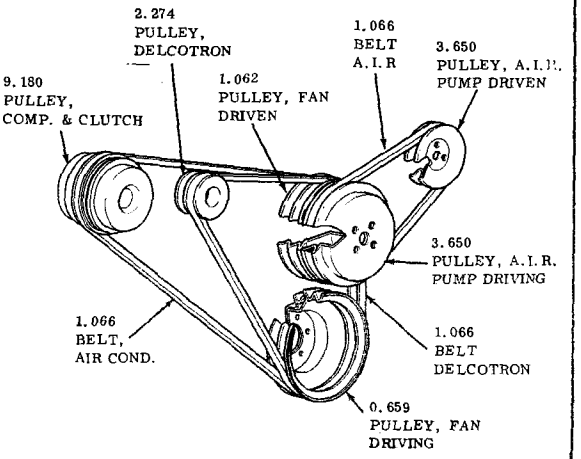

PULLEY & BELTS (30-4000 AIRCOND. WITH A.I.R. LESS PWR. STRG.) 350-455 ENGINES

PULLEYS AND BELTS
(LESS POWER STEERING)
350-455 ENGINES
1972-30-4000

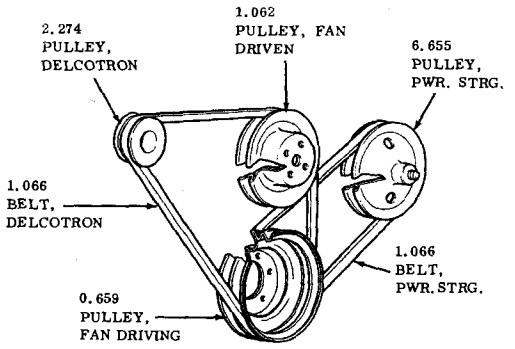

STANDARD

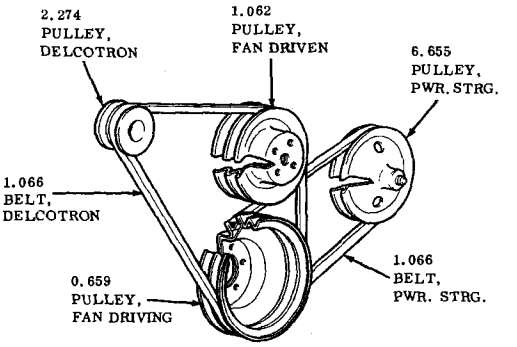

HEAVY DUTY COOLING

PULLEY & BELTS (POWER STEERING LESS AIR CONDITIONING & A.I.R.) 350 ENGINE

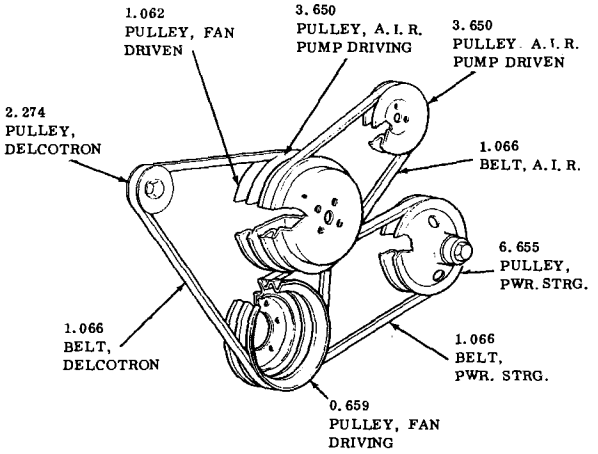

STANDARD

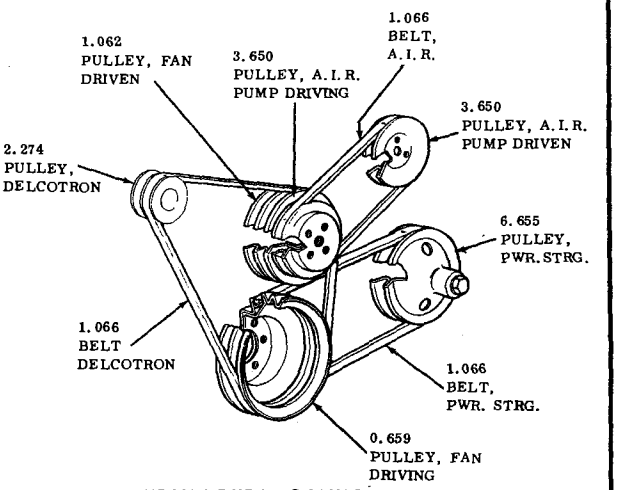

HEAVY DUTY COOLING

PULLEY & BELTS (POWER STEERING WITH A.I.R.) 350-455 ENGINE

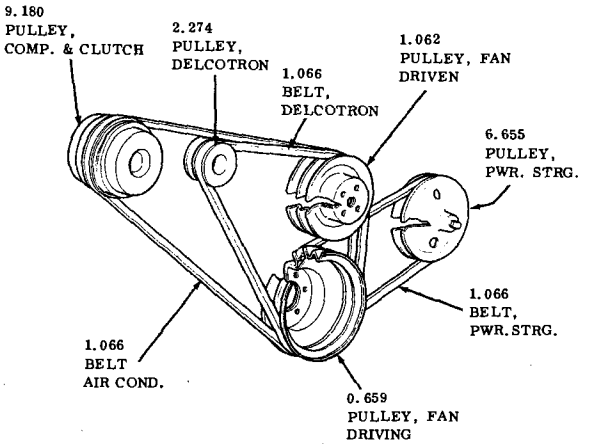

PULLEY & BELTS (PWR. STRG. &
AIR COND. LESS A.I.R.) 350 ENGINE

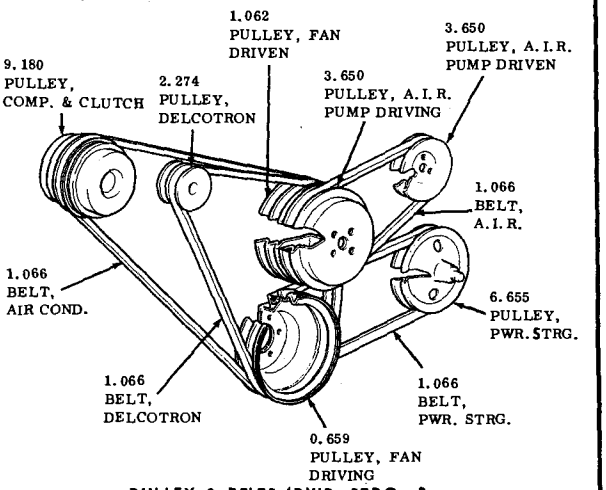

PULLEY & BELTS (PWR. STRG. &
AIR COND. WITH A.I.R.) 350-455 ENGINE

PULLEYS AND BELTS
(WITH POWER STEERING)
350-455 ENGINES
1972-ALL

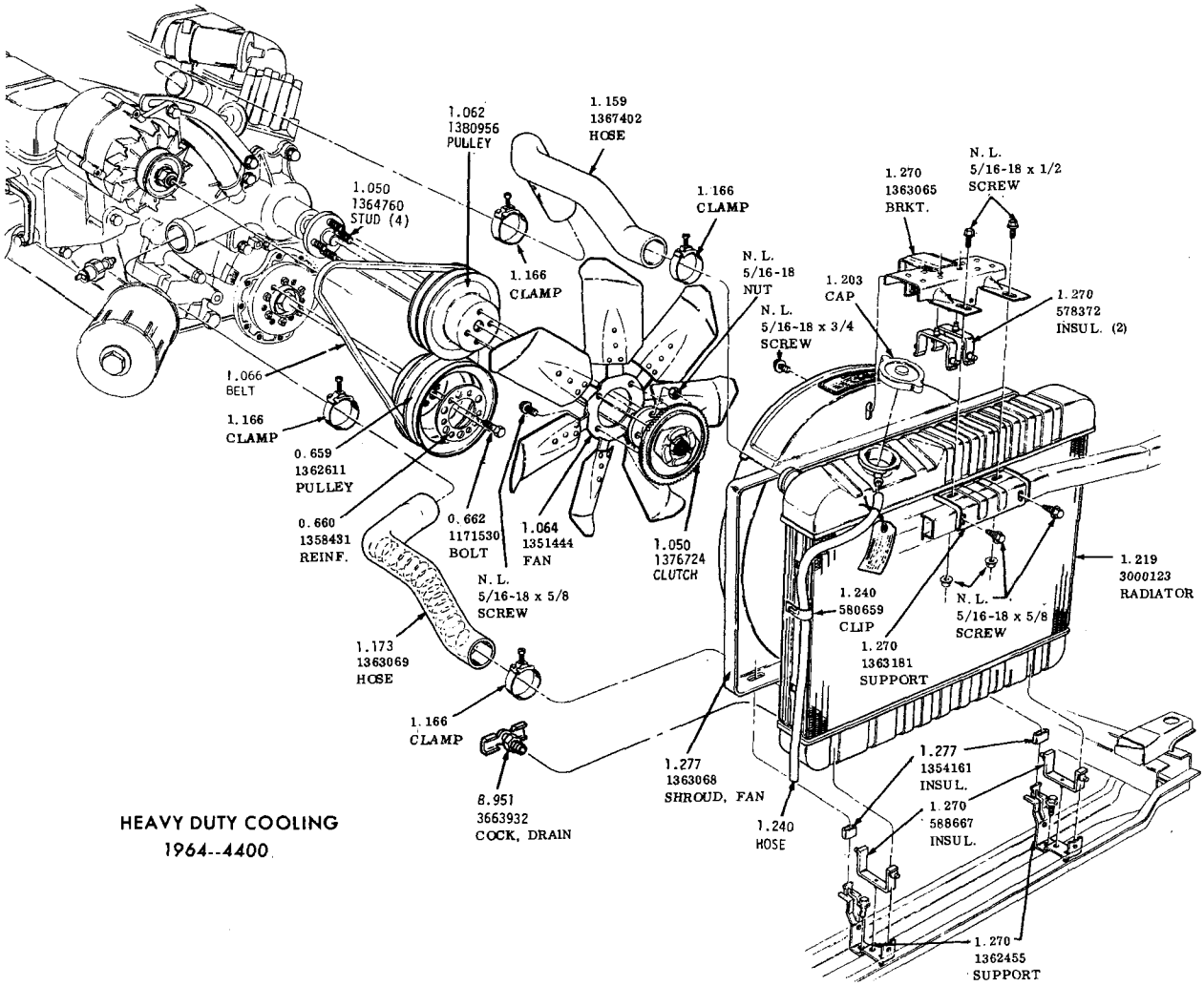

HEAVY DUTY COOLING
1964--4400

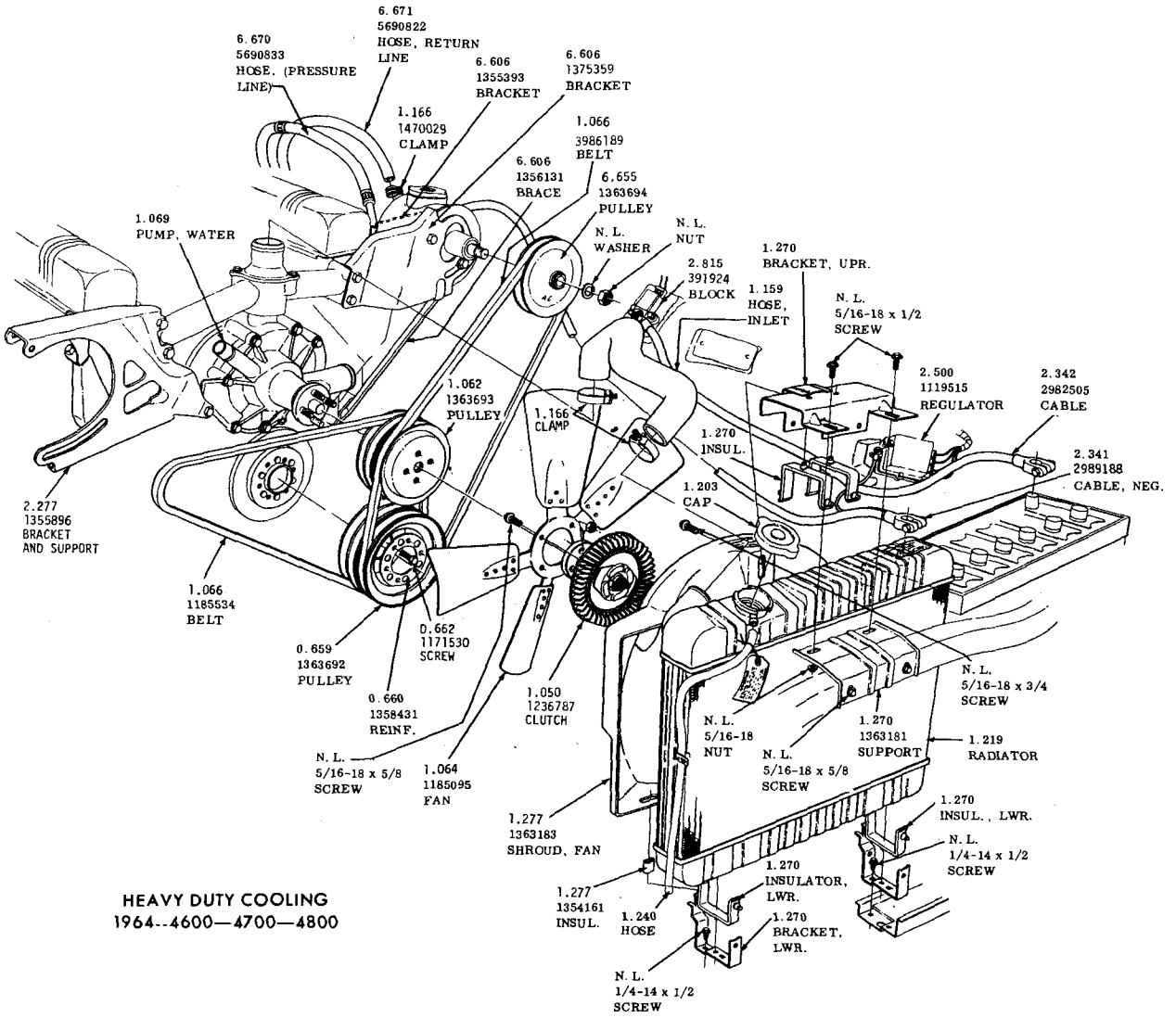

HEAVY DUTY COOLING
1964--4600—4700—4800

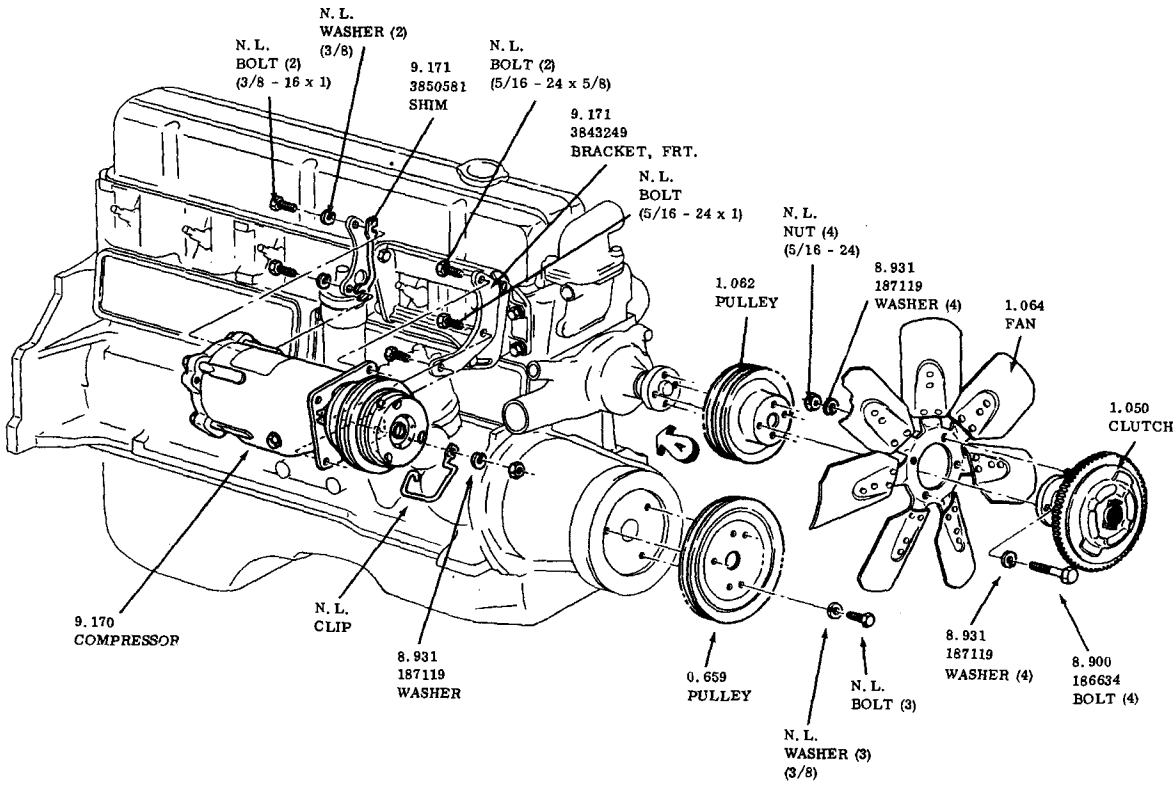

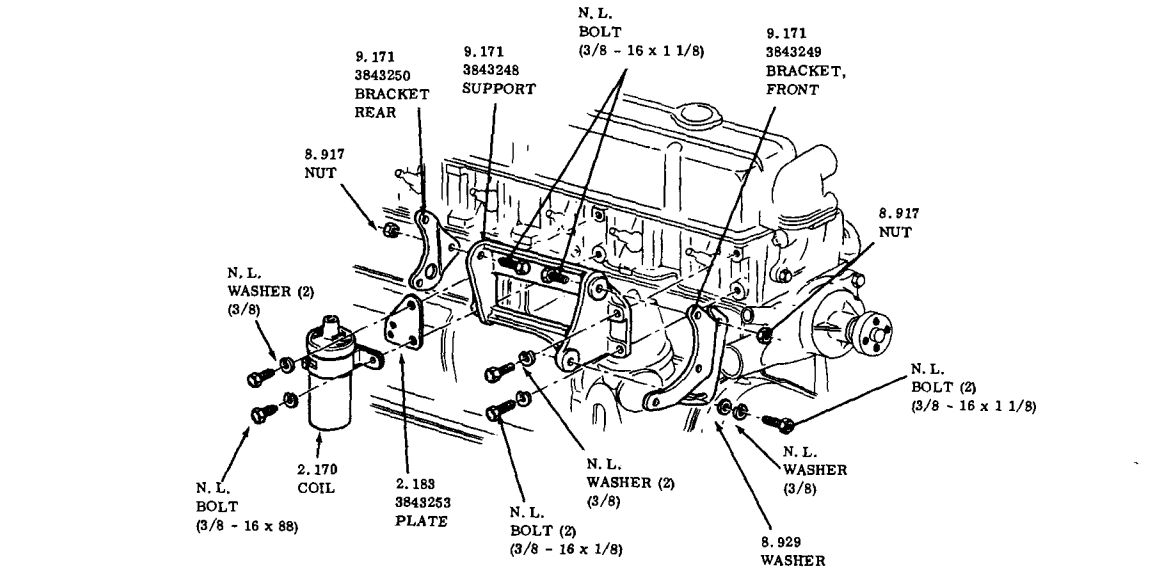

VIEW A

AIR CONDITIONING & H.P. COOLING
1970-1971 250 CU. IN. ENGINE

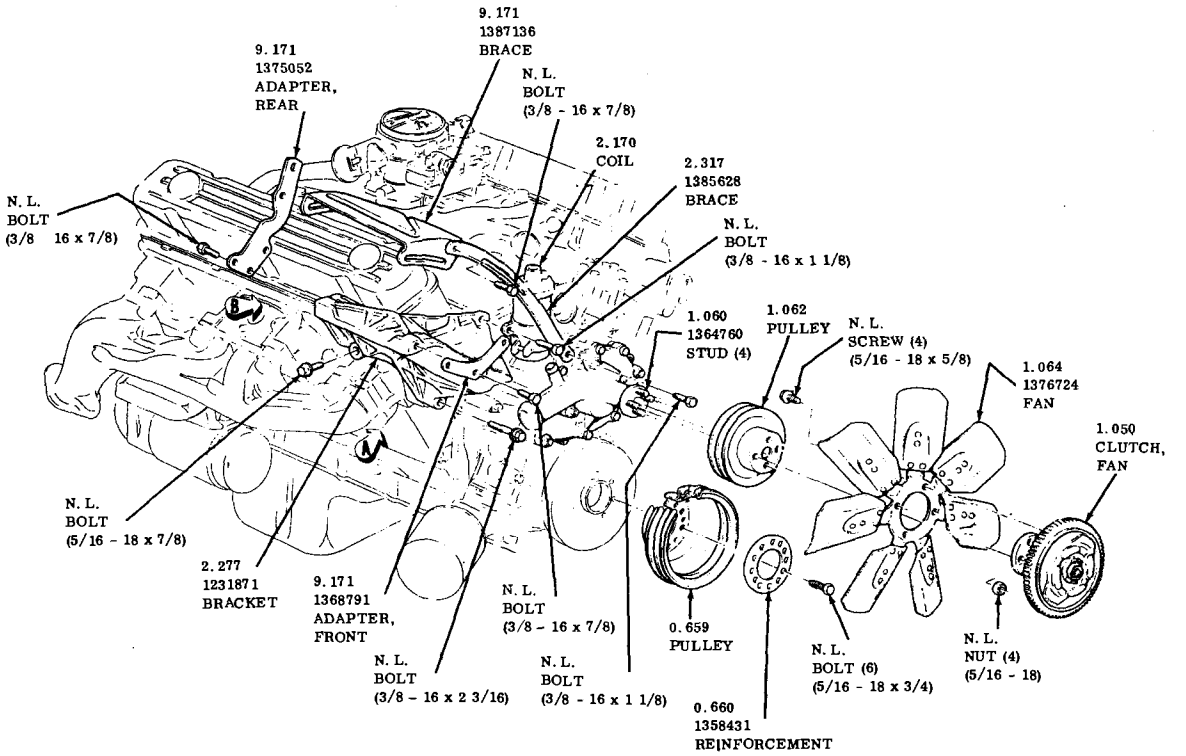

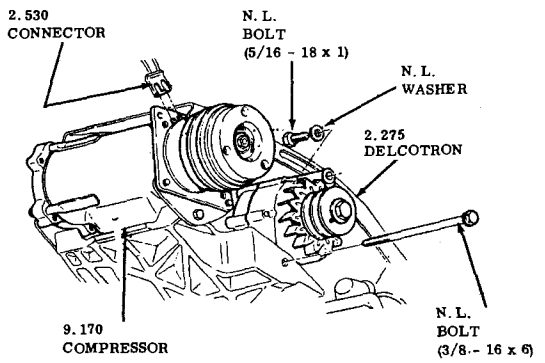

VIEW A

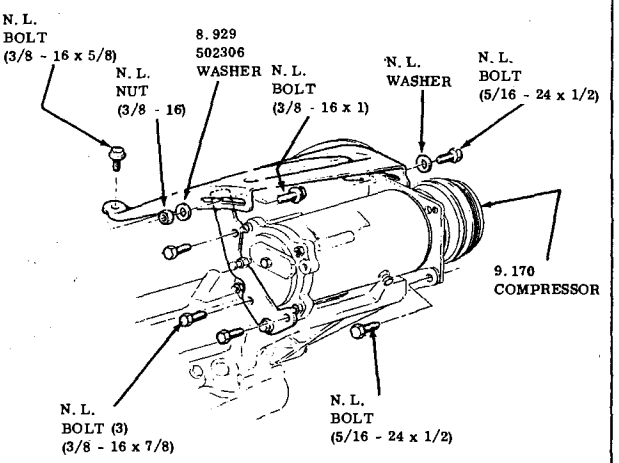

VIEW B

AIR CONDITIONING & H.D. COOLING

350 C.U. IN. ENGINE

1970-ALL

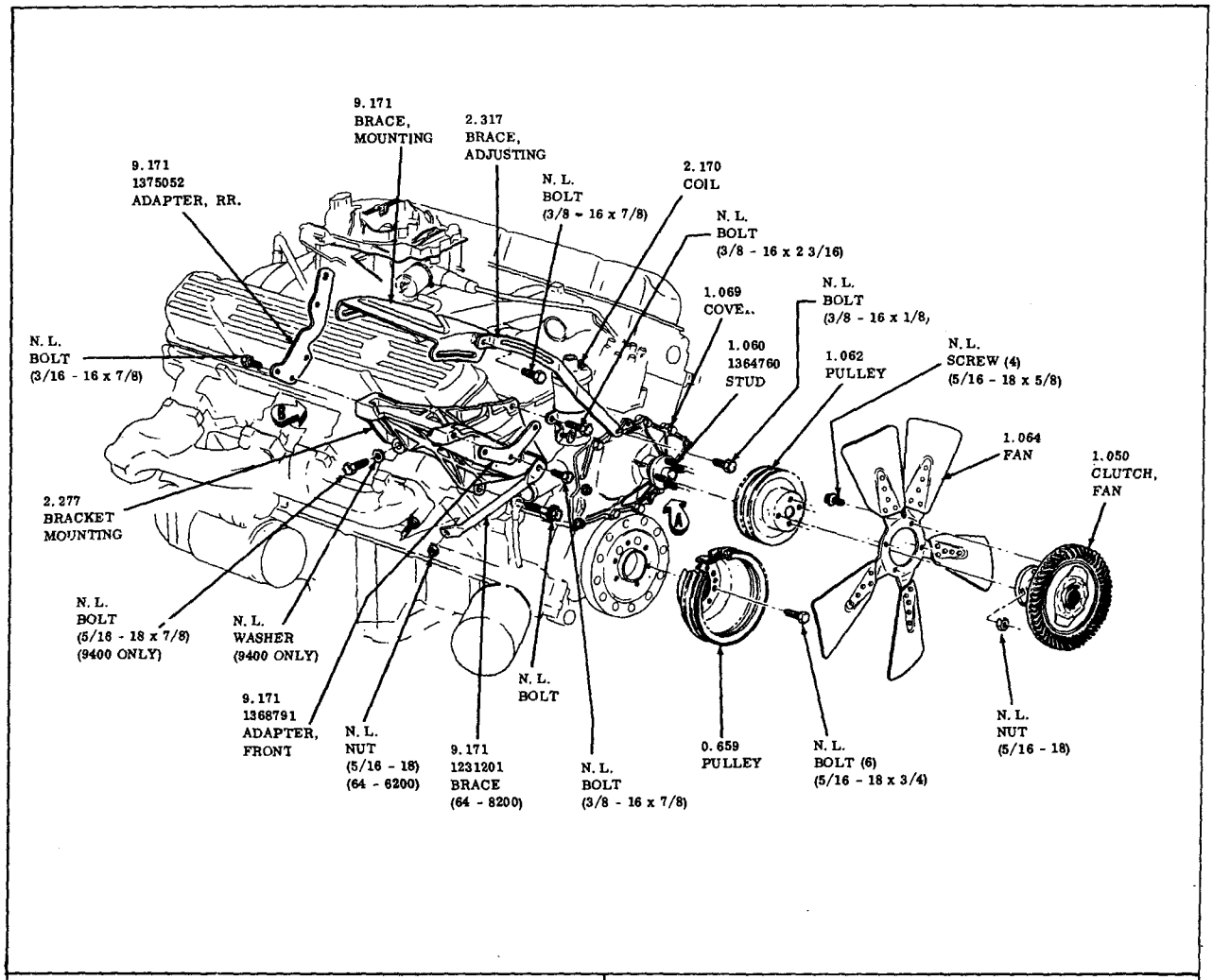

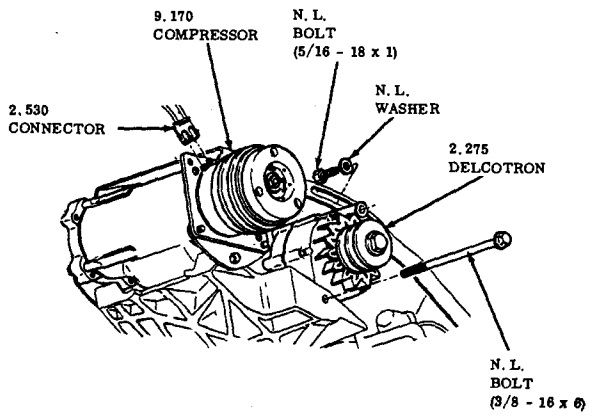

VIEW A

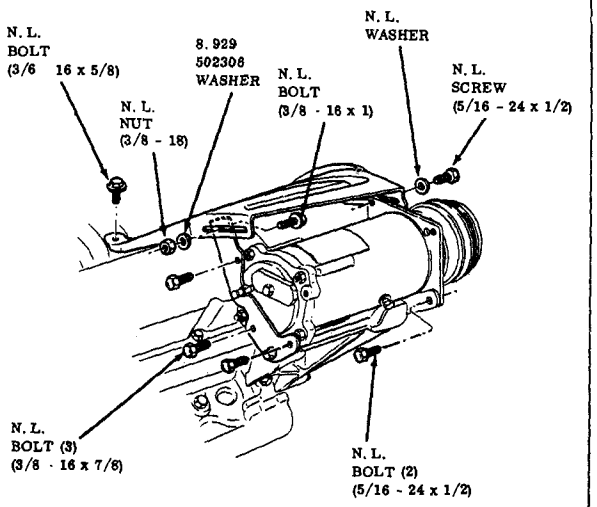

VIEW B

AIR CONDITIONING & H.D. COOLING
455 C.U. IN. ENGINE
1970-ALL

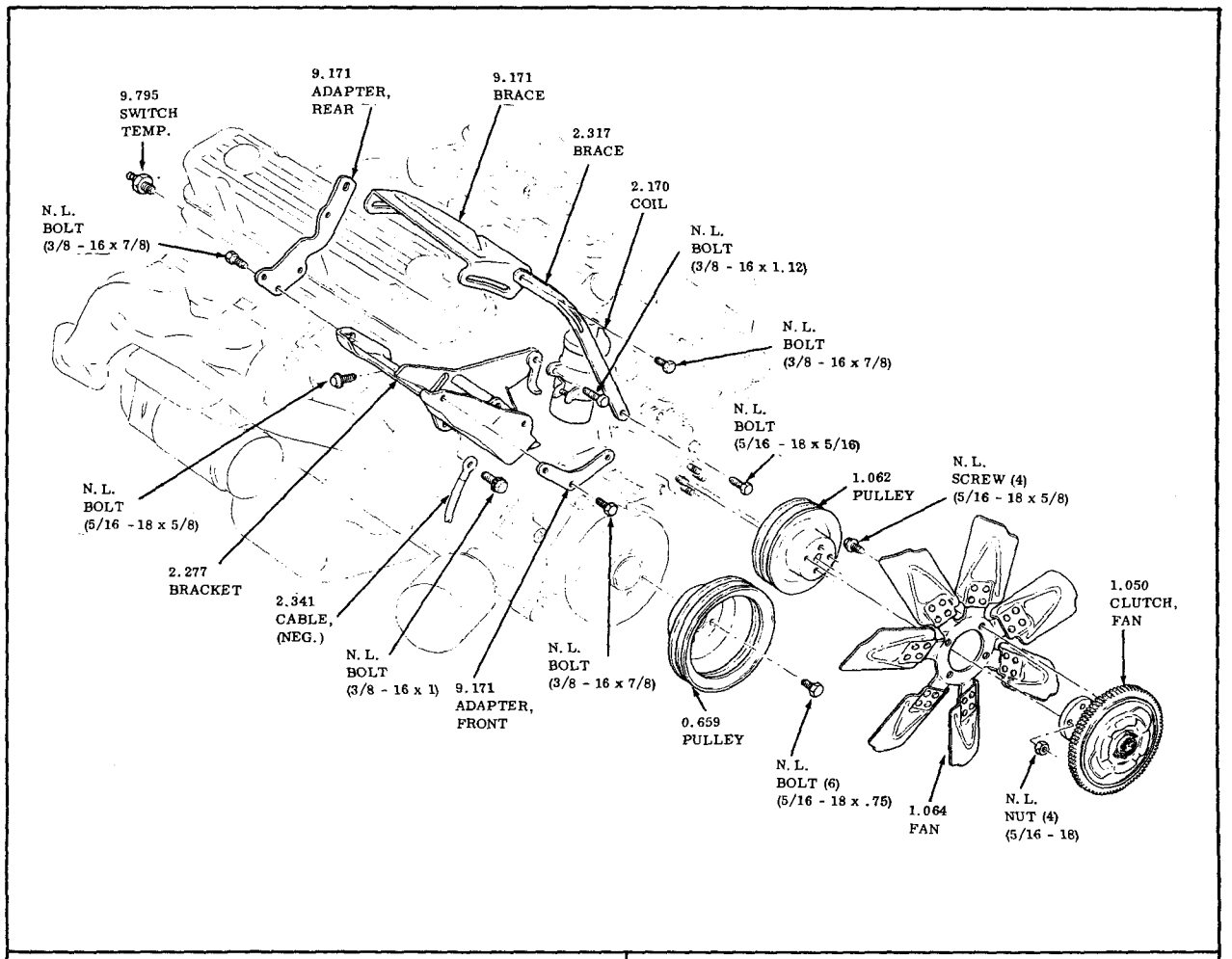

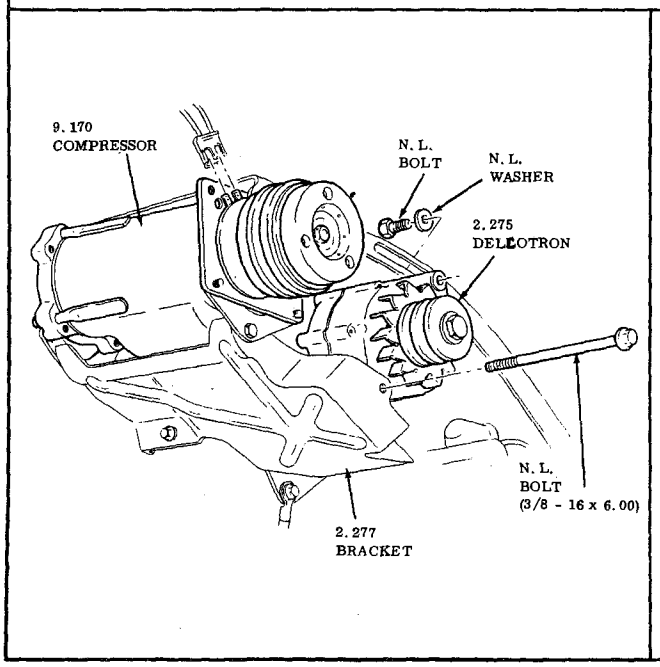

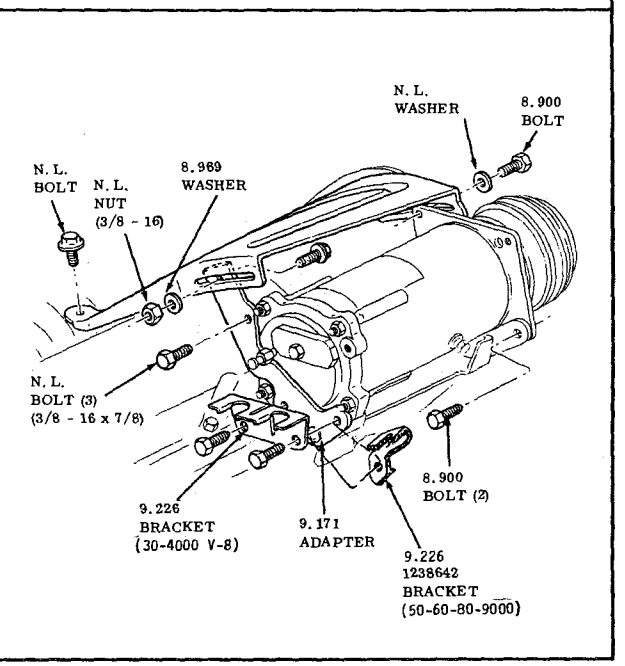

AIR CONDITIONING & H.D. COOLING
(350-455 CU. IN. ENG.)
1971-1972 -ALL

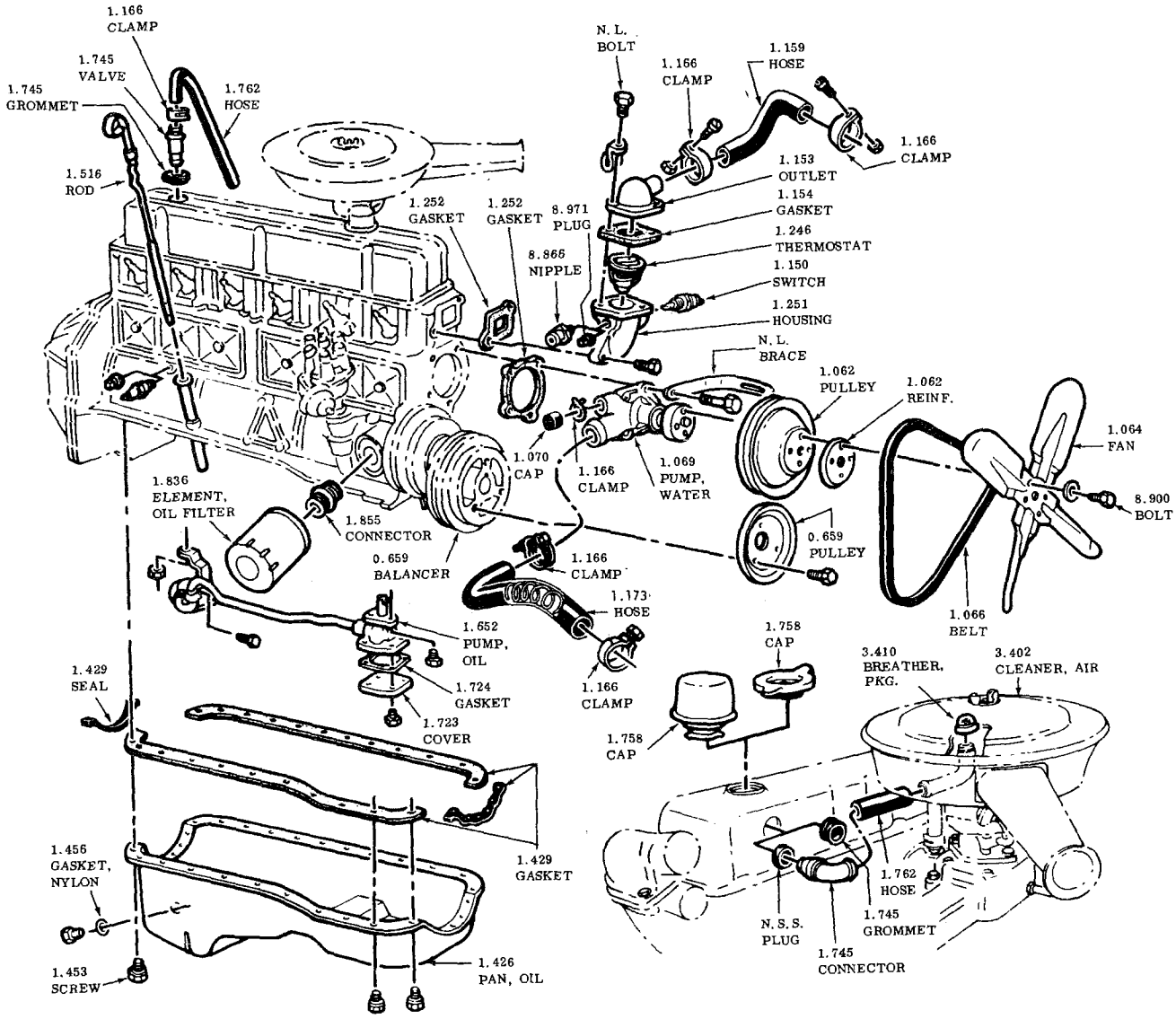

OILING AND COOLING
1968-1971 L-6-250 -CU. IN. ENGINE

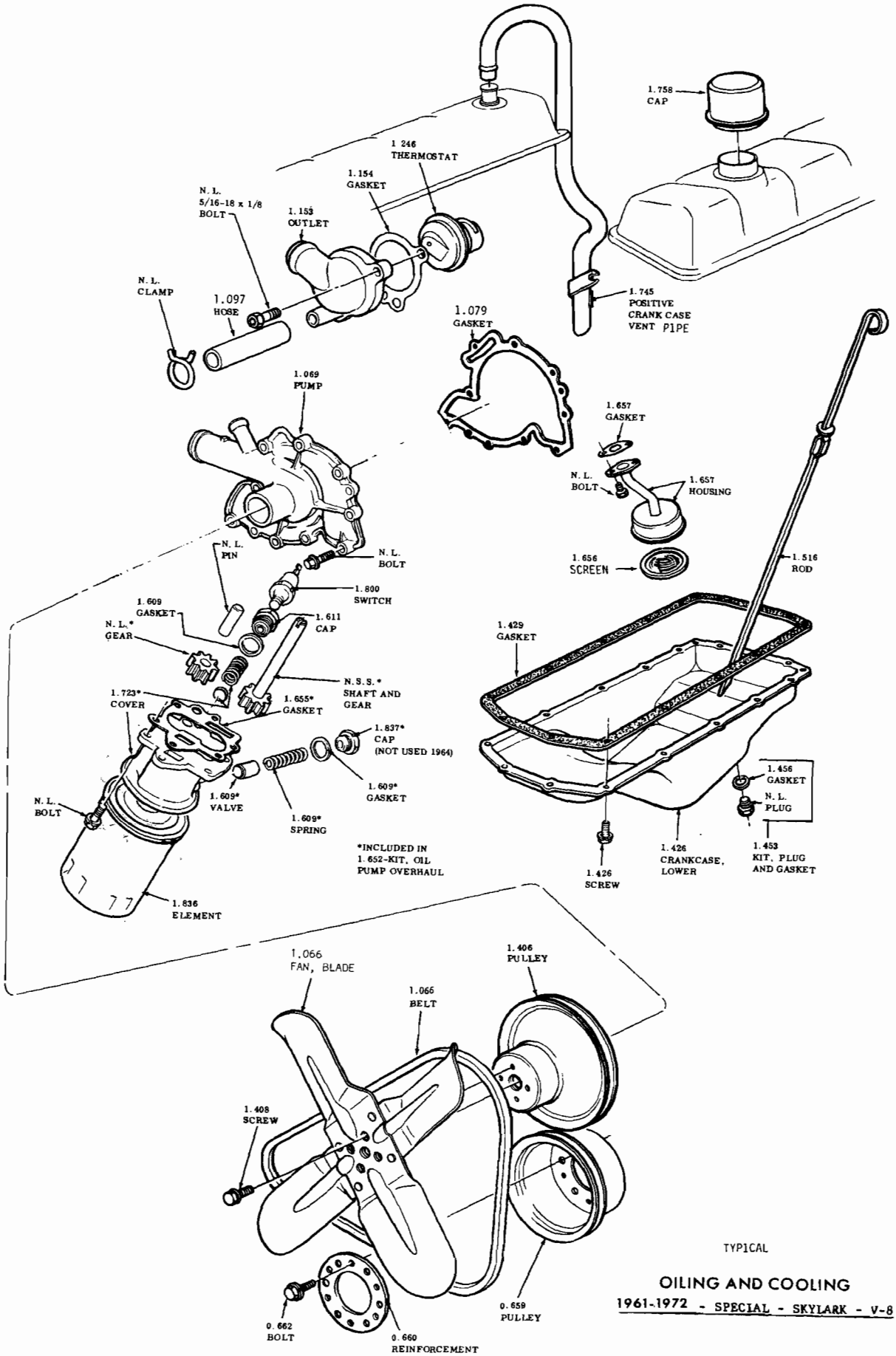

TYPICAL

OILING AND COOLING

1961-1972 - SPECIAL - SKYLARK - V-8

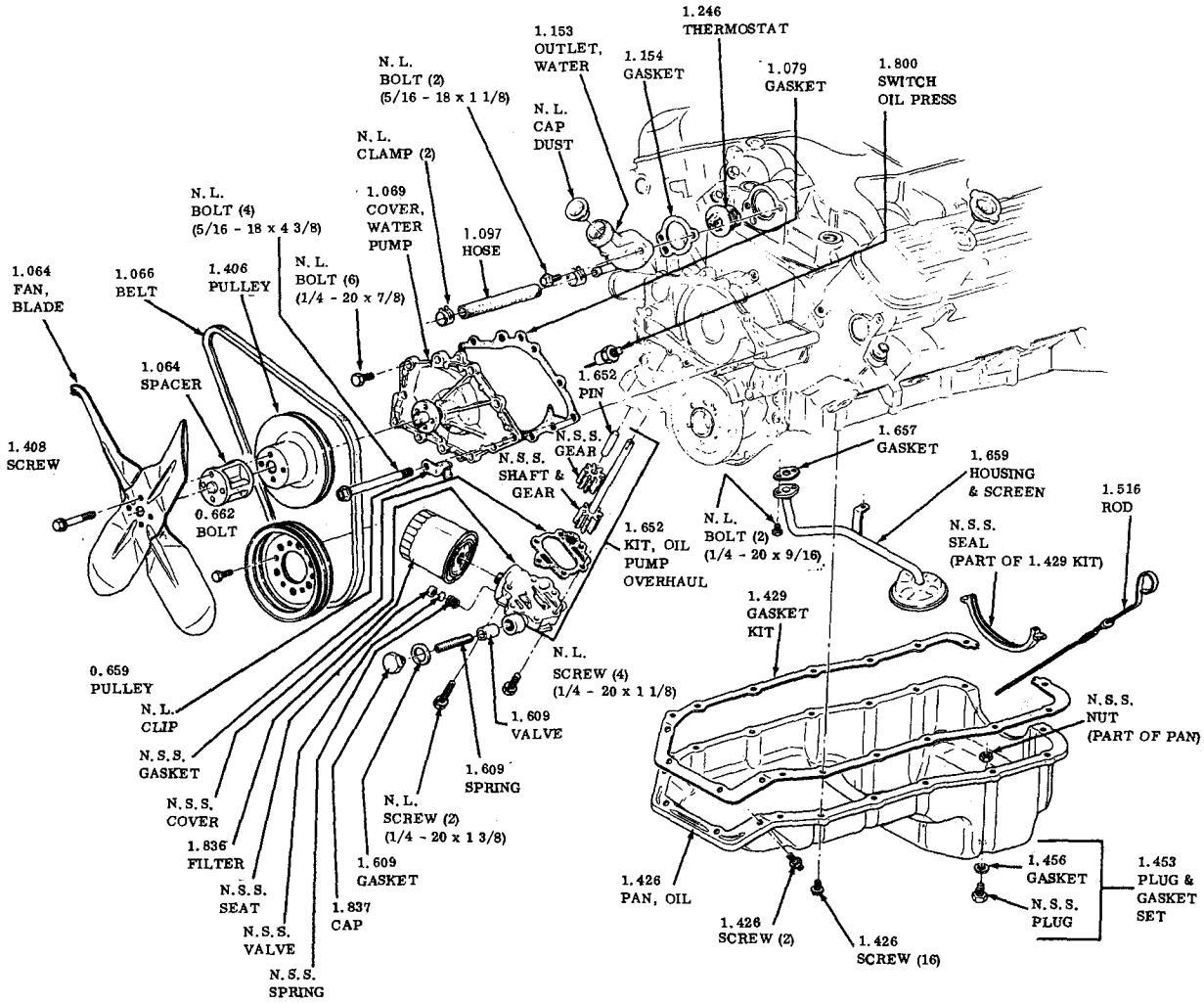

OILING AND COOLING
1970-1972 455 CU. IN. ENGINE

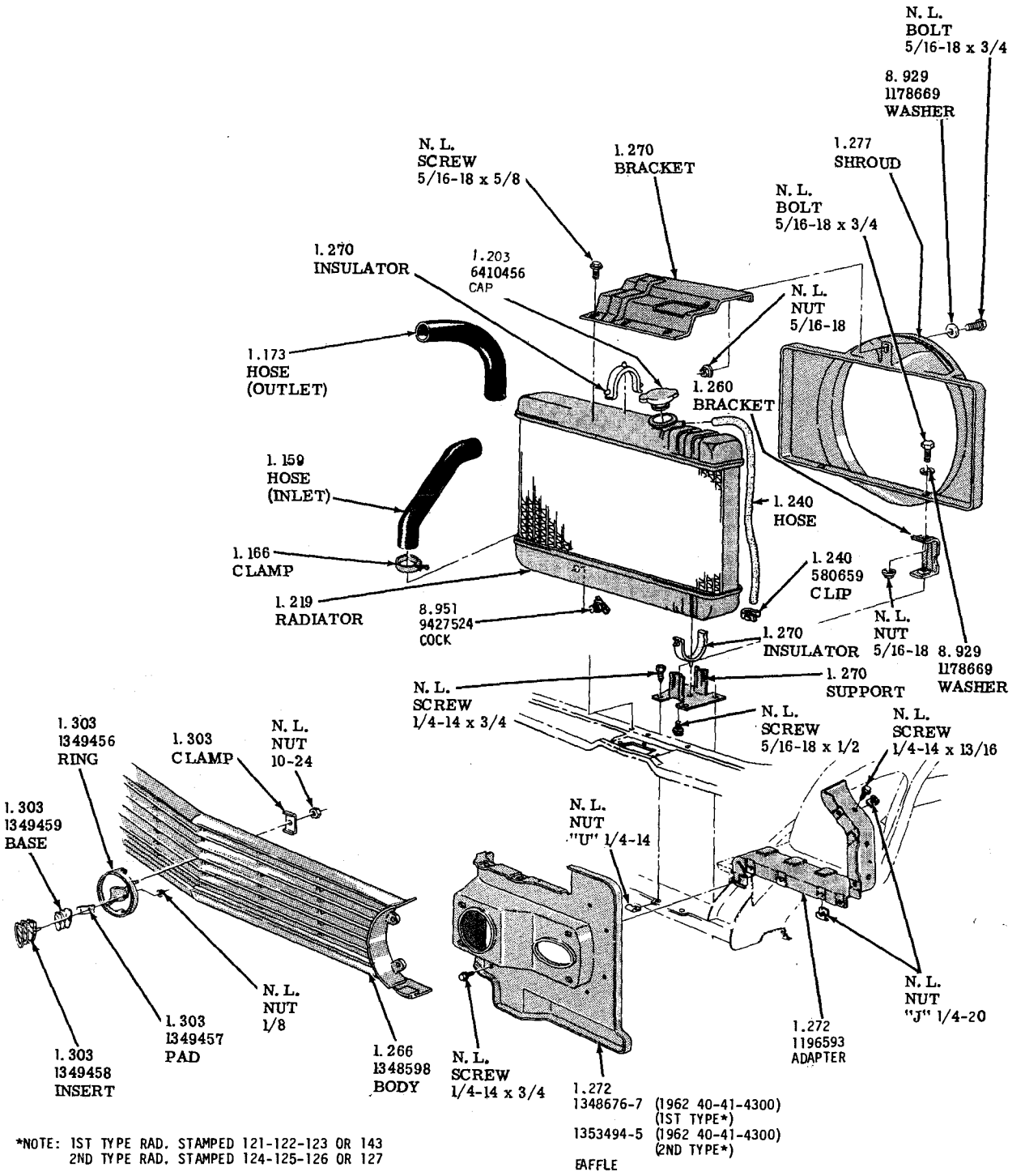

RADIATOR GRILLE AND CORE - 1961 - 4300 - 1962 40-41-4300

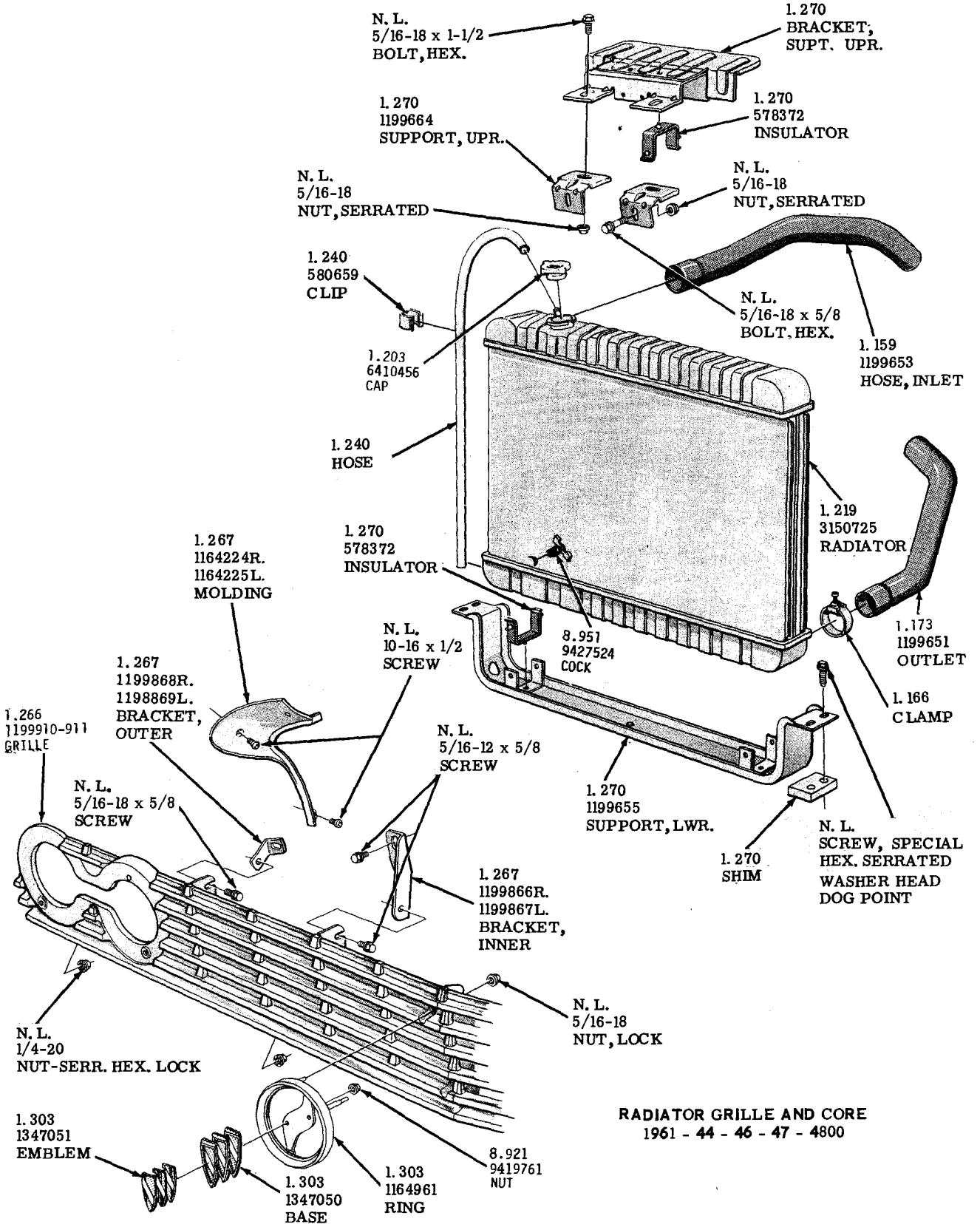

RADIATOR GRILLE AND CORE
1961 - 44 - 46 - 47 - 4800

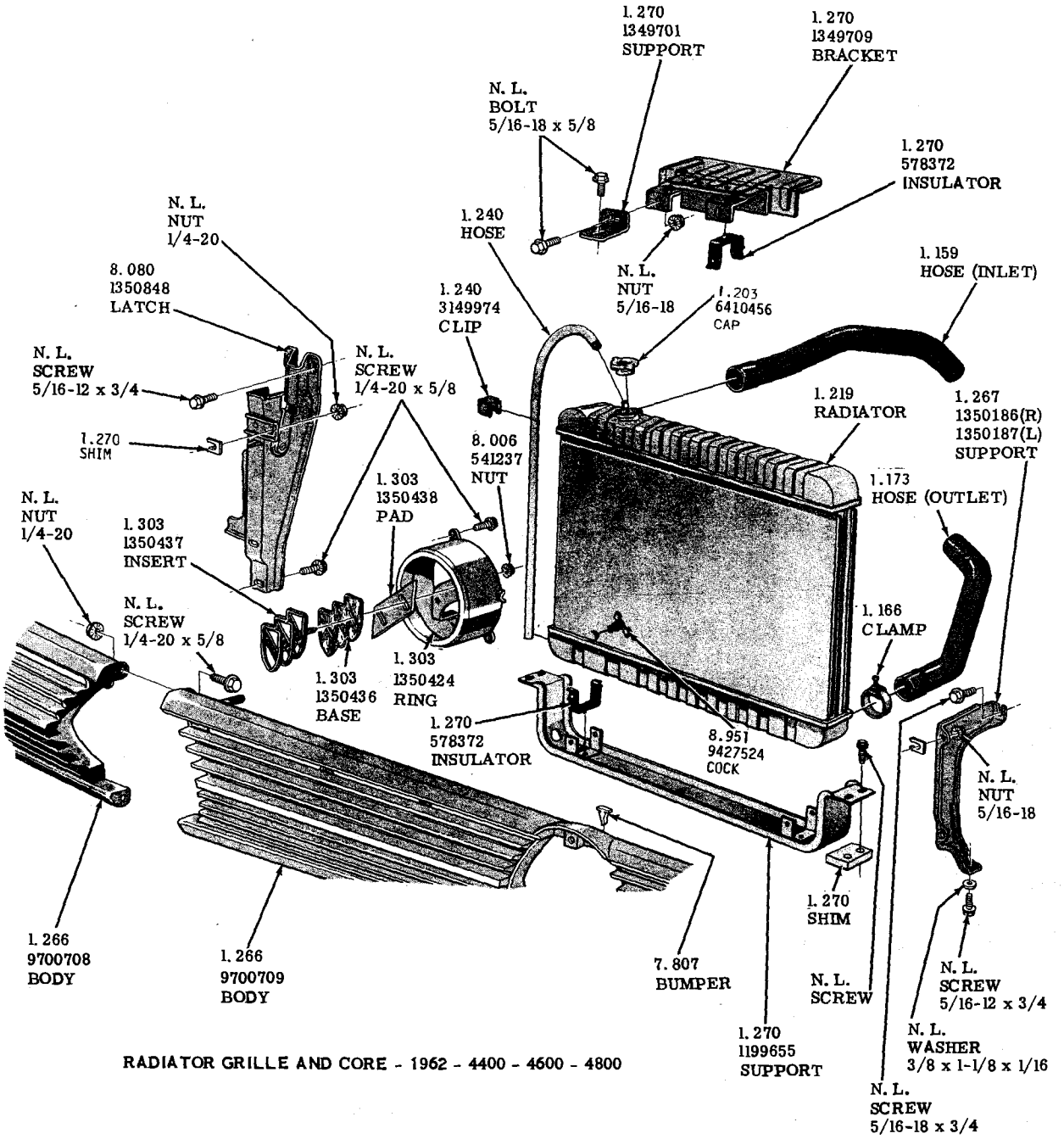

RADIATOR GRILLE AND CORE - 1962 - 4400 - 4600 - 4800

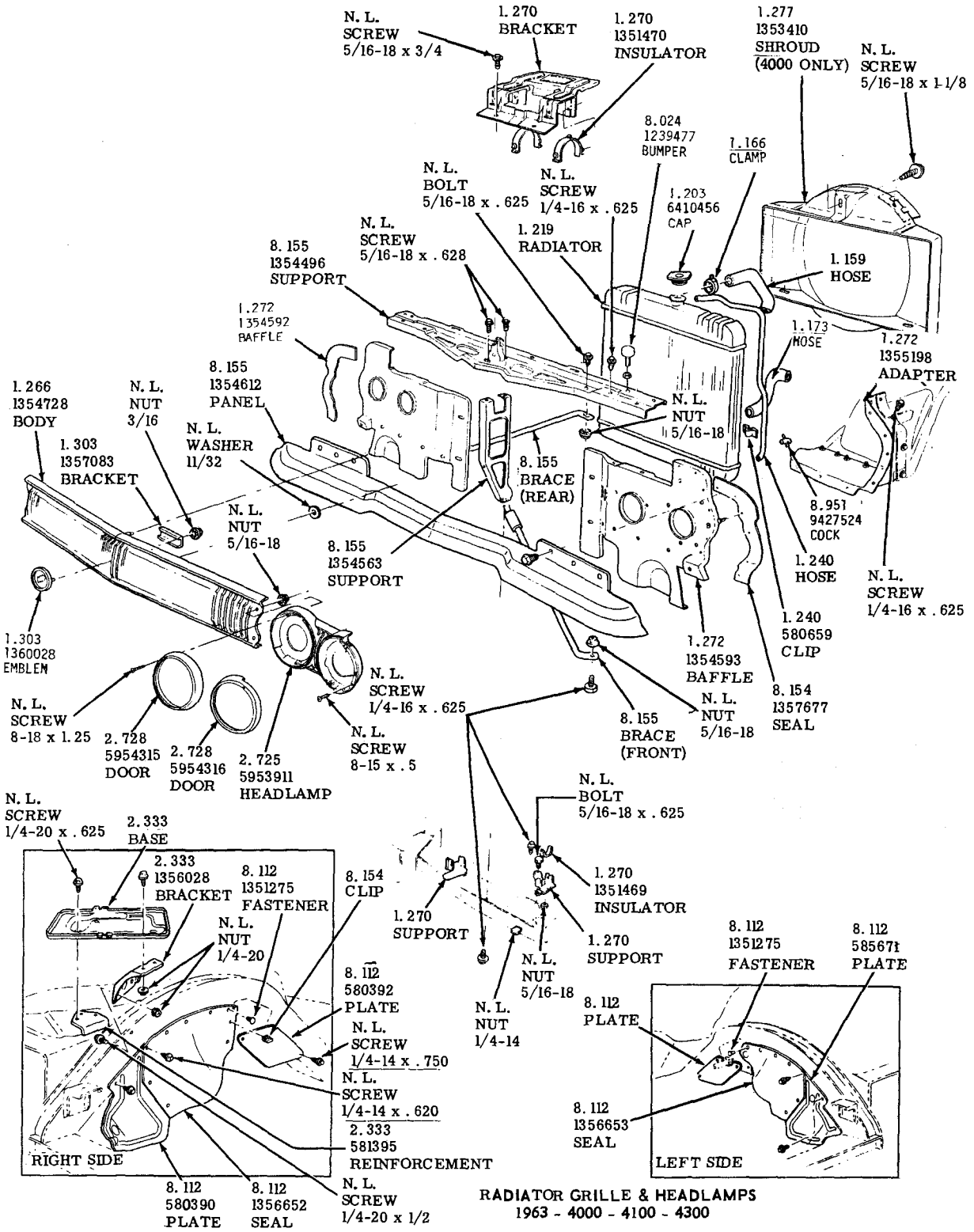

RADIATOR GRILLE & HEADLAMPS
1963 - 4000 - 4100 - 4300

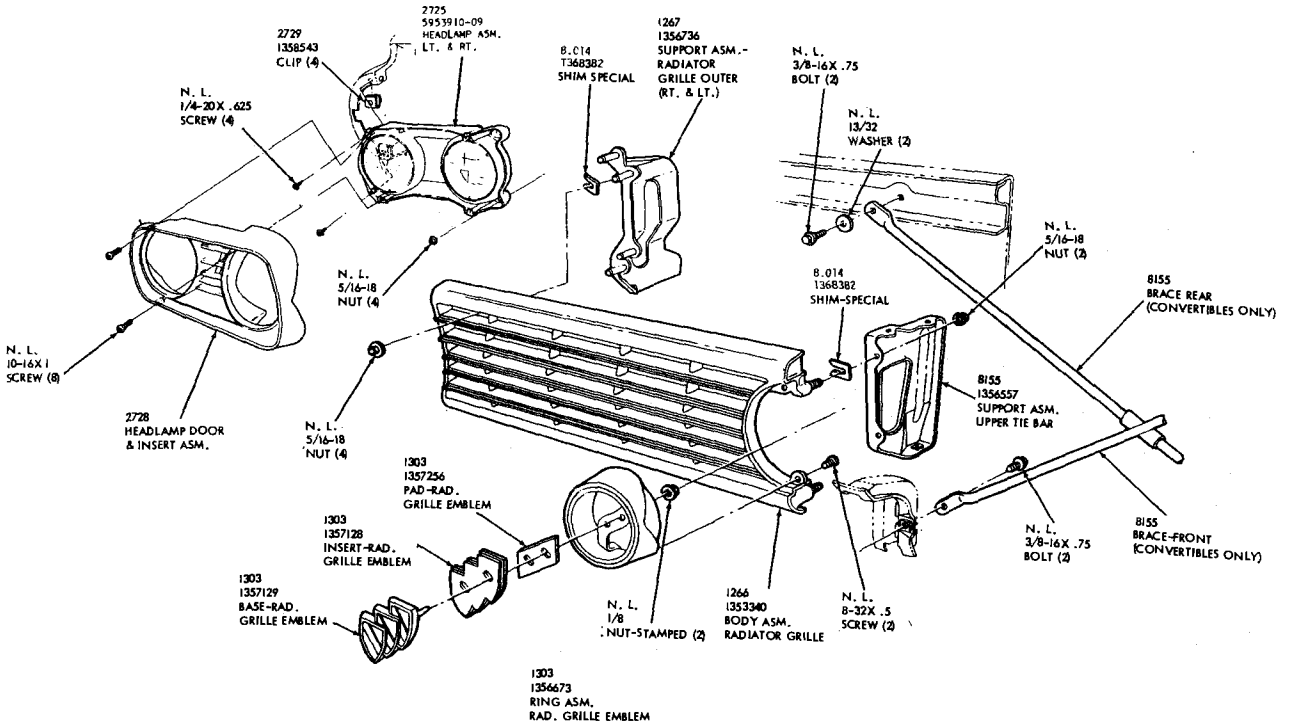

GRILLE & HEADLAMPS
1963-4400-4800 & M/4635

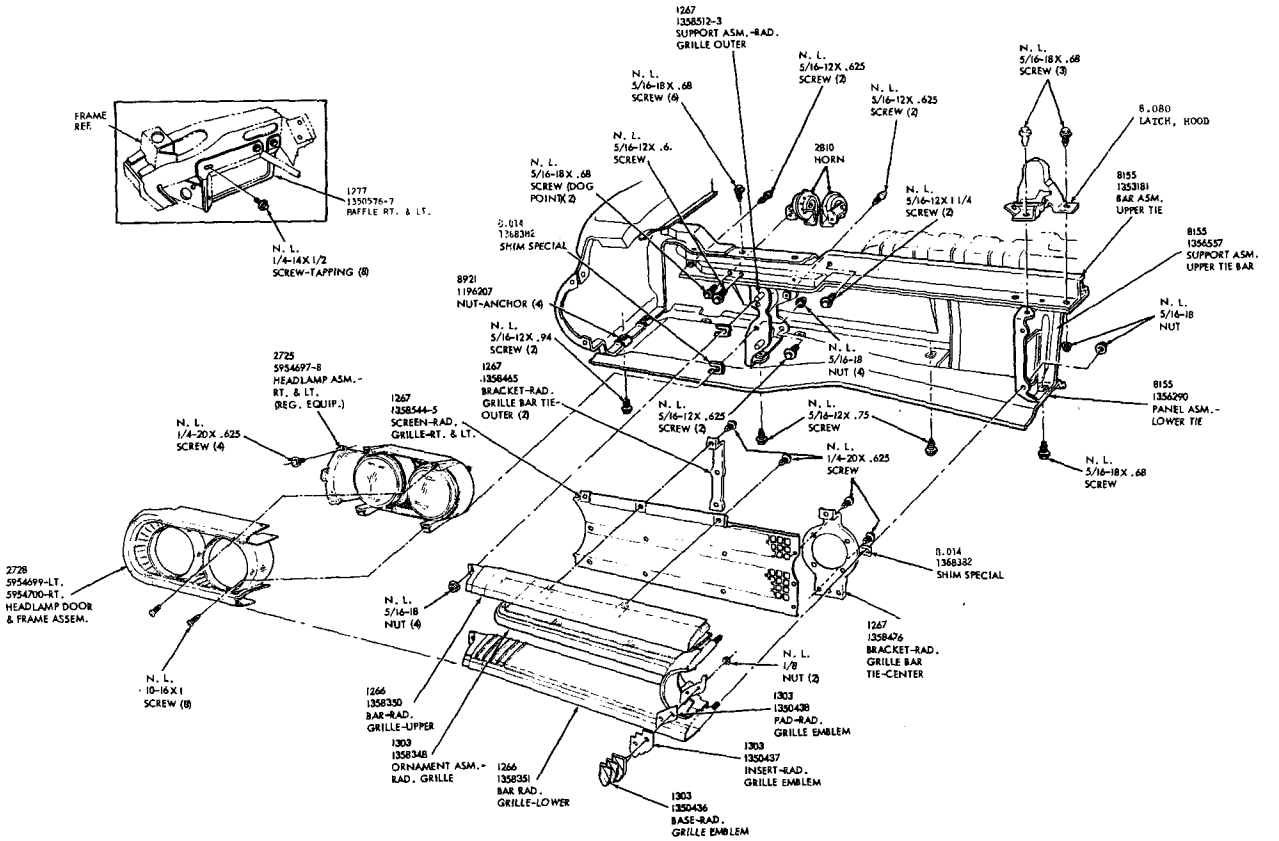

GRILLE RADIATOR & HEADLAMPS
1963—4639-4647 & 4667

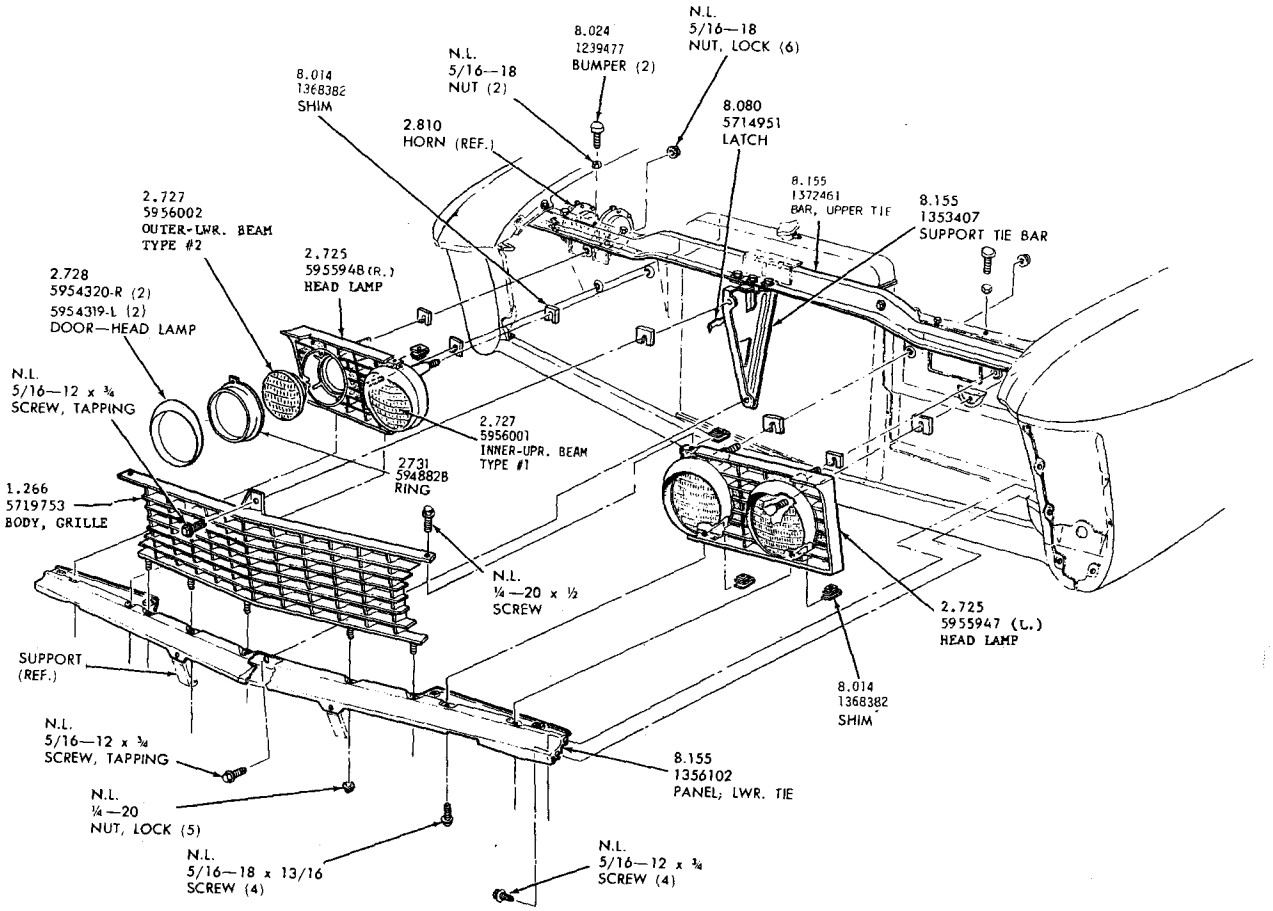

RADIATOR GRILLE AND HEAD LAMPS
1963—1964-4700

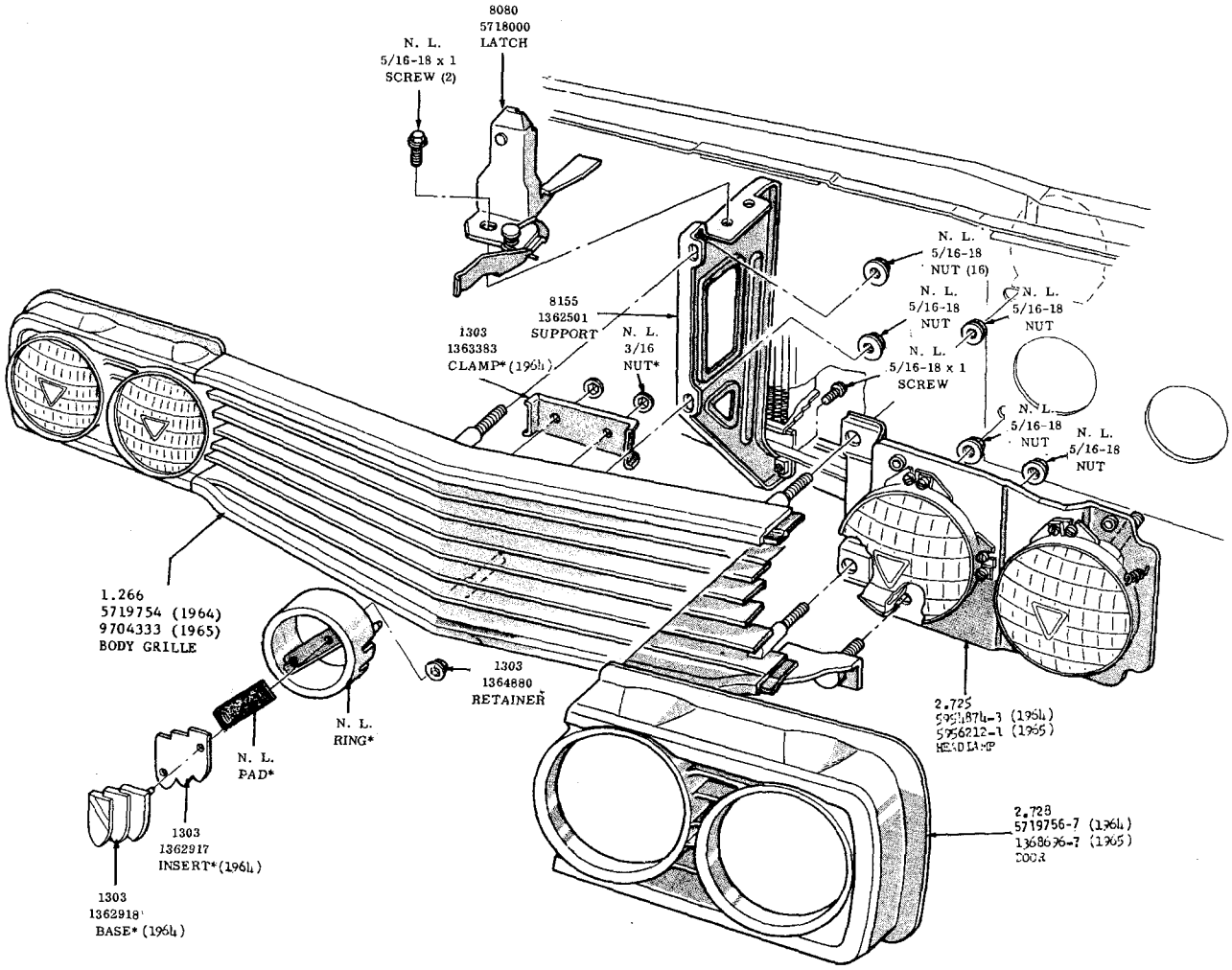

*INCLUDED IN
1303-1365461 (1964)

RADIATOR GRILLE
1964-1965 - SPECIAL - SKYLARK

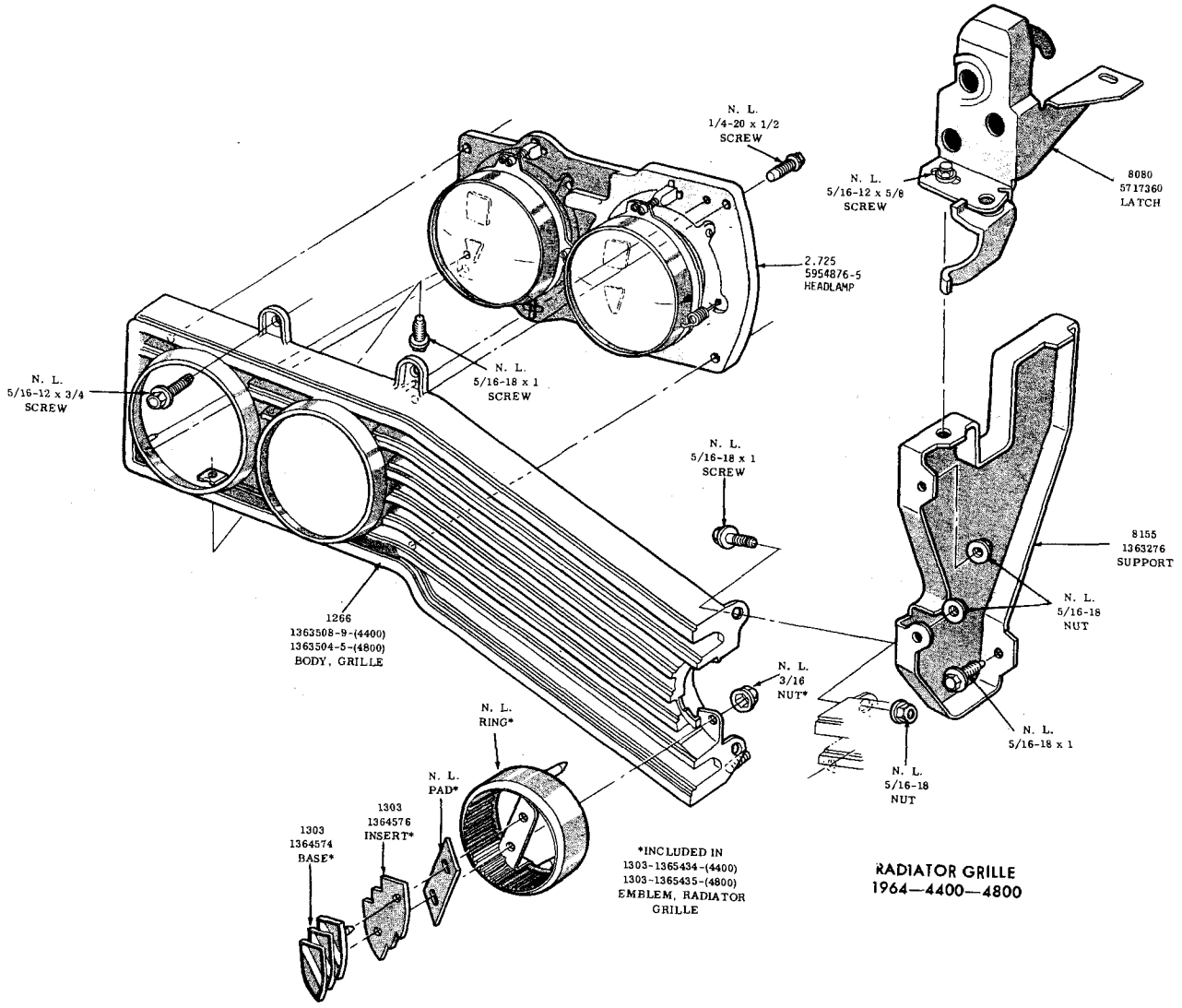

RADIATOR GRILLE
1964—4400—4800

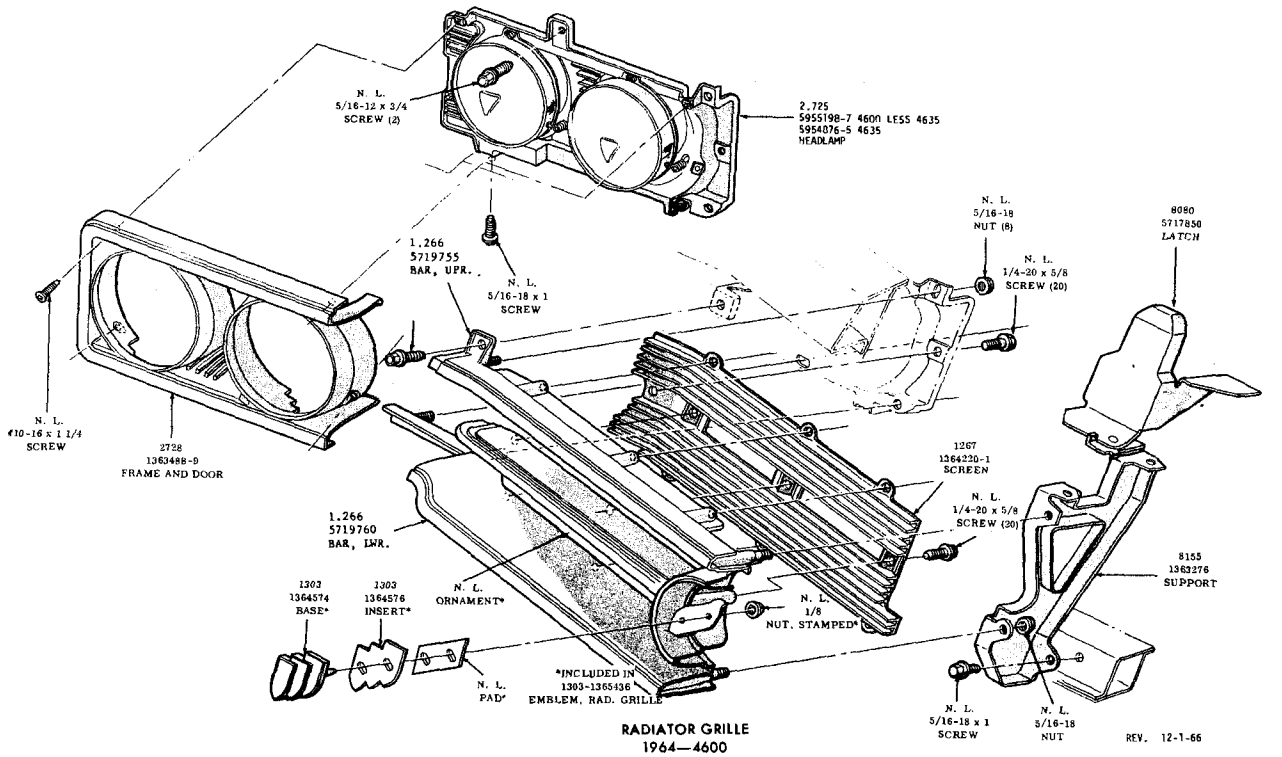

RADIATOR GRILLE
1964—4600

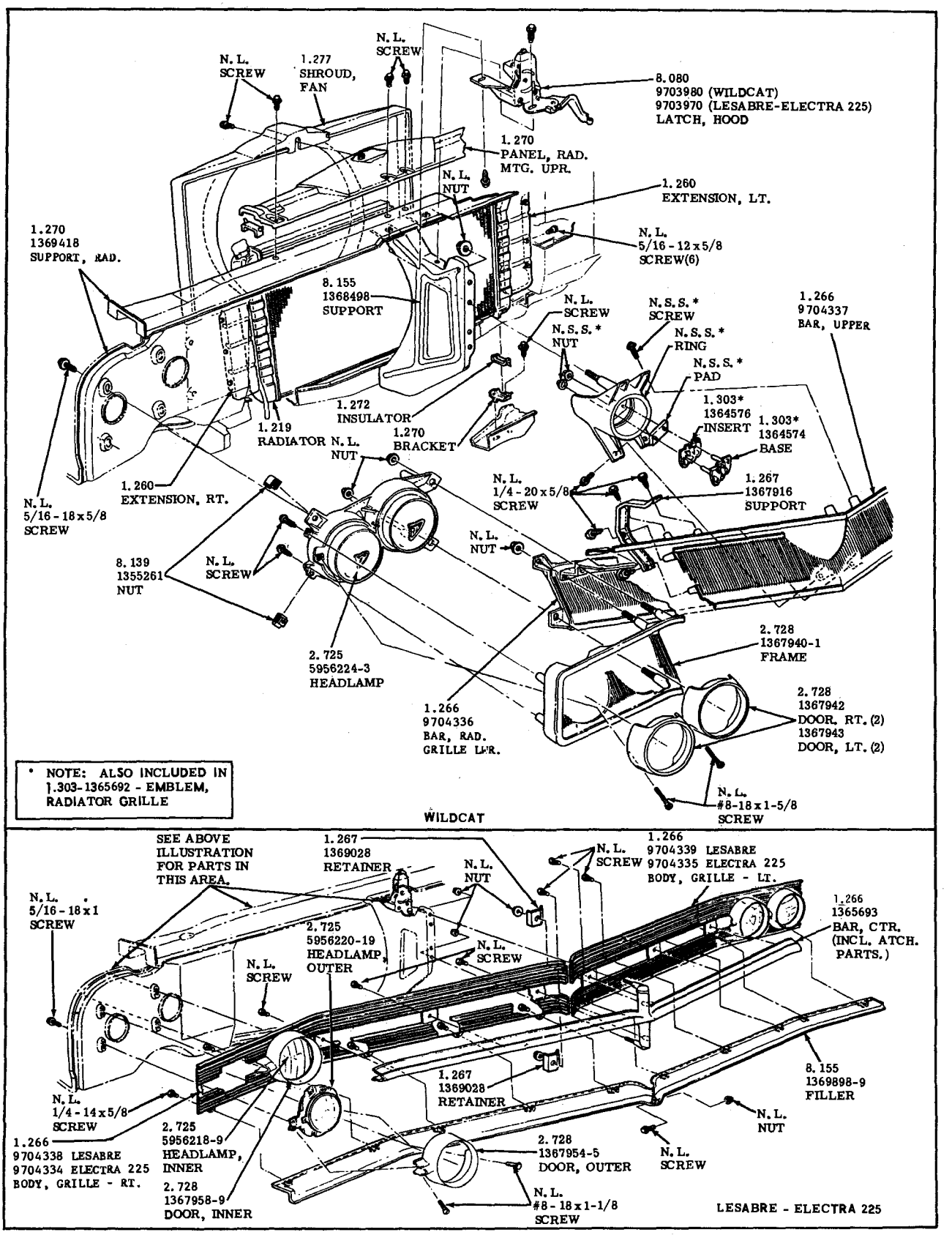

RADIATOR GRILLE AND HEADLAMPS
1965

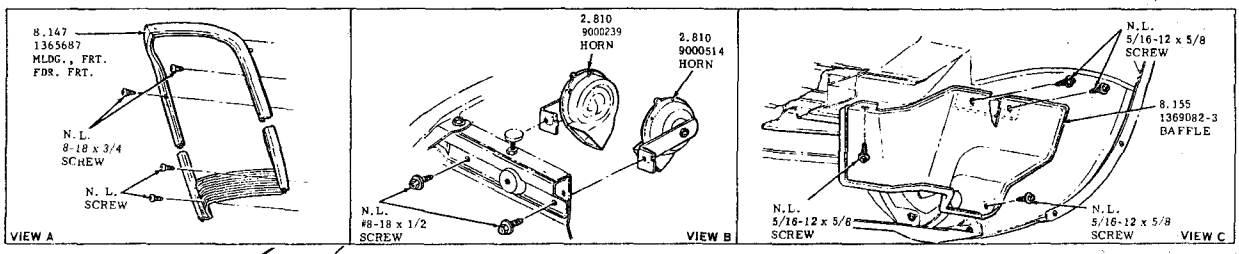

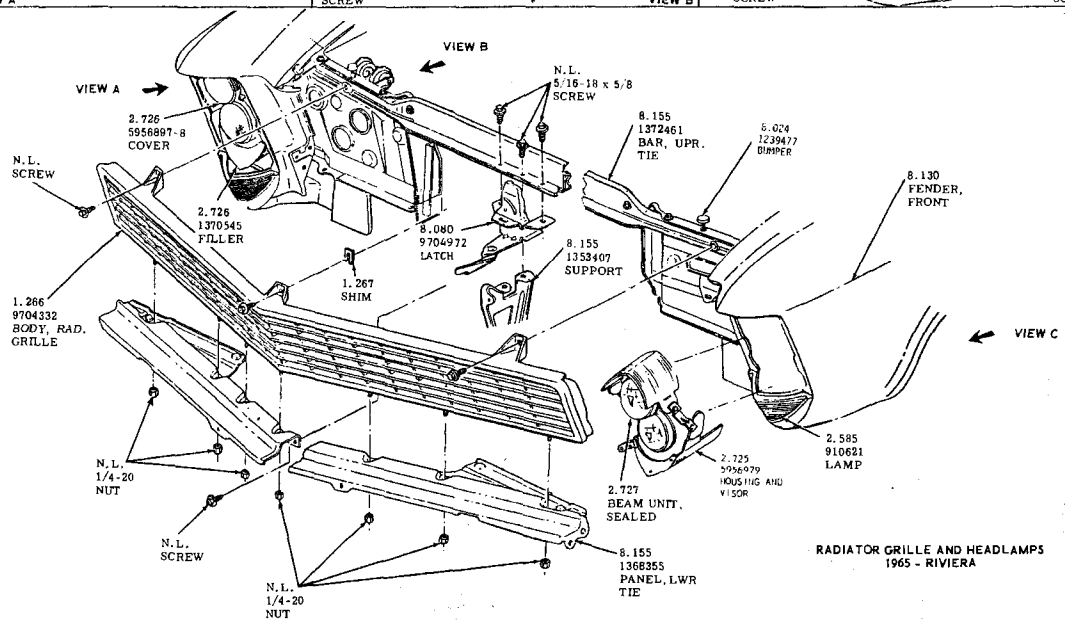

RADIATOR GRILLE AND HEADLAMPS
1965 - RIVIERA

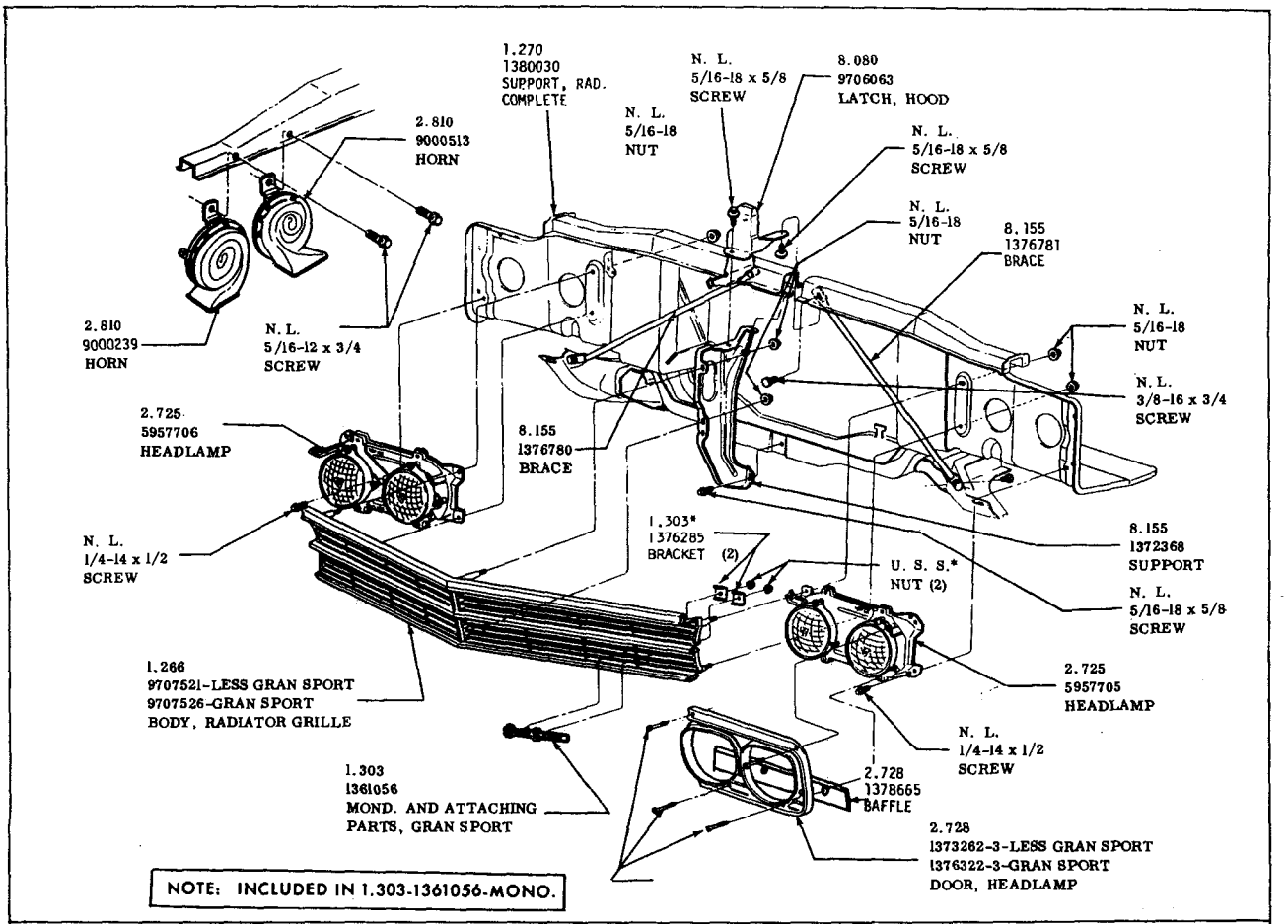

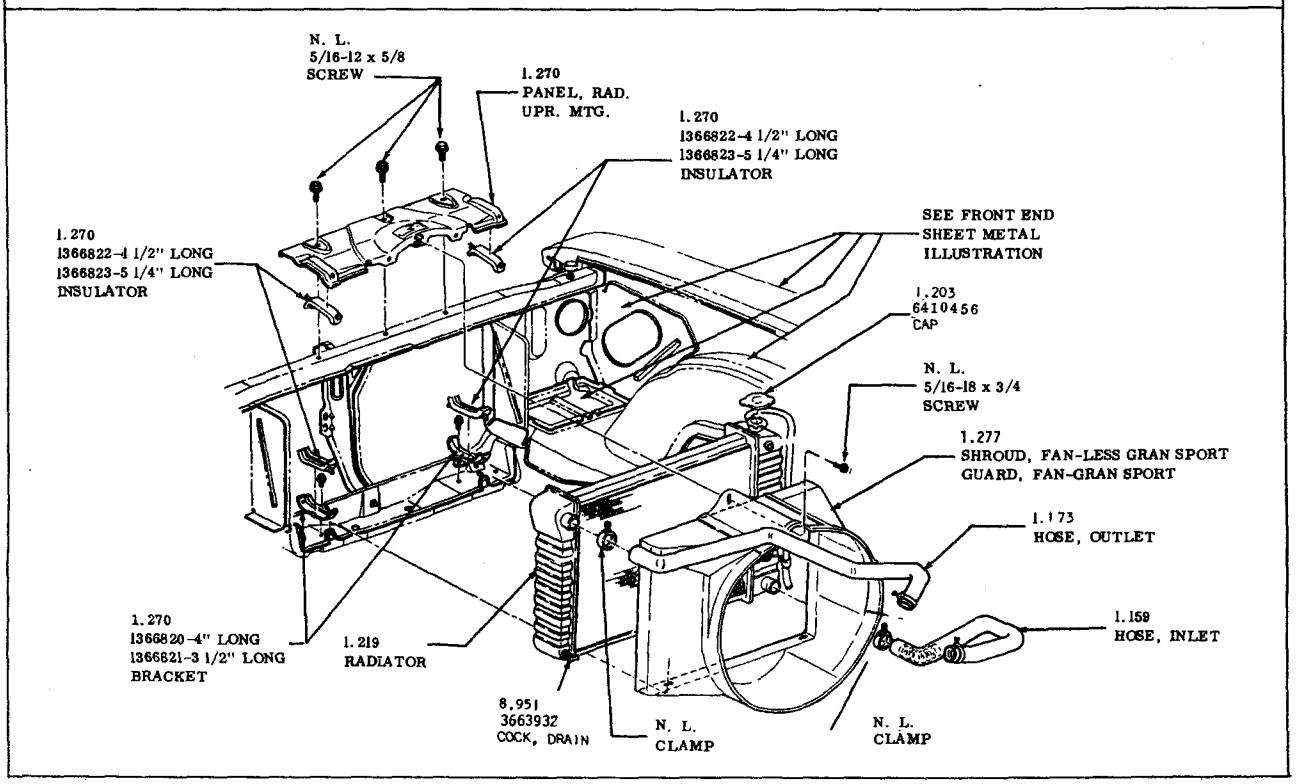

RADIATOR AND GRILLE
1966-SPECIAL-SKYLARK-GRAN SPORT

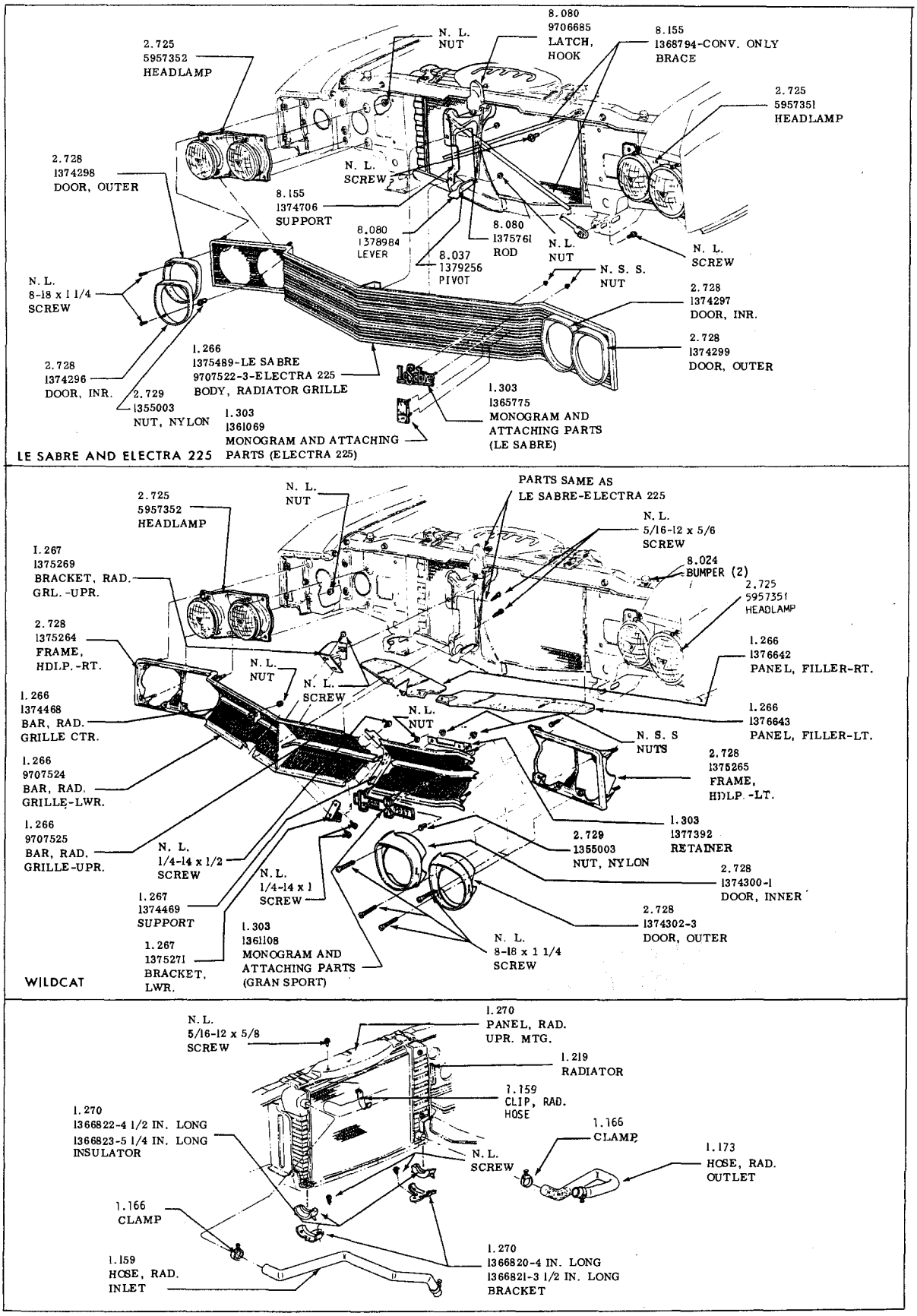

RADIATOR GRILLE AND HEADLAMPS
1966-LE SABRE-WILDCAT-ELECTRA 225

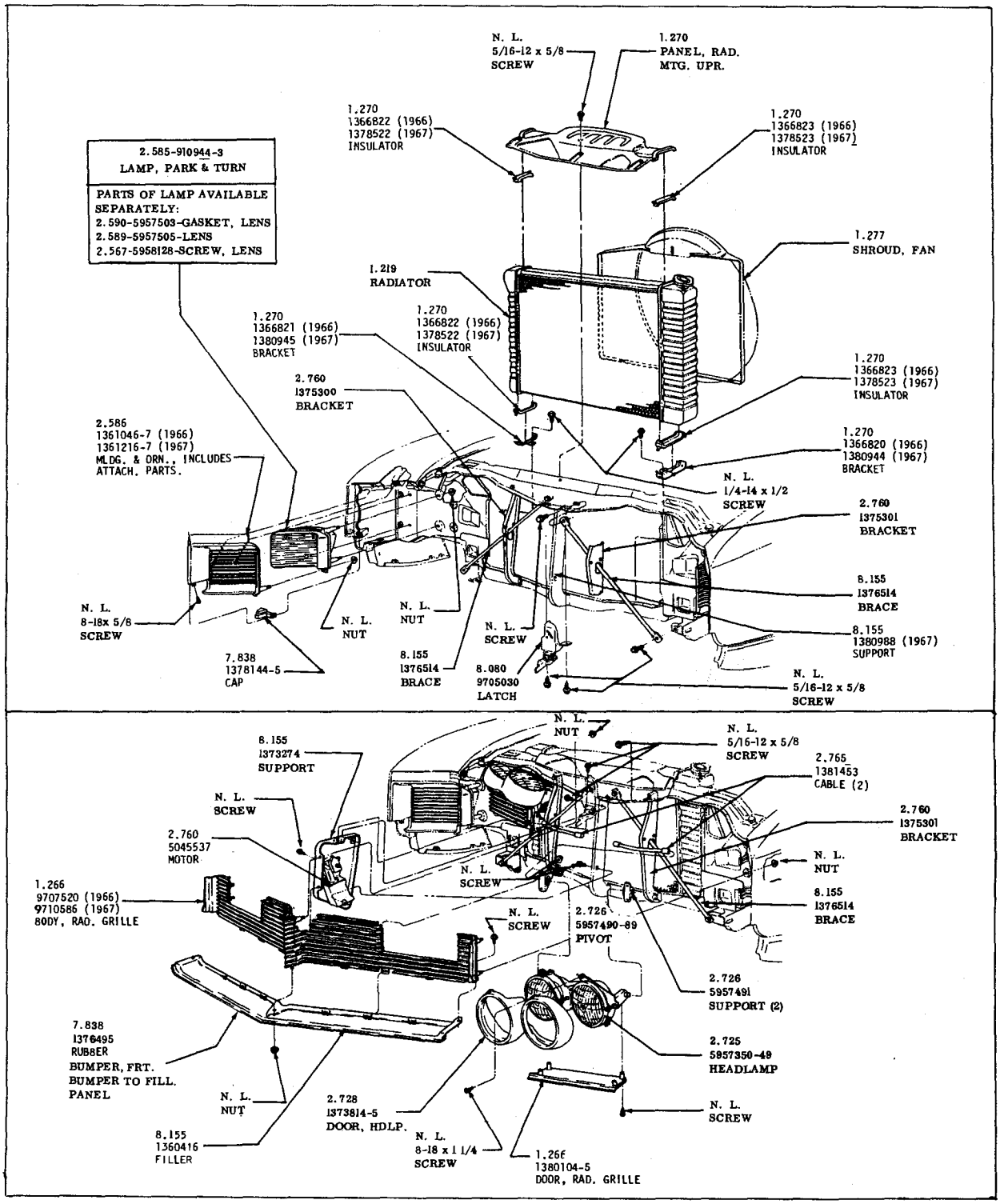

RADIATOR AND GRILLE AND HEADLAMPS
1966-1967 RIVIERA

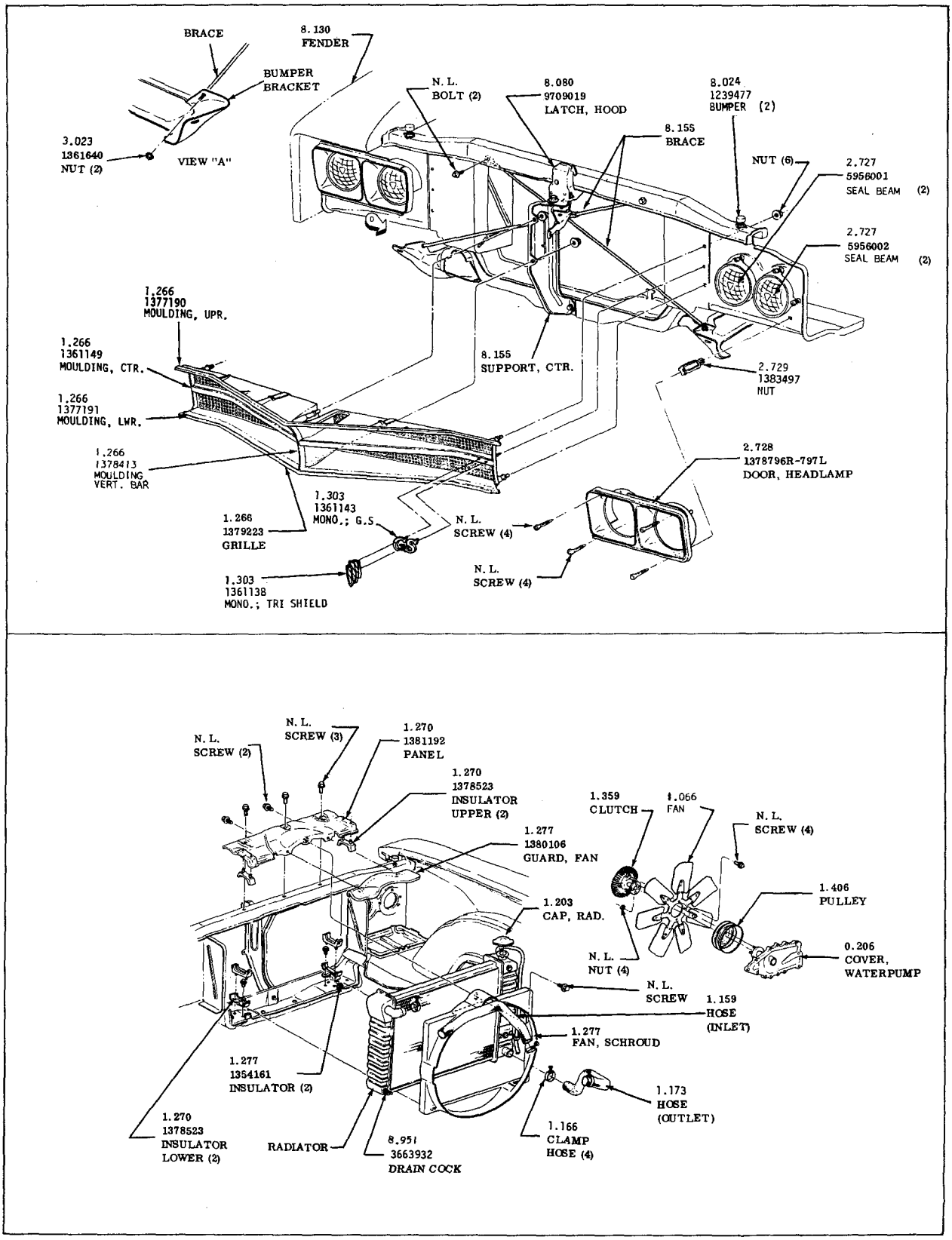

RADIATOR AND GRILLE

1967—3000—4600

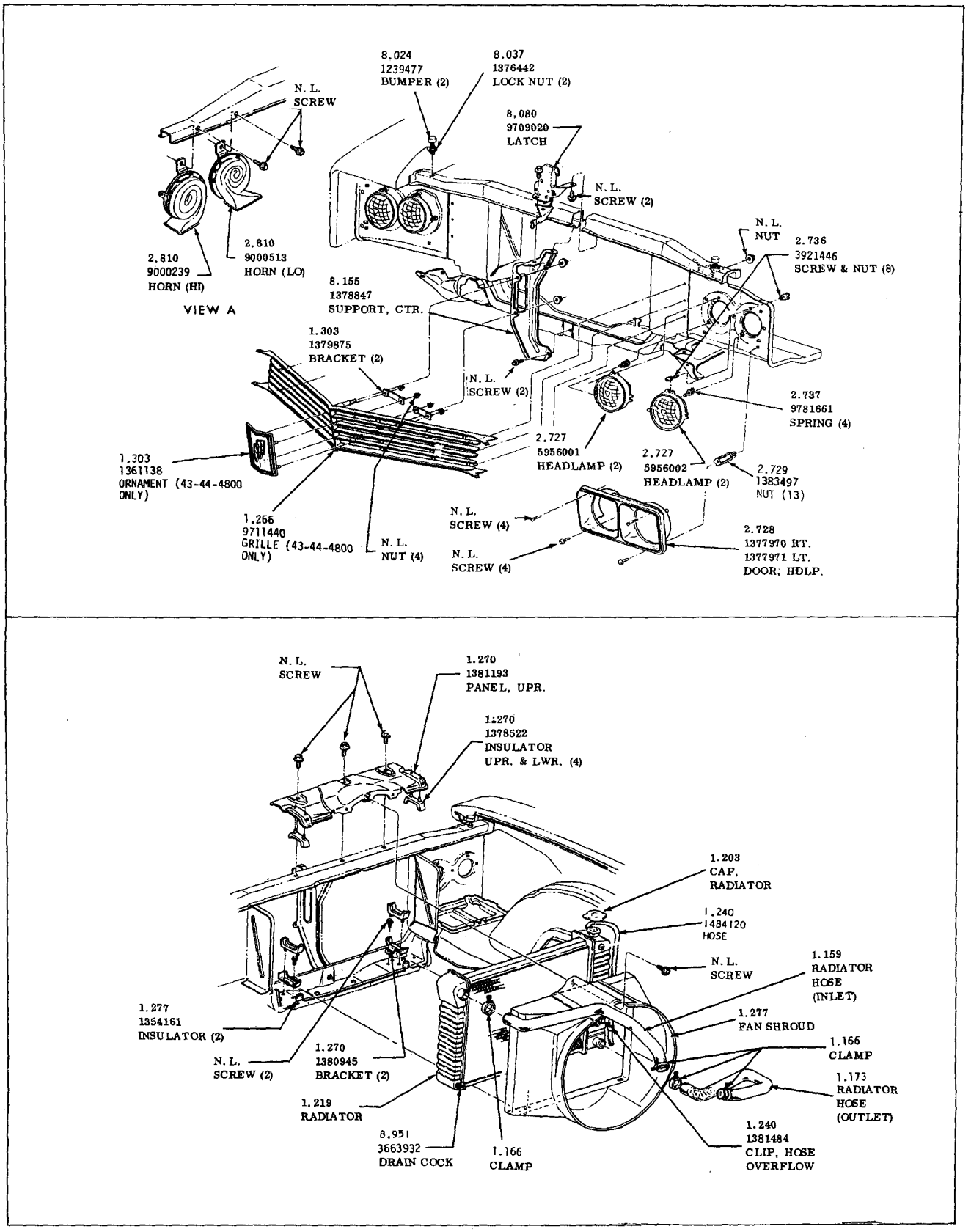

RADIATOR AND GRILLE
1967 —4000 EXC. 4600

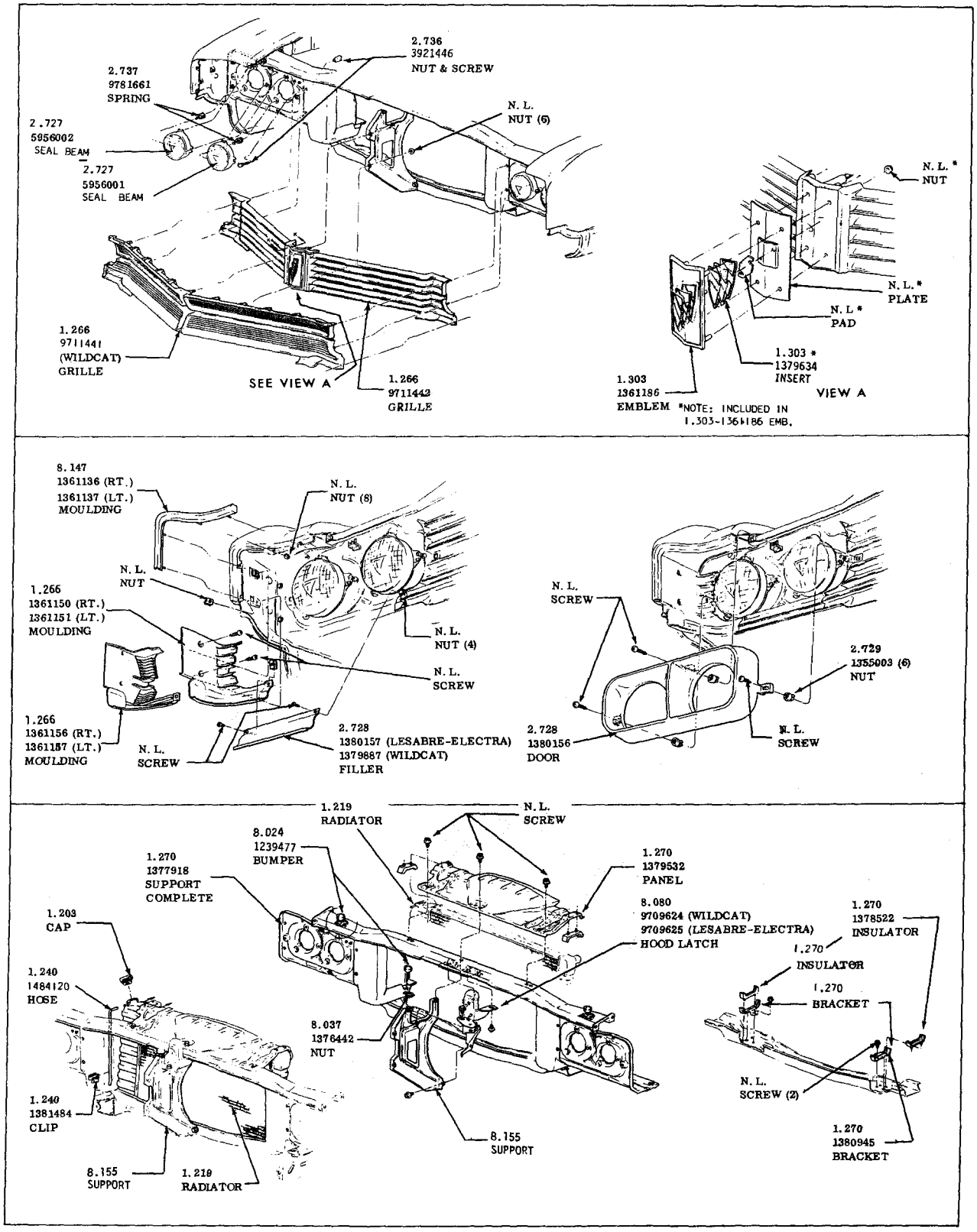

RADIATOR AND GRILLE

1967—LE SABRE—WILDCAT—ELECTRA 225

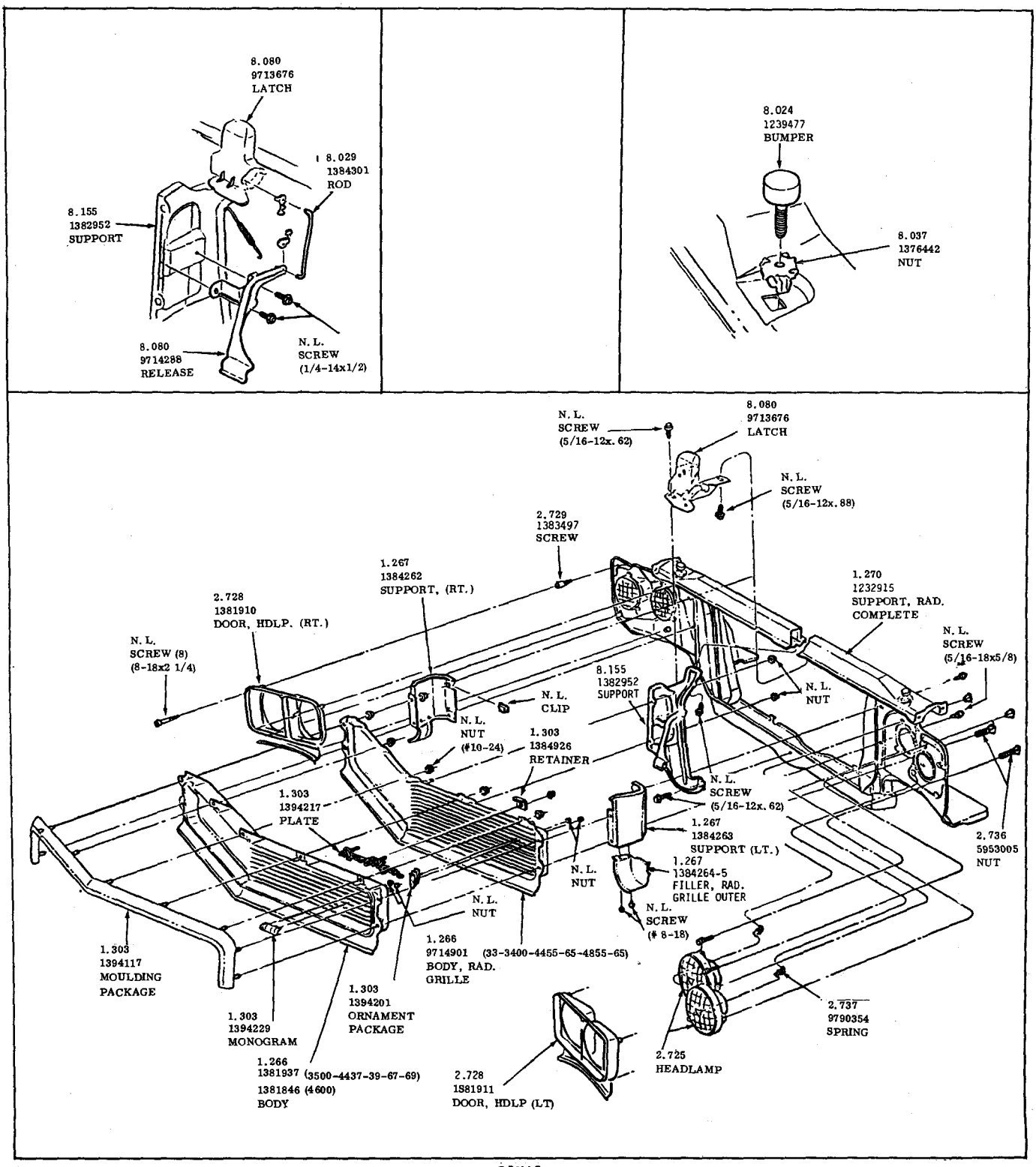

GRILLE
1968 - 30-4000

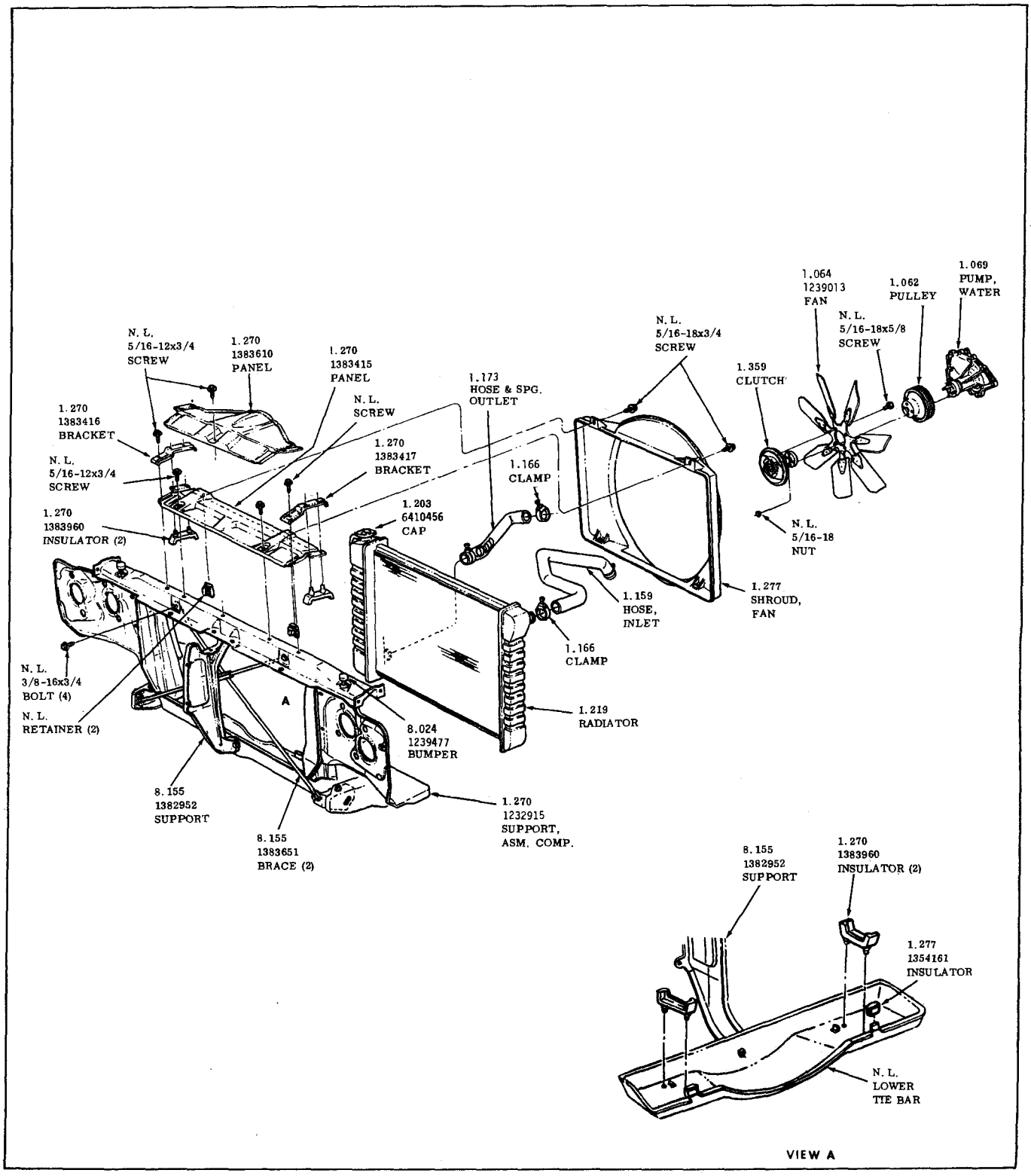

RADIATOR
1968 - 30-4000

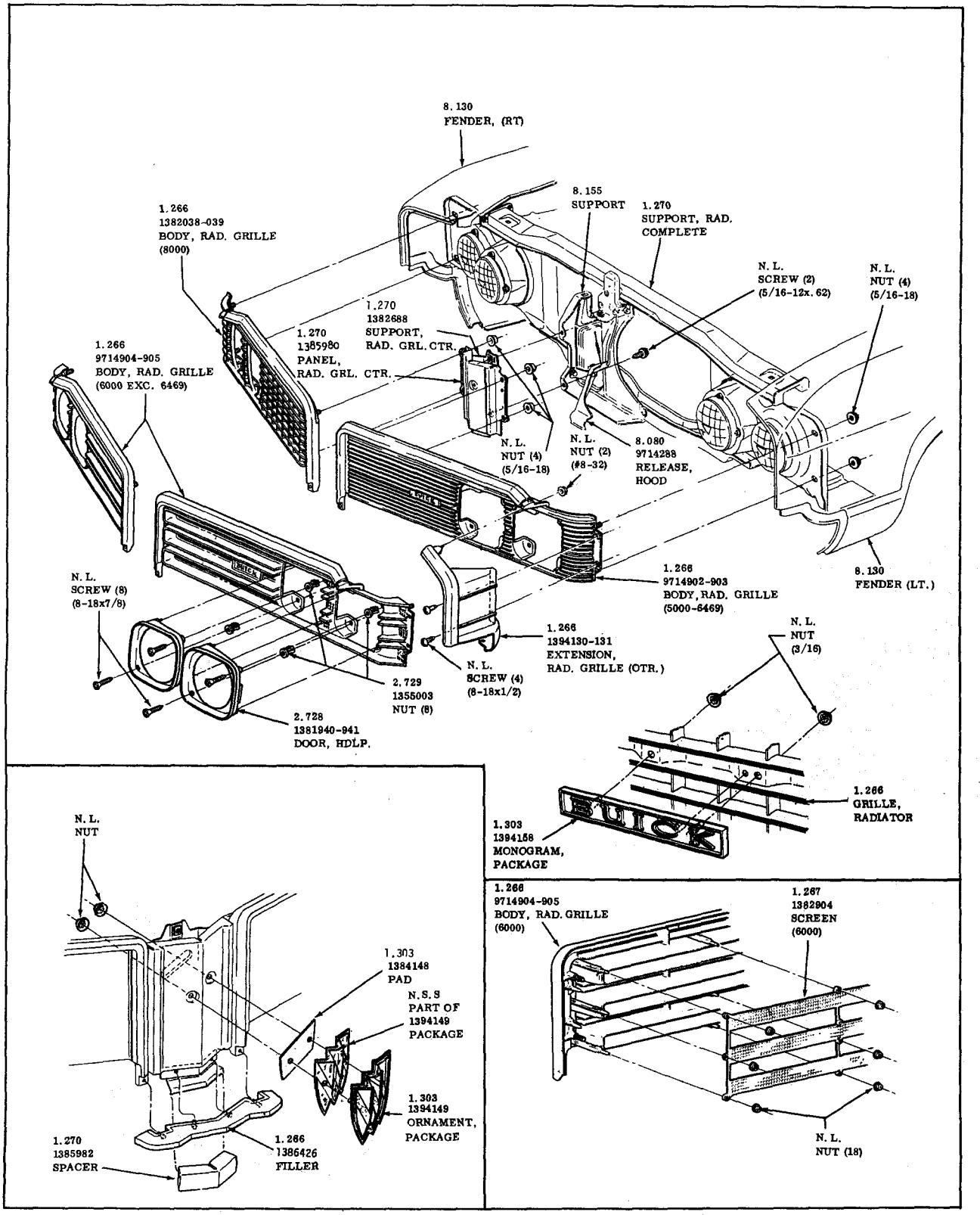

RADIATOR GRILLE & FRONT END SHEET METAL
1968- LESABRE-WILDCAT-ELECTRA 225

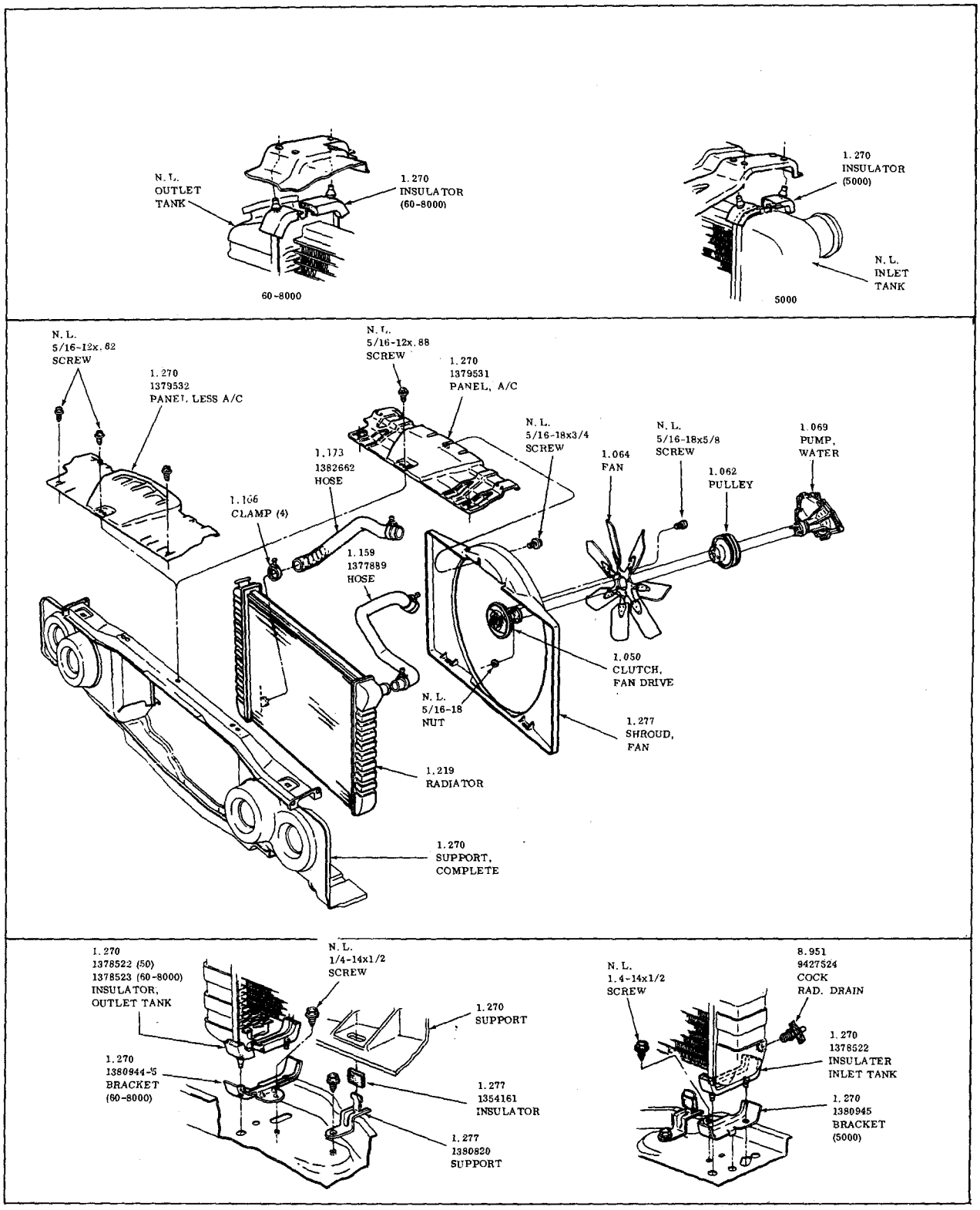

RADIATOR
1968 - 50-60-8000

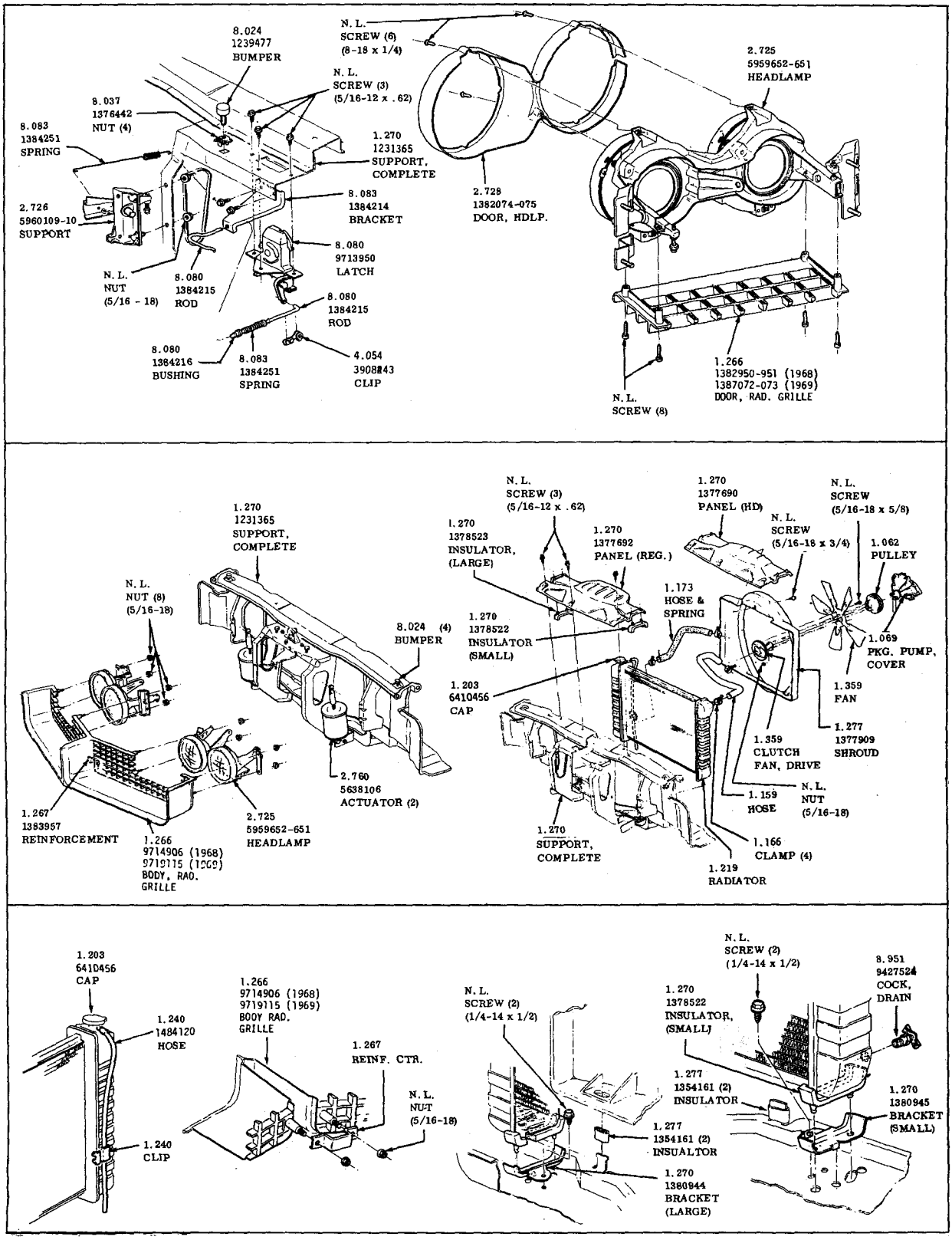

RADIATOR & GRILLE
1968-1969 RIVIERA

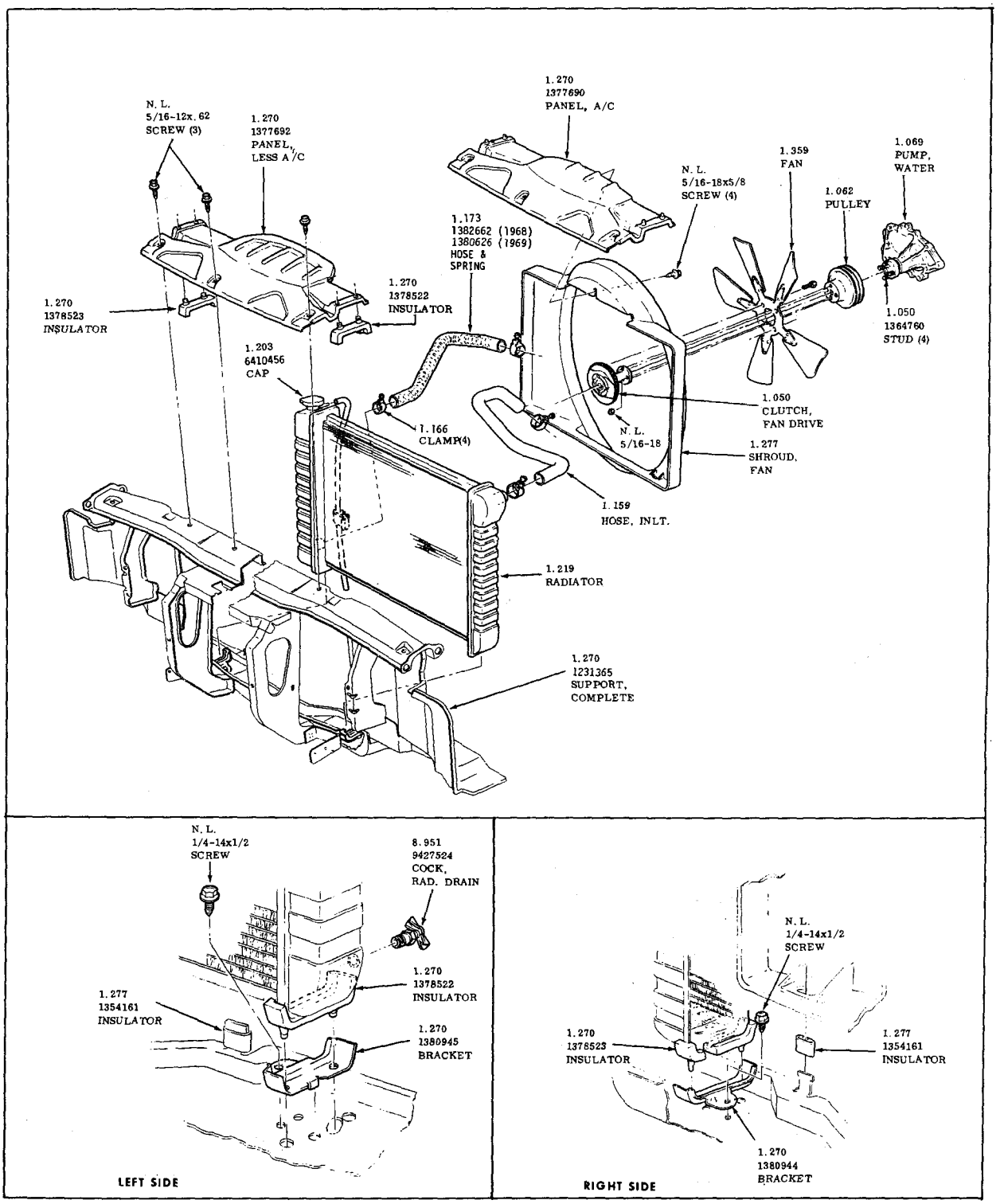

RADIATOR
1968-1969 - RIVIERA

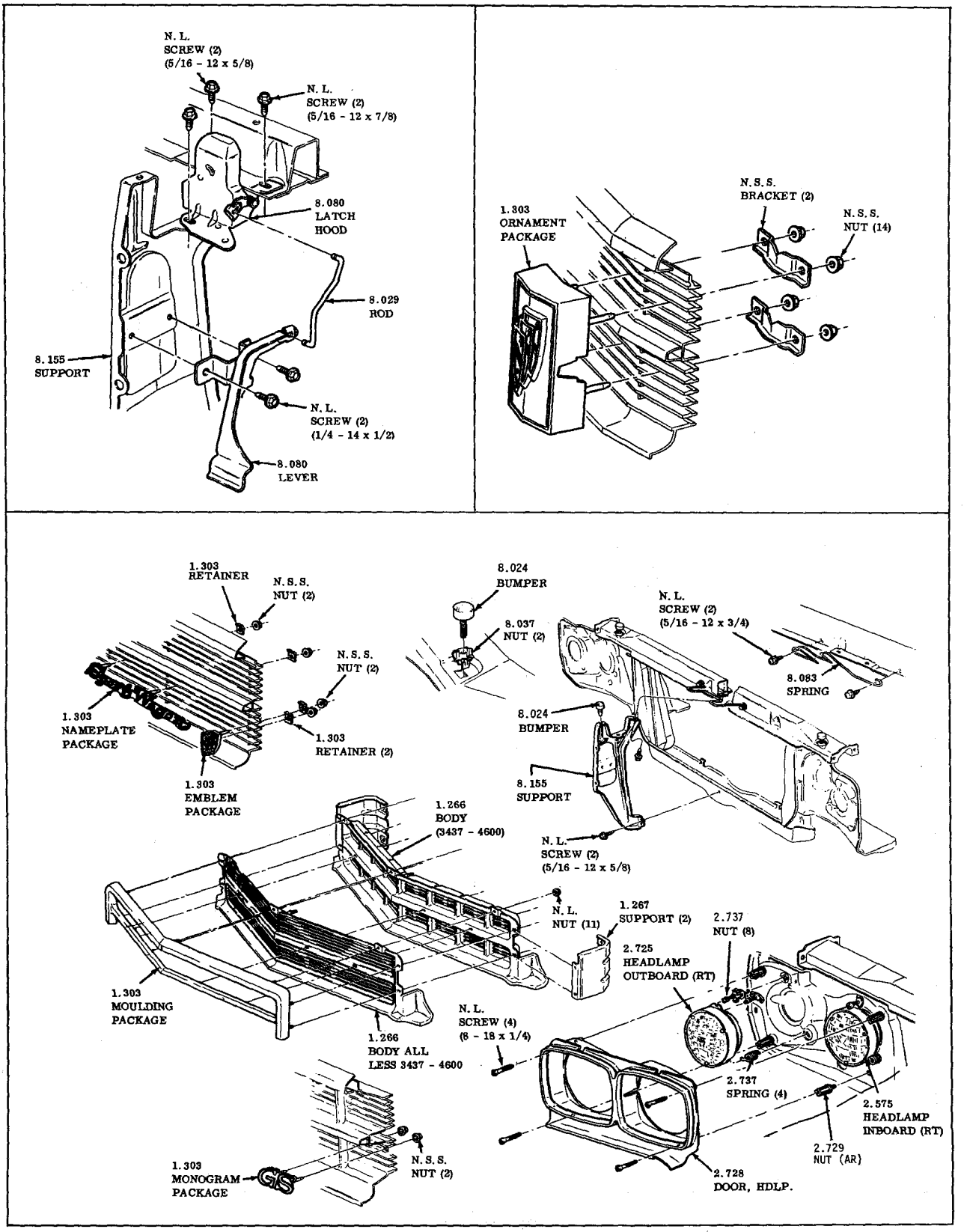

RADIATOR, GRILLE AND FRONT END SHEET METAL
1969-30-4000

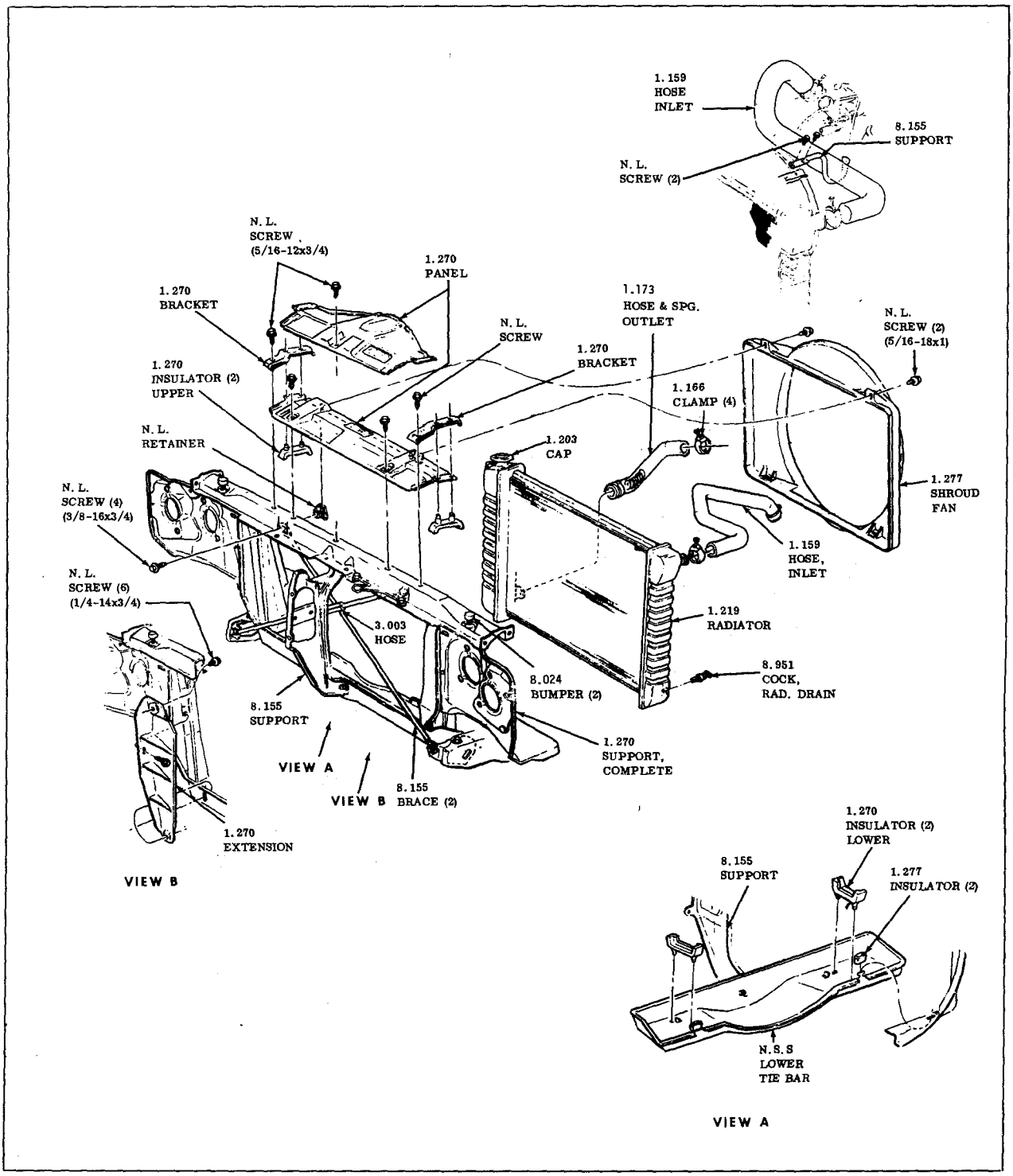

RADIATOR
1969-30-4000

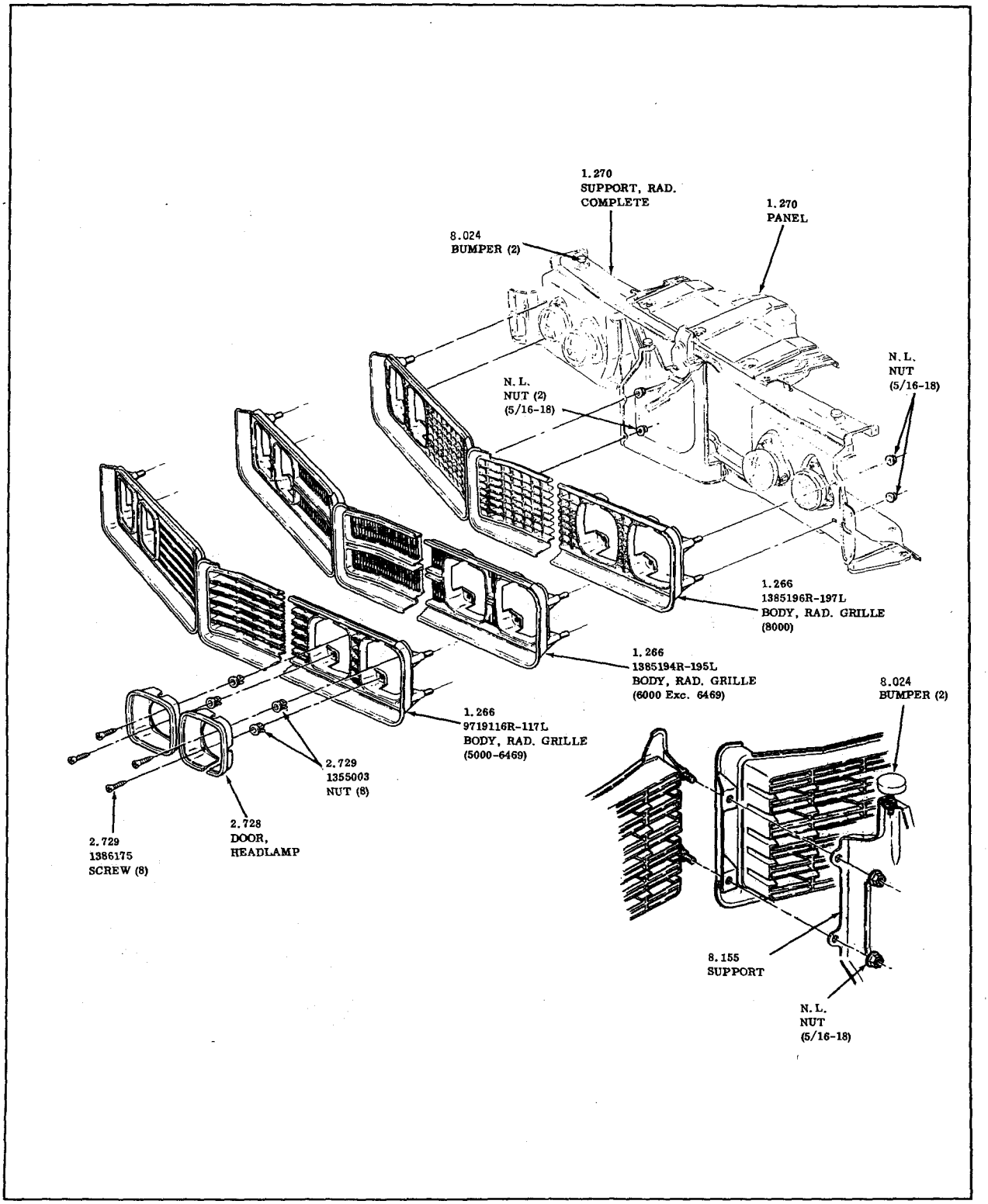

RADIATOR GRILLE & FRONT END
SHEET METAL
1969-50-60-8000

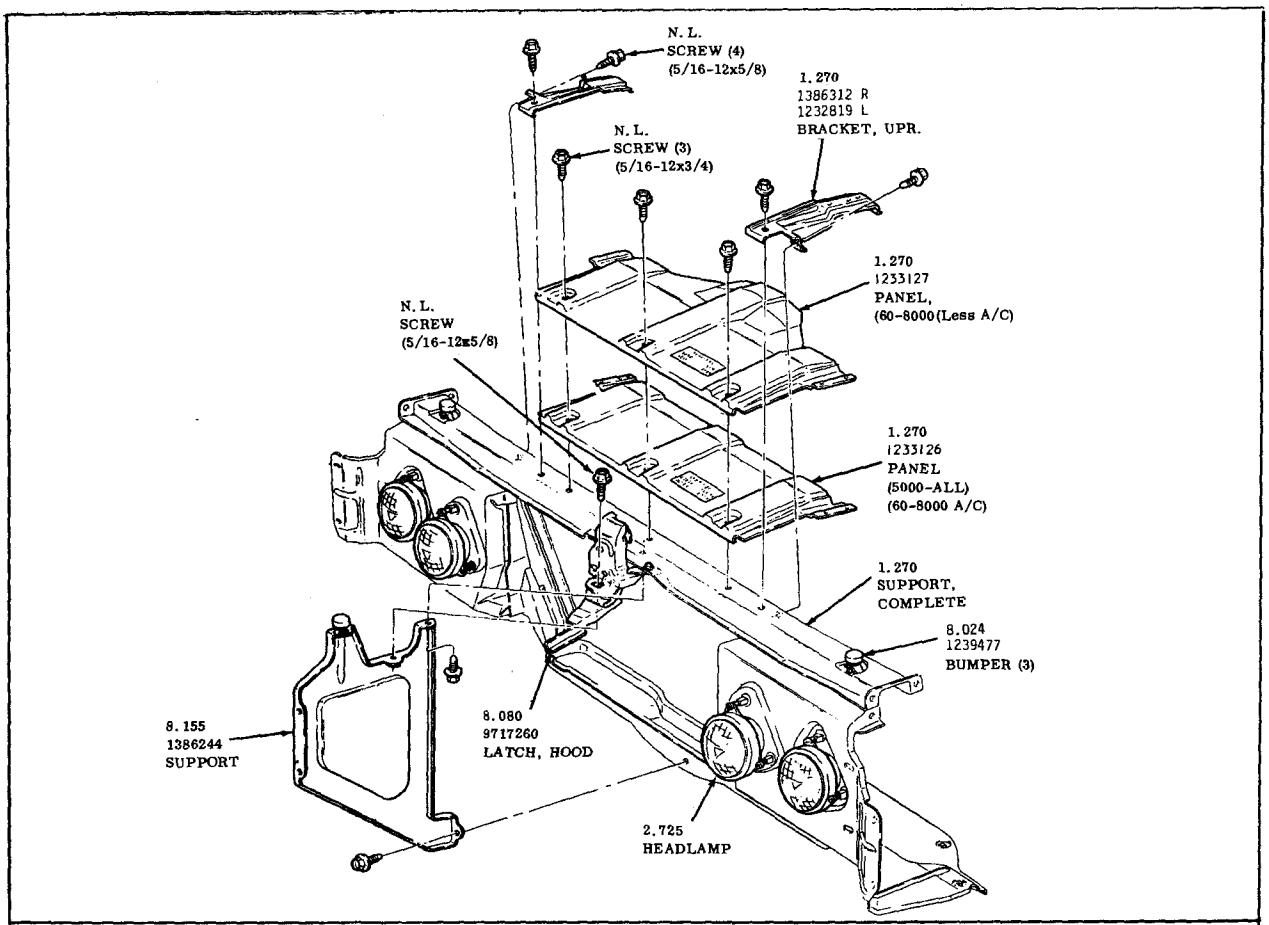

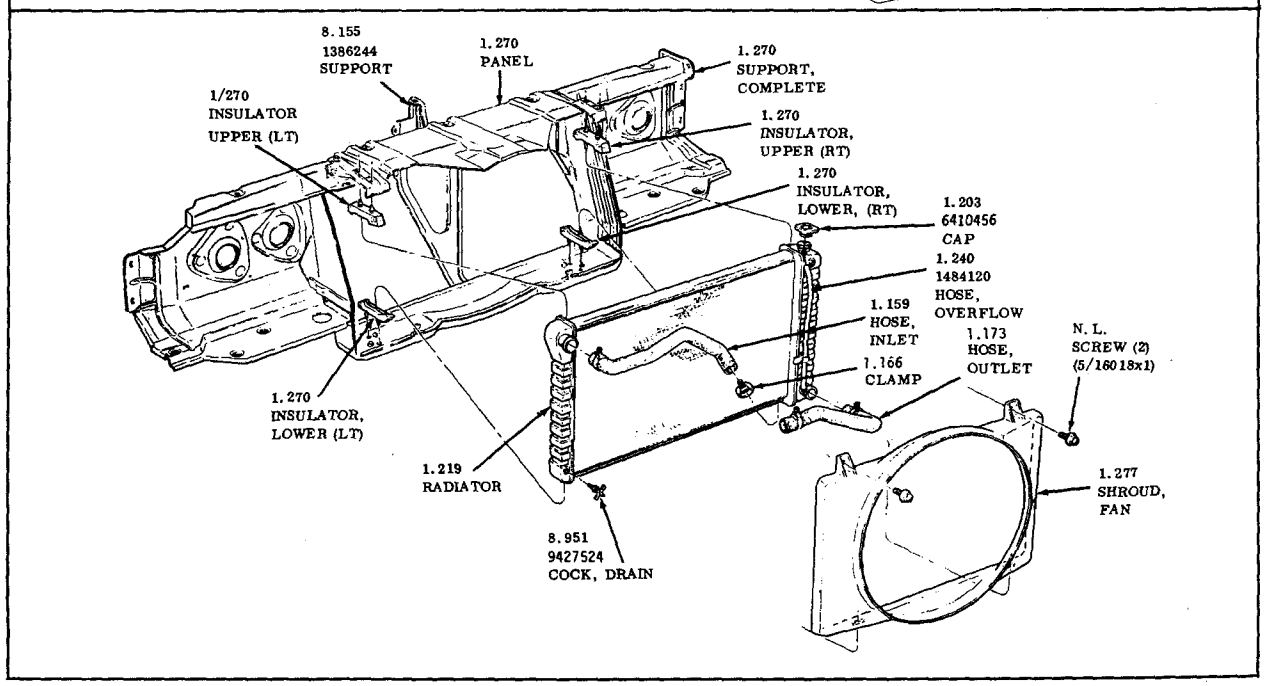

RADIATOR

1969-50-60-8000

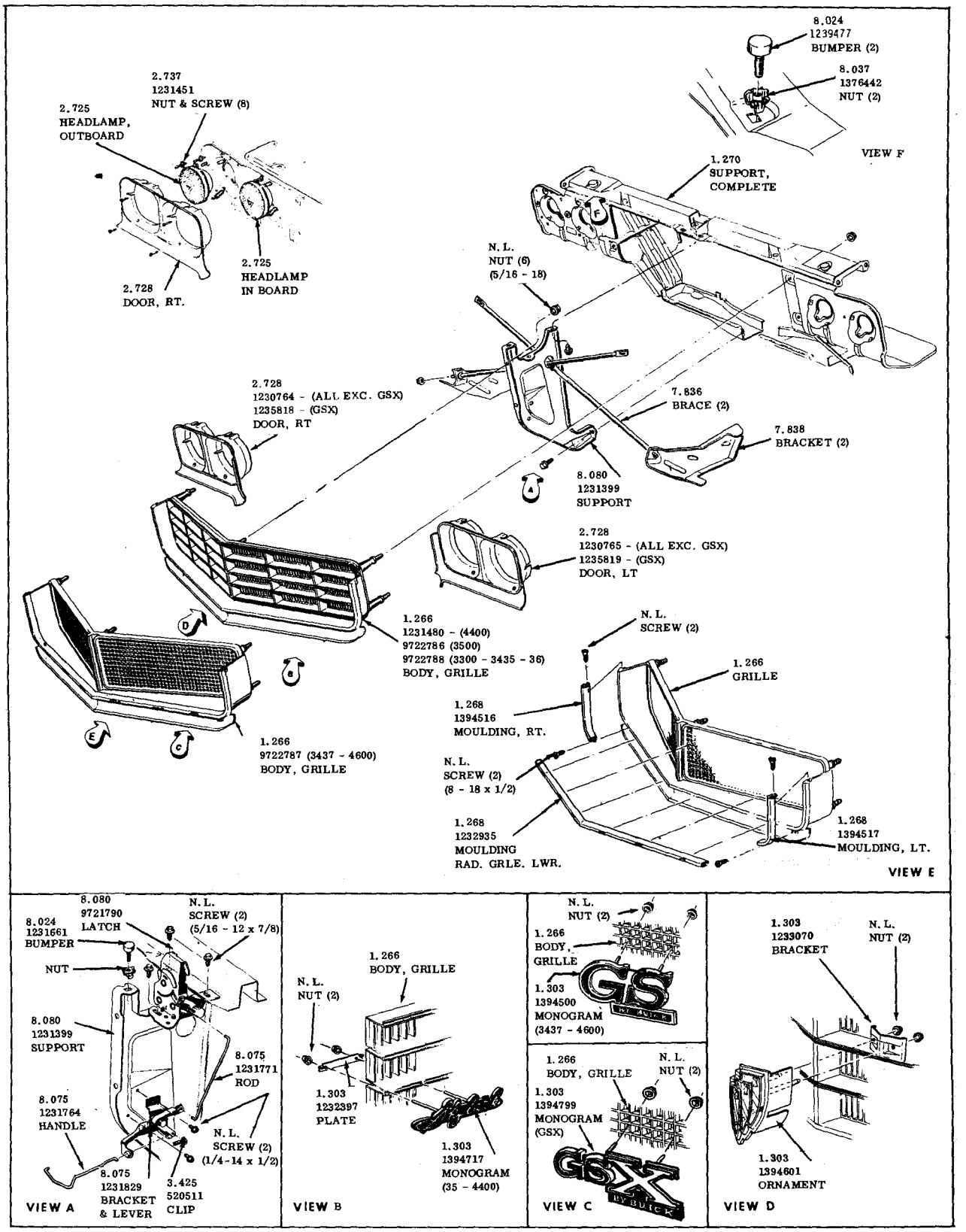

RADIATOR GRILLE & FRONT END SHEET METAL
1970-30-4000

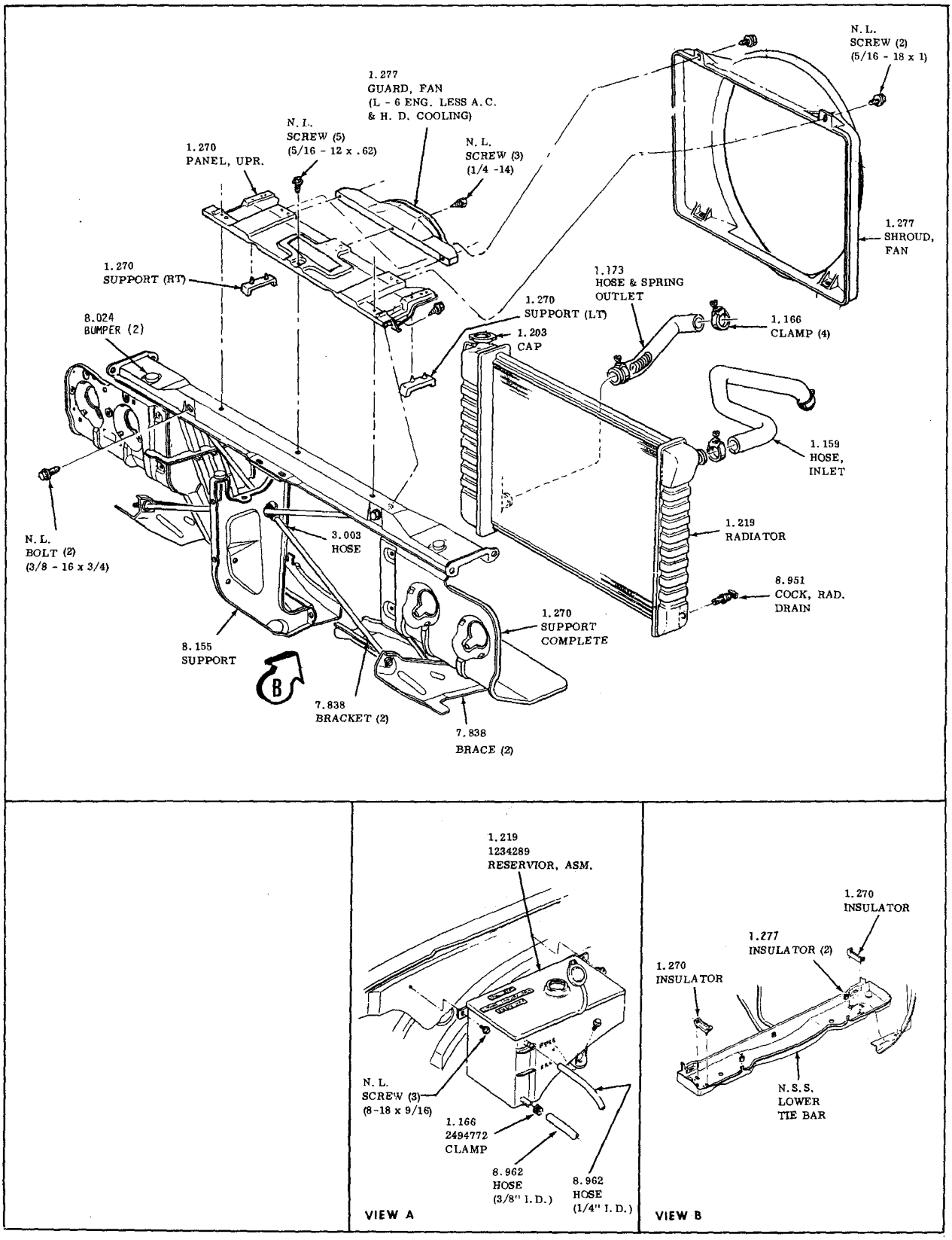

RADIATOR
1970-30-4000

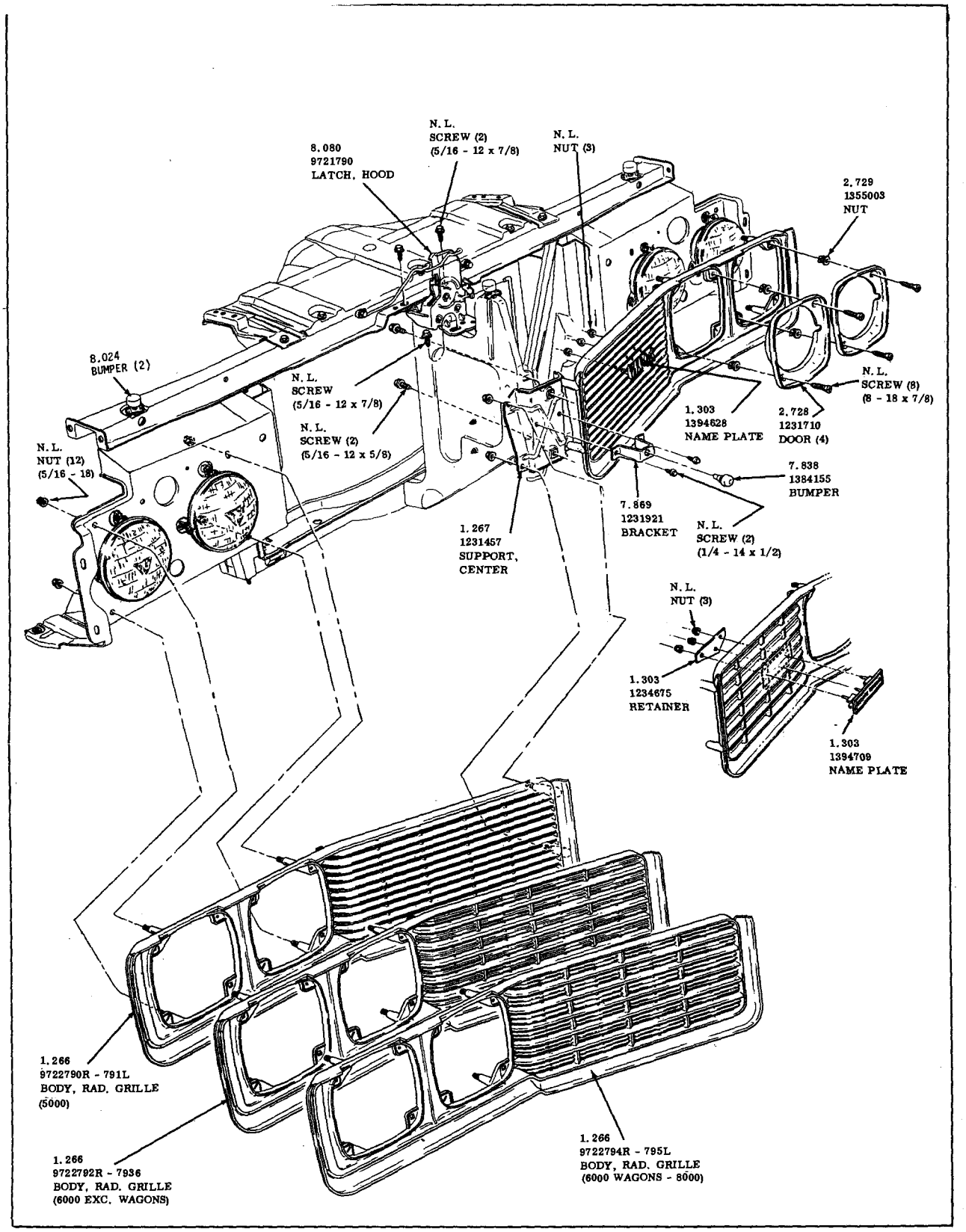

RADIATOR, GRILLE & FRONT END SHEET METAL

1970-50-60-8000

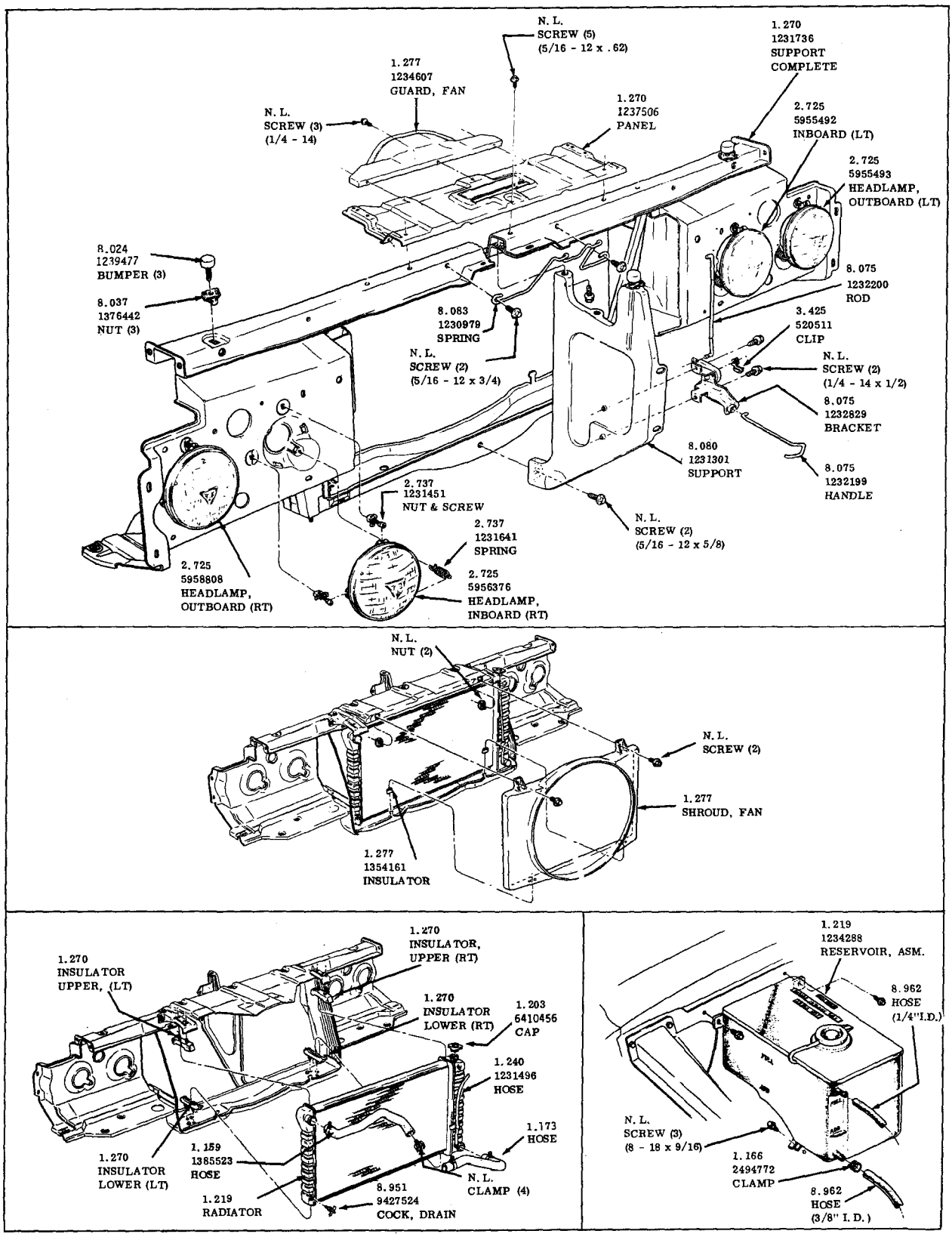

RADIATOR

1970-50-60-8000

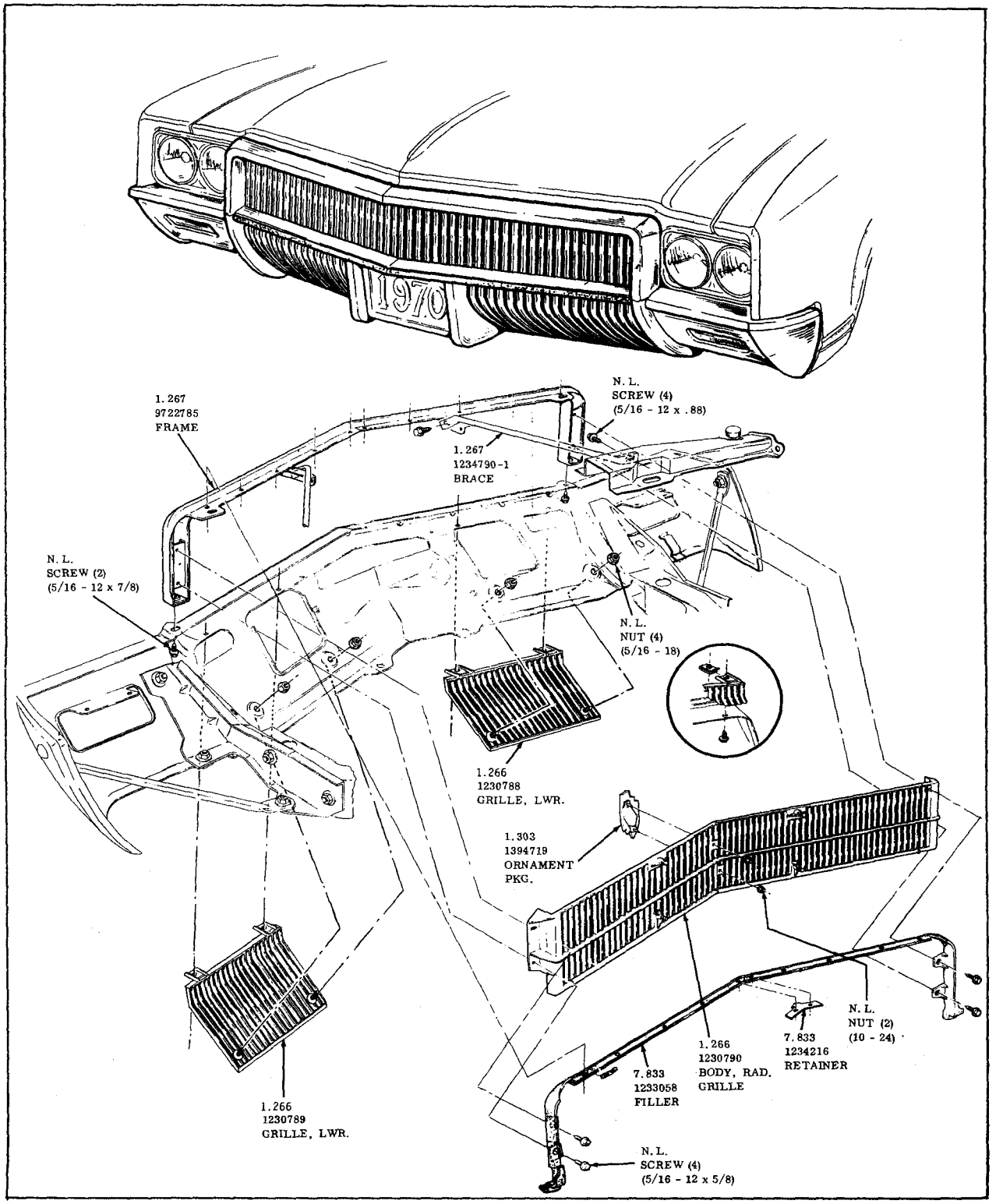

RADIATOR GRILLE
1970-9000

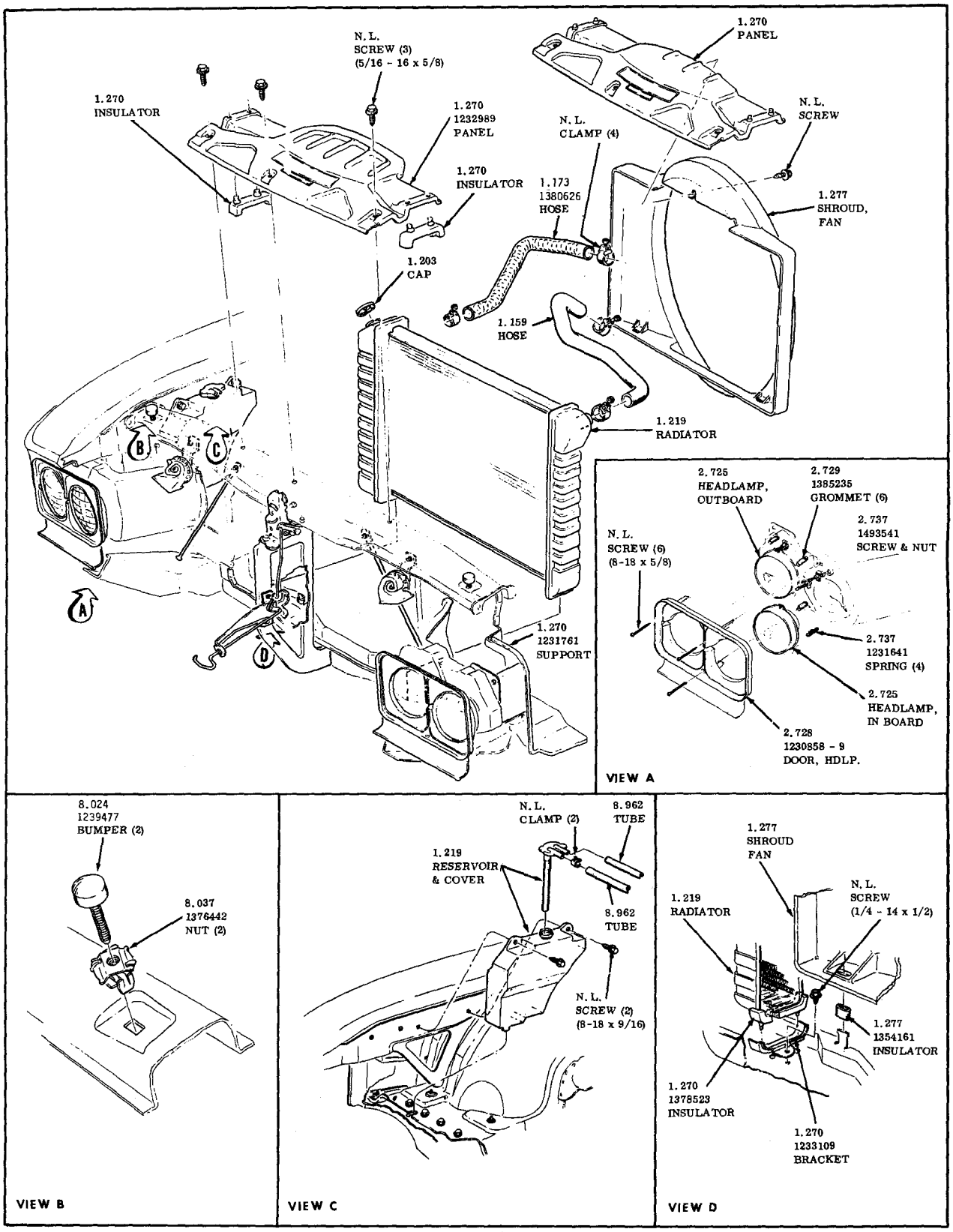

RADIATOR & FRONT END SHEET METAL
1970-9000

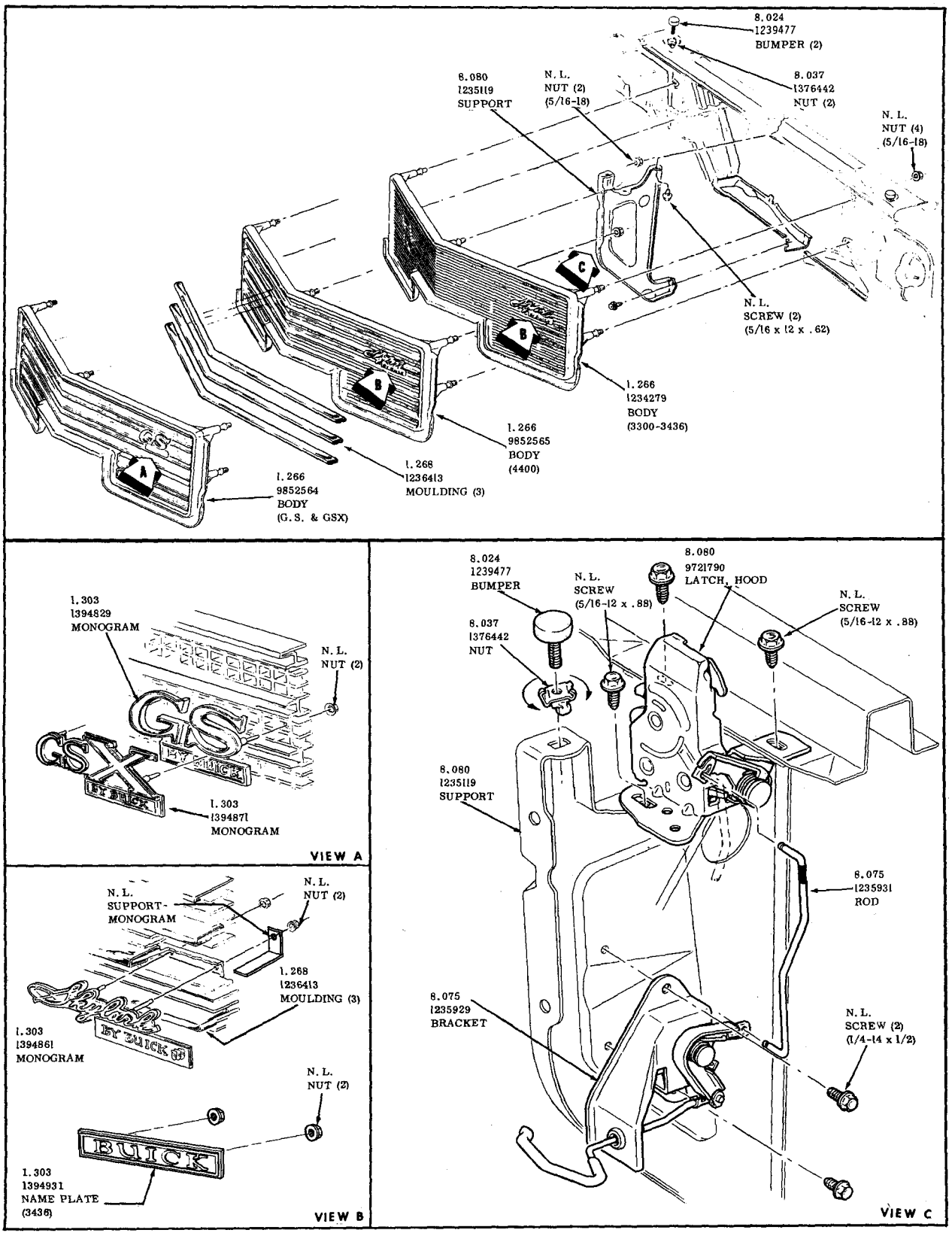

RADIATOR GRILLE

1971-30-4000

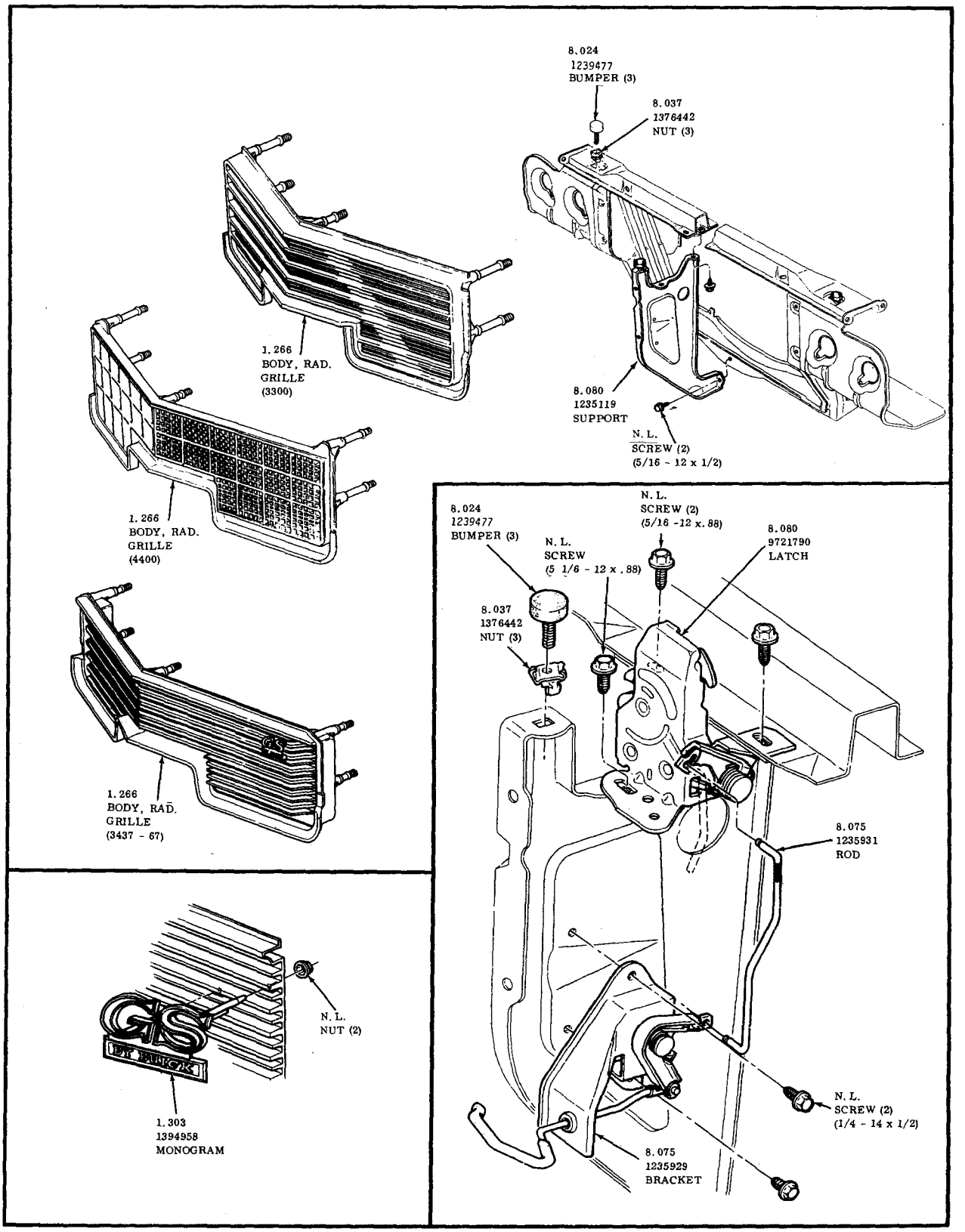

RADIATOR GRILLE

1972-30-4000

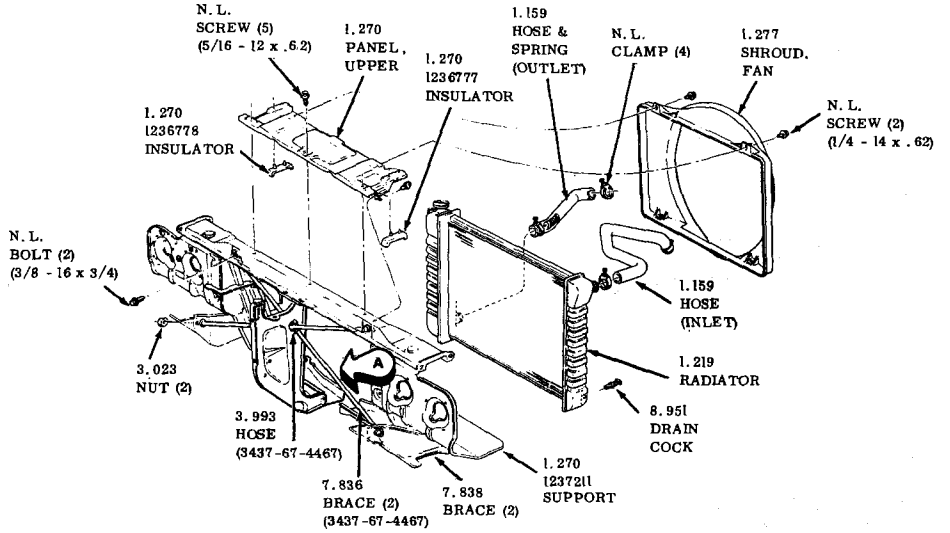

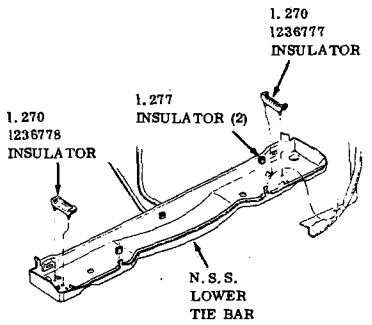

VIEW A

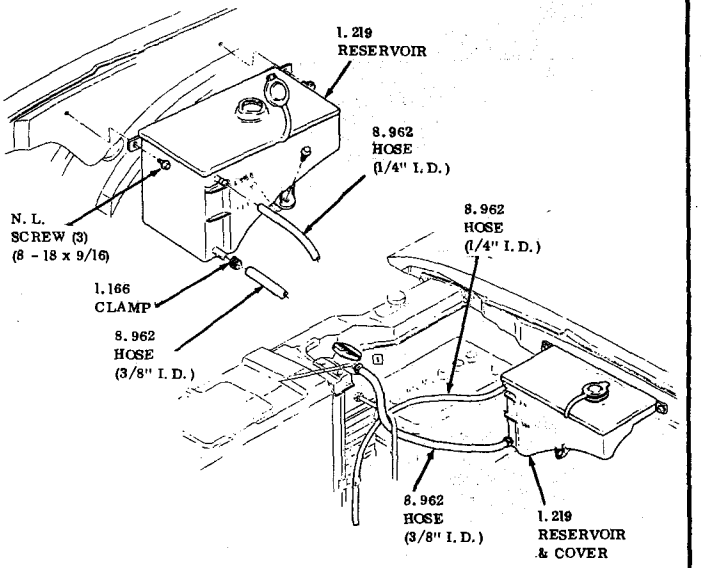

RADIATOR

1971-1972 30-4000

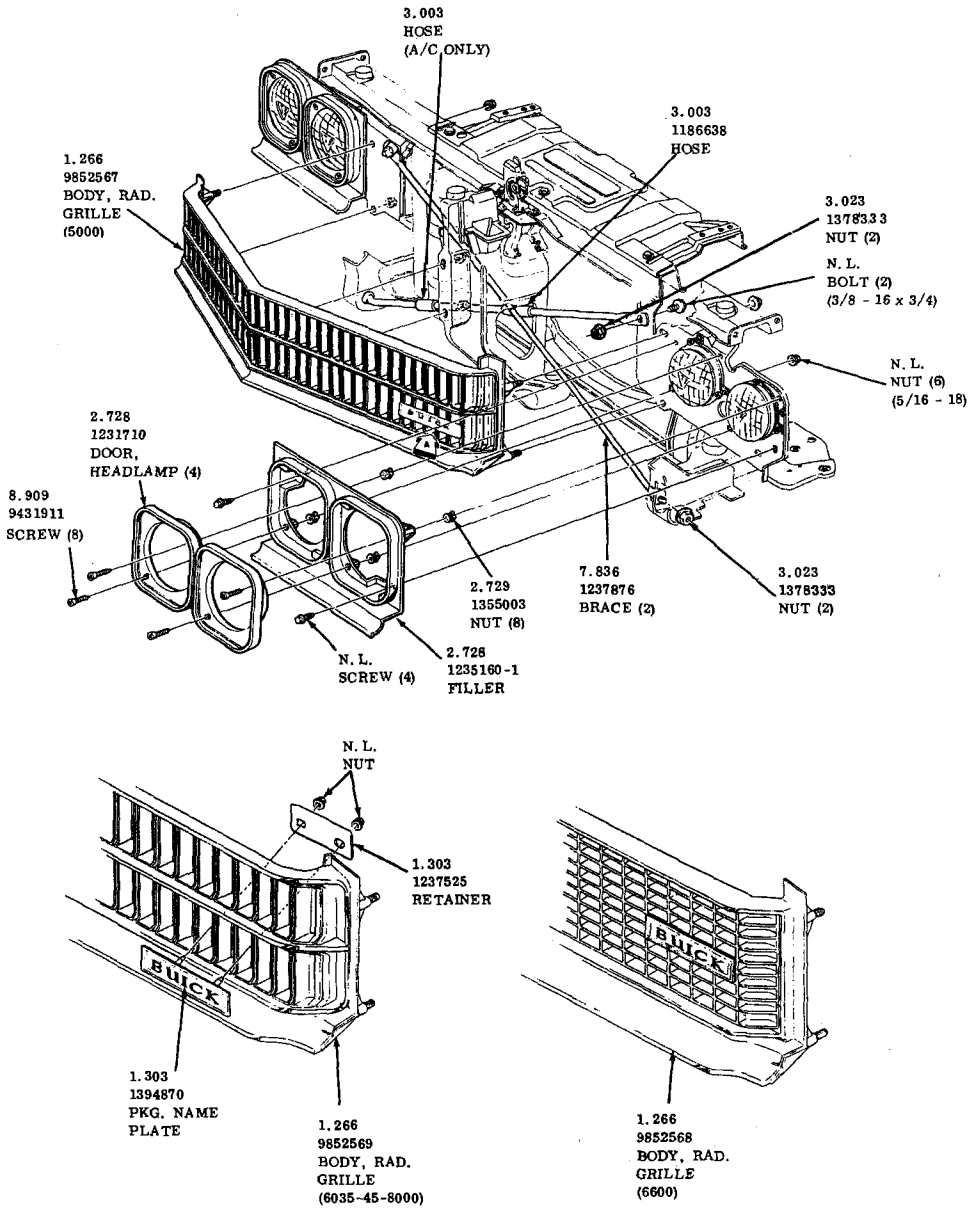

RADIATOR GRILLE

1971-50-60-8000

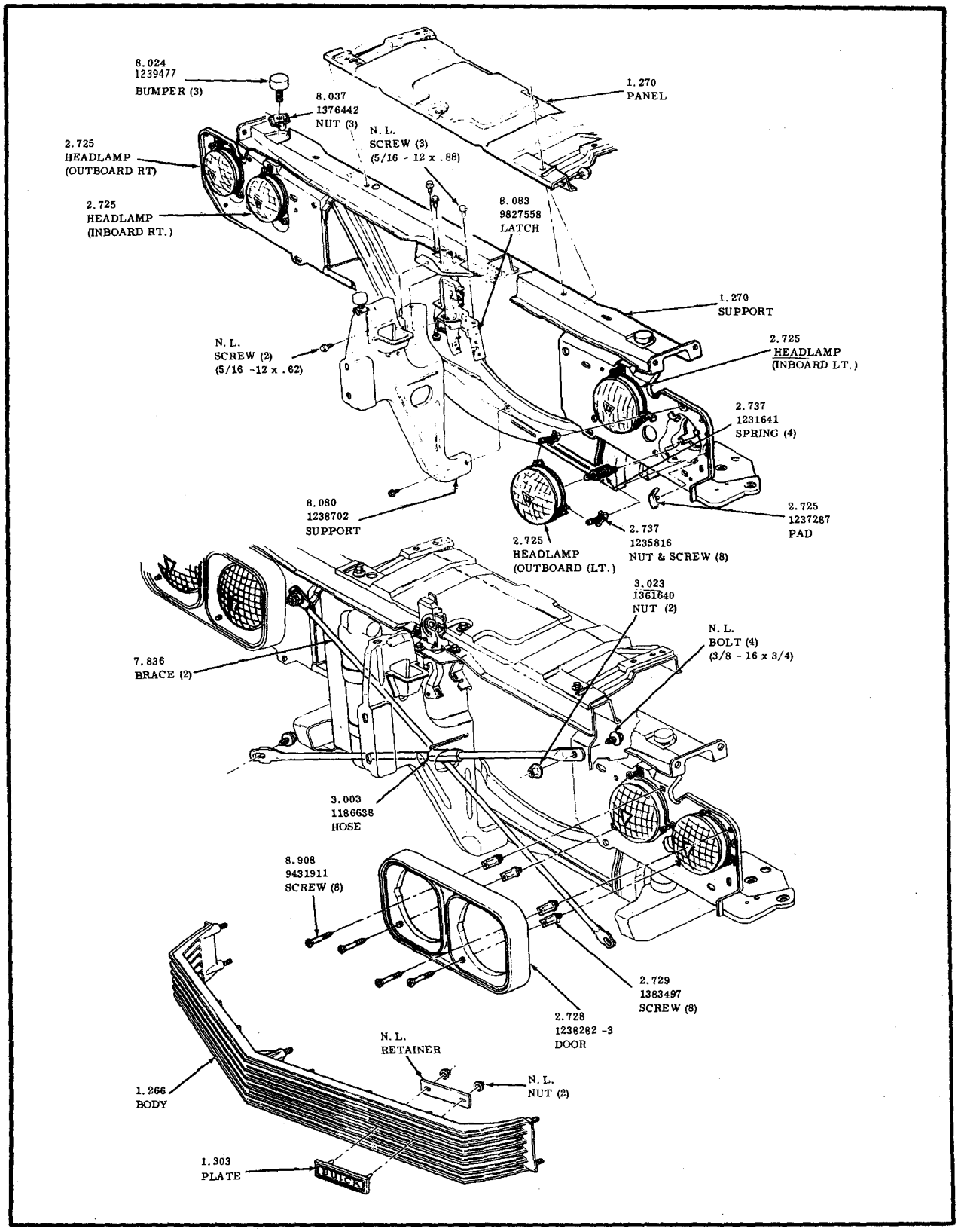

RADIATOR GRILLE

1972-50-60-8000

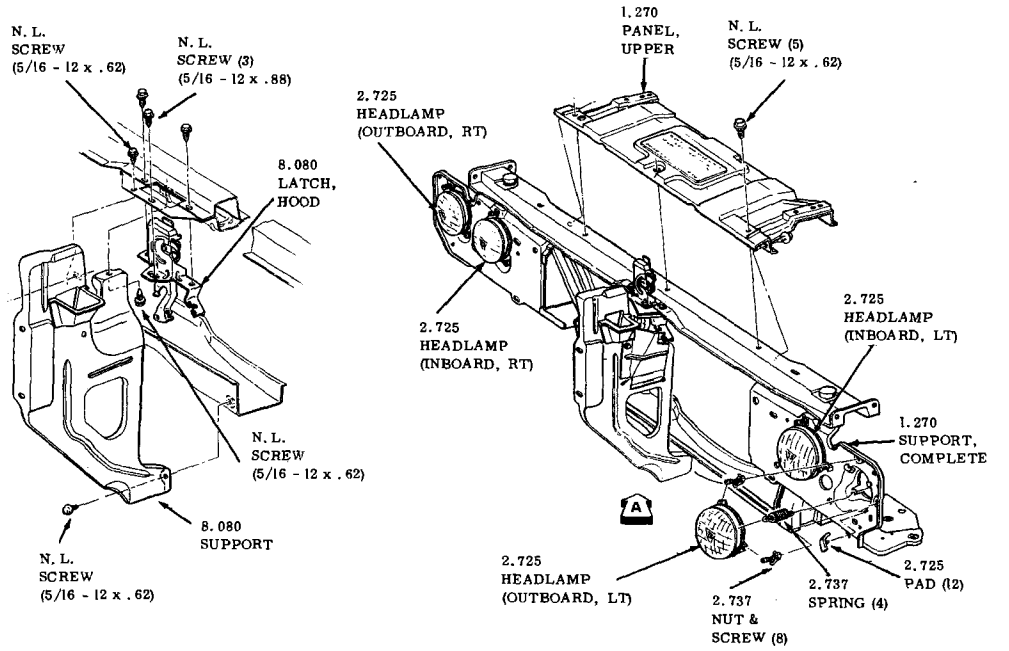

VIEW A

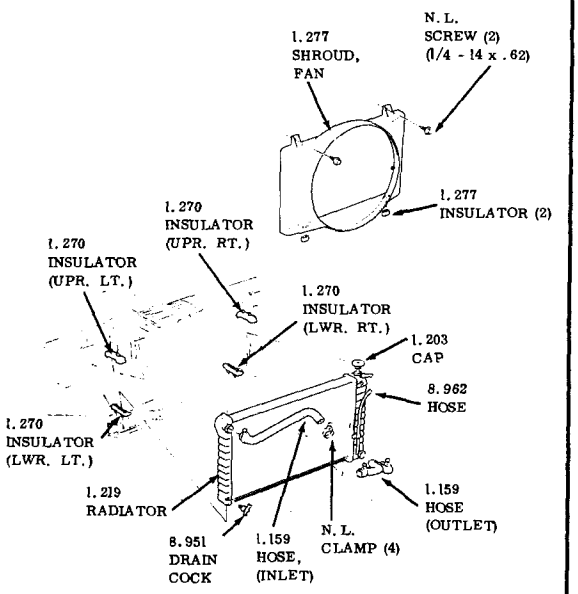

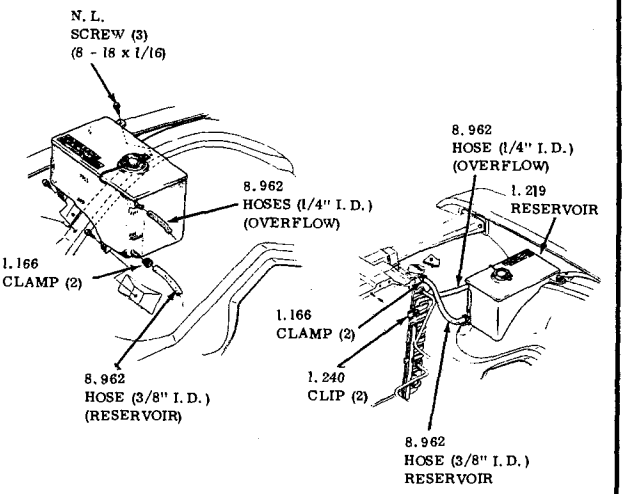

RADIATOR

1971-1972 50-60-8000

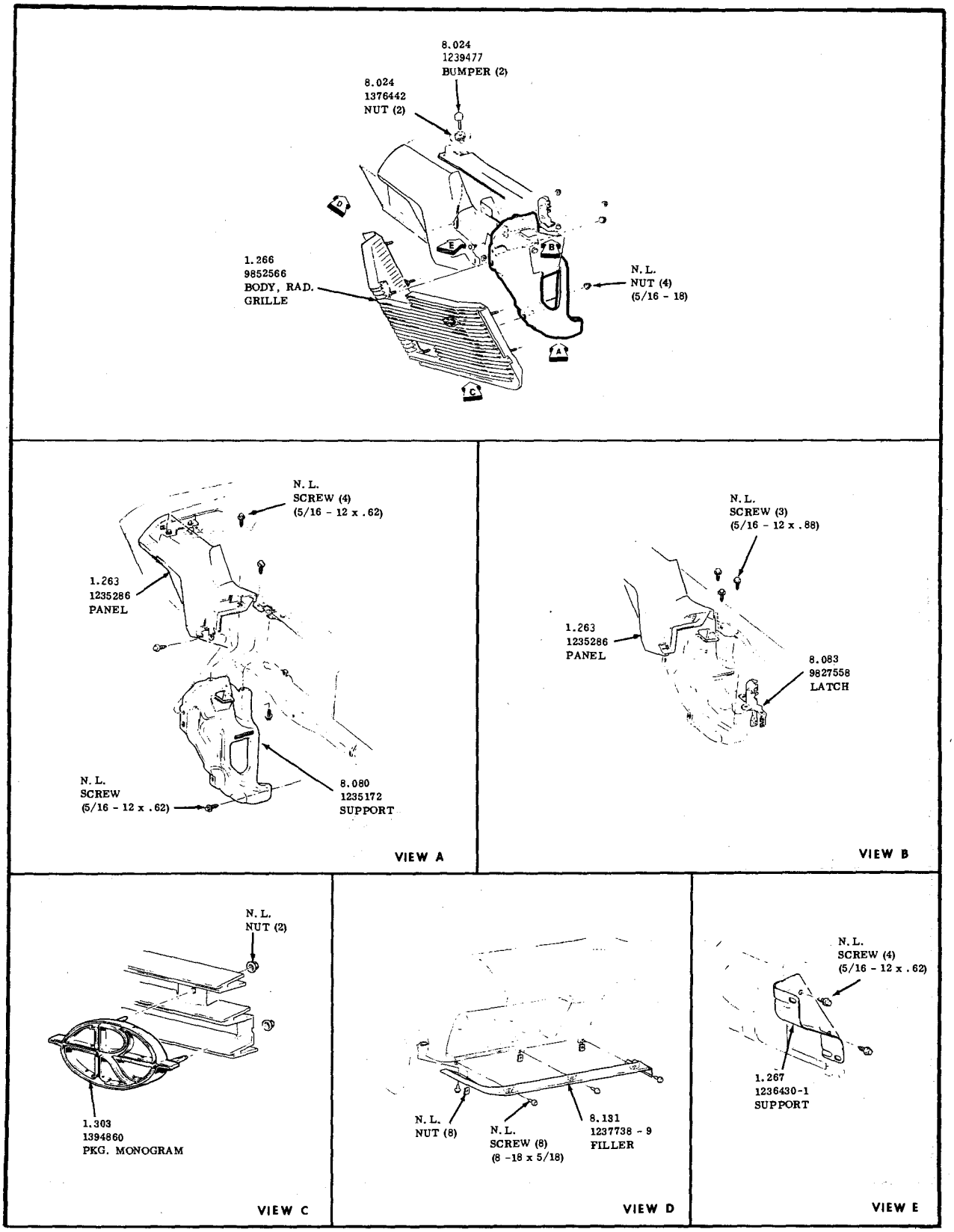

RADIATOR GRILLE

1971-9000

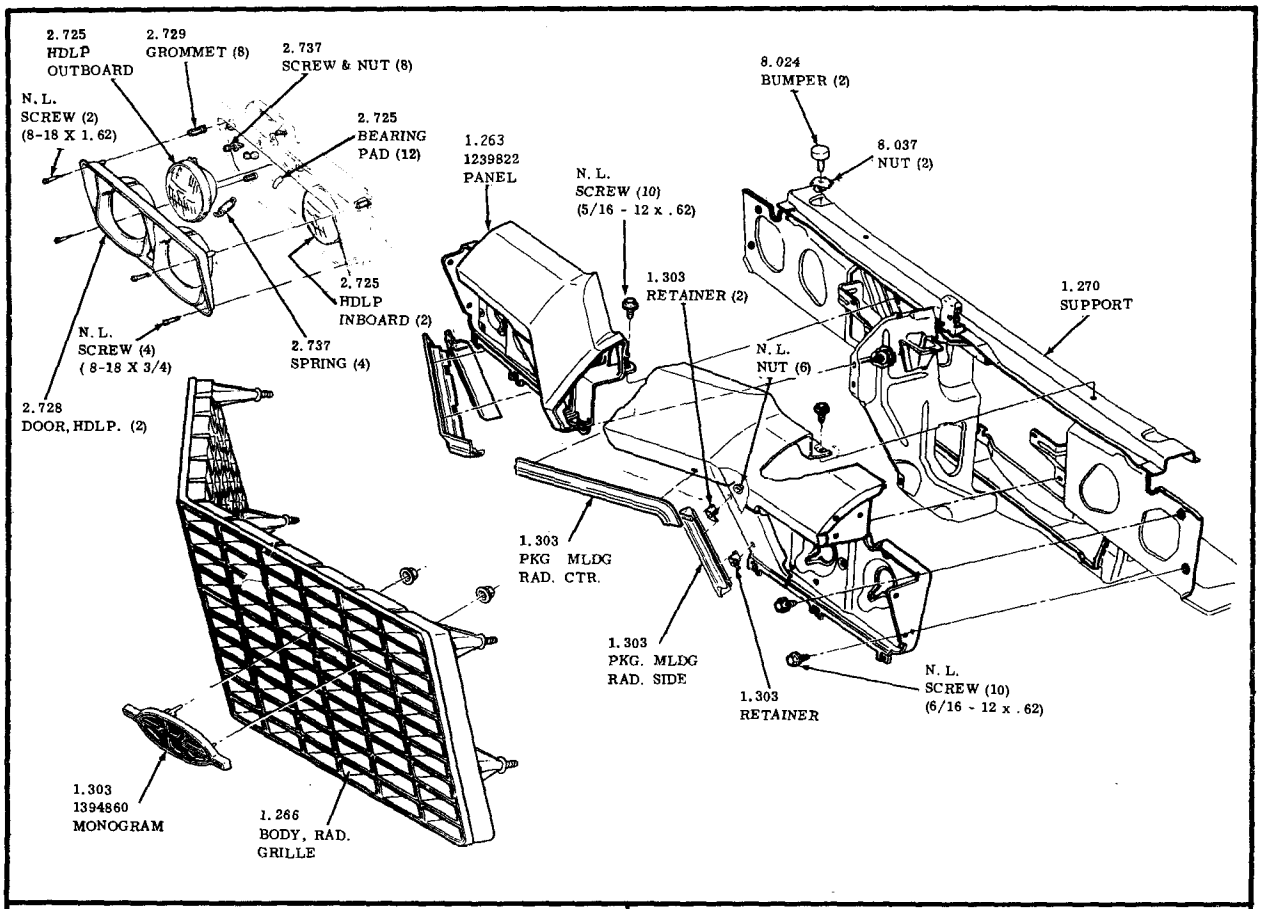

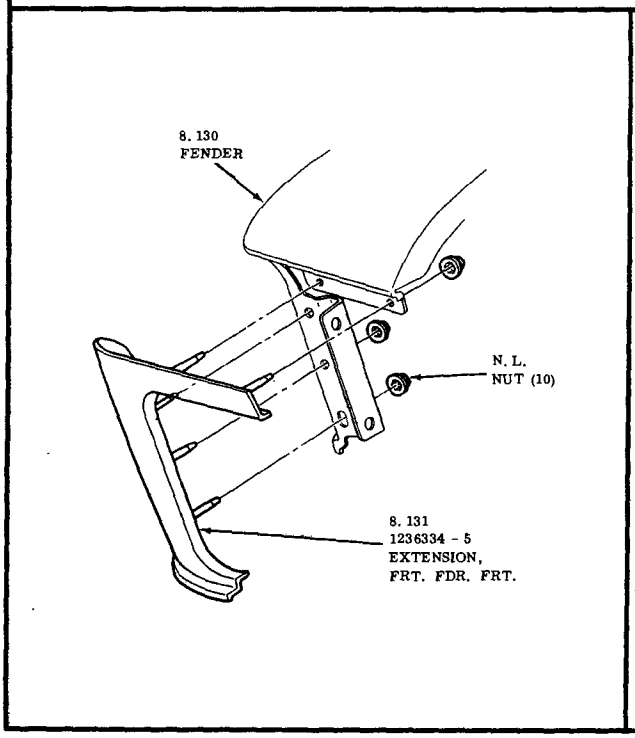

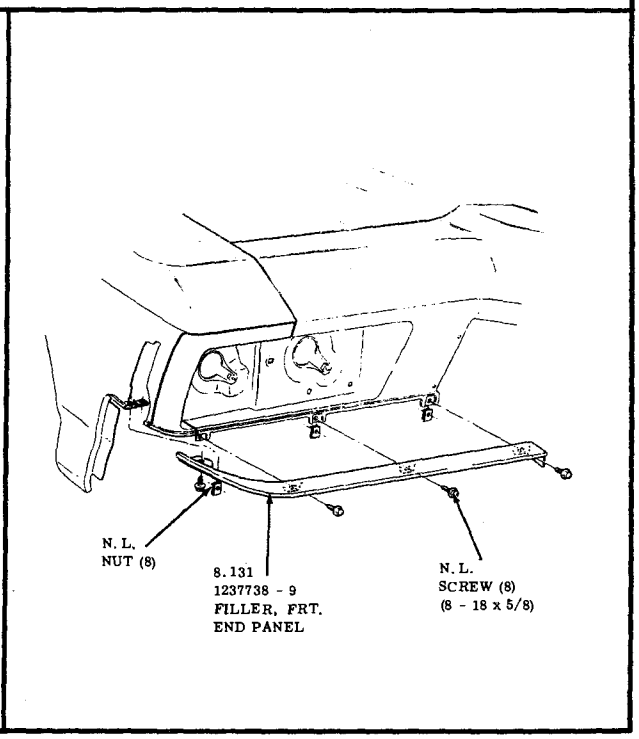

RADIATOR GRILLE

1972-9000

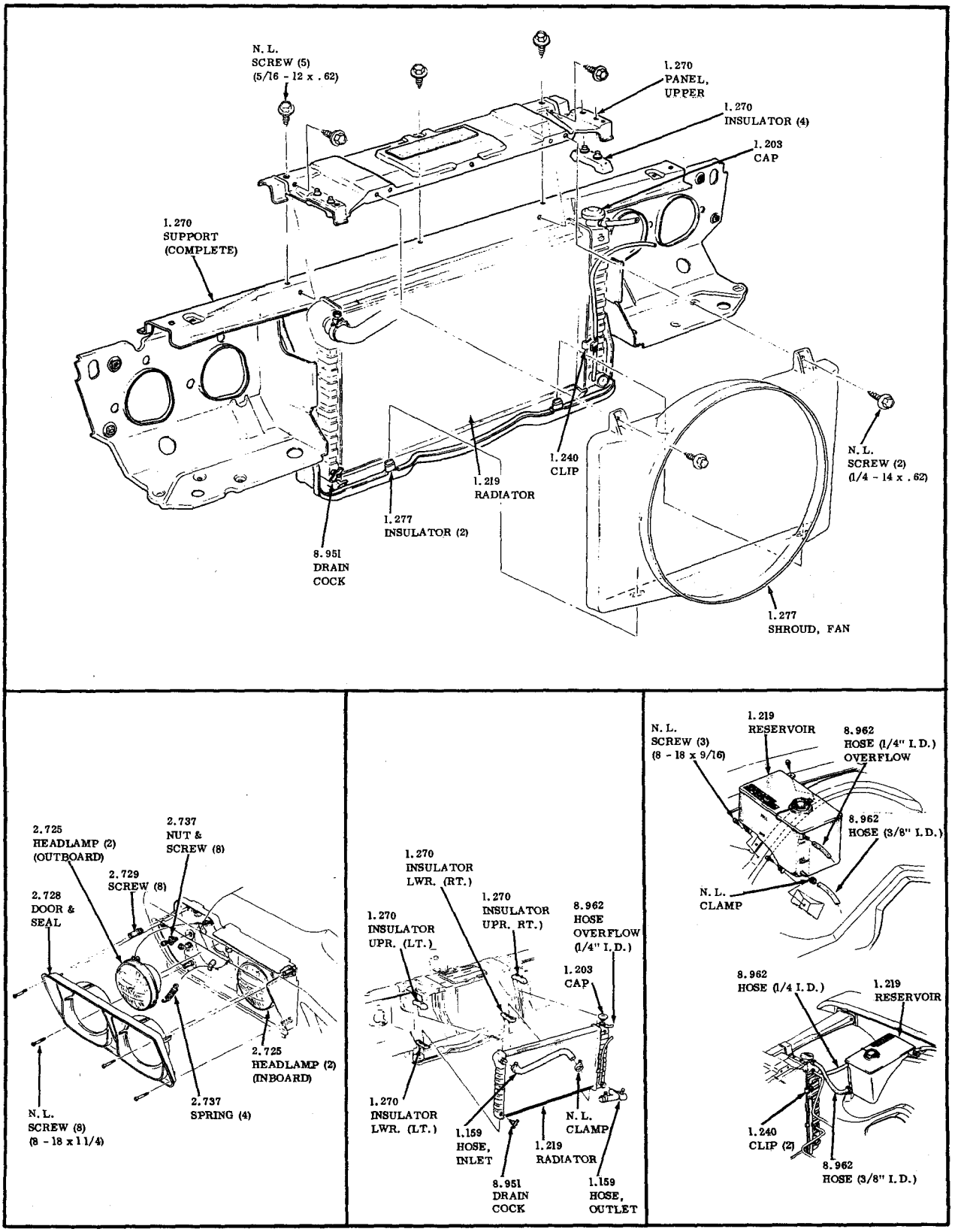

RADIATOR

1971 - 1972 9000

GROUP 2

ELECTRICAL

MEMORANDA

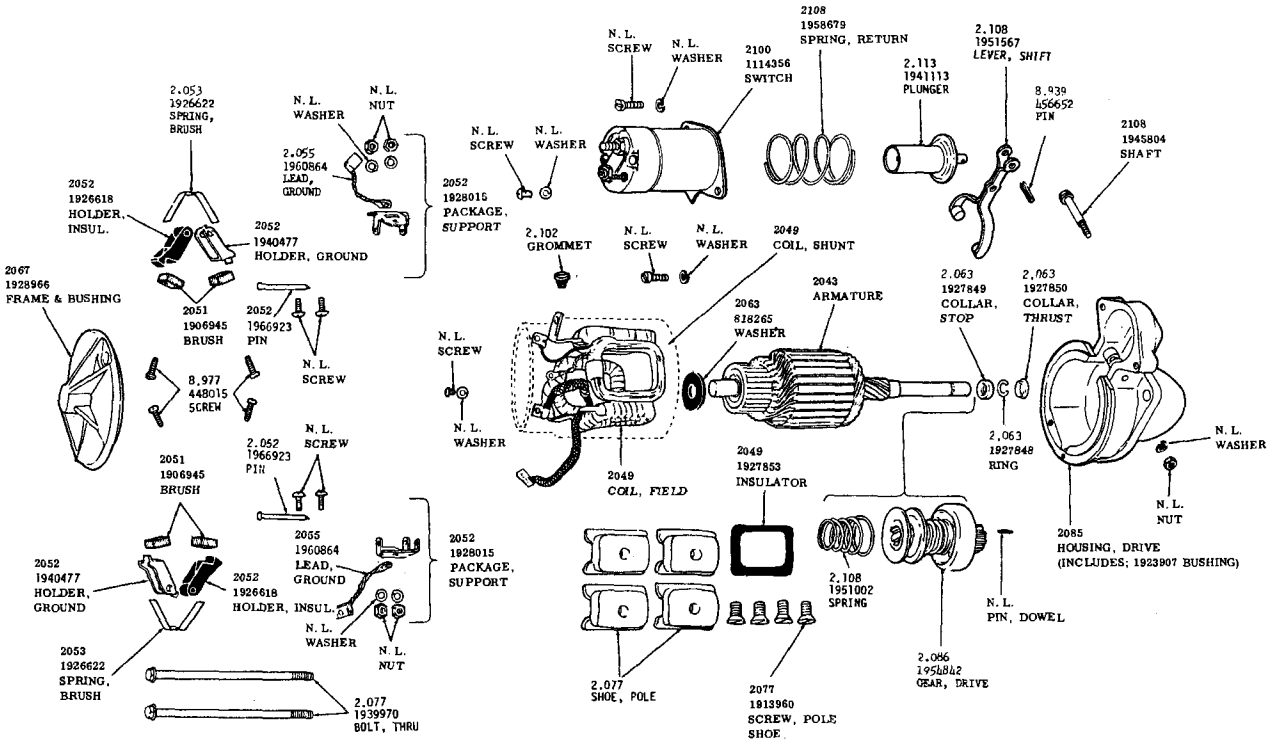

STARTING MOTOR
1964-1972

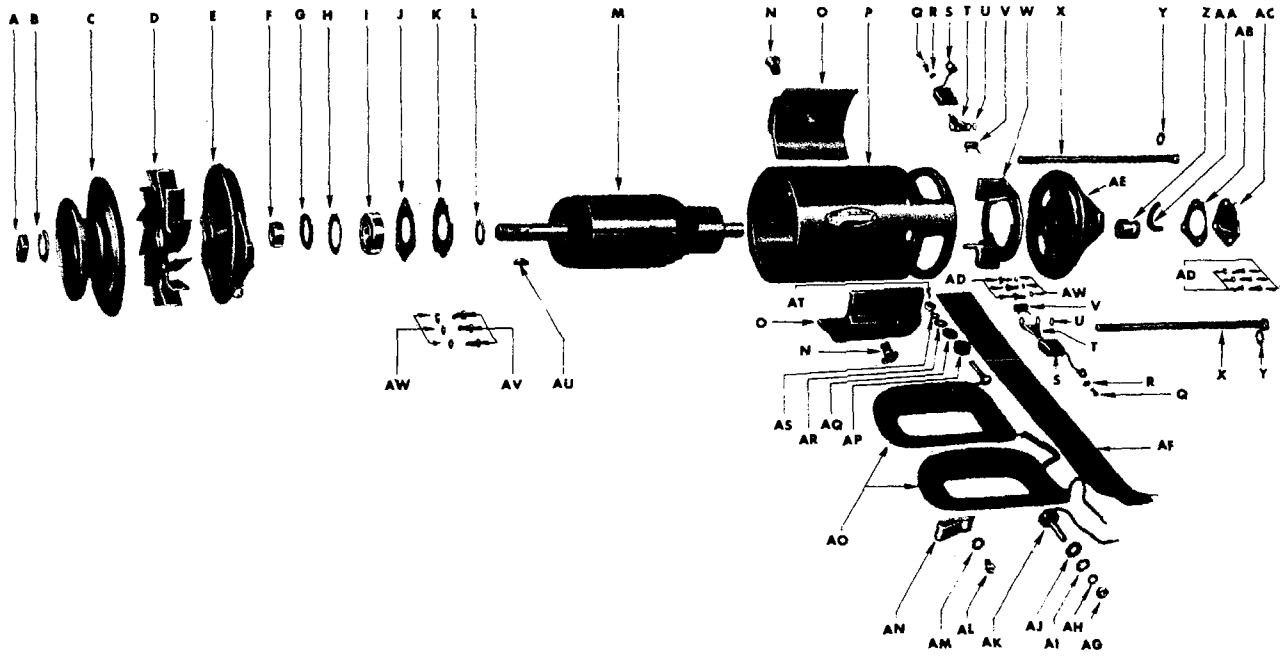

TYPICAL GENERATOR

A	NUT	2.280
B	WASHER, Lock	8.931
C	PULLEY	2.274
D	FAN	2.274
E	FRAME, Drive End	2.305
F	COLLAR	2.307
G	WASHER, Felt	2.307
H	WASHER, Felt Retainer	2.307
I	BEARING, Drive End	2.298
J	GASKET	2.307
K	PLATE	2.307
L	WASHER, Spacing	2.307
M	ARMATURE	2.279
N	SCREW	N.L.
O	SHOE, Pole	N.L.
P	HOUSING	N.L.
Q	SCREW	8.906
R	WASHER, Lock	8.931
S	BRUSH	2.285
T	ARM, Brush Holder	2.291
U	WASHER, Spacing	2.307
V	SPRING, Brush	2.286
W	PLATE, Brush	N.L.
X	BOLT, Through	2.316
Y	WASHER, Lock	8.931
Z	BUSHING, Commutator End	2.298
AA	WICK	N.L.
AB	GASKET	N.L.
AC	CAP, Dust	N.L.
AD	SCREW & LOCKWASHER	N.L.
AE	FRAME, Commutator End	2.297
AF	BAND, Cover	N.L.
AG	NUT	8.915
AH	WASHER, Lock	8.931
AI	WASHER, Plain	8.929
AJ	WASHER, Insulating	N.L.
AK	STUD, Insulator & Lead	N.L.
AL	SCREW	8.907
AM	WASHER, Lock	8.931
AN	CLIP, Wire	N.L.
AO	COIL SET	2.310
AP	SPACER, Insulating	N.L.
AQ	WASHER, Insulating	N.L.
AR	WASHER, Plain	8.929
AS	WASHER, Lock	8.931
AT	NUT	8.915
AU	KEY	N.L.
AV	SCREW	2.307
AW	WASHER, Lock	2.307

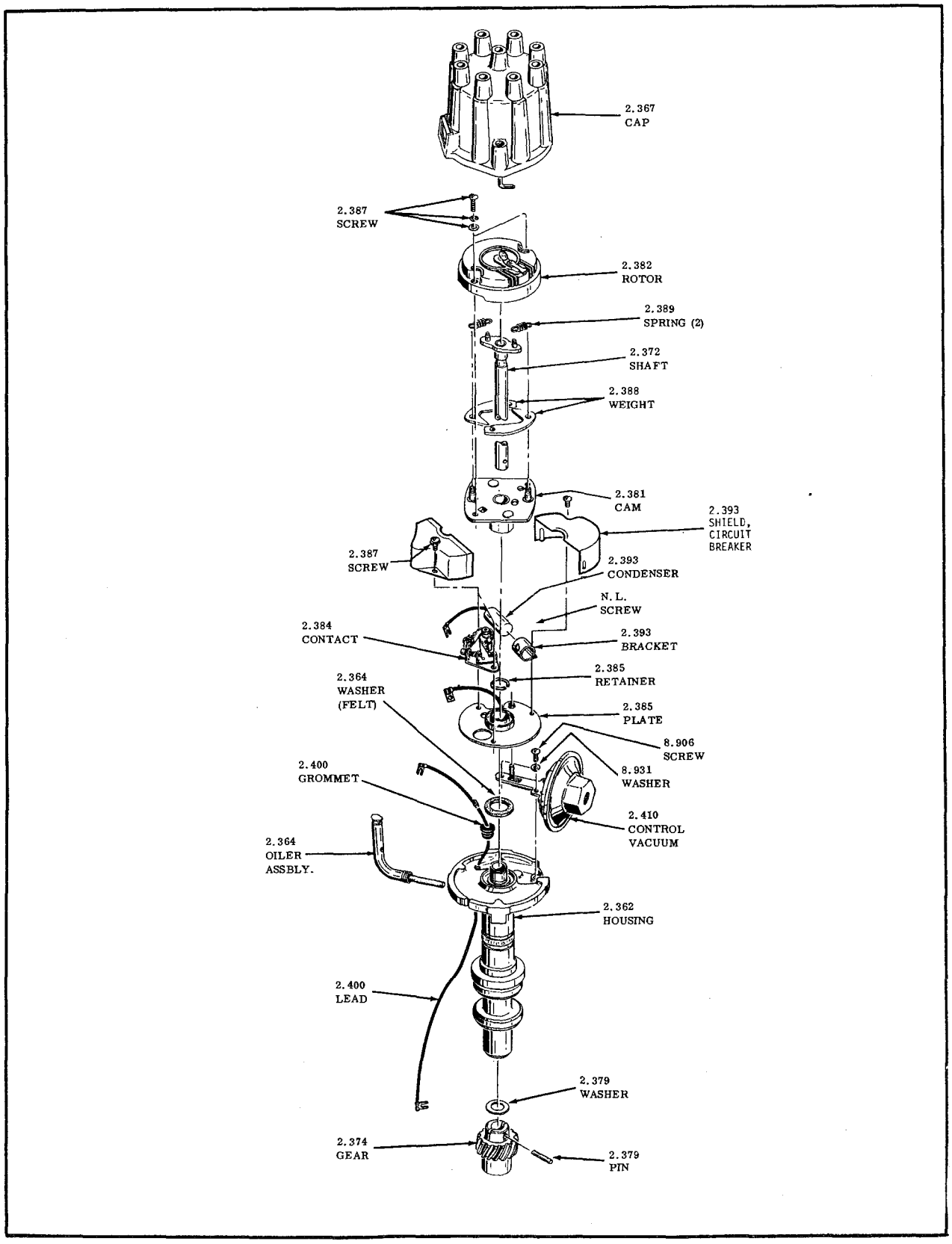

IGNITION DISTRIBUTOR
1959–1972 (TYPICAL)

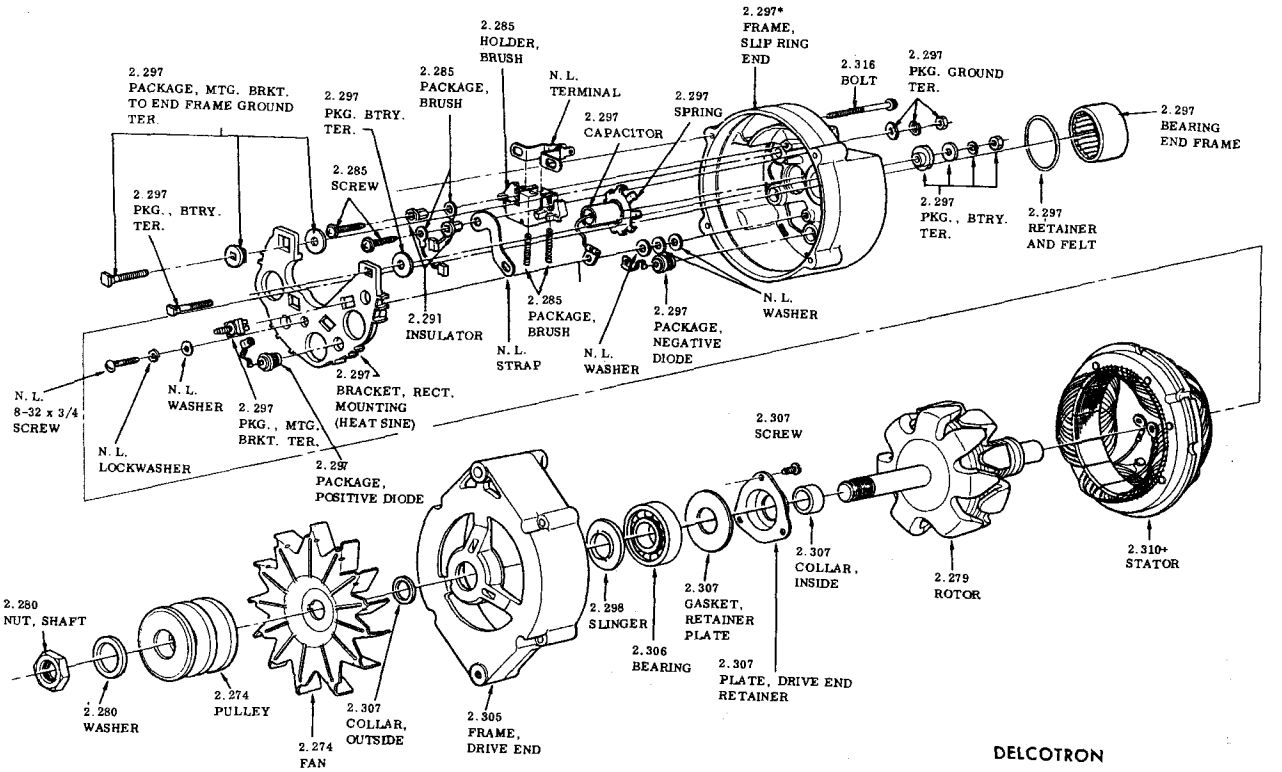
2.297
PACKAGE, MTG. BRKT.
TO END FRAME GROUND
TER.
2.297
PKG. BTRY.
TER.
2.285
PACKAGE,
BRUSH
2.285
HOLDER,
BRUSH
N. L.
TERMINAL
2.297
CAPACITOR
2.297
SPRING
2.297*
FRAME,
SLIP RING
END
2.316
BOLT
2.297
PKG. GROUND
TER.
2.297
BEARING
END FRAME
2.285
SCREW
2.297
PKG., BTRY.
TER.
2.297
PKG., BTRY.
TER.
2.297
RETAINER
AND FELT
2.291
INSULATOR
2.285
PACKAGE,
BRUSH
N. L.
STRAP
N. L.
WASHER
2.297
PACKAGE,
NEGATIVE
DIODE
N. L.
WASHER
2.297
BRACKET, RECT.
MOUNTING
(HEAT SINE)
N. L.
8-32 x 3/4
SCREW
N. L.
WASHER
2.297
PKG., MTG.
BRKT. TER.
N. L.
LOCKWASHER
2.297
PACKAGE,
POSITIVE DIODE
2.307
SCREW
2.307
COLLAR,
INSIDE
2.279
ROTOR
2.310+
STATOR
2.280
NUT, SHAFT
2.280
WASHER
2.274
PULLEY
2.274
FAN
2.307
COLLAR,
OUTSIDE
2.305
FRAME,
DRIVE END
2.298
SLINGER
2.306
BEARING
2.307
GASKET,
RETAINER
PLATE
2.307
PLATE, DRIVE END
RETAINER
DELCOTRON

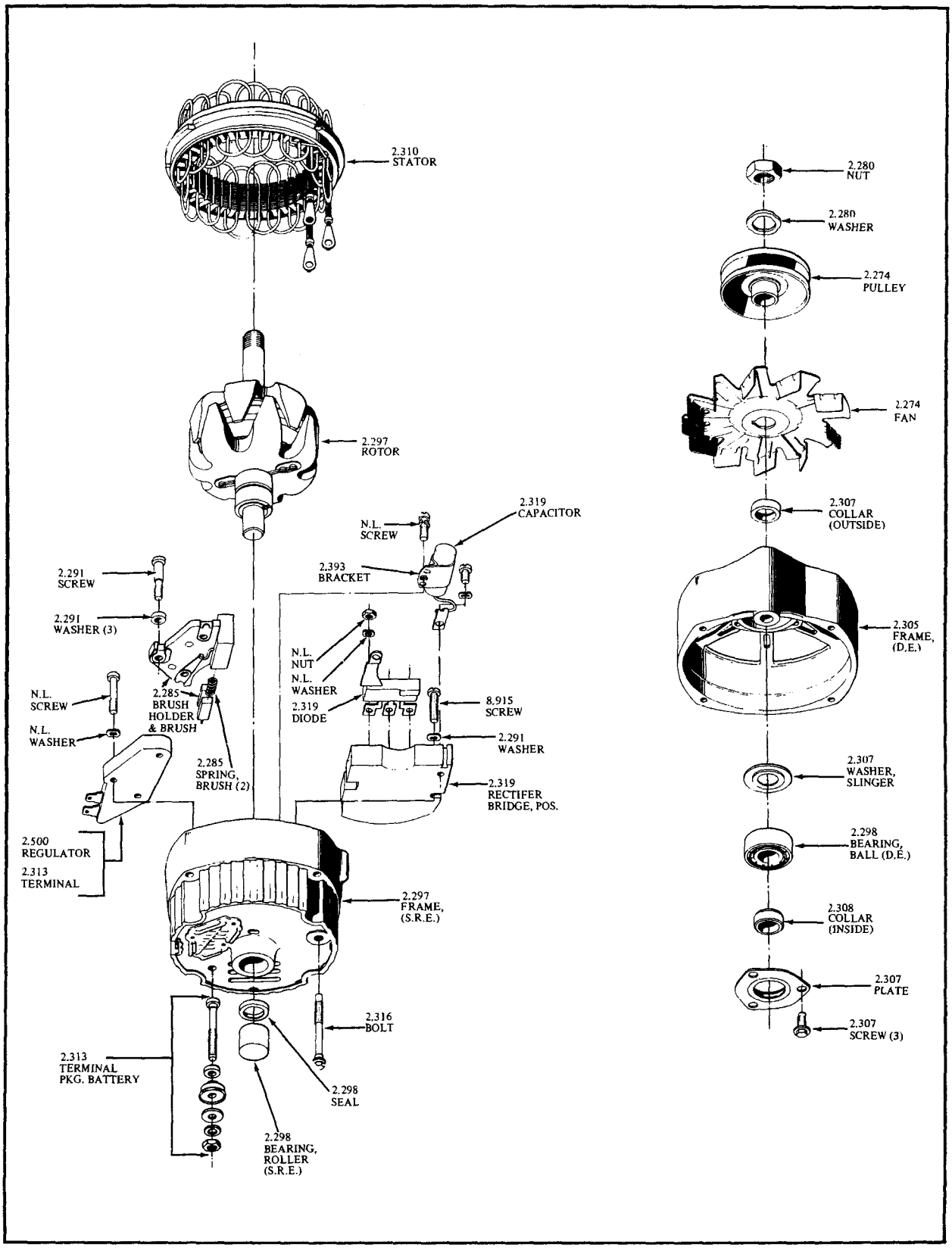

TYPICAL DELCOTRON
(WITH REGULATOR)
1972-1973

MEMORANDA

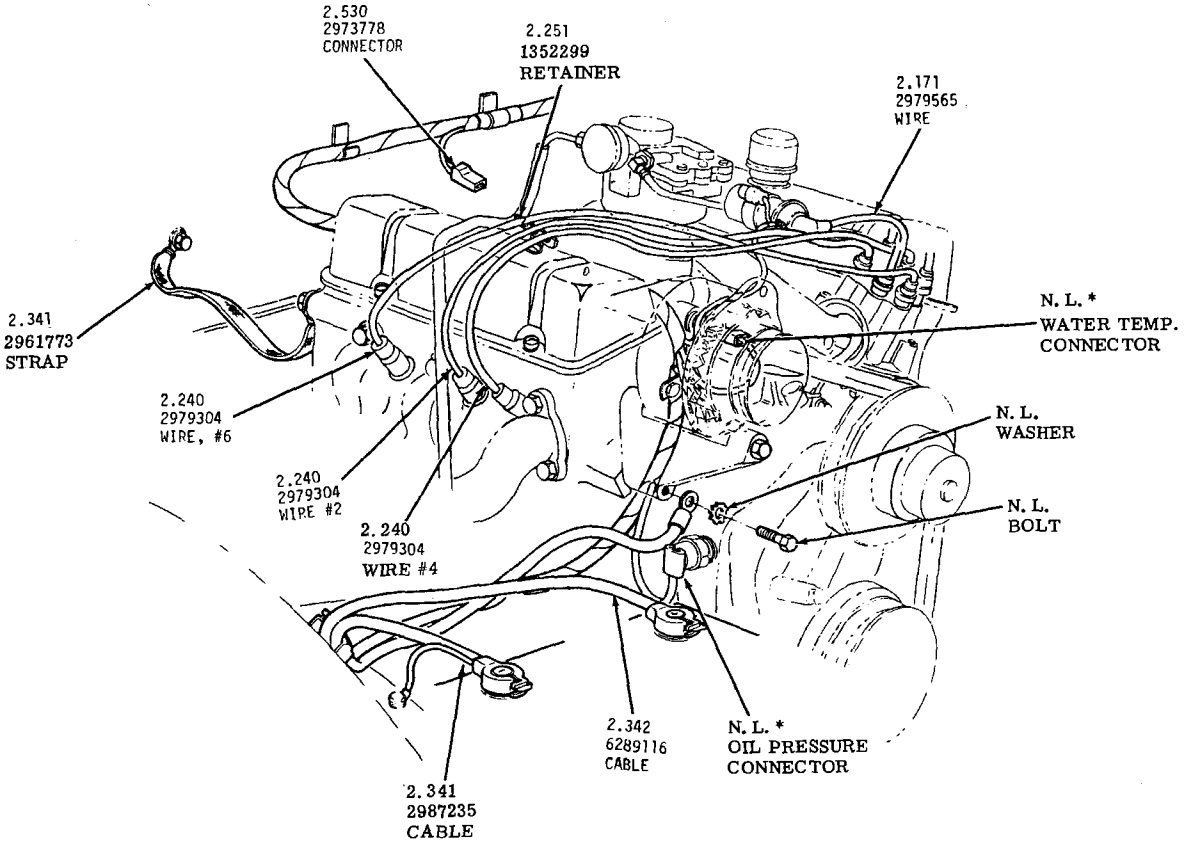

* ALSO PART OF
2.480 - 2989424
WIRING

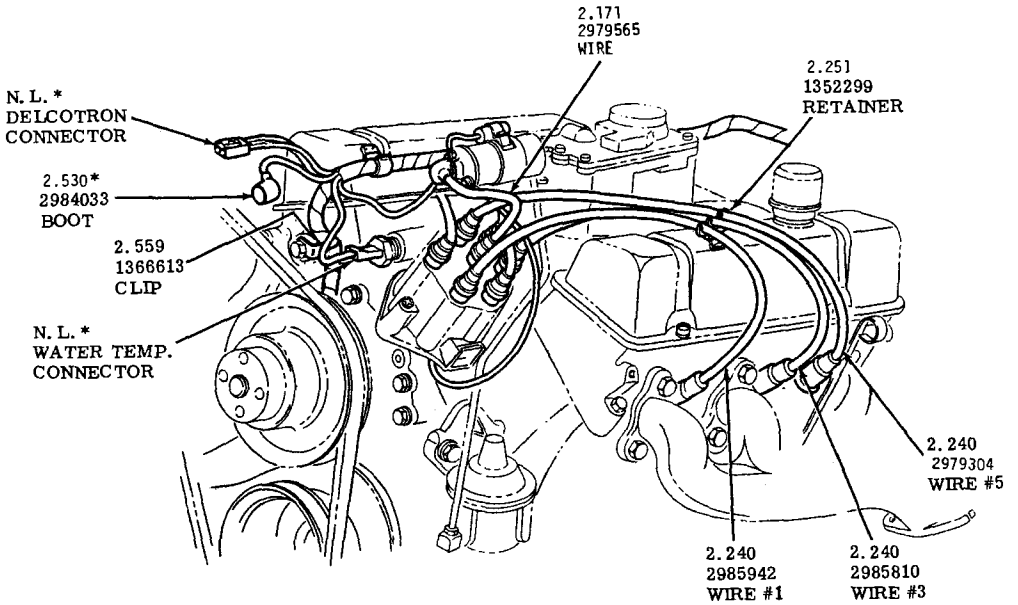

1965 V-6 ENGINE COMPARTMENT WIRING RT. SIDE

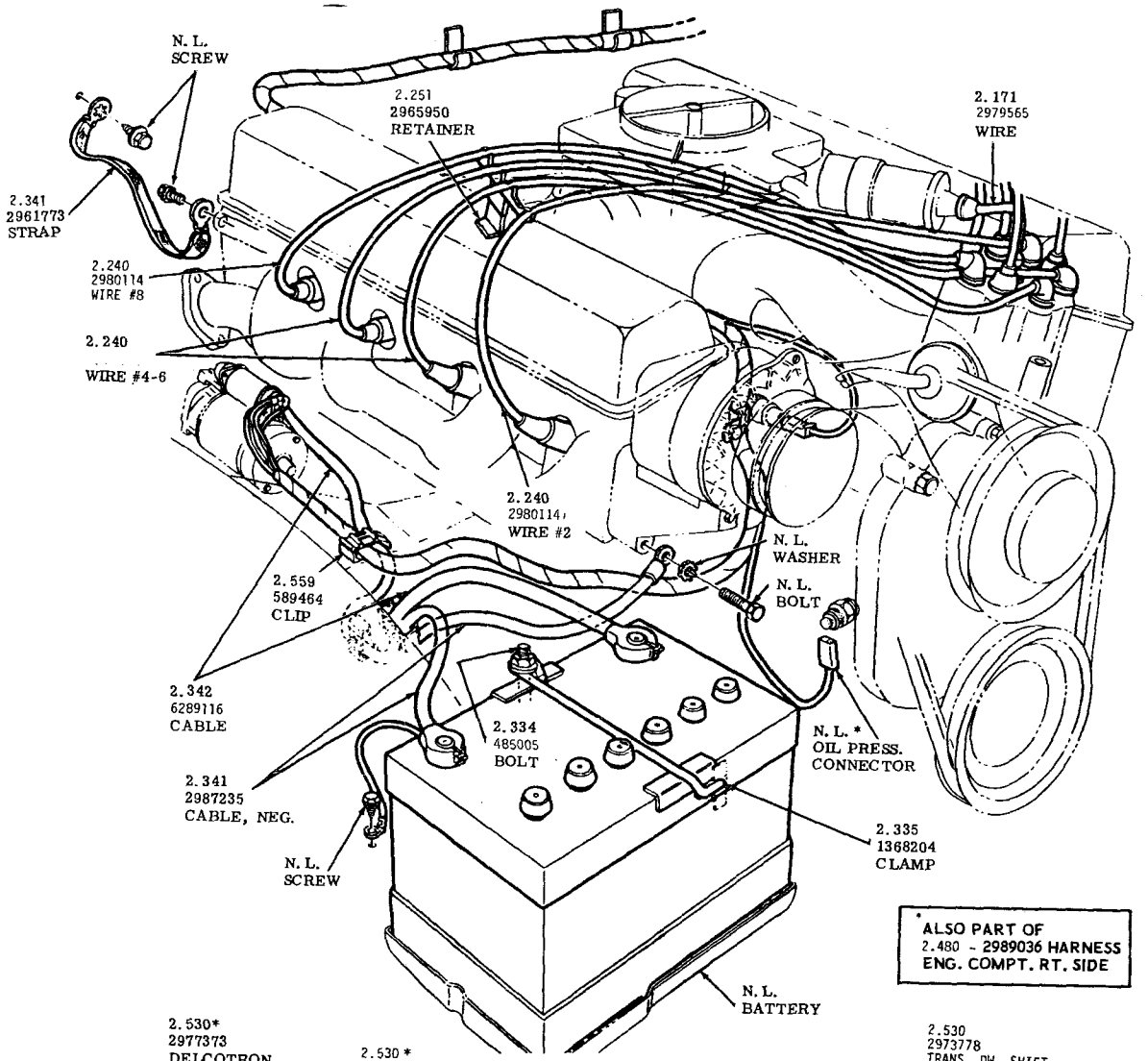

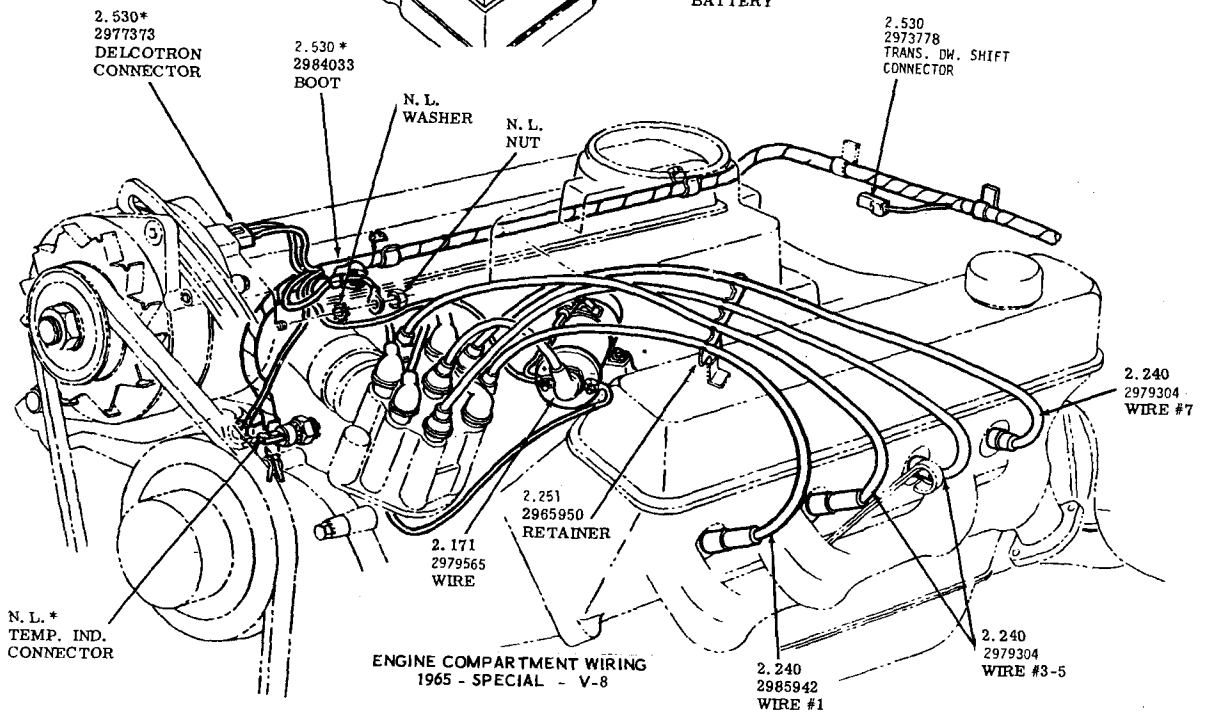

ENGINE COMPARTMENT WIRING
1965 - SPECIAL - V-8

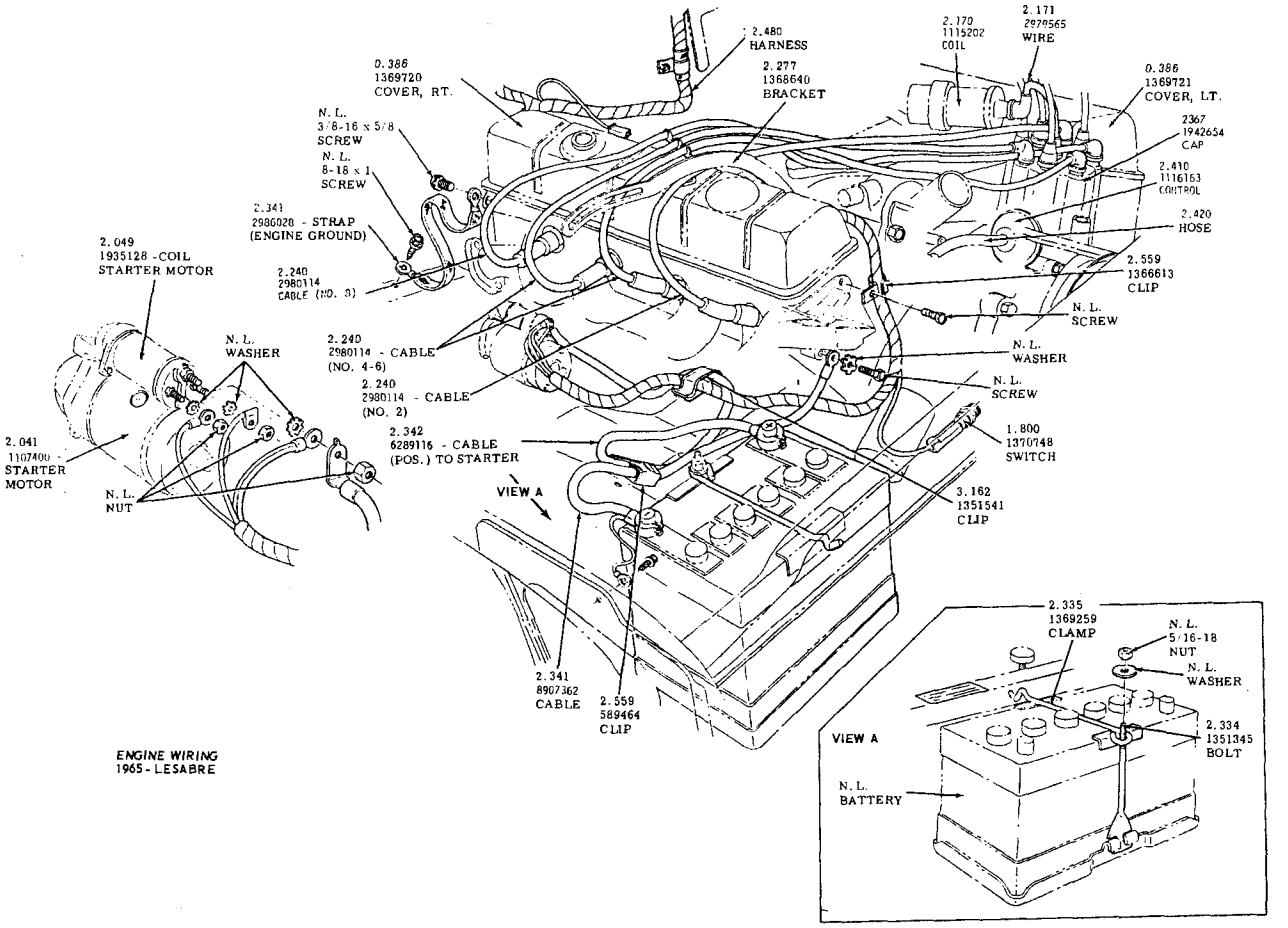

ENGINE WIRING
1965 - LESABRE

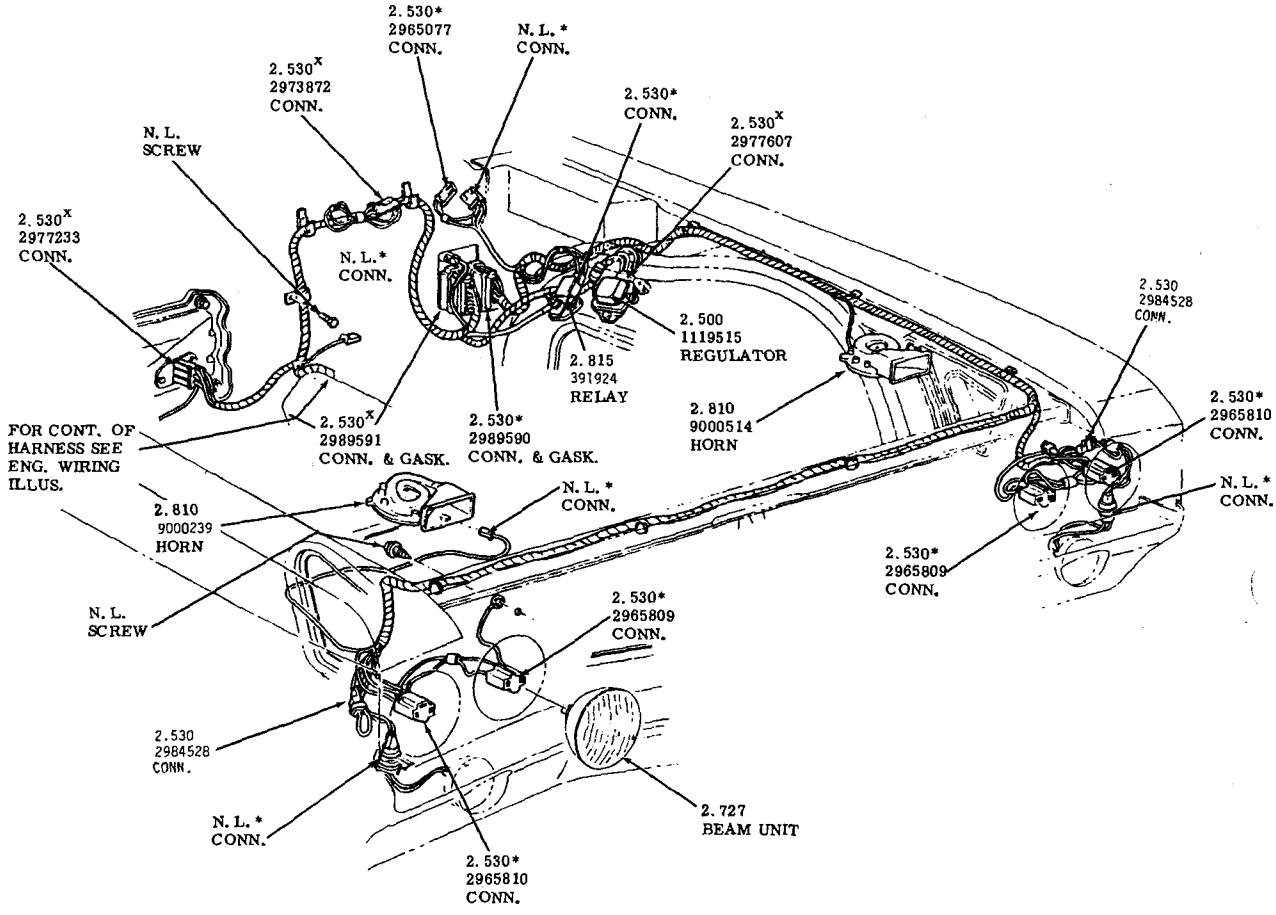

*ALSO PART OF 2.480 - HARNESS ENG. COMPT. WIRING - LEFT
XALSO PART OF 2.480 - HARNESS ENG. COMPT. WIRING - RIGHT

ENGINE COMPARTMENT WIRING
1965 - LESABRE - WILDCAT - ELECTRA 225

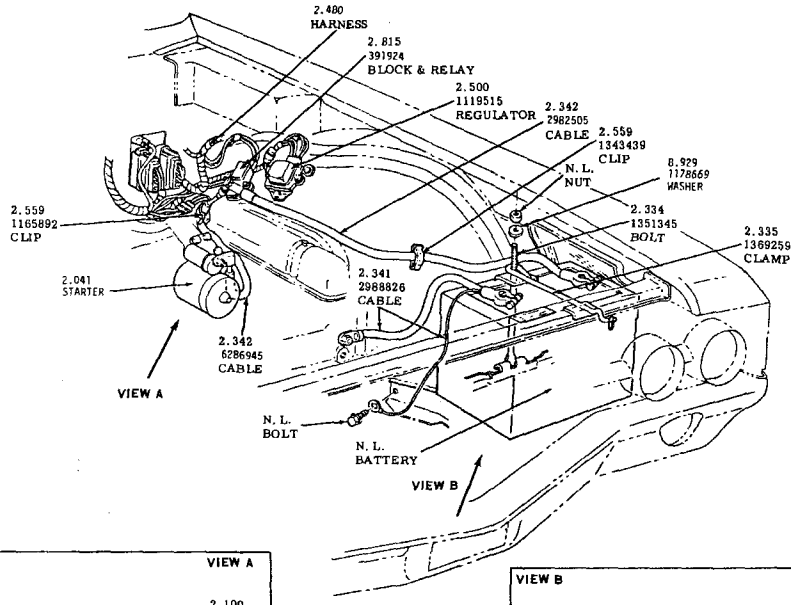

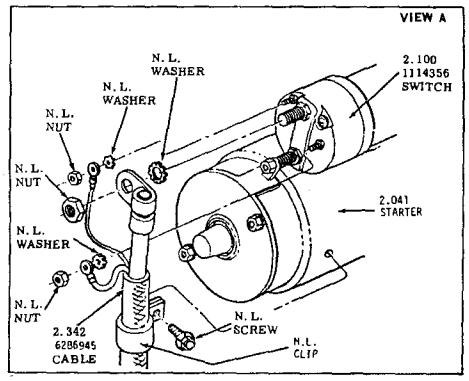

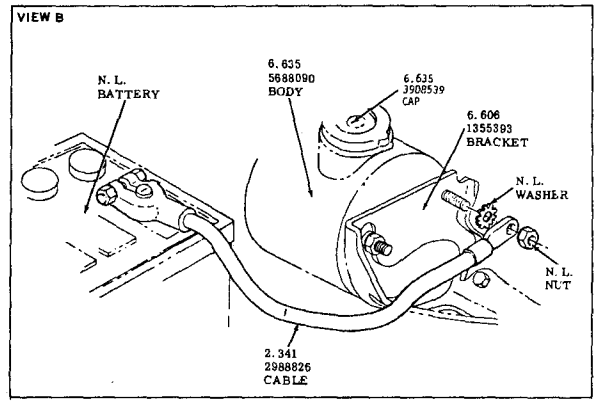

ENGINE WIRING
1965 - WILDCAT-ELECTRA

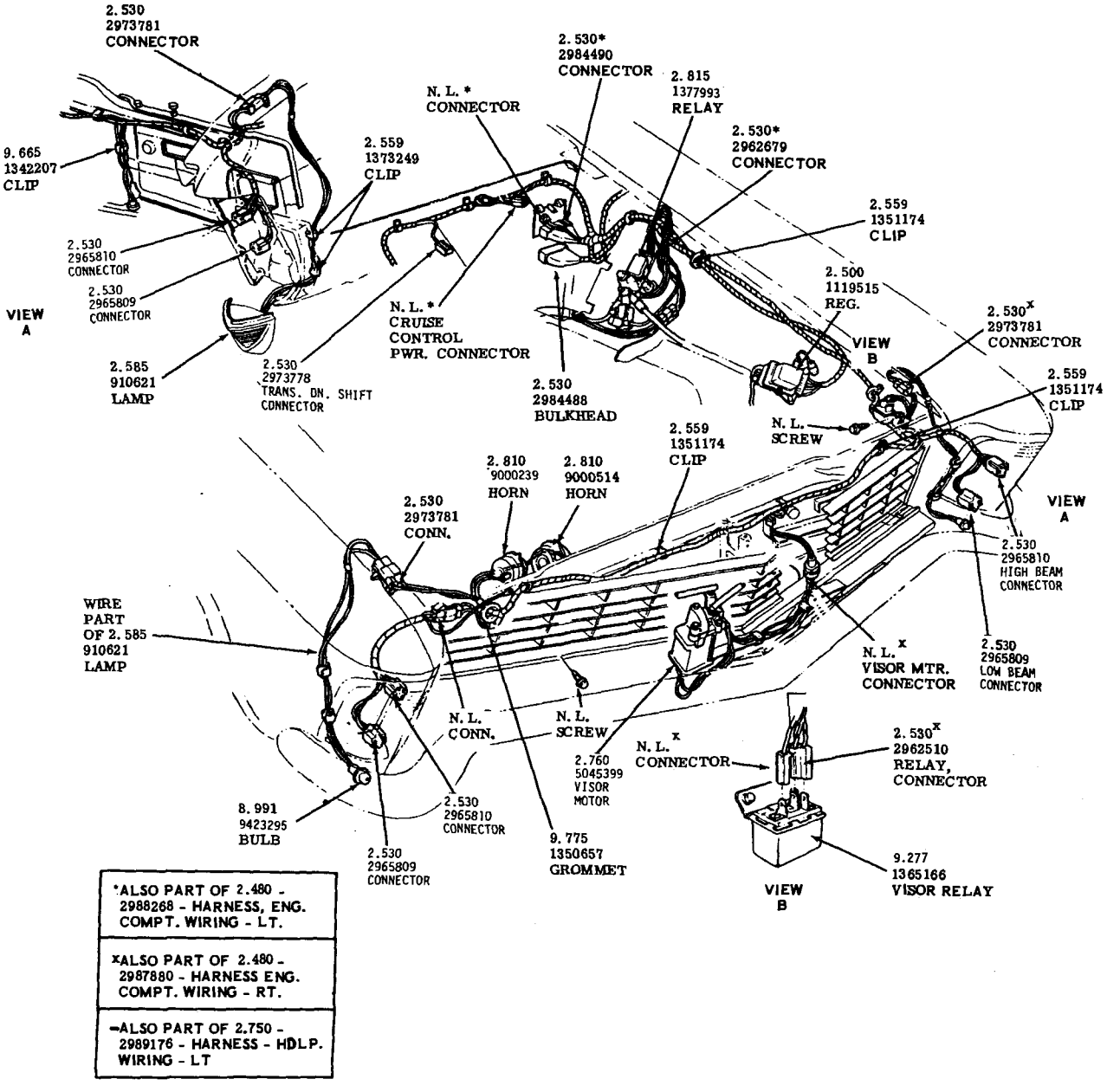

*ALSO PART OF 2.480 - 2988268 - HARNESS, ENG. COMPT. WIRING - LT.

xALSO PART OF 2.480 - 2987880 - HARNESS ENG. COMPT. WIRING - RT.

-ALSO PART OF 2.750 - 2989176 - HARNESS - HDLP. WIRING - LT

1965 RIVIERA ENGINE COMPARTMENT WIRING HARNESS

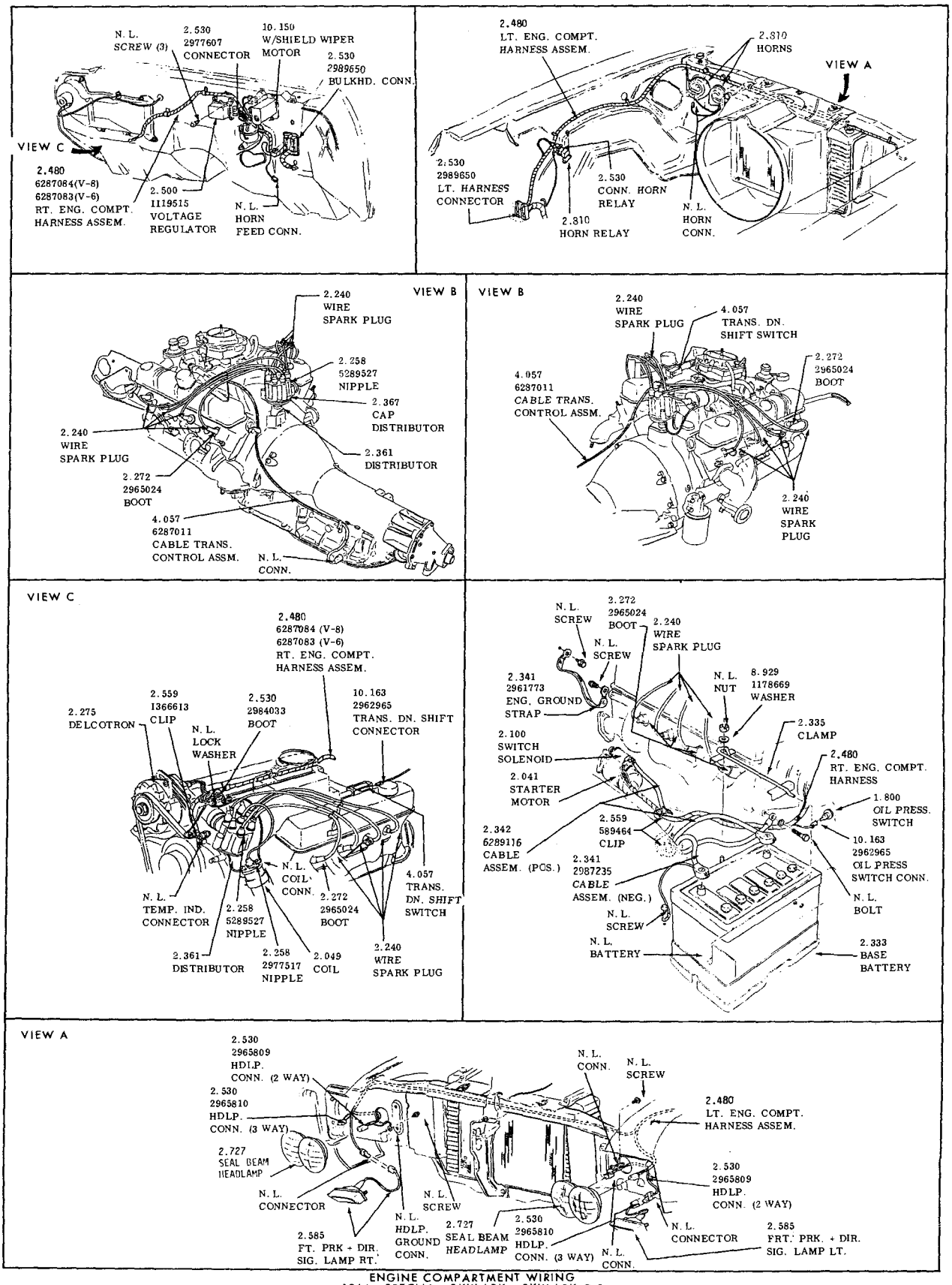

ENGINE COMPARTMENT WIRING
1966 - SPECIAL - SKYLARK - SKYLARK G.S.

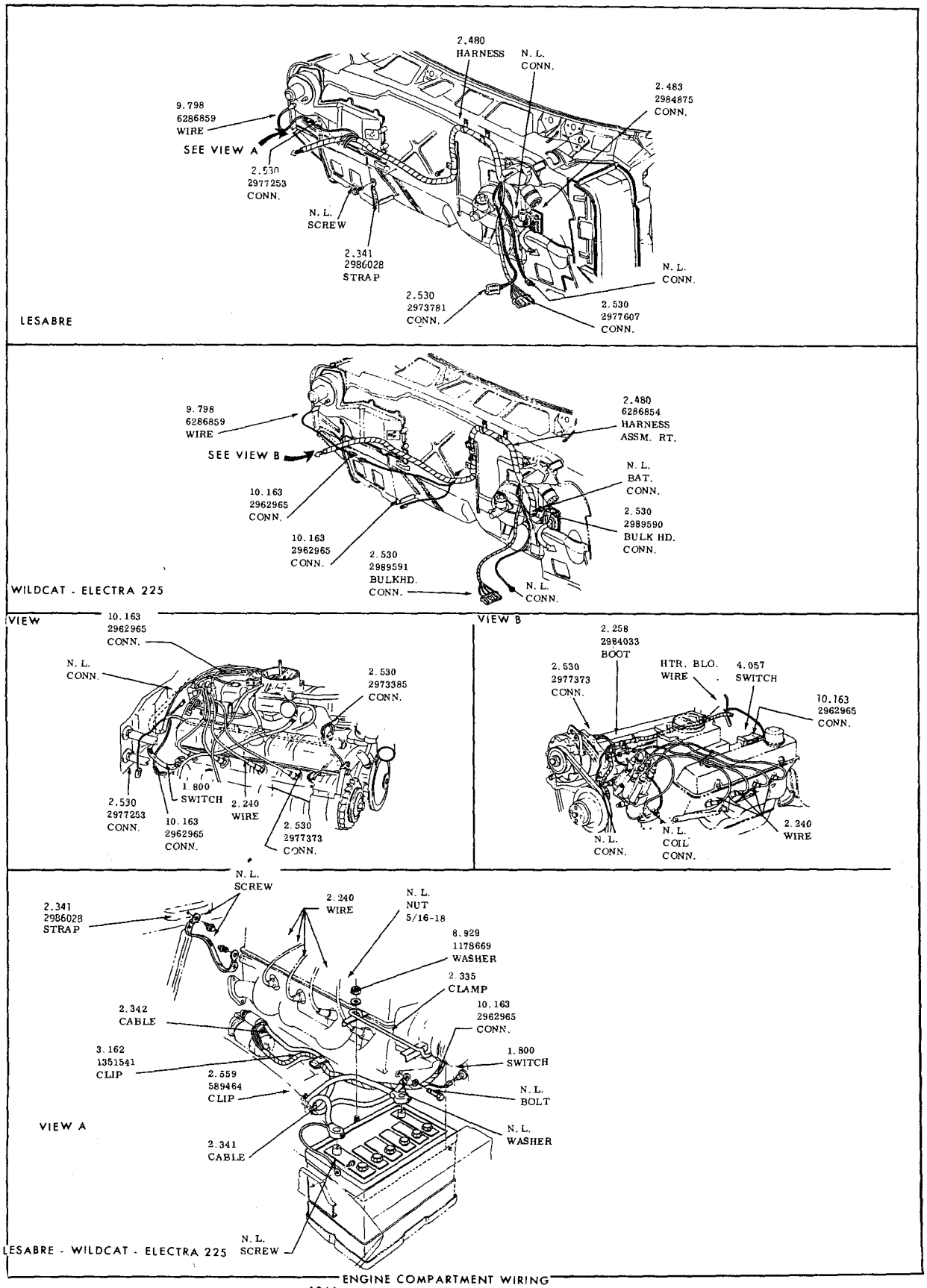

ENGINE COMPARTMENT WIRING
1966 - LESABRE - WILDCAT - ELECTRA 225

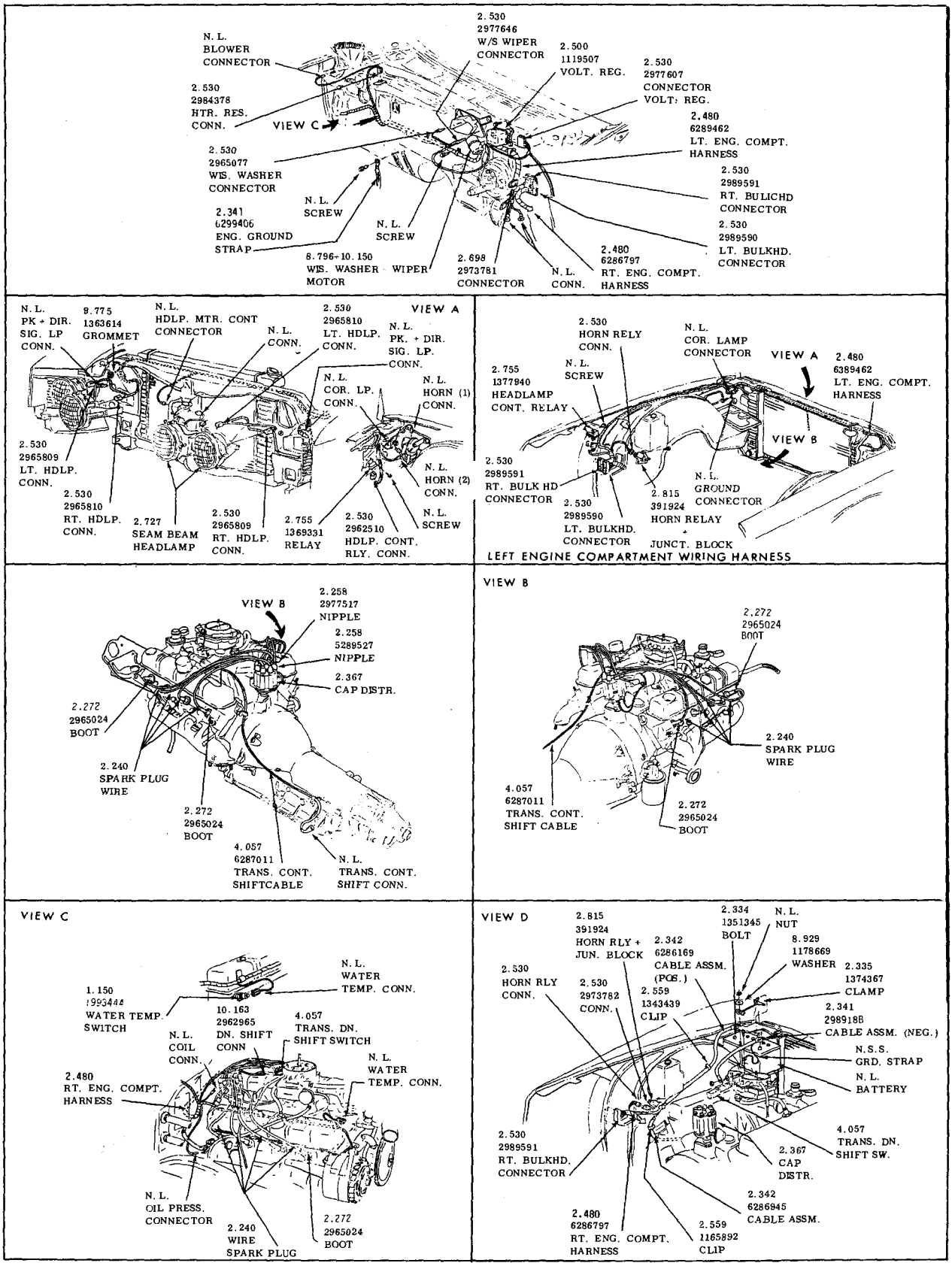

ENGINECOMPARTMENT WIRING HARNESS
1966 - RIVIERA

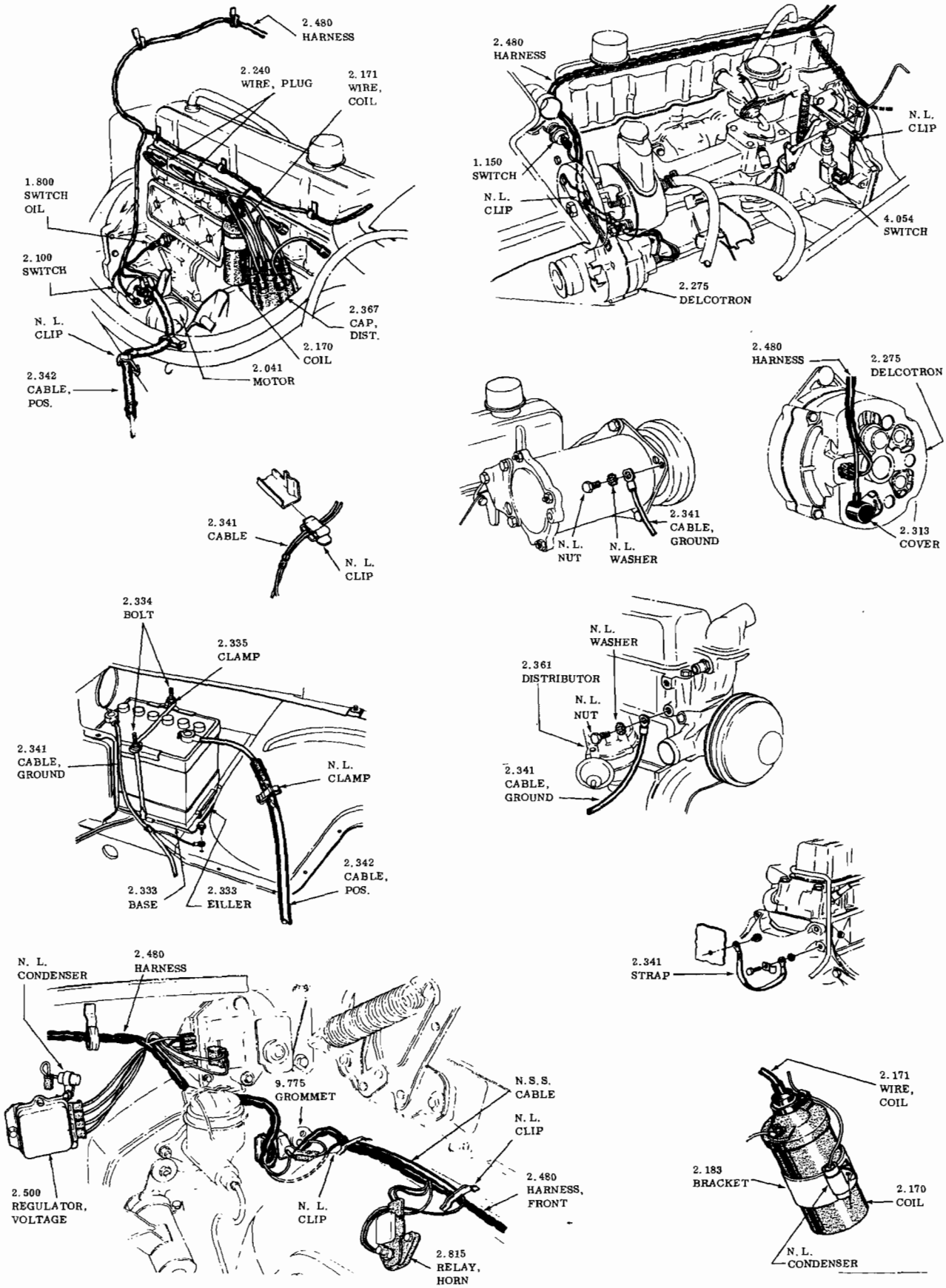

ENGINE COMPARTMENT WIRING
1968-1971 L-6-250 - CU. IN. ENGINE

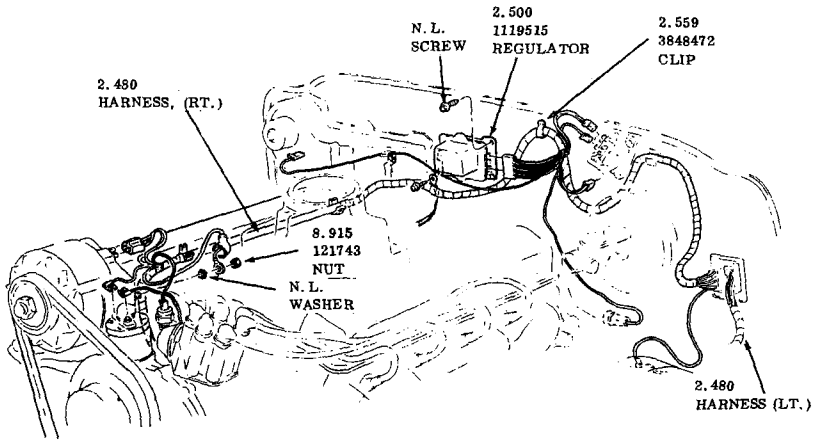

30-4000

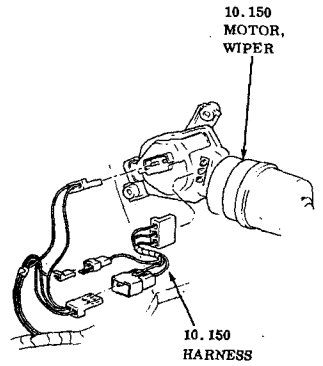

30-4000

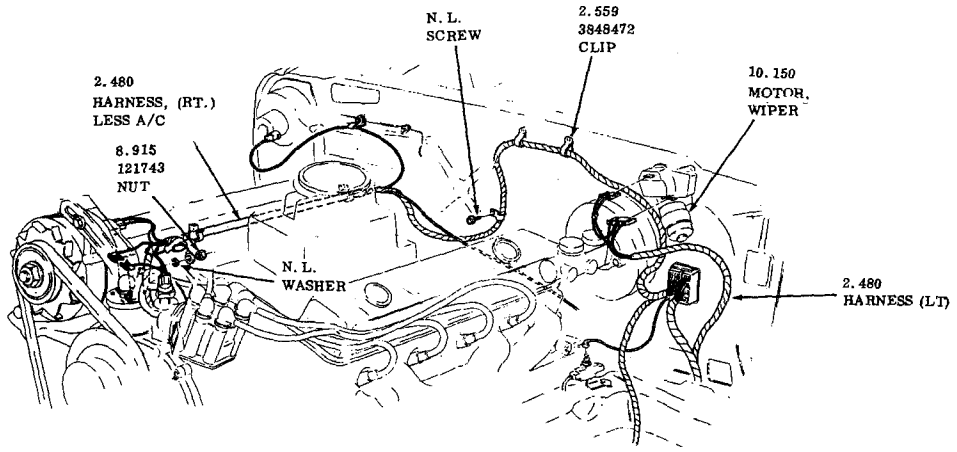

50-60-8000

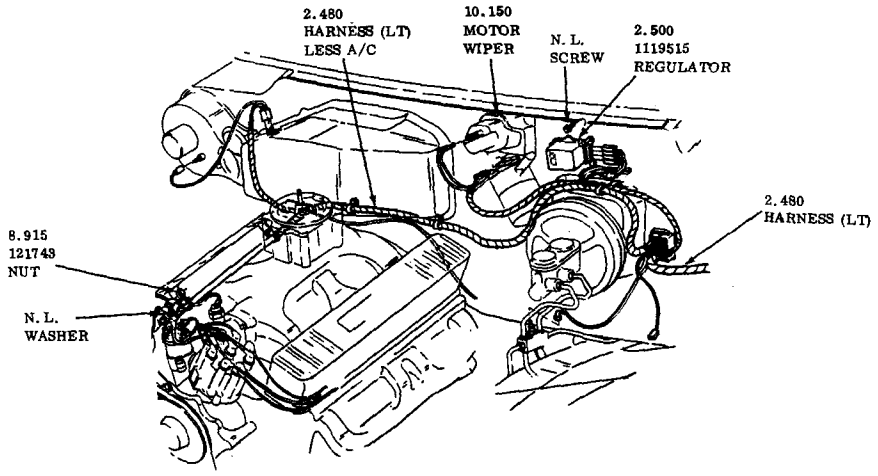

9000

ENGINE COMPARTMENT WIRING
1968-1970-ALL

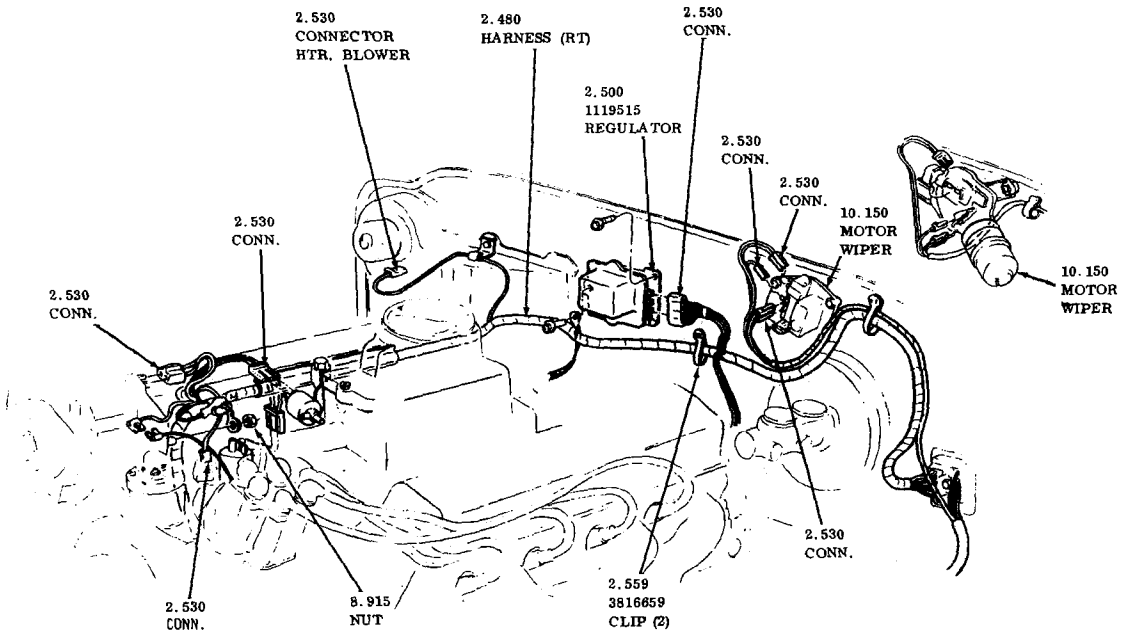

ENGINE WIRING

1971-1972 30-4000

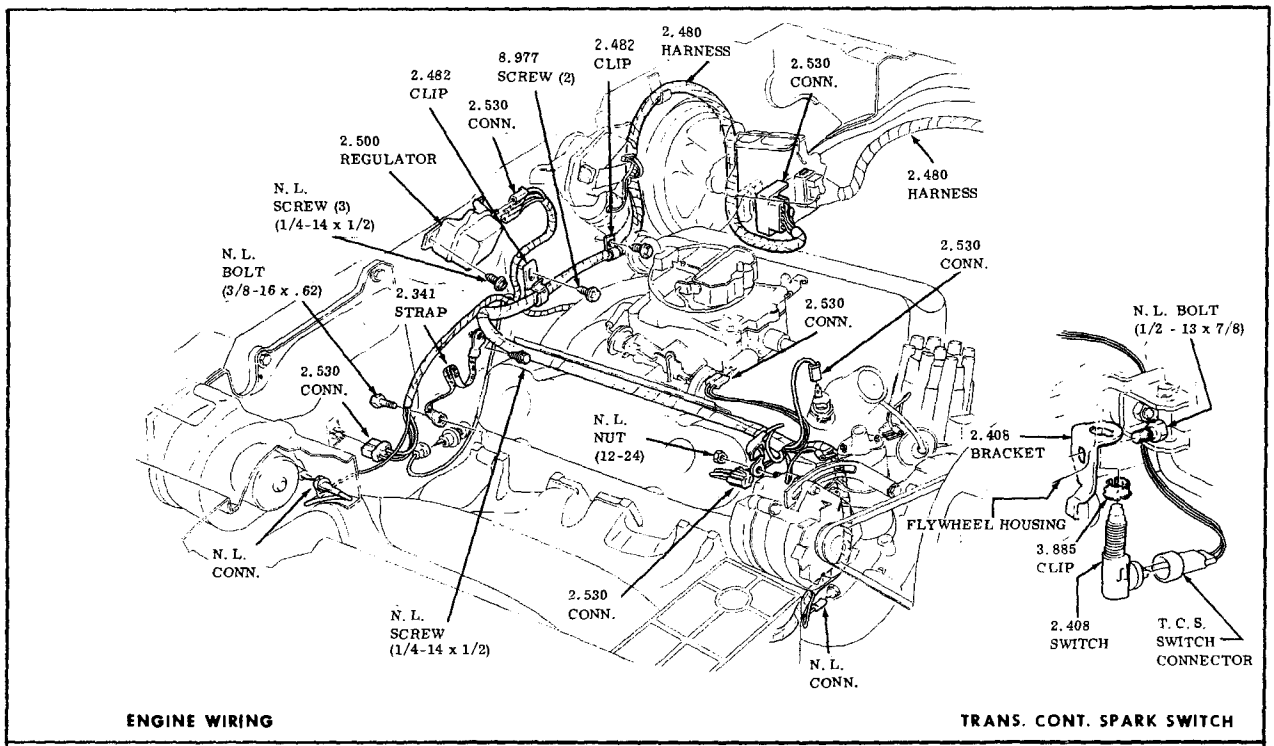

ENGINE WIRING **TRANS. CONT. SPARK SWITCH**

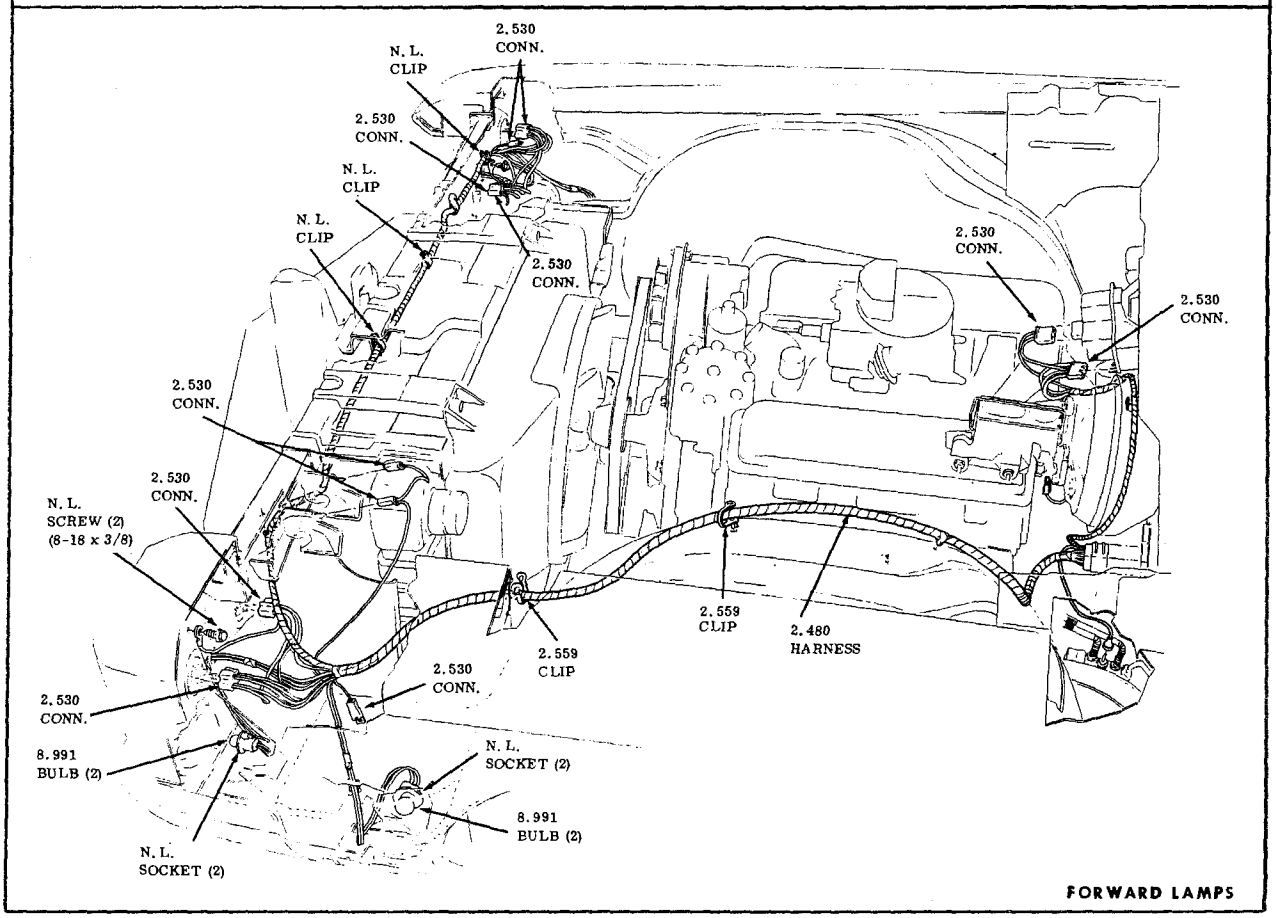

FORWARD LAMPS

ENGINE COMPARTMENT WIRING

1971-1972 50-60-8000

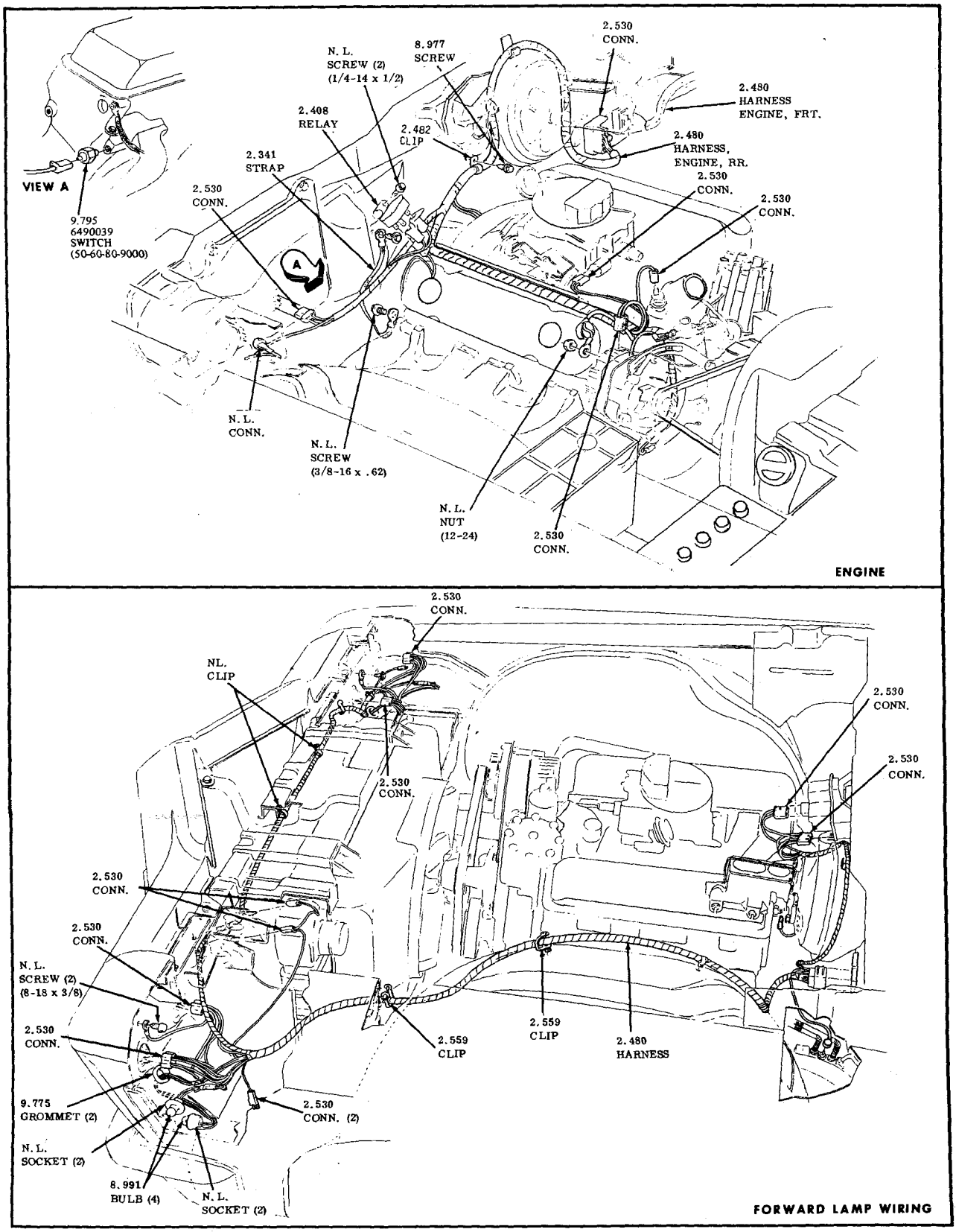

ENGINE COMPARTMENT WIRING

1971-1972 9000

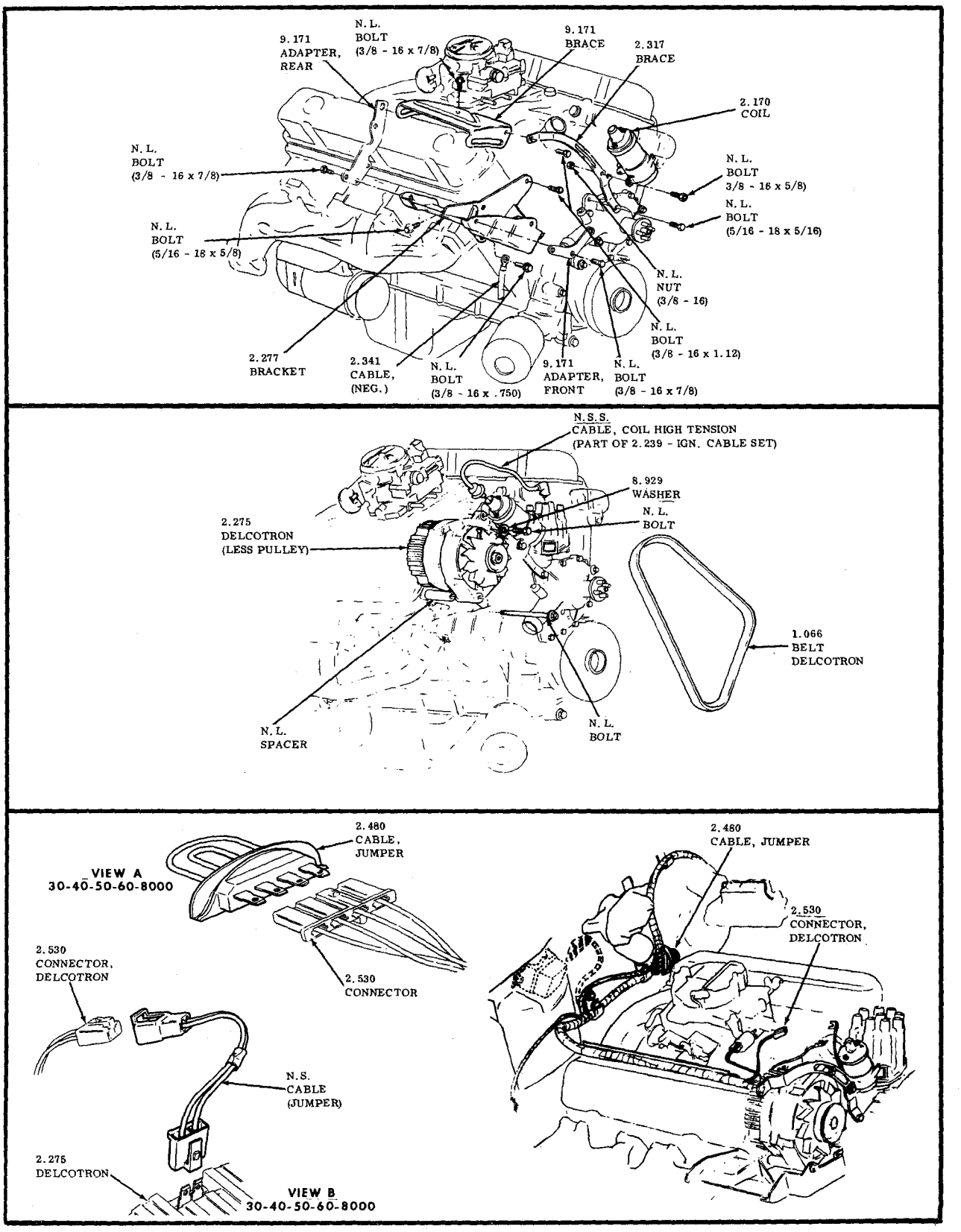

HEAVY DUTY DELCOTRON

(80 AMPERE)

1971-1972 ALL

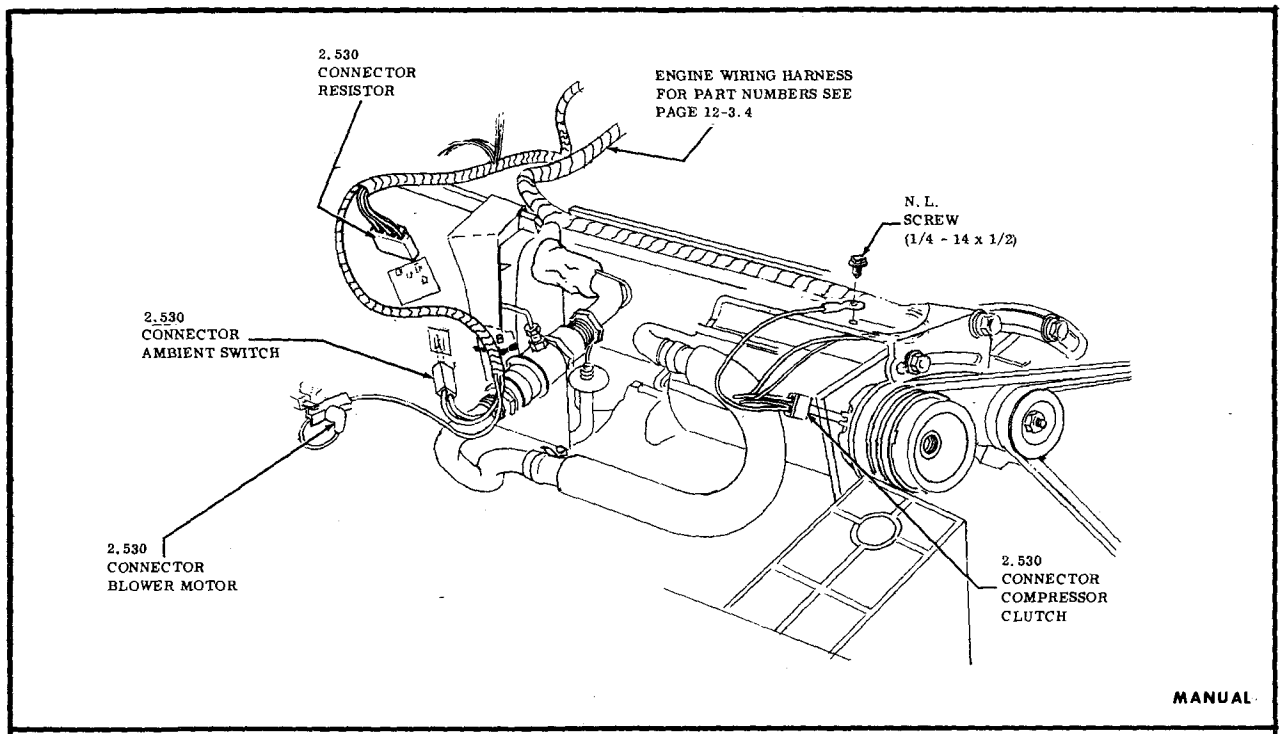

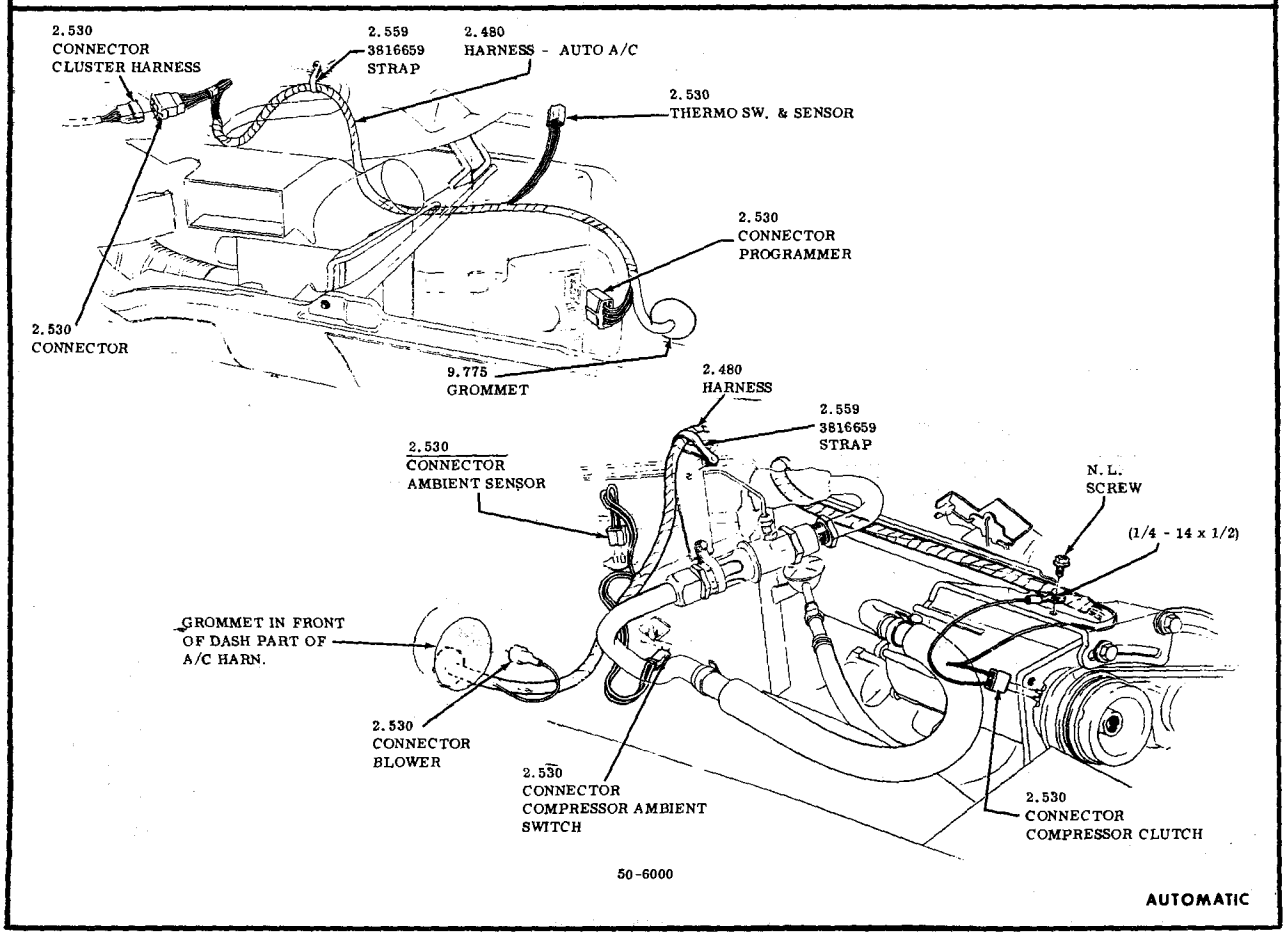

WIRING - ENGINE COMPARTMENT

AIR CONDITIONING

1971-1972 50-60-80-9000

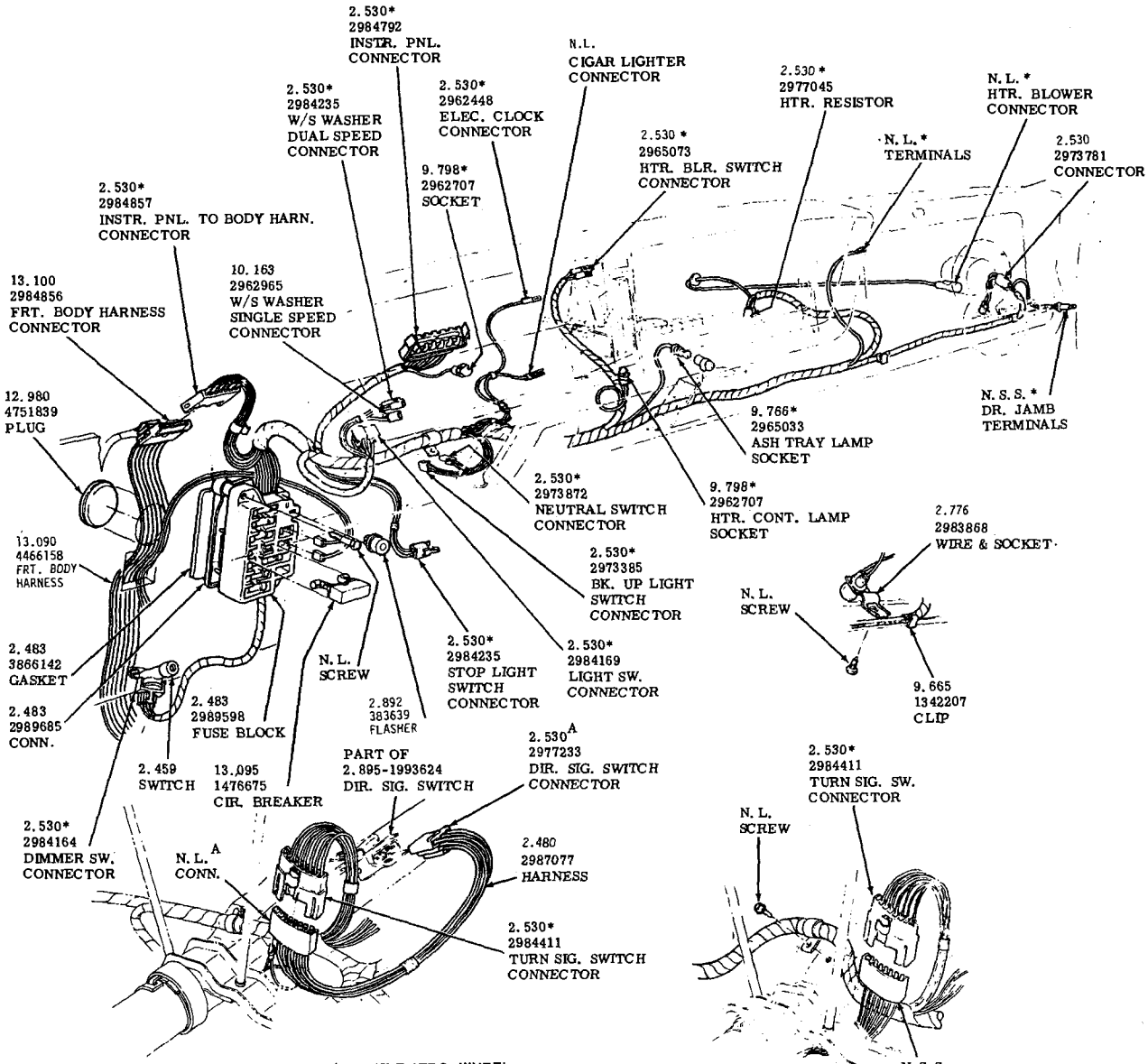

1965 SPECIAL TILT TYPE STRG. WHEEL

1965 SPECIAL REG. TYPE STRG. WHEEL

*ALSO PART OF 2.480 - 2989384 HARNESS INSTR. PNL. WIRING
A ALSO PART OF 2.480 - 2987077 HARNESS INSTR. PNL. JPR. TO TURN SIG. SWITCH

1965 SPECIAL INSTRUMENT PANEL WIRING HARNESS

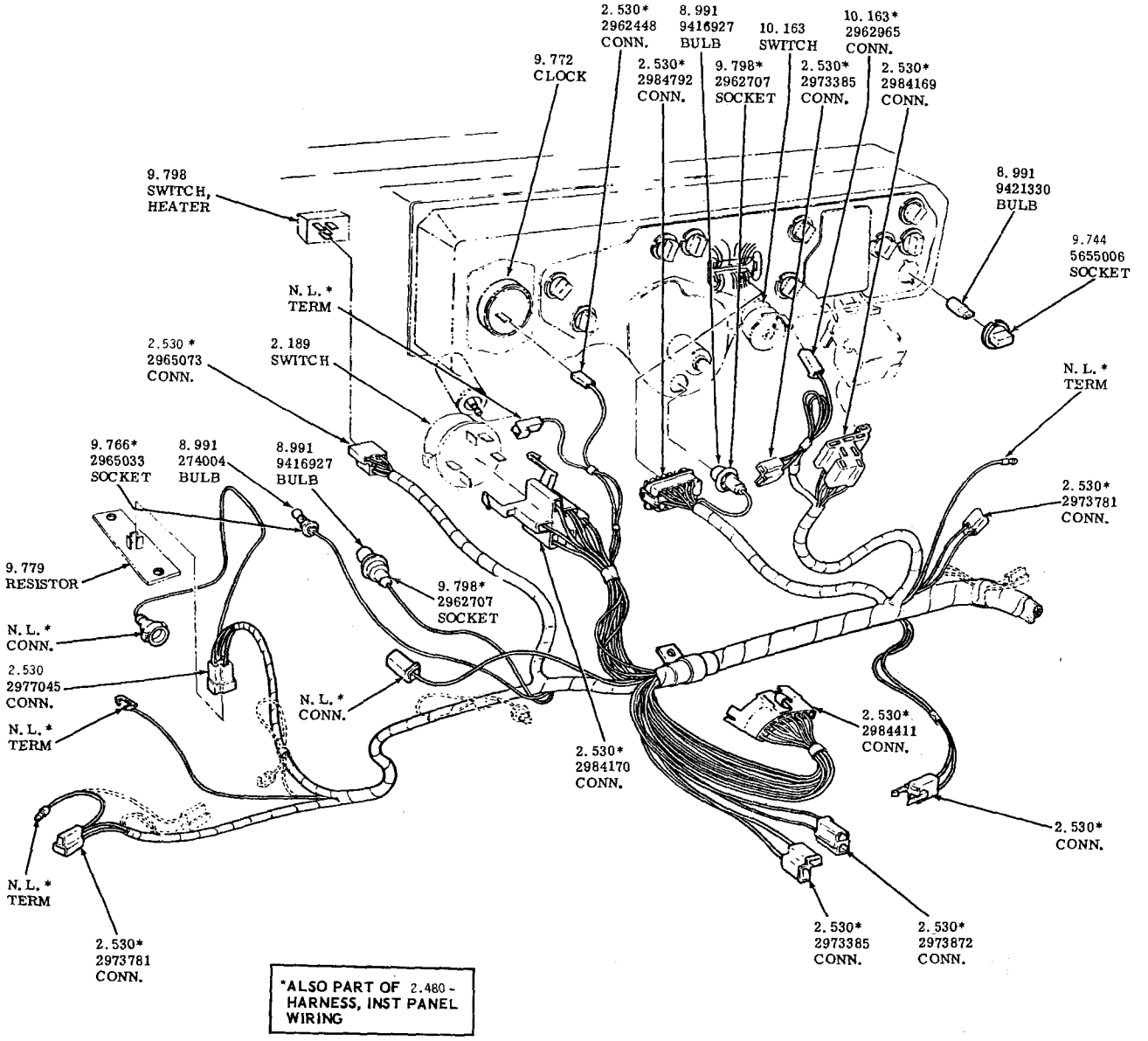

INSTRUMENT PANEL WIRING
1965 - SPECIAL - SKYLARK

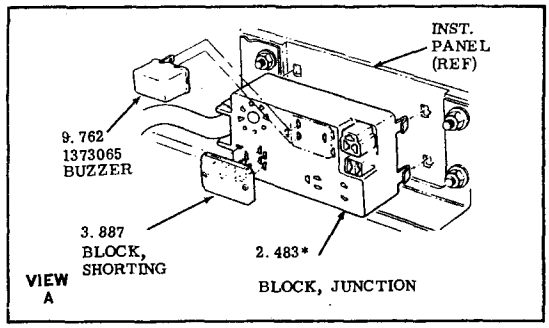

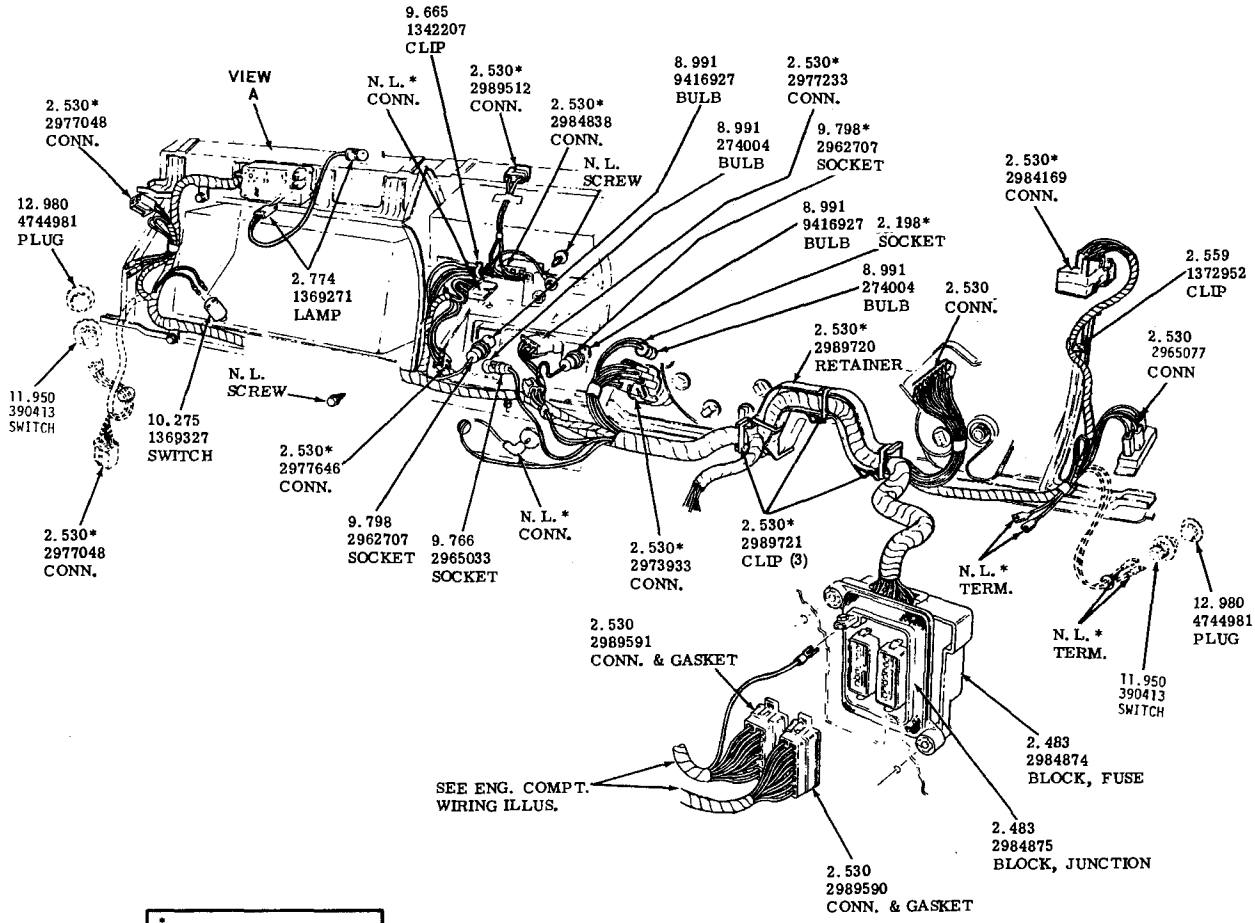

*ALSO PART OF 2.480 - HARNESS, INST. PANEL WIRING

INSTRUMENT PANEL WIRING
1965 - LESABRE - WILDCAT - ELECTRA 225

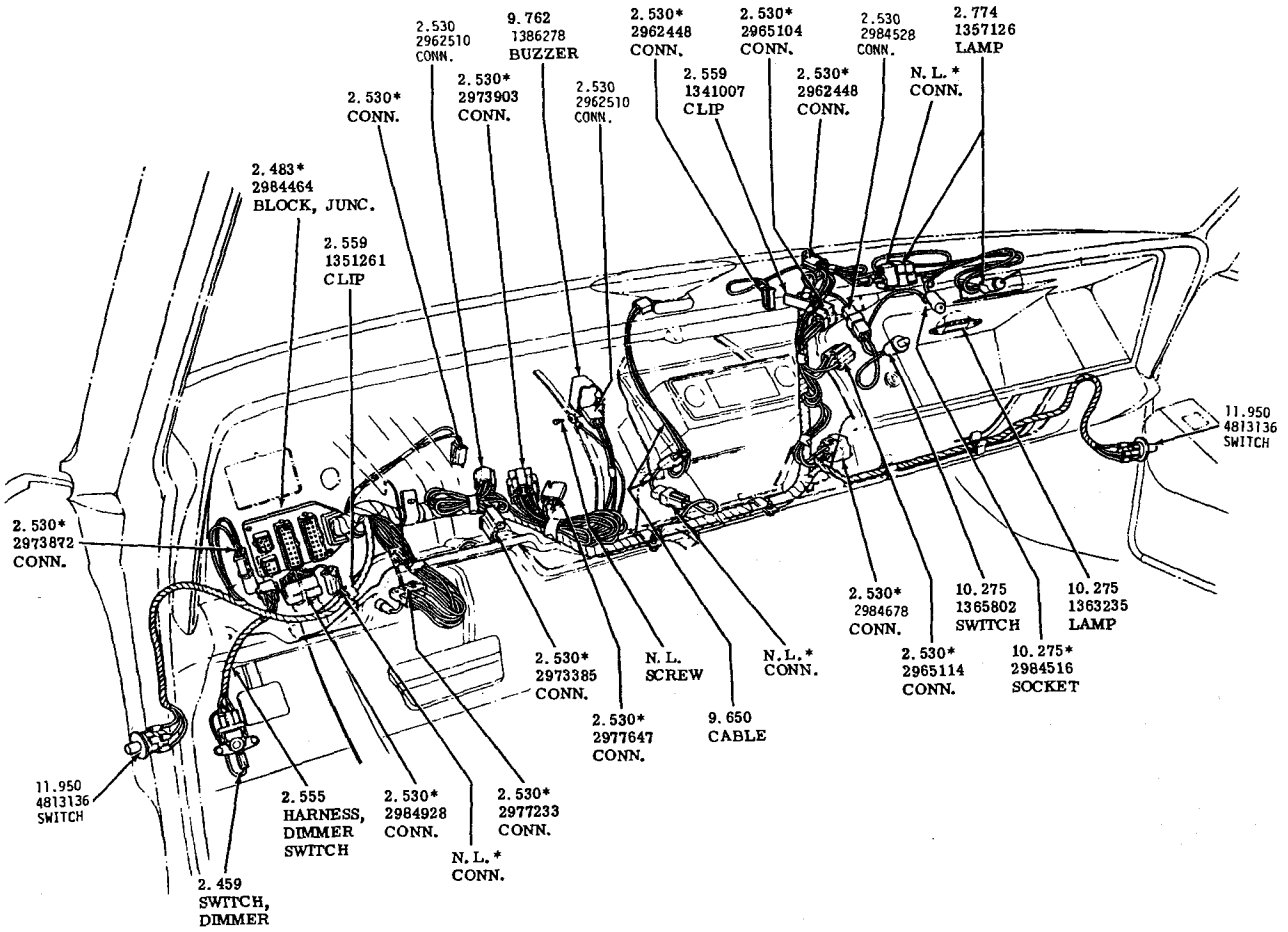

*ALSO INCLUDED IN 2.480 - HARNESS, INST. PANEL WIRING

INSTRUMENT PANEL
WIRING
1965 - RIVIERA

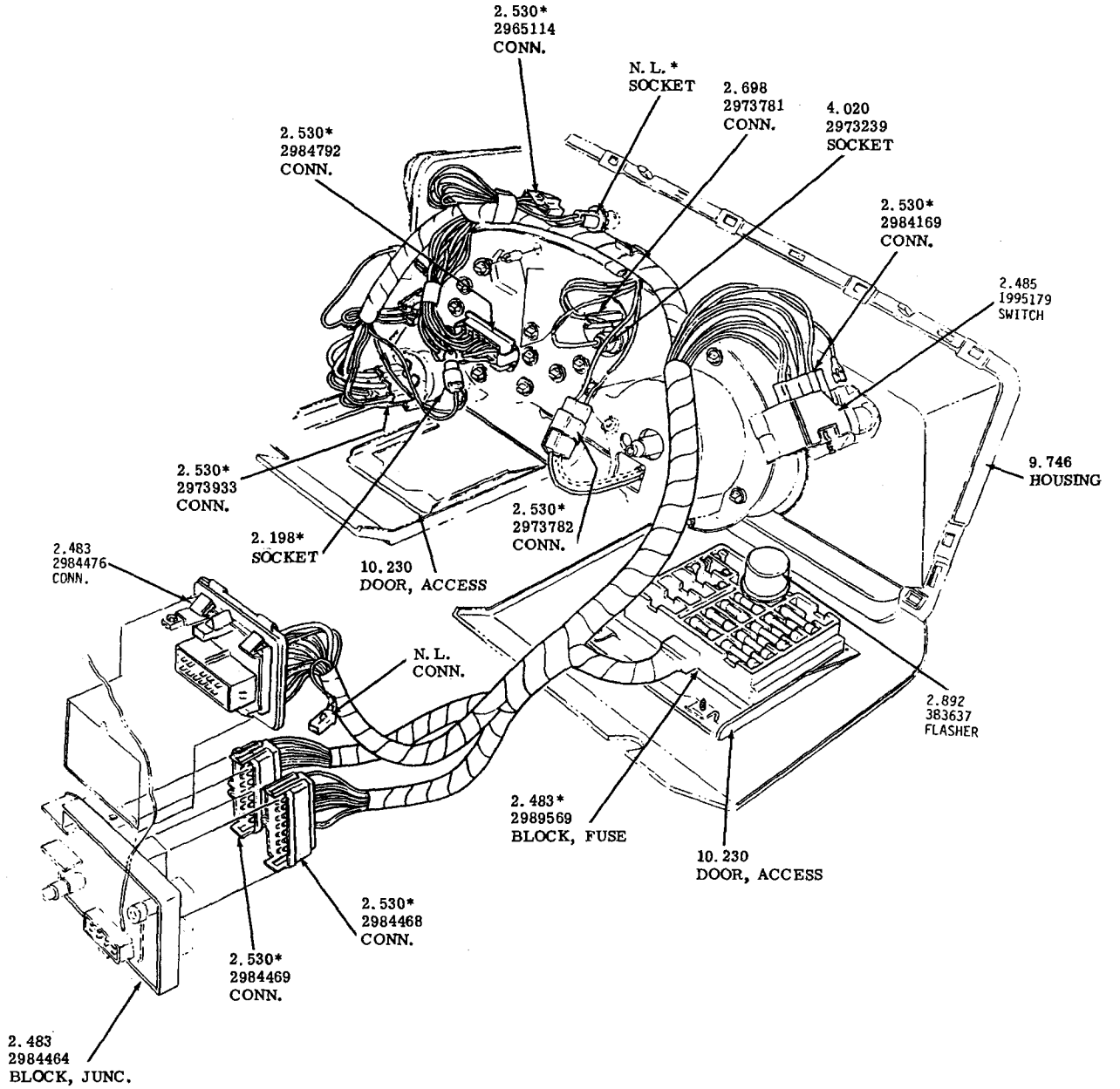

*ALSO PART OF 2.480 - HARNESS, INST. CLUSTER WIRING

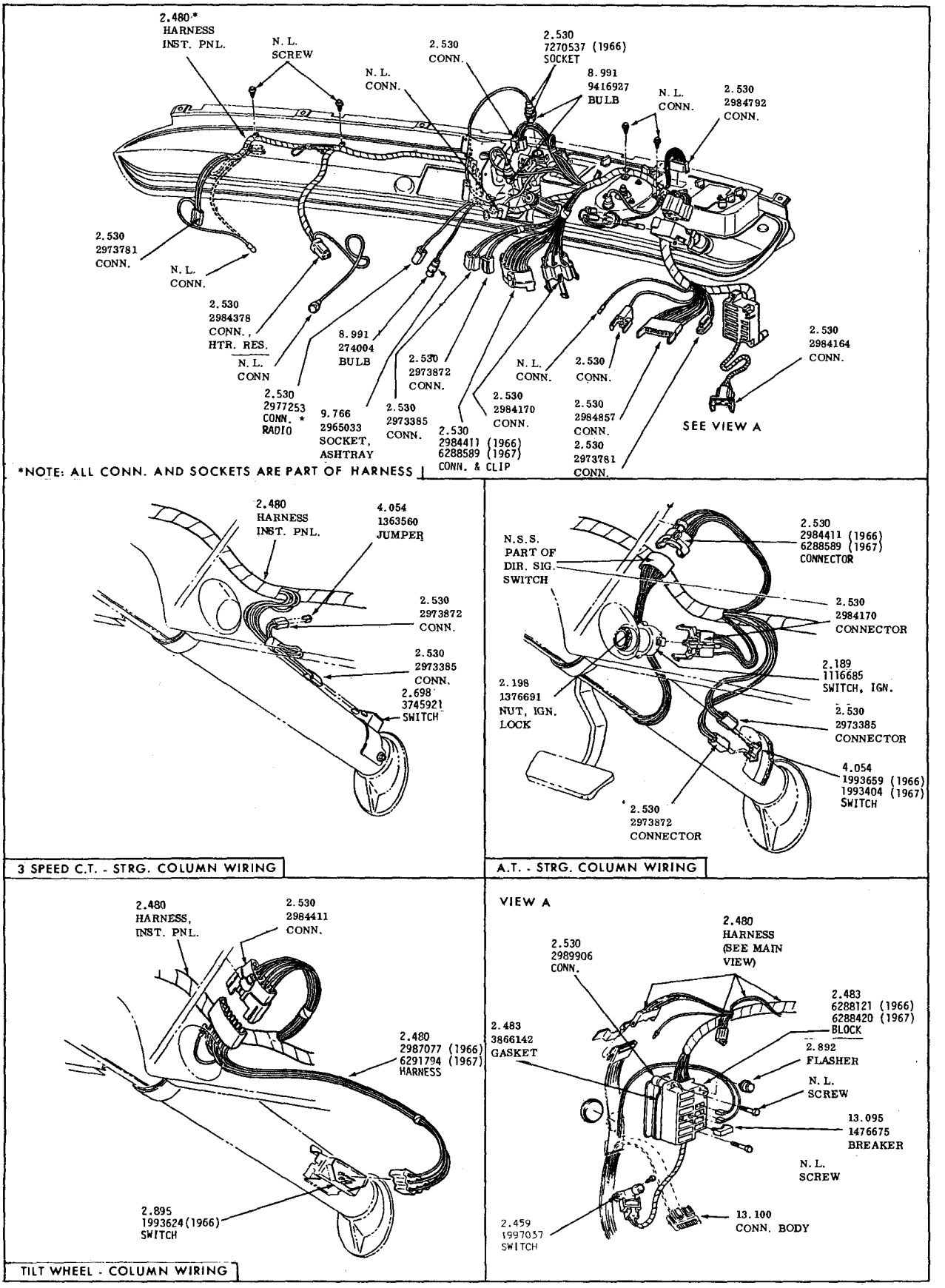

INSTRUMENT PANEL WIRING

1966-1967 - SPECIAL - SKYLARK - SKYLARK GRAN SPORT

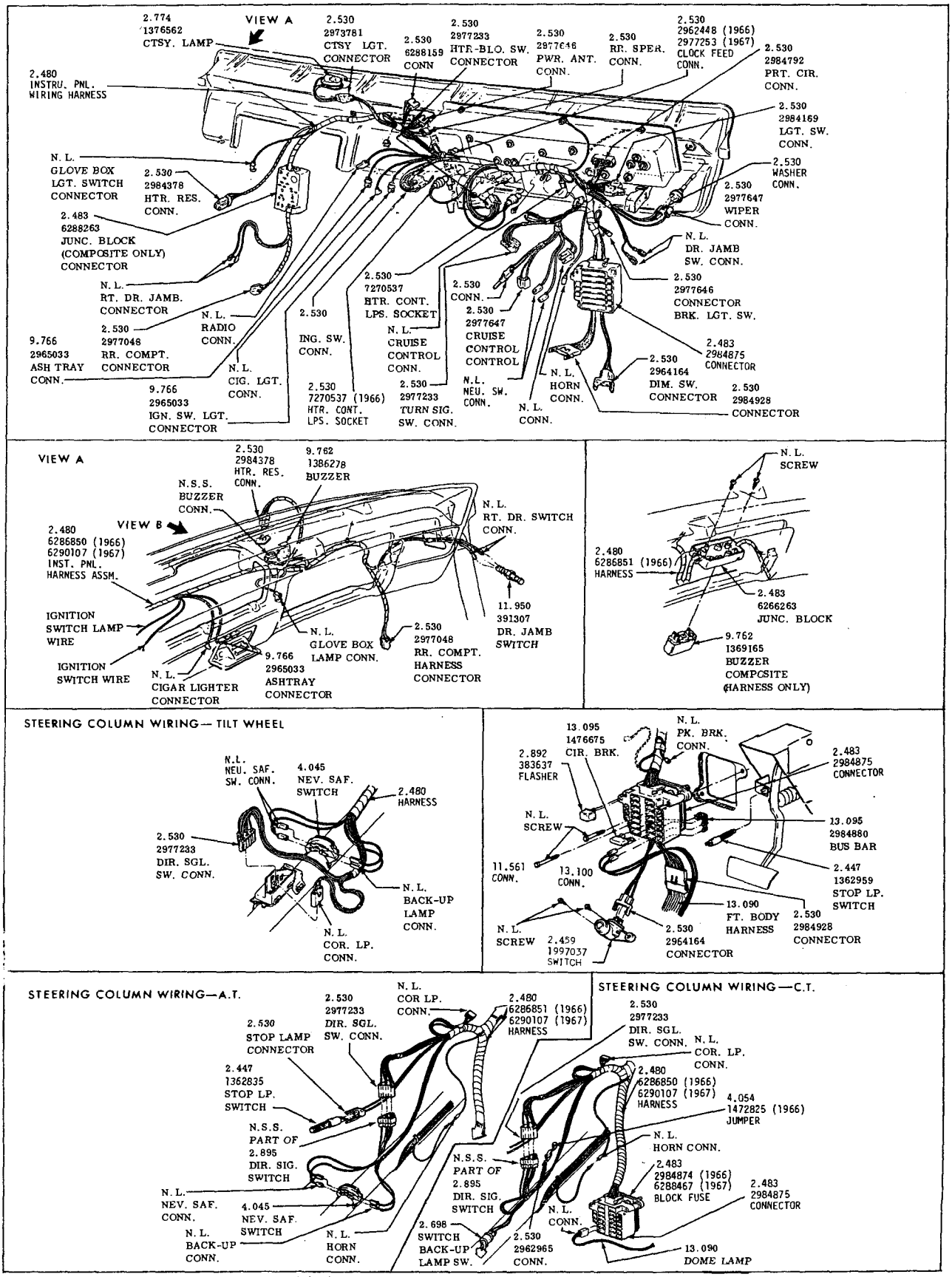

INSTRUMENT PANEL AND STEERING COLUMN WIRING
1966-1967 —LESABRE—WILDCAT—ELECTRA 225

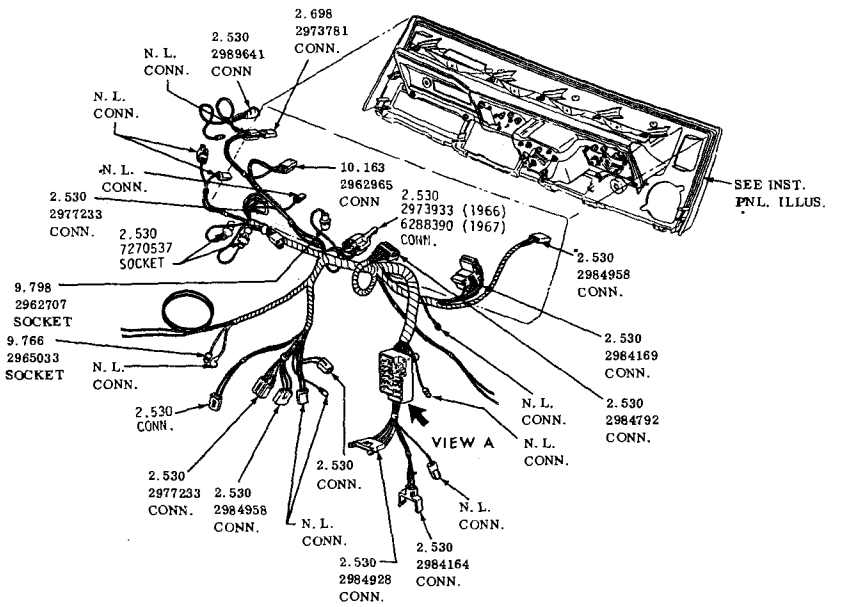

NOTE; ALL CONNECTORS INCL. IN 2.480 -HARNESS, INST. PNL.

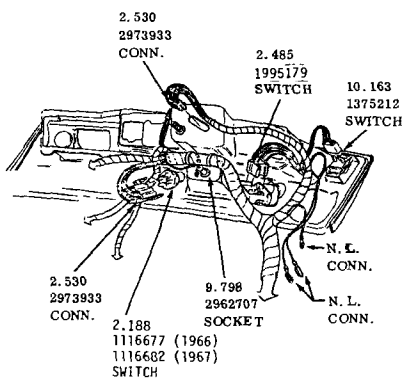

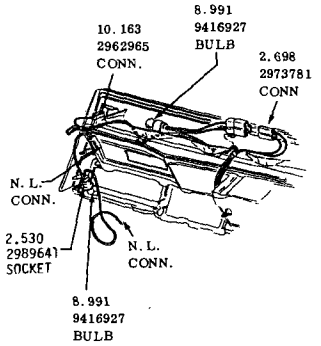

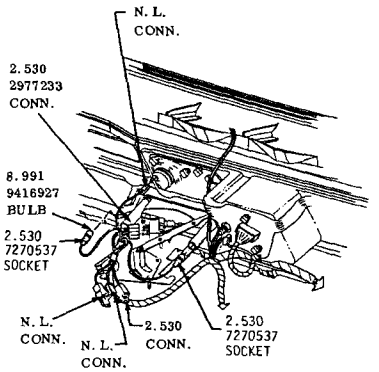

VIEW A

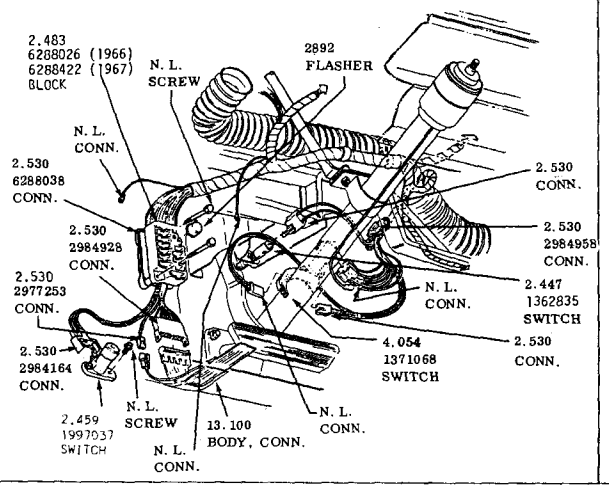

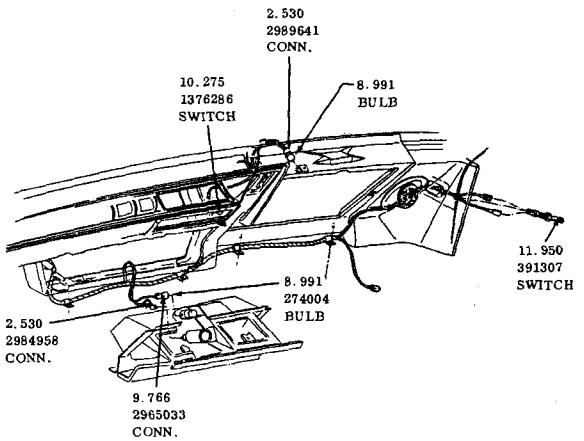

INSTRUMENT PANEL WIRING
1966-1967 —RIVIERA

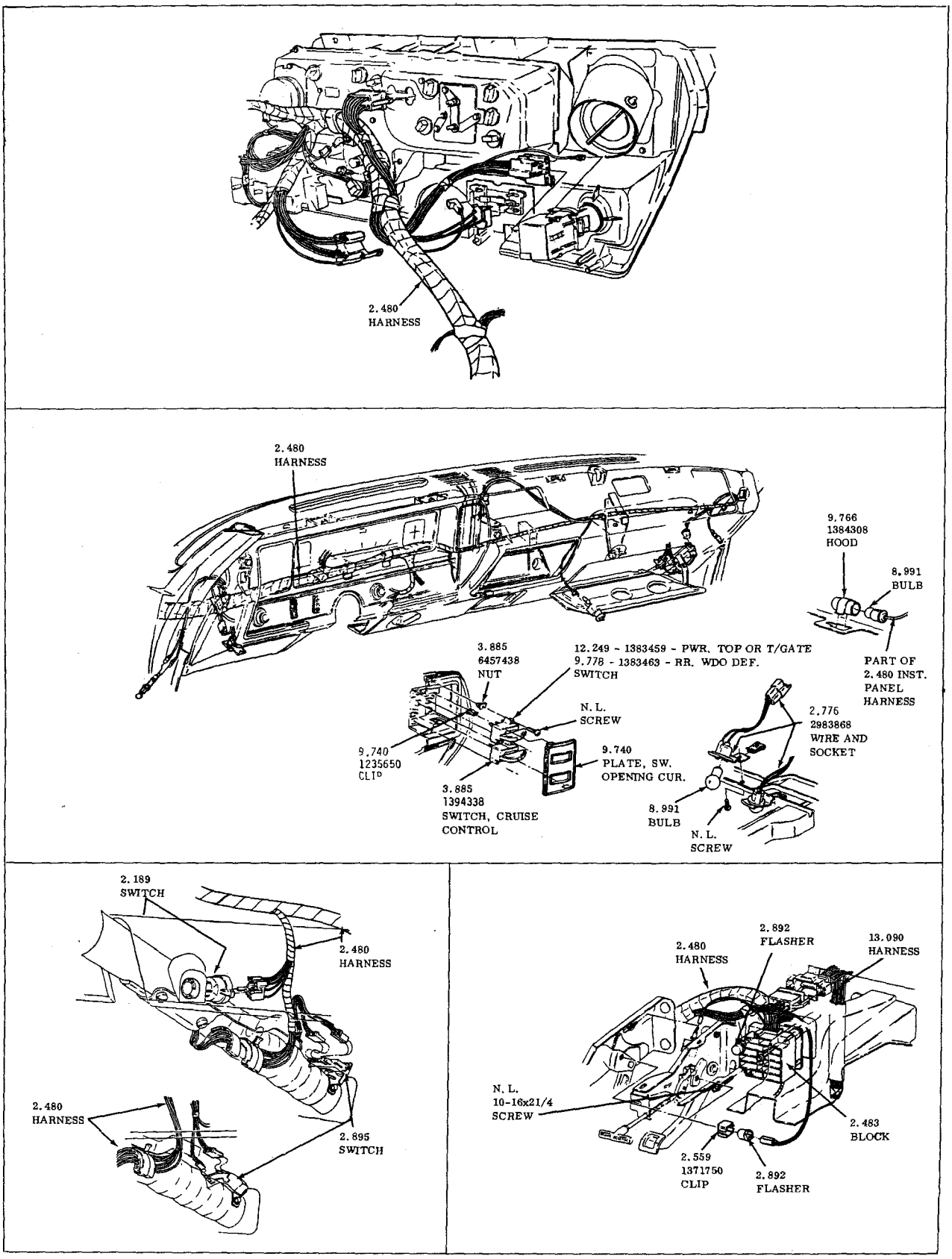

INSTRUMENT PANEL WIRING
1968-30-4000

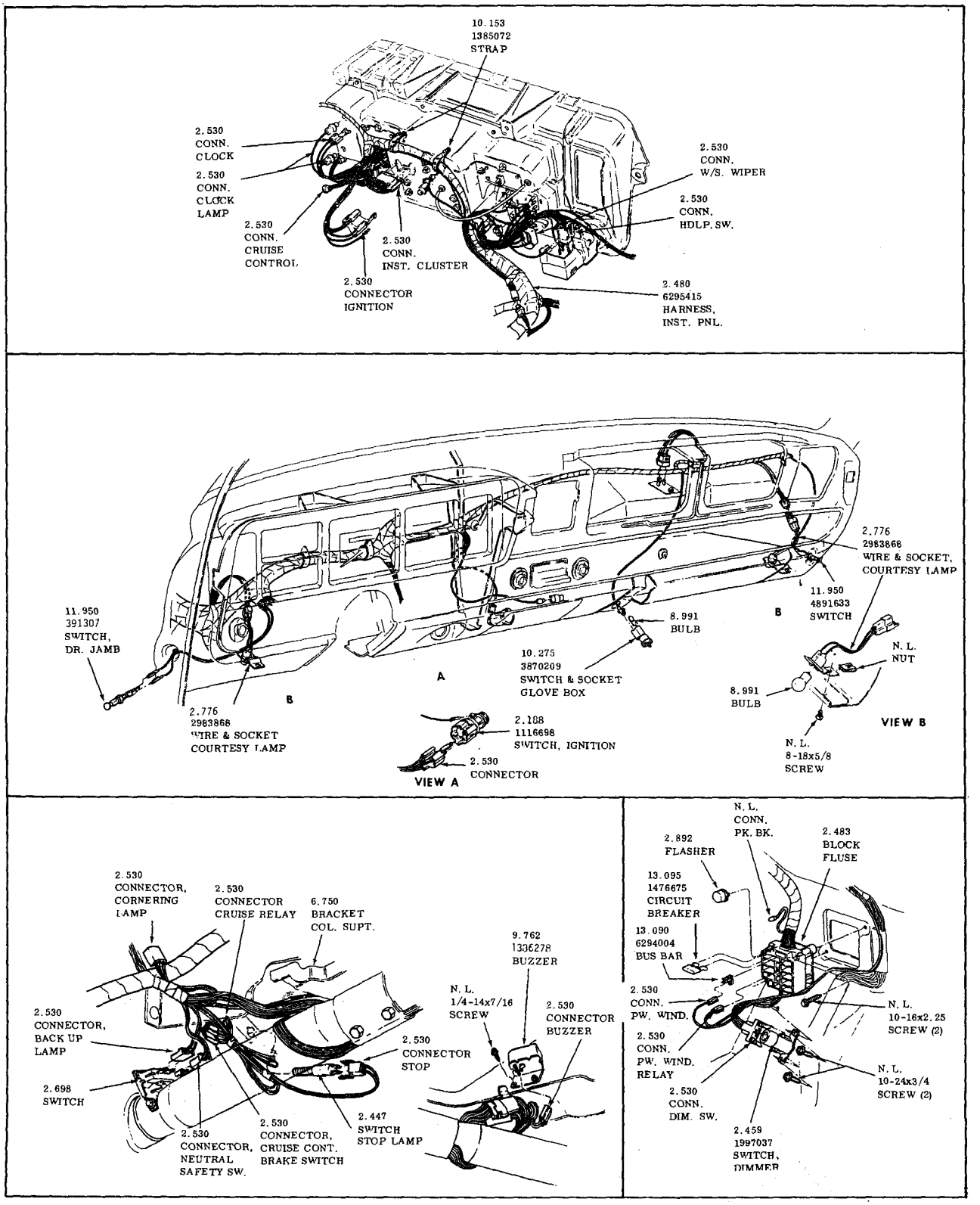

INSTRUMENT PANEL WIRING
1968-50-60-8000

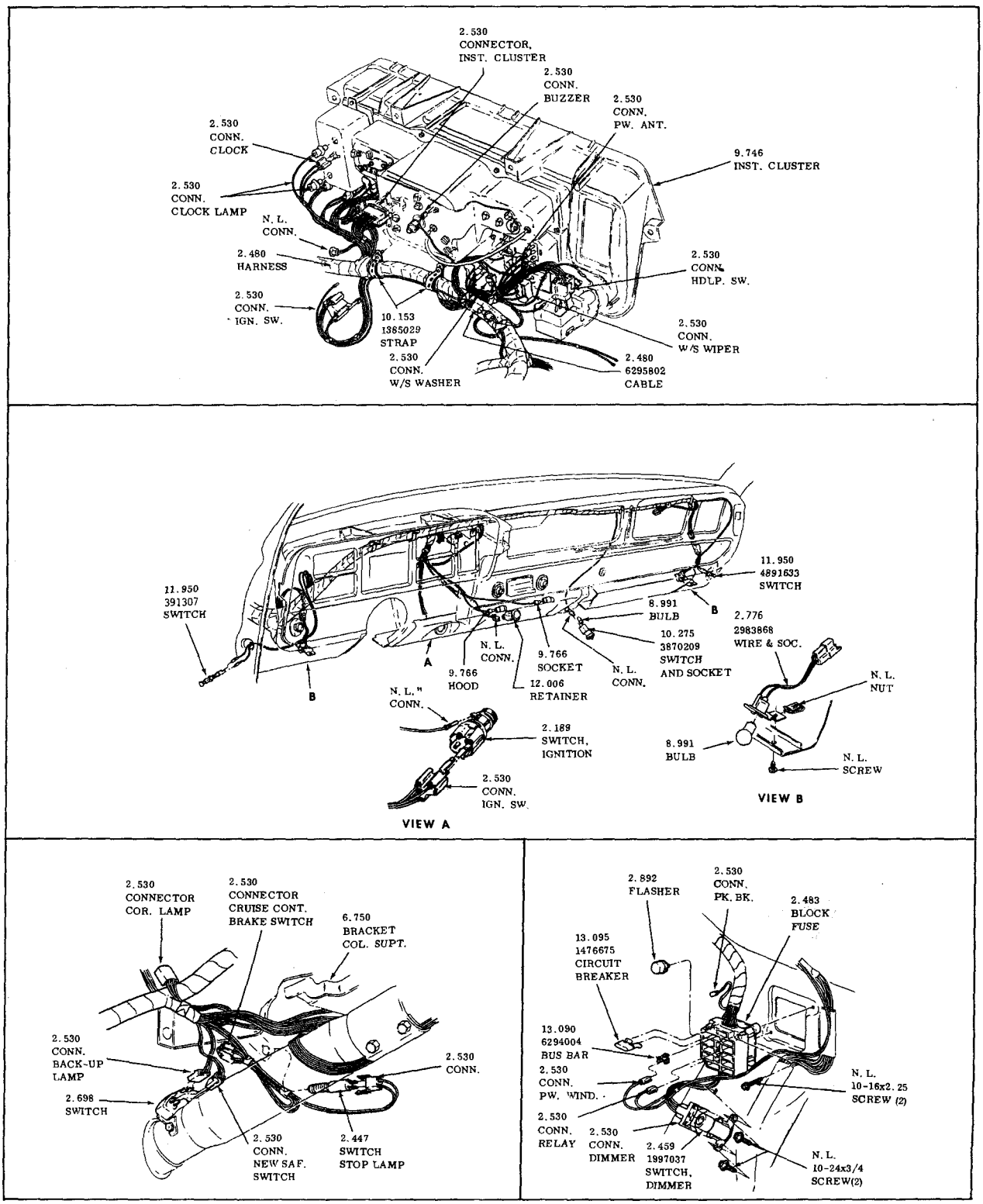

INSTRUMENT PANEL WIRING
1968 - RIVIERA

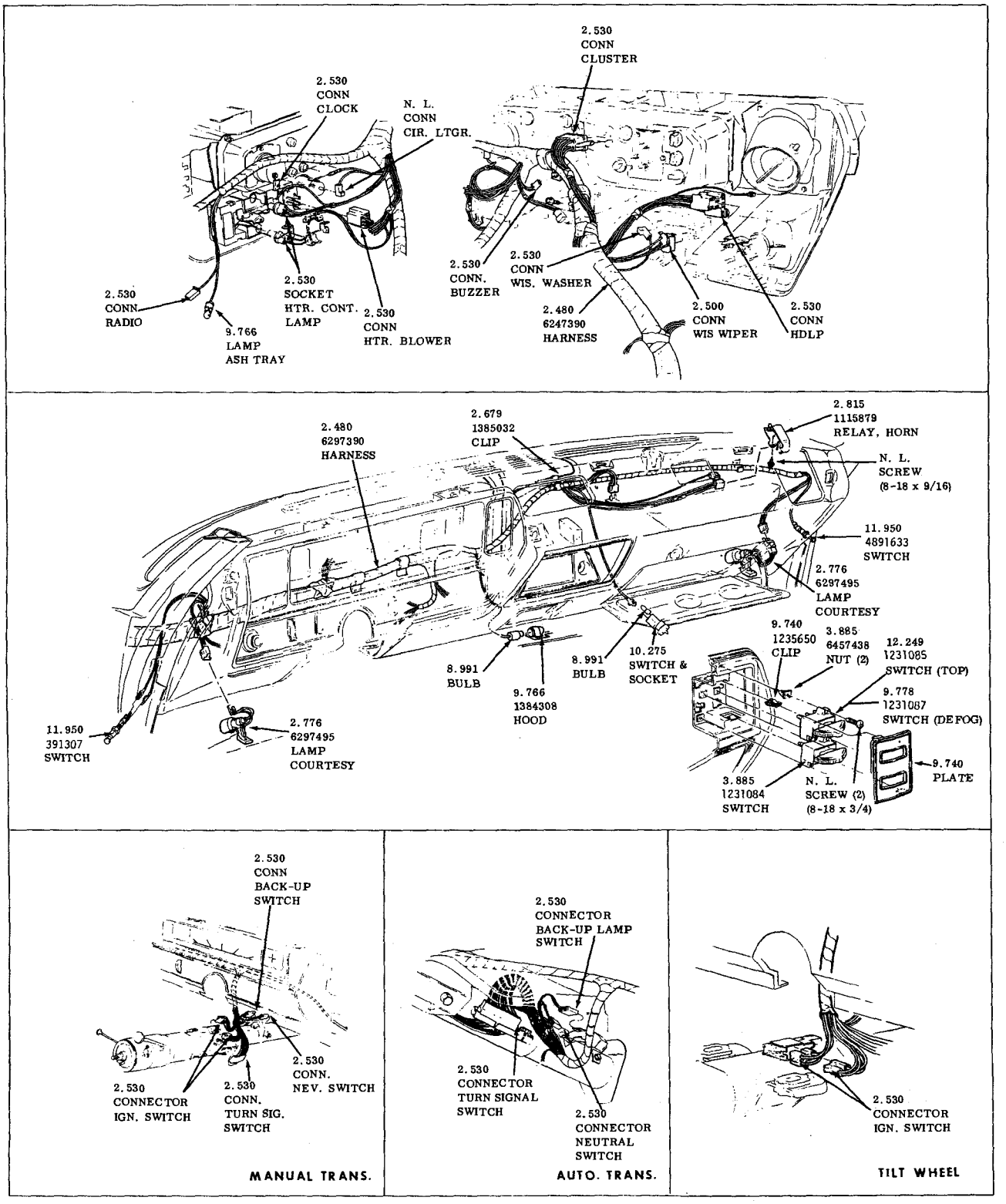

INSTRUMENT PANEL WIRING
1969-30-4000

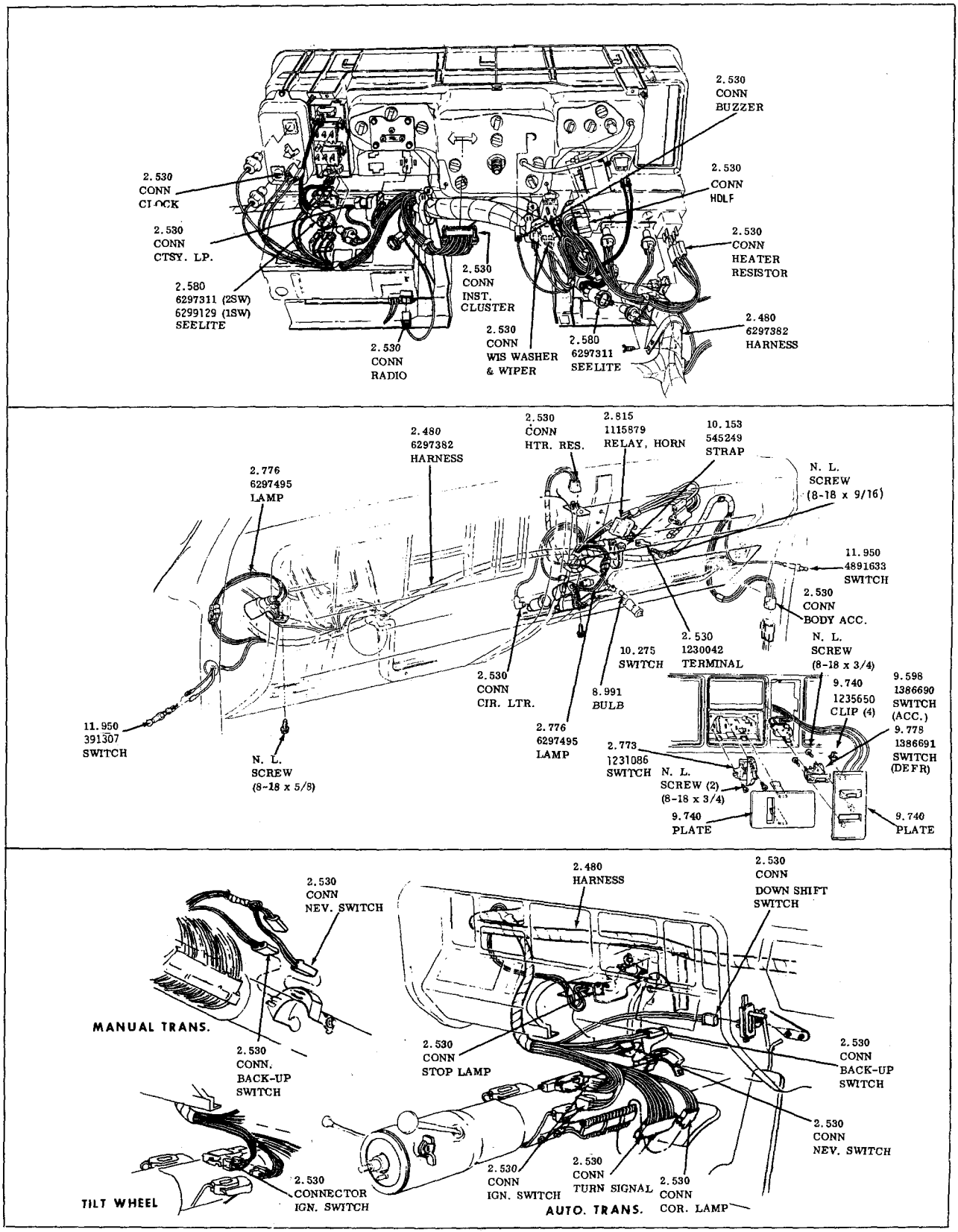

INSTRUMENT PANEL WIRING
1969-50-60-8000

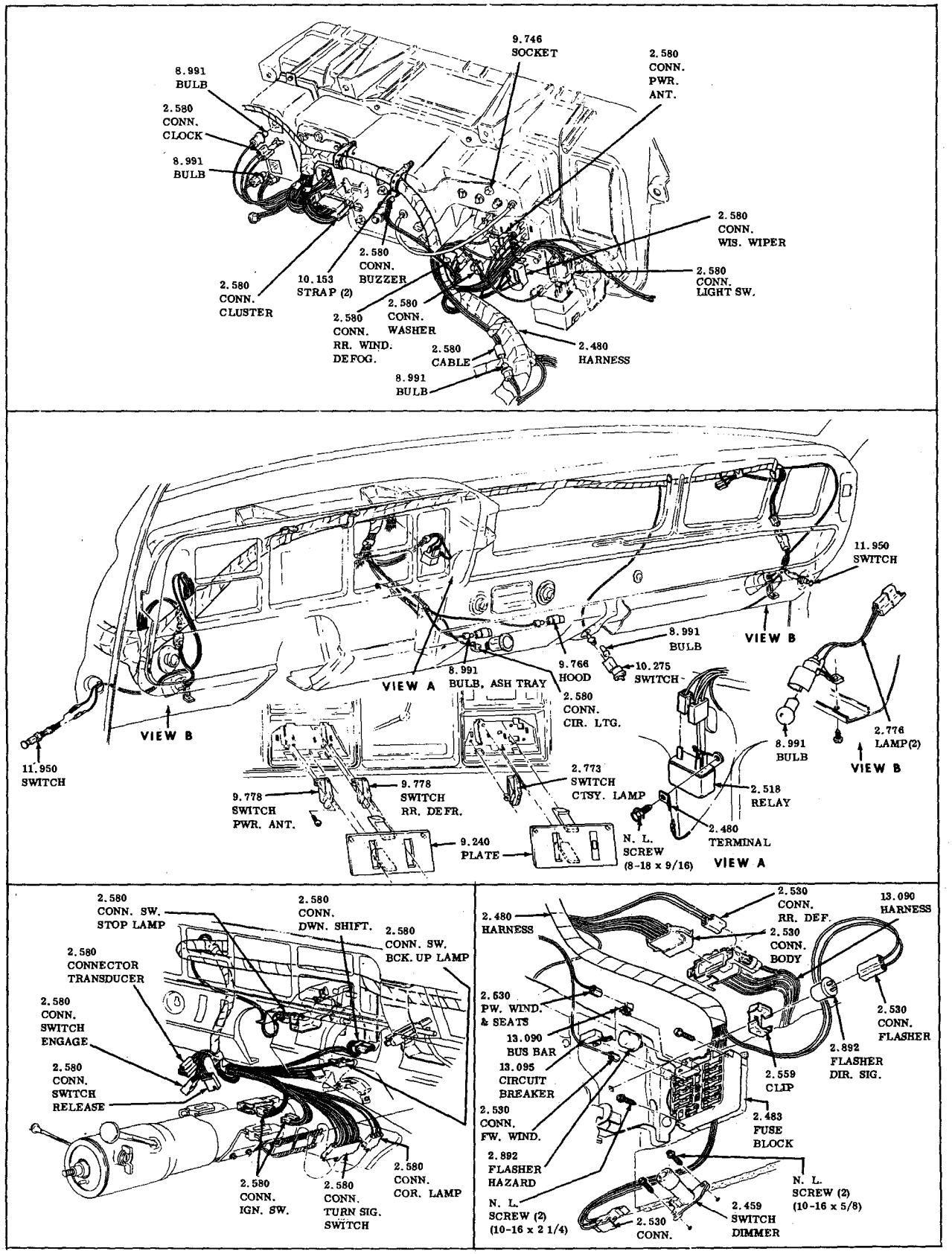

INSTRUMENT PANEL WIRING
1969-RIVIERA

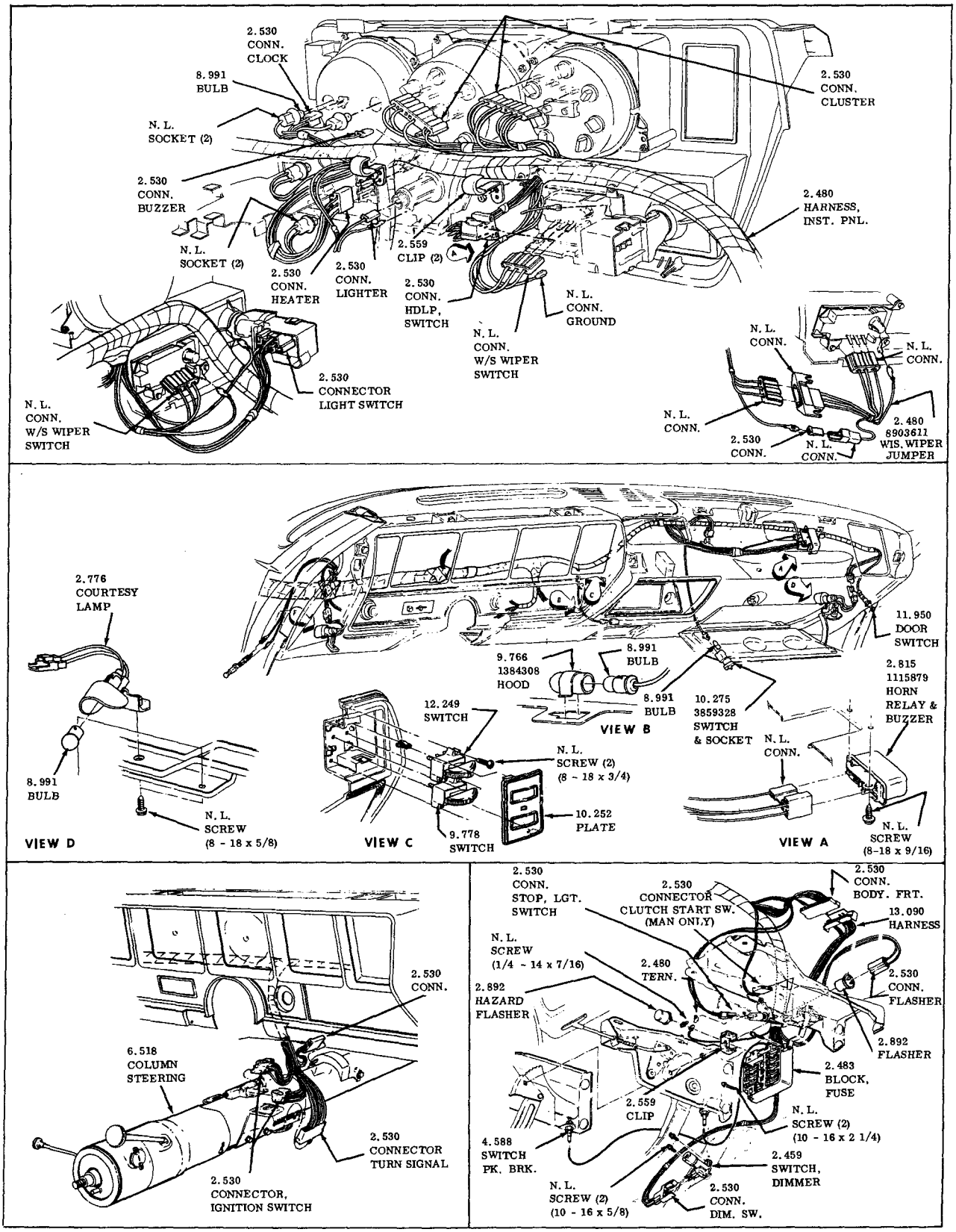

INSTRUMENT PANEL

1970-1972 30-4000

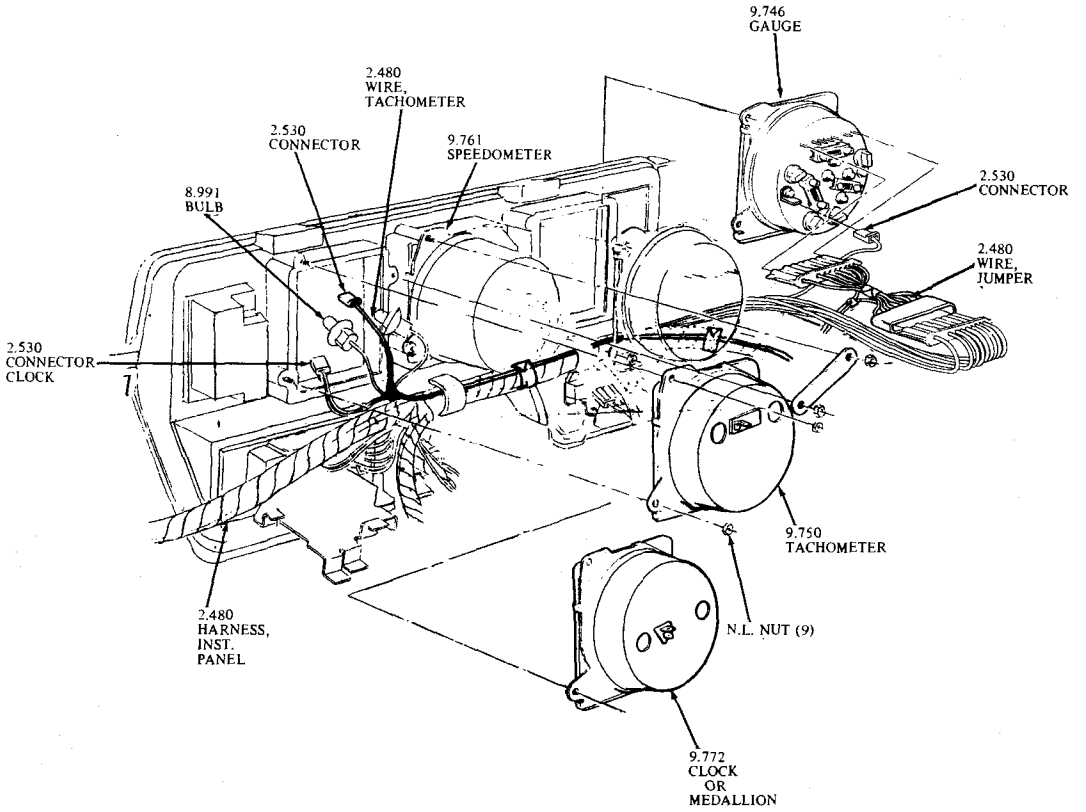

WIRING - GAGES, TACHOMETER & RALLYE CLOCK

1971-1972 30-4000

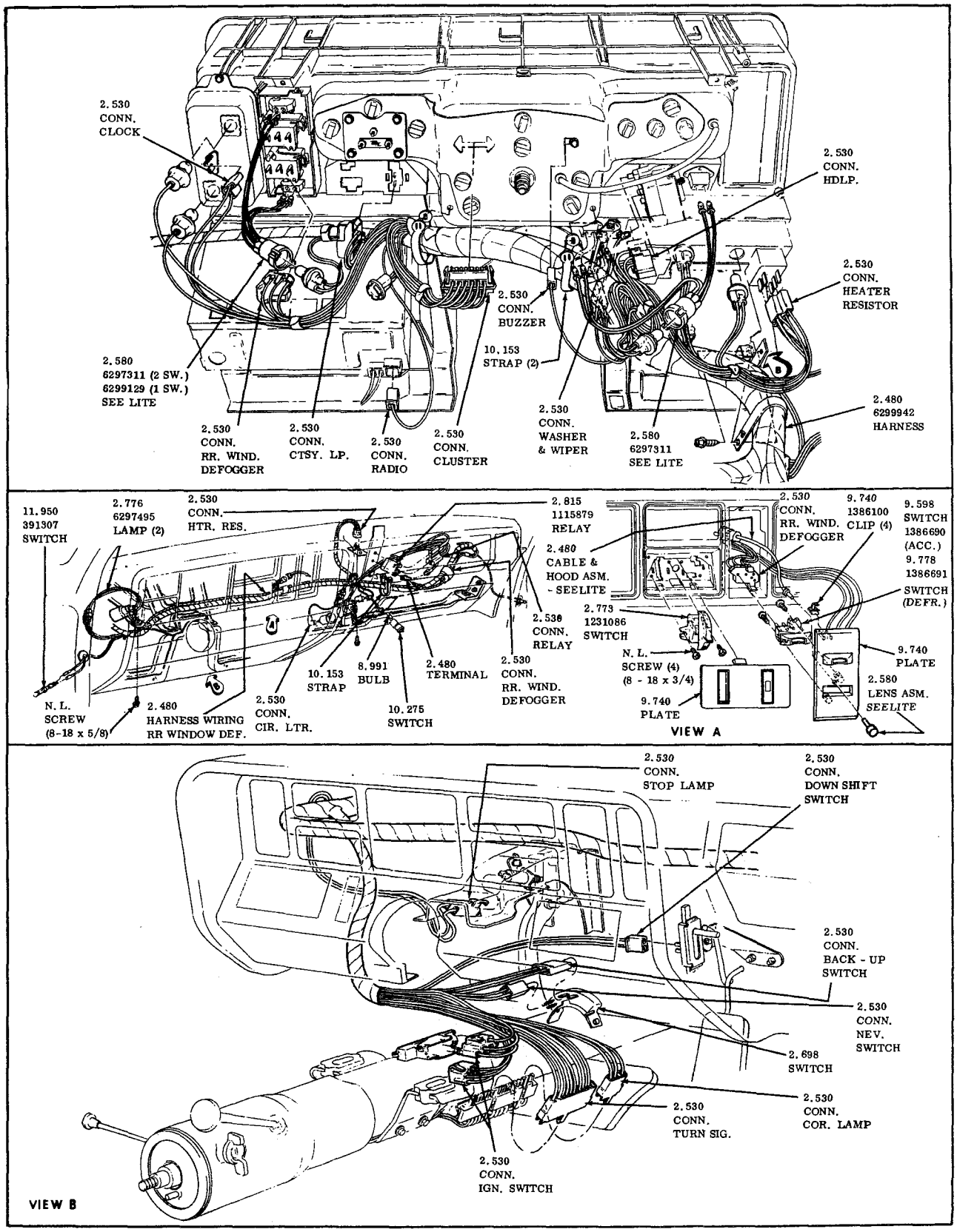

INSTRUMENT PANEL WIRING
1970-50-60-8000

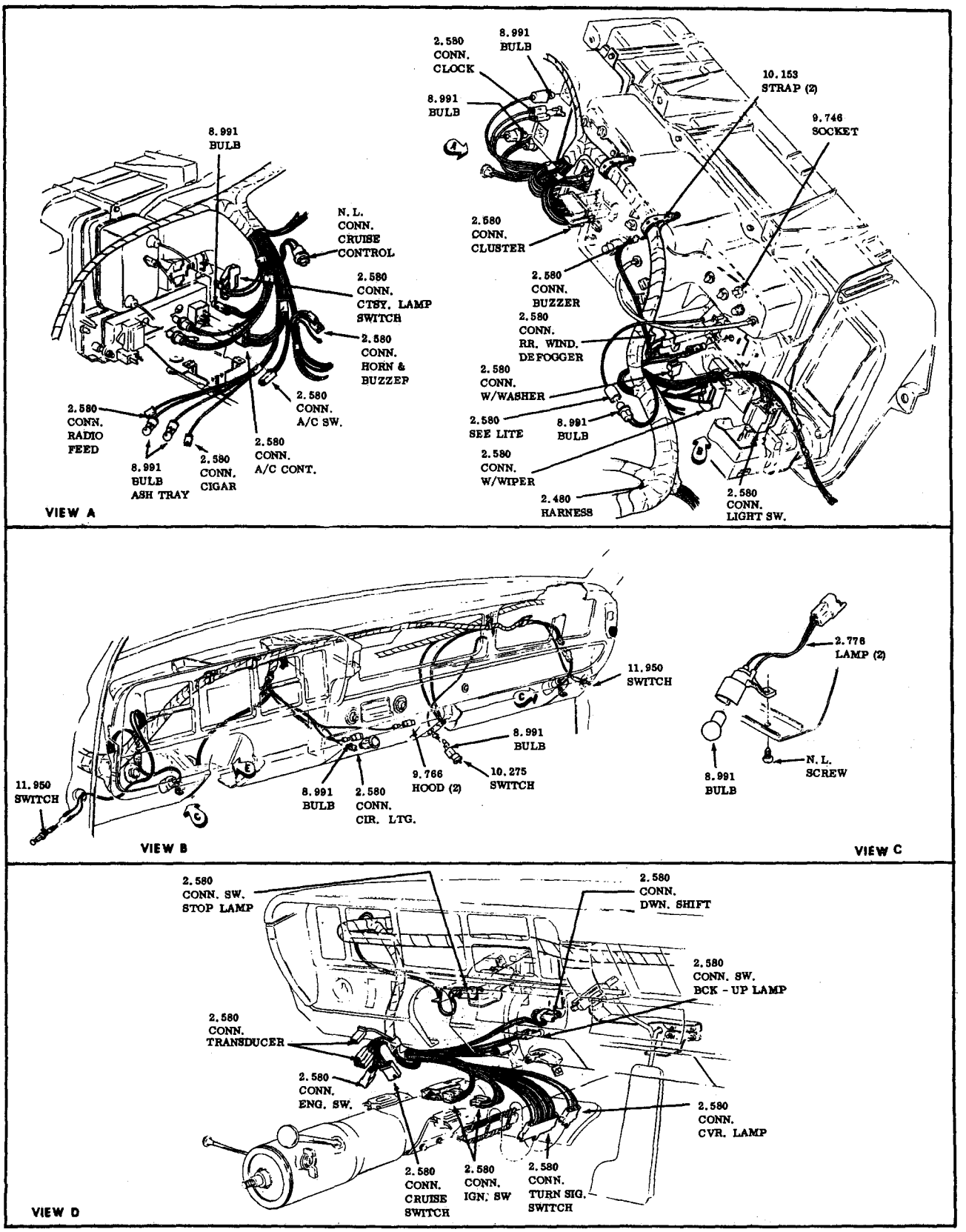

INSTRUMENT PANEL WIRING
1970-9000

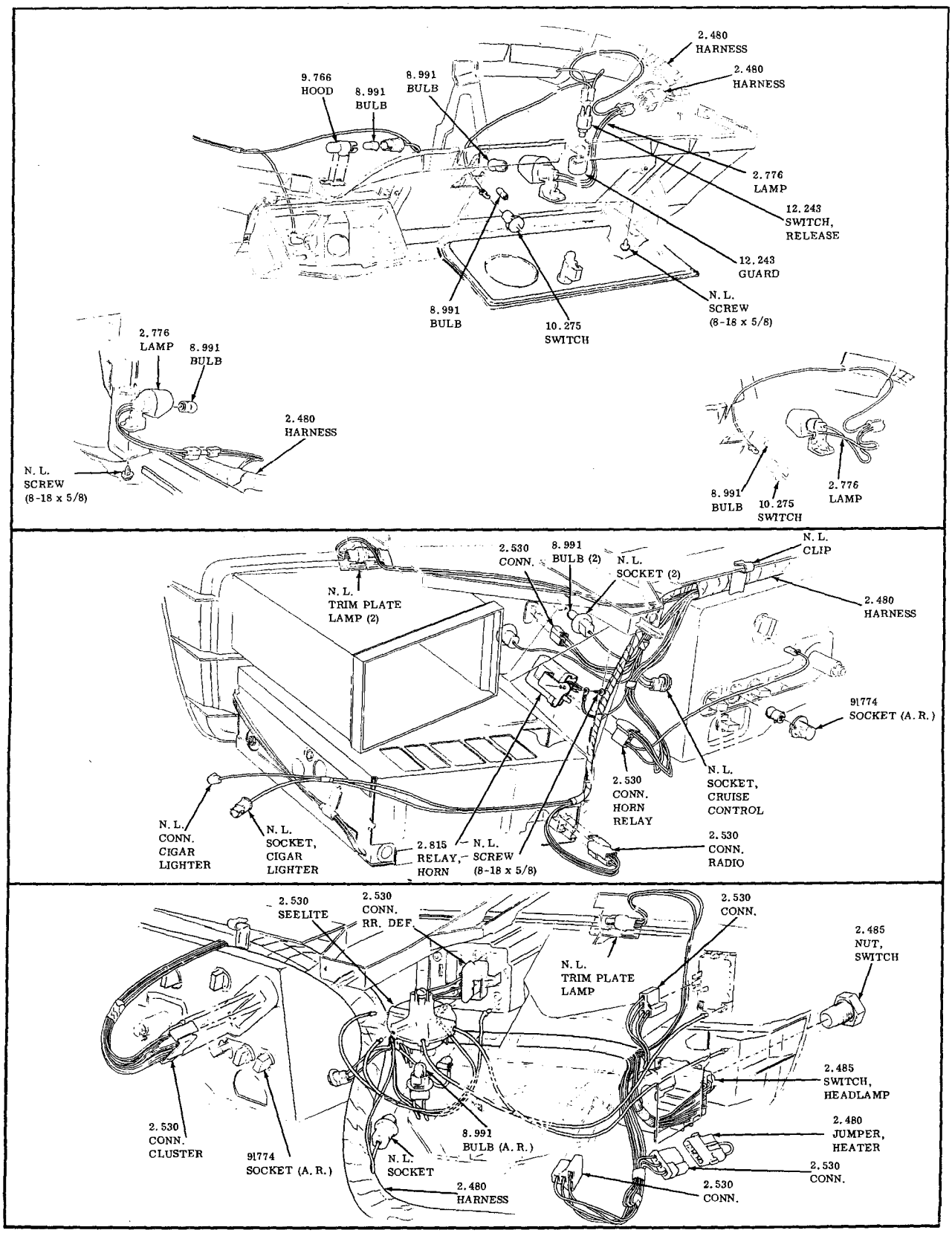

INSTRUMENT PANEL WIRING

1971-1972 50-60-80-9000

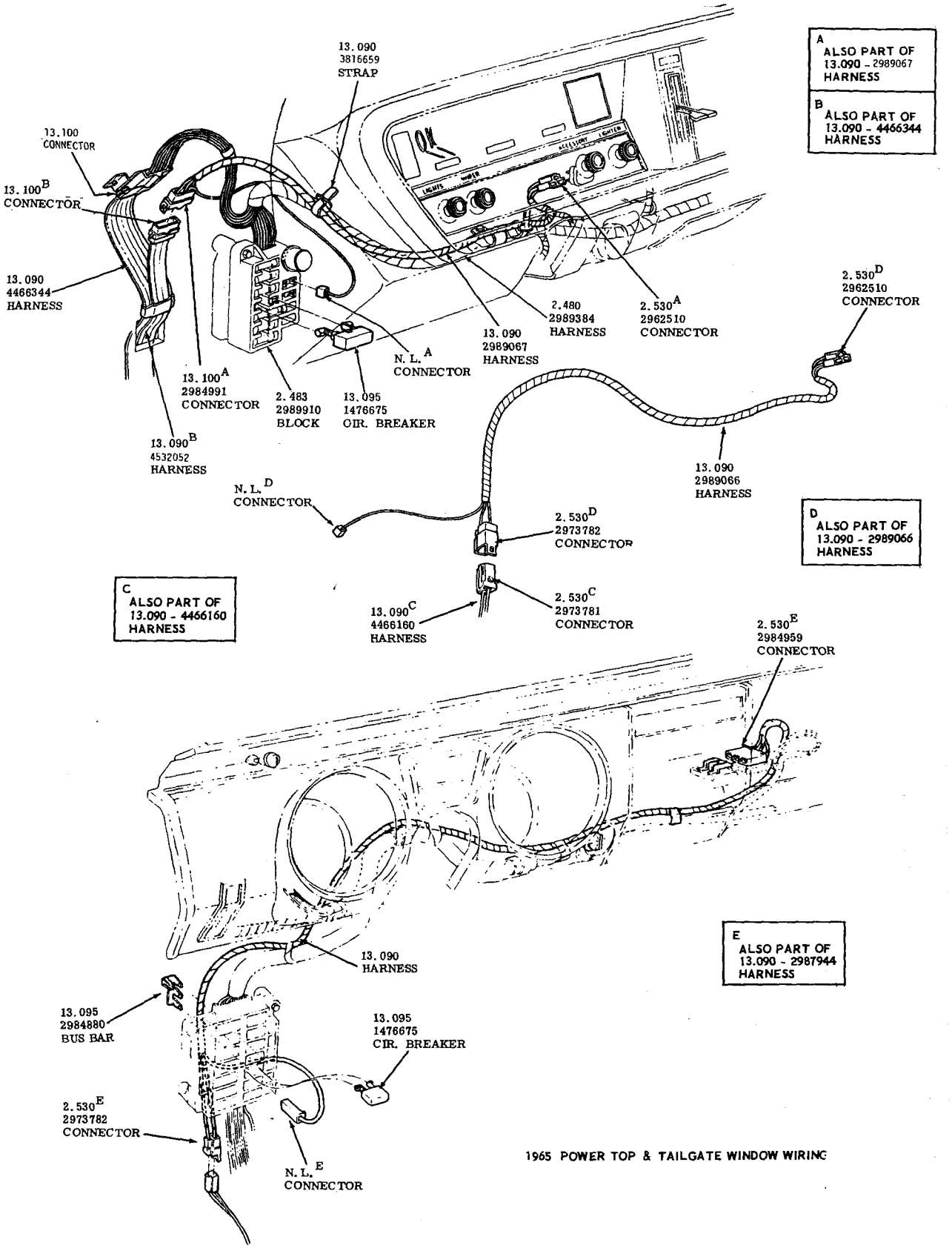

1965 POWER TOP & TAILGATE WINDOW WIRING

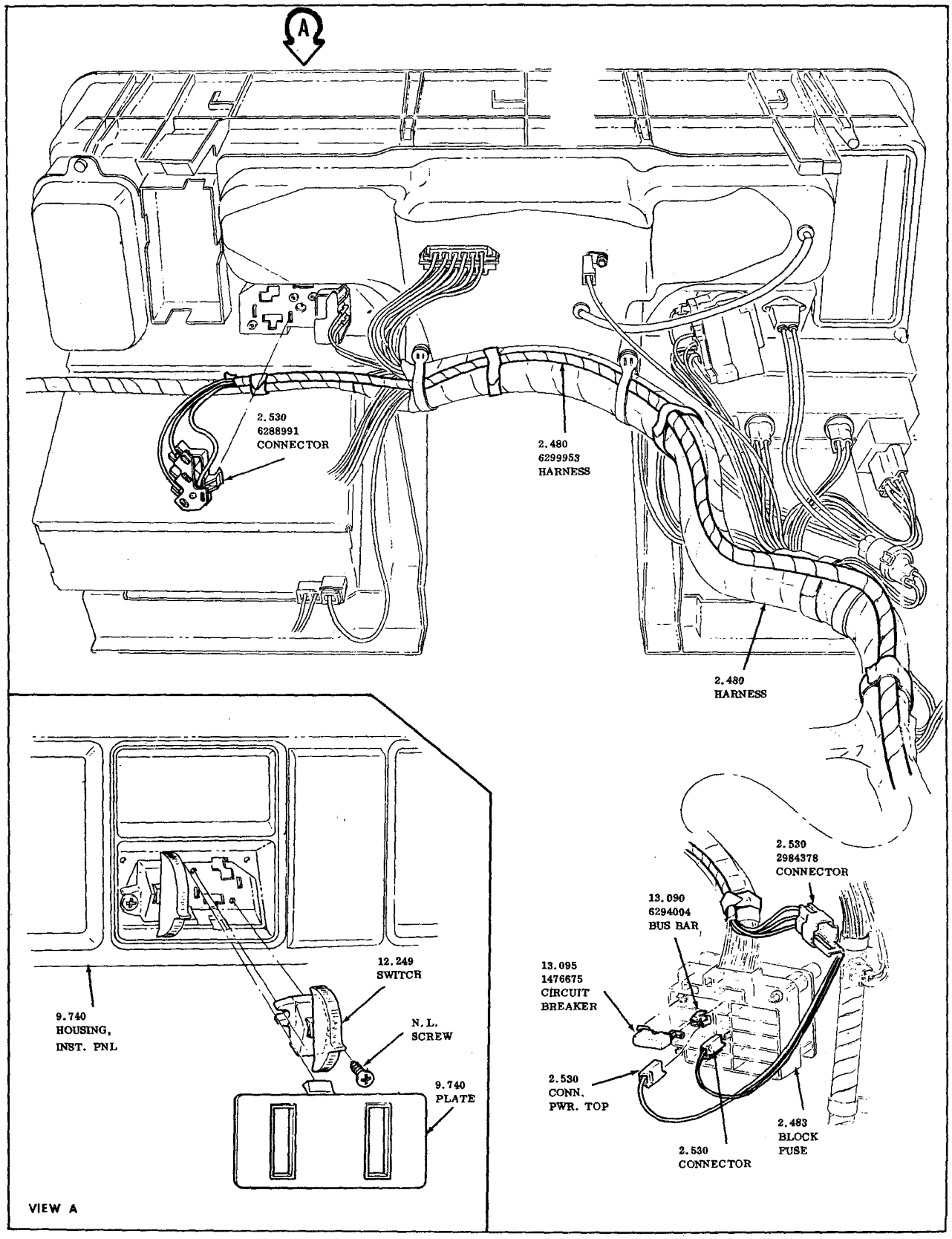

POWER TOP WIRING
1970-50-60-8000

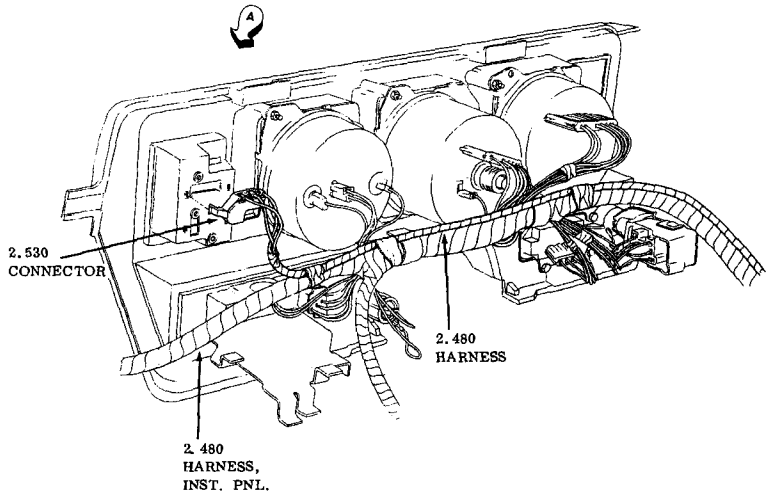

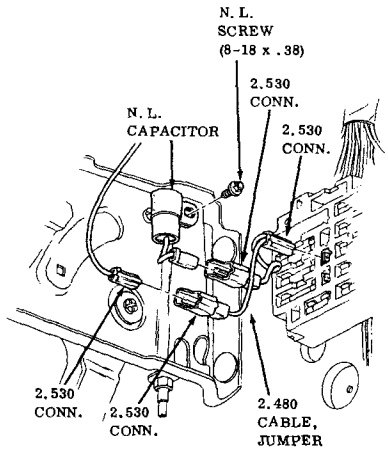

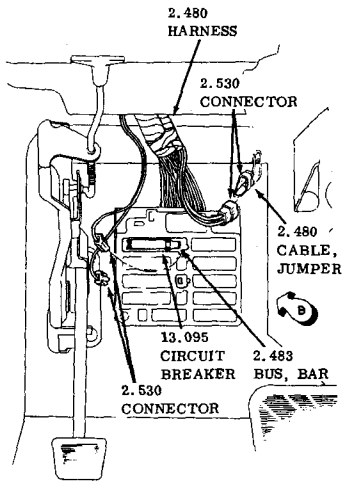

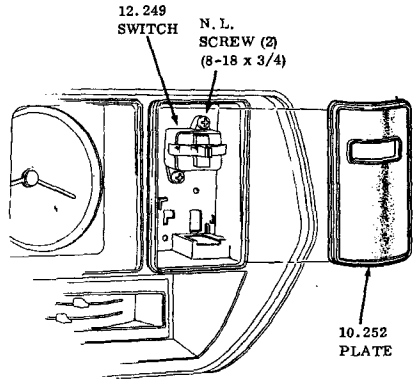

VIEW A

WIRING - POWER TOP AND TAIL GATE WINDOW
1971-1972 30-4000

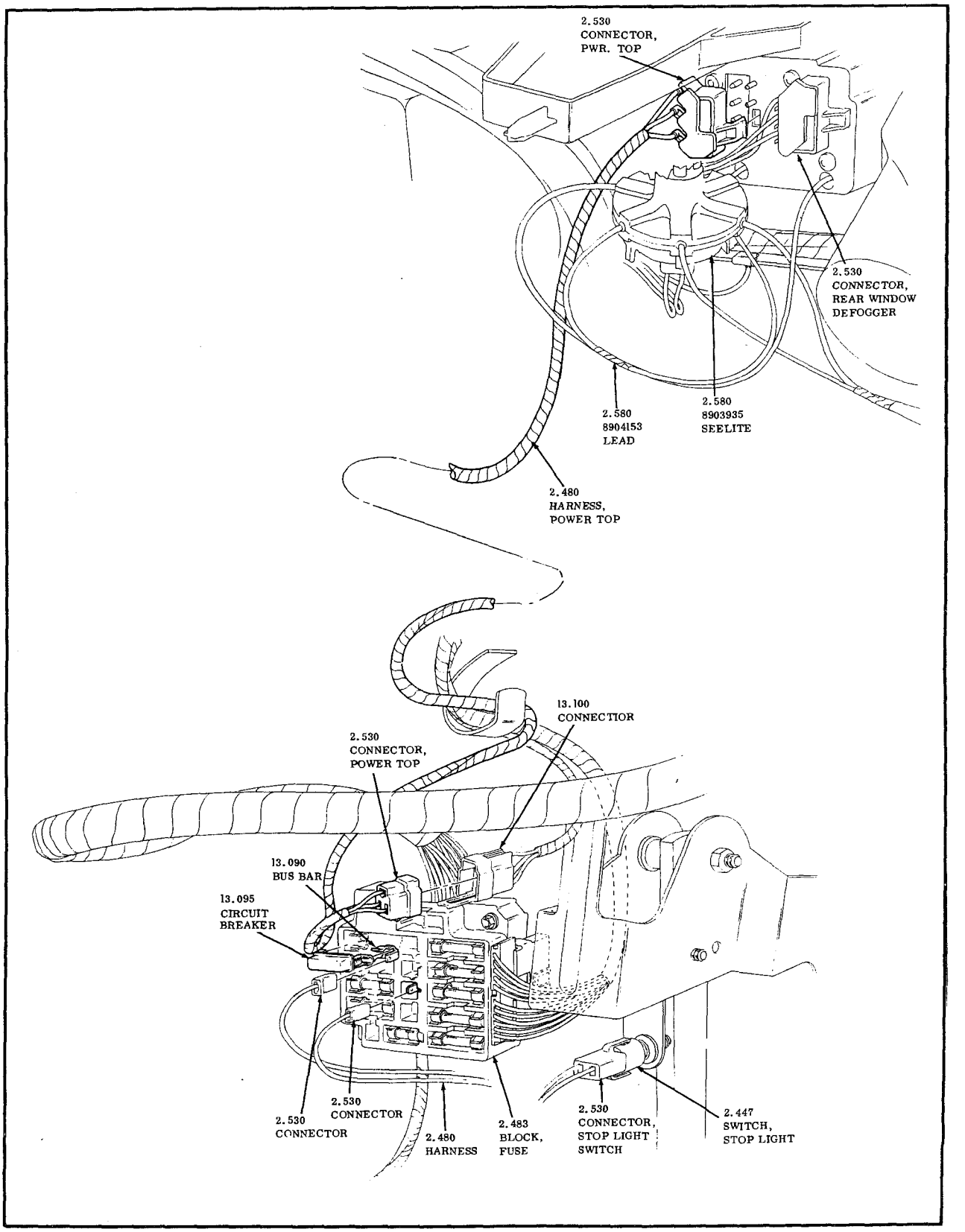

WIRING - POWER TOP & TAILGATE WINDOW

1971 - 1972 50-6000

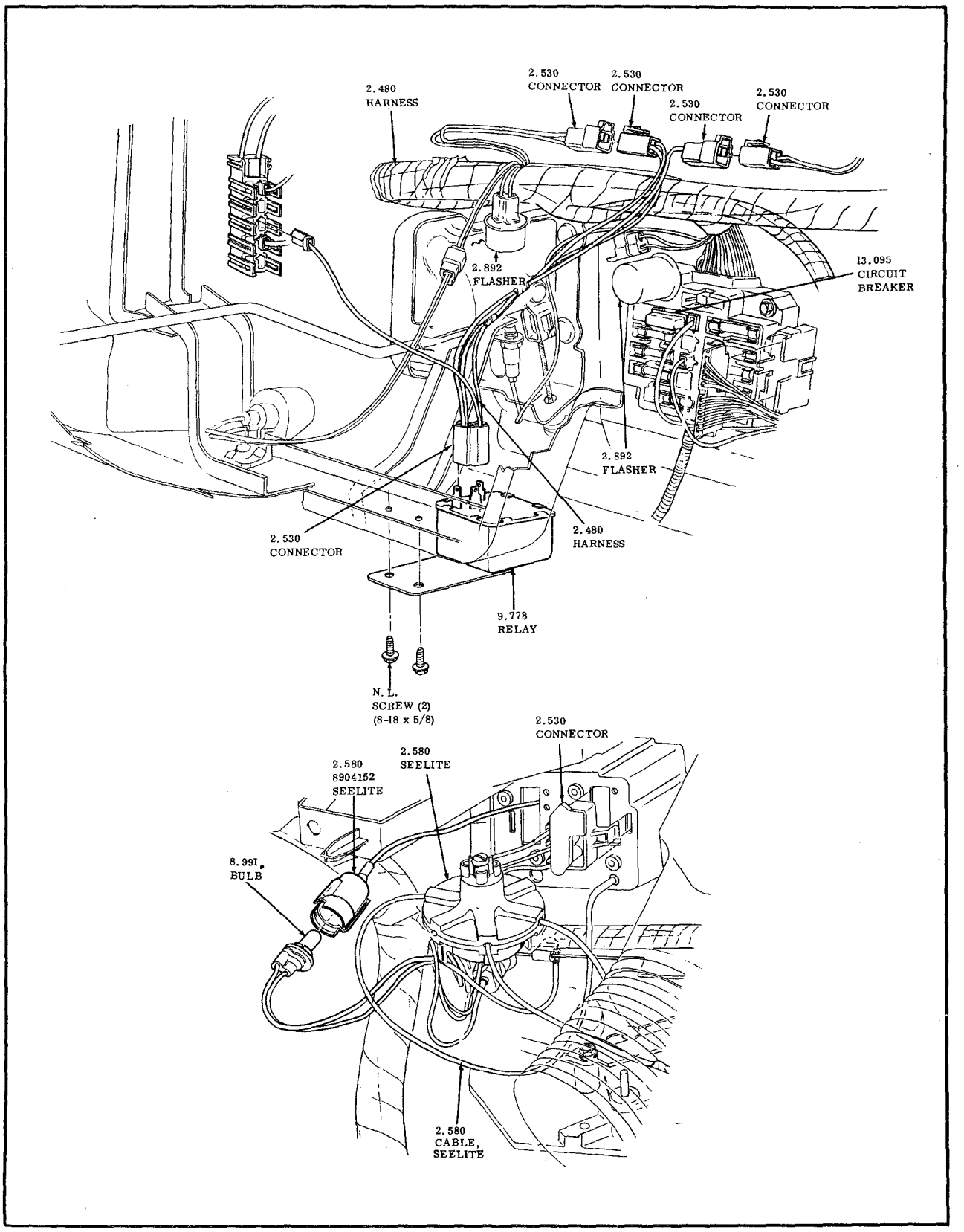

WIRING - HEATED GLASS REAR DEFOGGER

1971 - 1972 50-60-80-9000

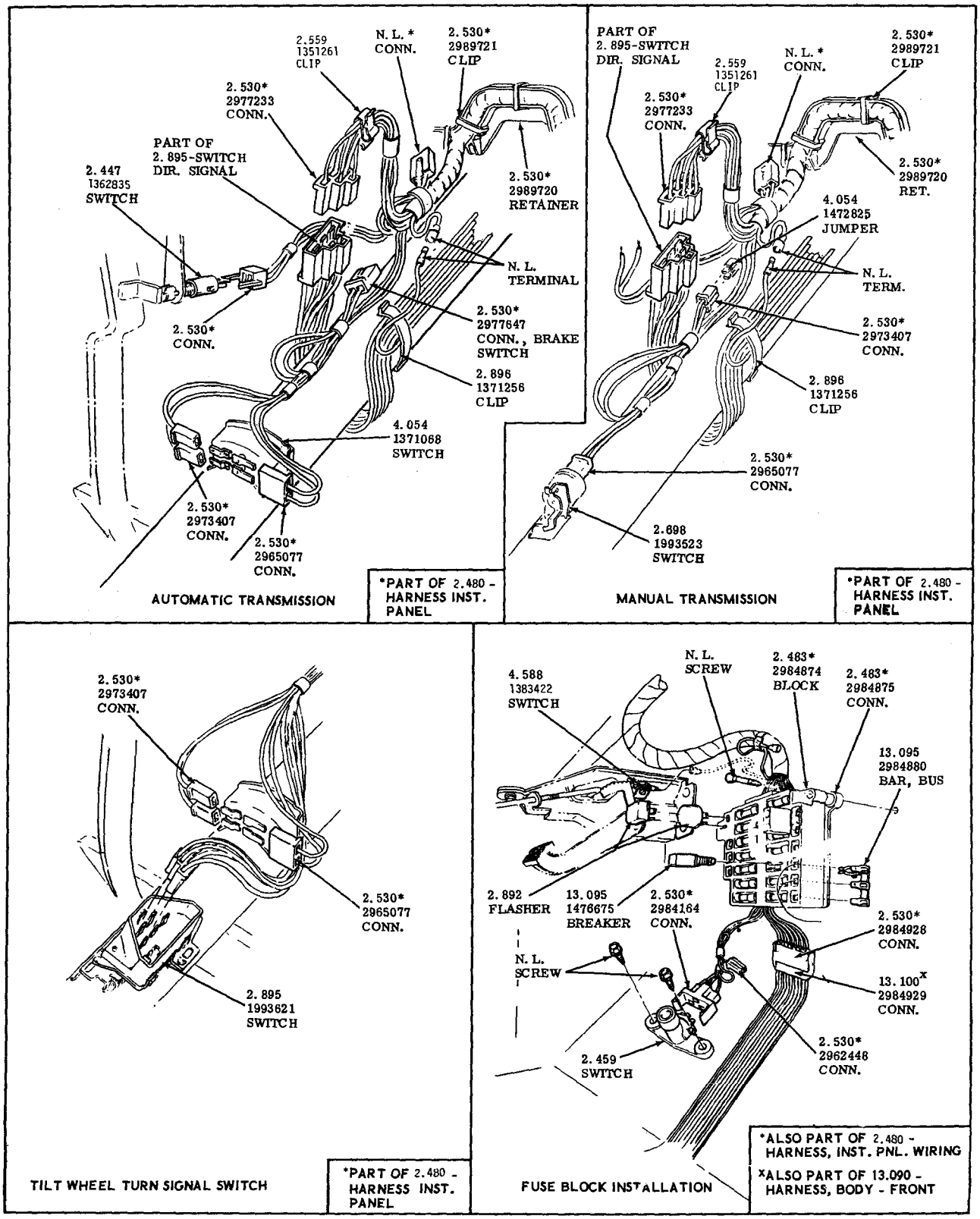

STEERING COLUMN AND FUSE BLOCK WIRING
1965 - LESABRE- WILDCAT - ELECTRA 225

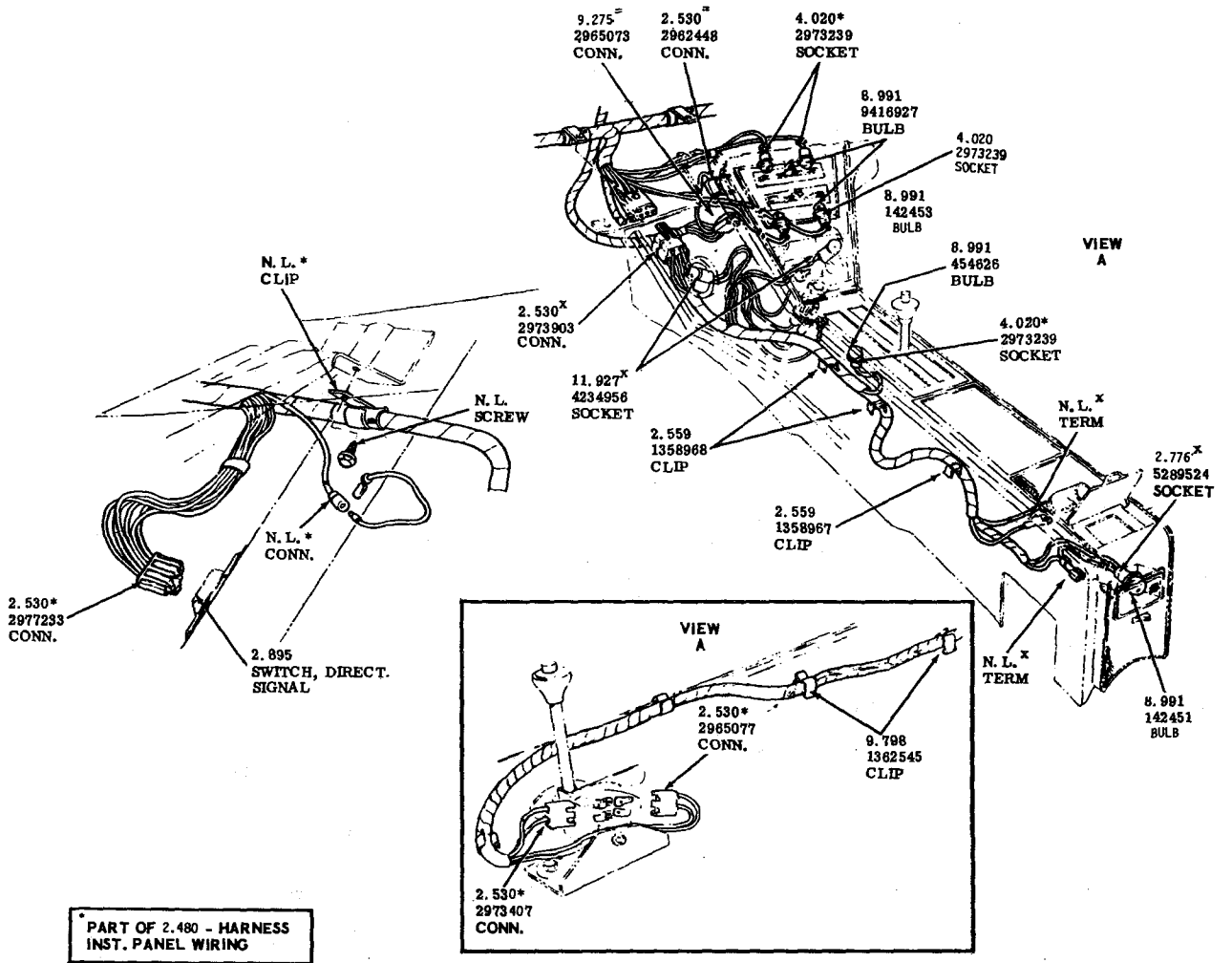

*PART OF 2.480 - HARNESS INST. PANEL WIRING
xPART OF 2.480 - HARNESS CONSOLE WIRING
=PART OF 2.480 - HARNESS, HEATER

CONSOLE AND STEERING COLUMN WIRING
1965 - RIVIERA

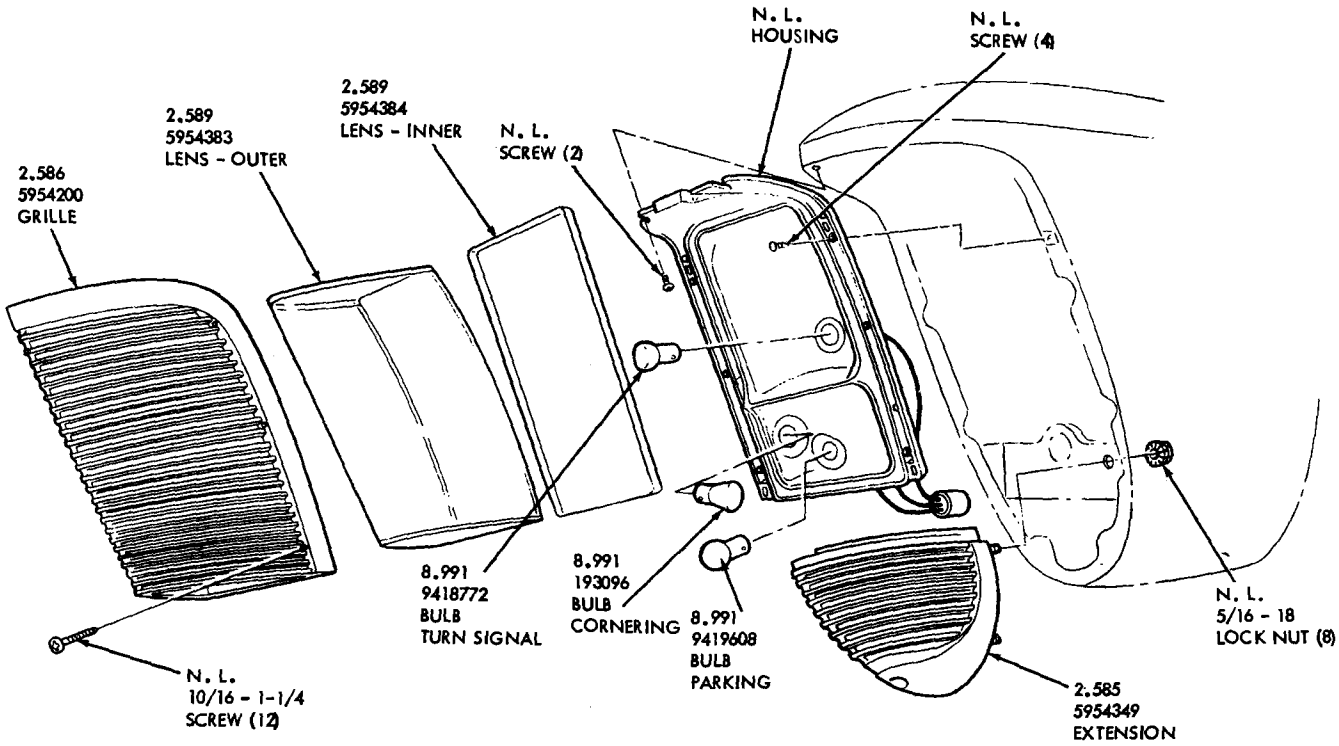

NOTE: COMPLETE LAMP
GROUP 2.585 – 928821 (L)
–928822 (R)

1963—1964 FRONT FENDER CORNERING, PARKING AND TURN SIGNAL LAMPS

4700

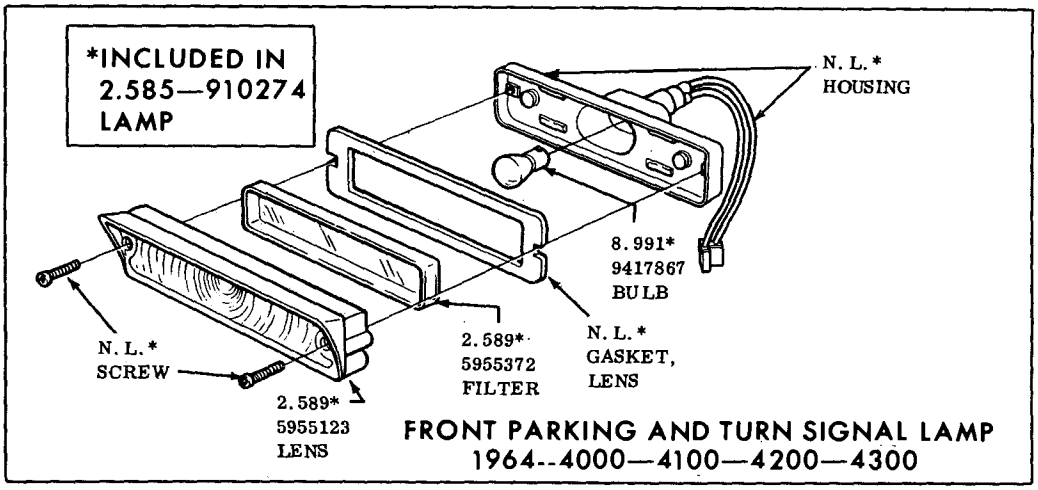

FRONT PARKING AND TURN SIGNAL LAMP
1964--4000—4100—4200—4300

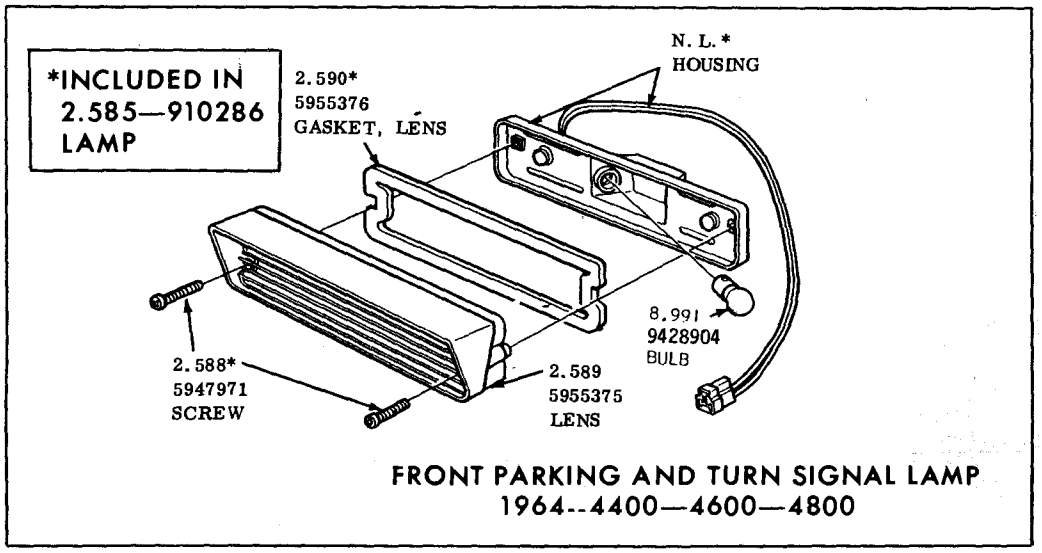

FRONT PARKING AND TURN SIGNAL LAMP
1964--4400—4600—4800

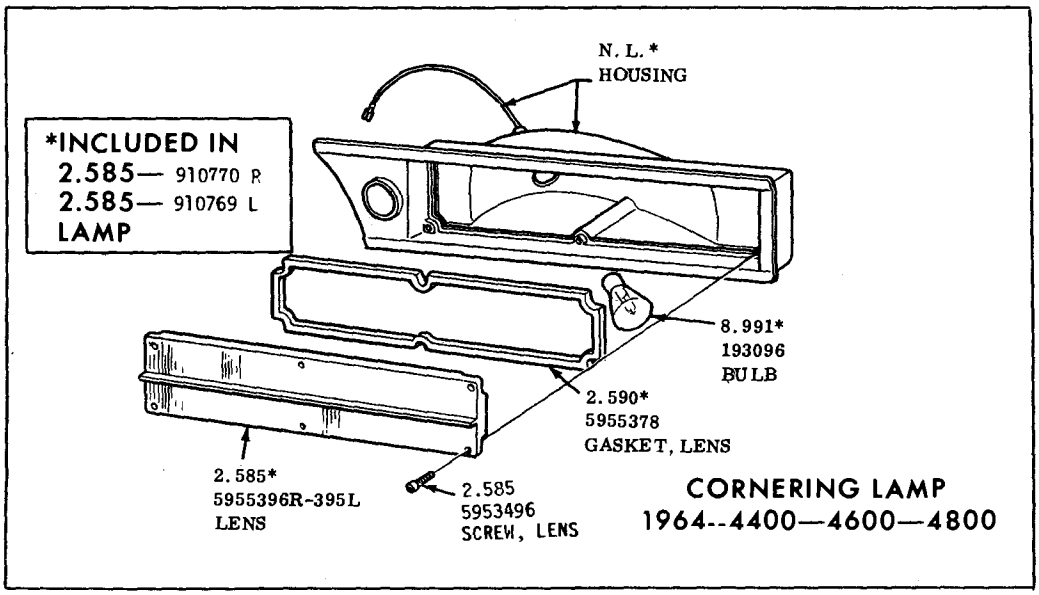

CORNERING LAMP
1964--4400—4600—4800

1964 FRONT PARKING, TURN SIGNAL AND CORNERING LAMPS

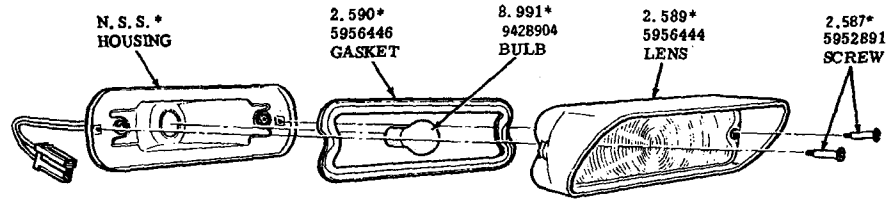

* PART OF 2.585 - 910304 LAMP

1965 3000 FRONT PARKING & DIRECTIONAL SIGNAL LAMP

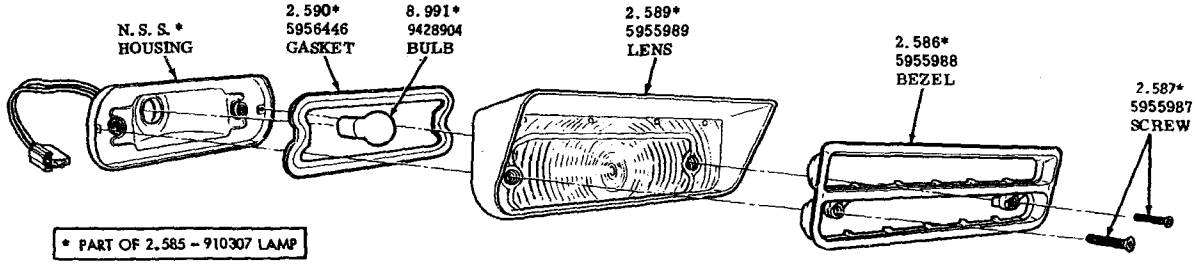

* PART OF 2.585 - 910307 LAMP

1965 4000 FRONT PARKING & DIRECTIONAL SIGNAL LAMP

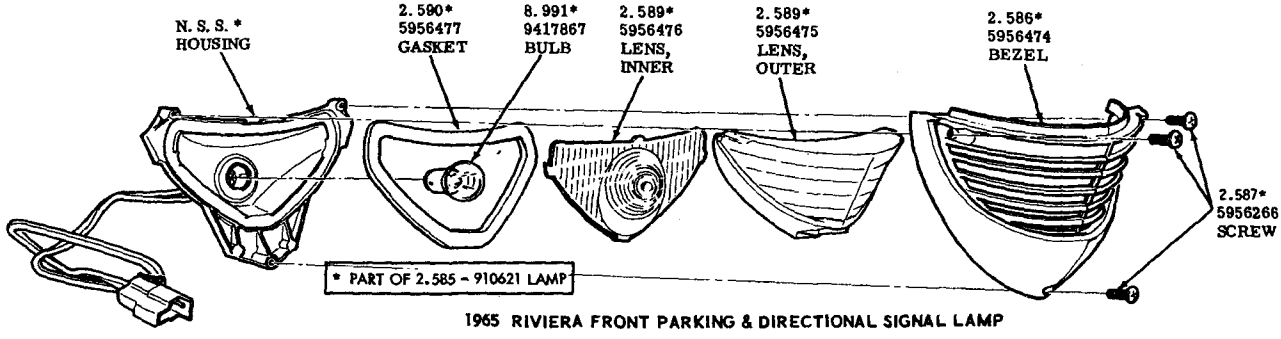

* PART OF 2.585 - 910621 LAMP

1965 RIVIERA FRONT PARKING & DIRECTIONAL SIGNAL LAMP

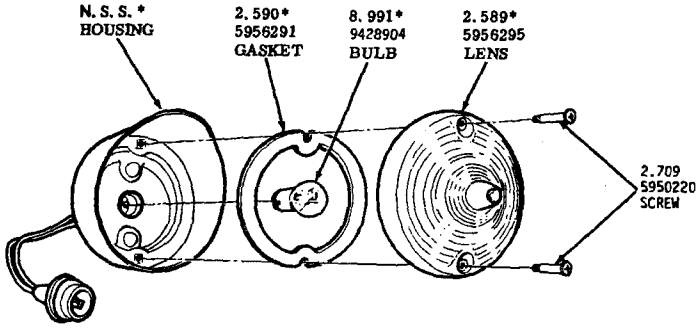

* PART OF 2.585 - 910752R - 751L LAMP

1965 LESABRE - WILDCAT - ELECTRA

FRONT PARKING & DIRECTIONAL SIGNAL LAMP

1965 FRONT PARKING AND DIRECTIONAL SIGNAL LAMP

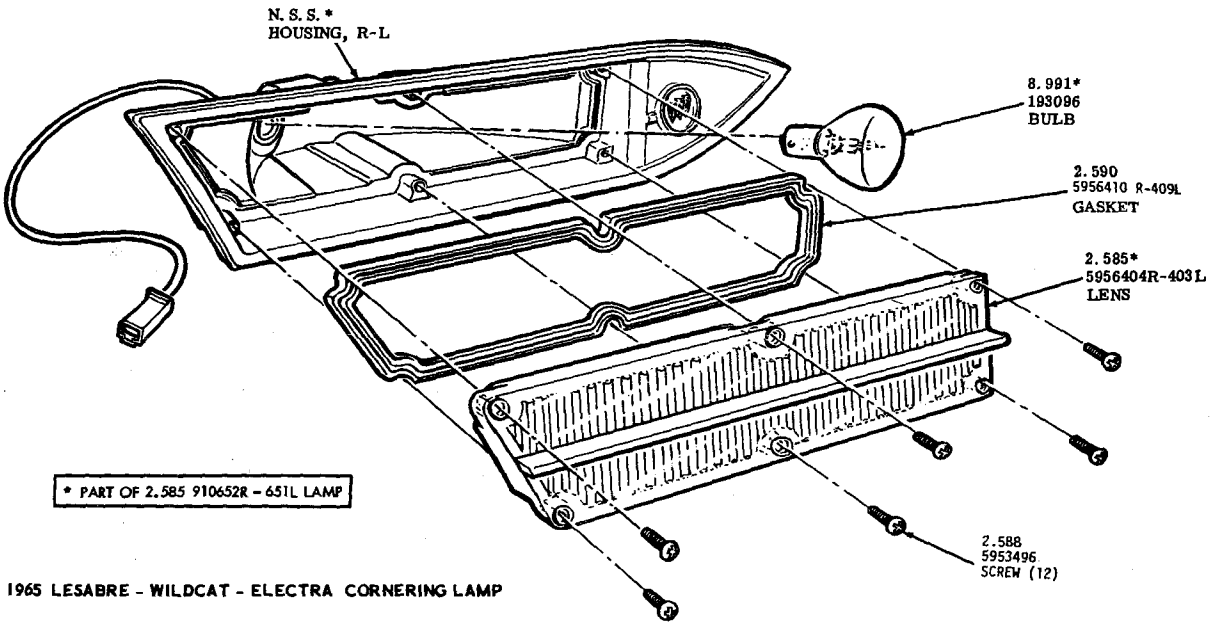

* PART OF 2.585 910652R - 651L LAMP

1965 LESABRE - WILDCAT - ELECTRA CORNERING LAMP

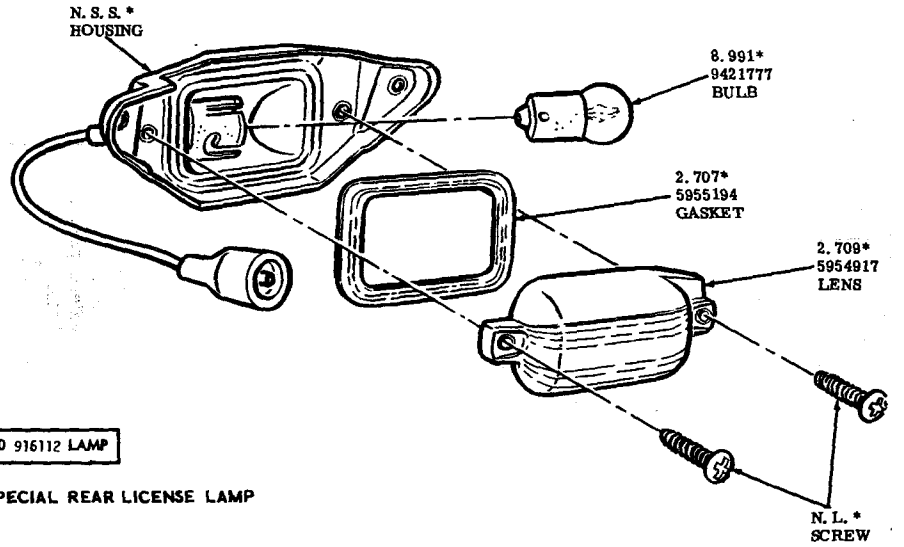

* PART OF 2.700 916112 LAMP

1965 SPECIAL REAR LICENSE LAMP

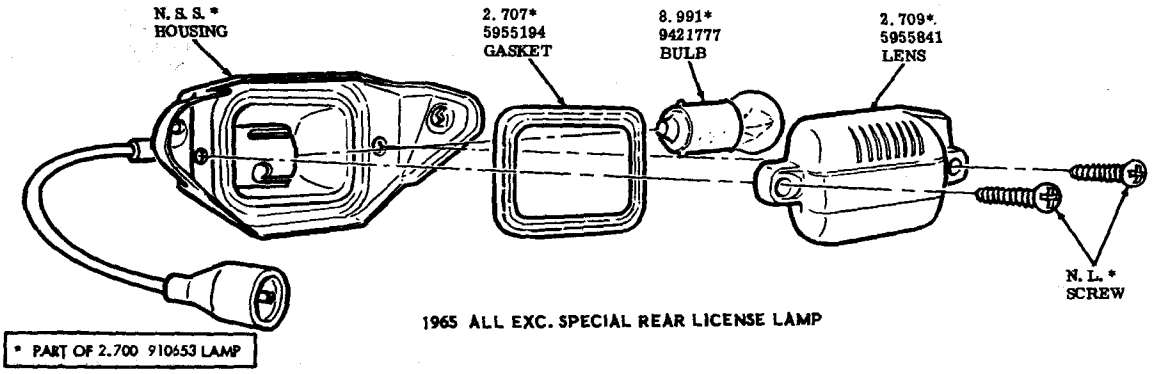

1965 ALL EXC. SPECIAL REAR LICENSE LAMP

* PART OF 2.700 910653 LAMP

1965 CORNERING AND REAR LICENSE LAMP

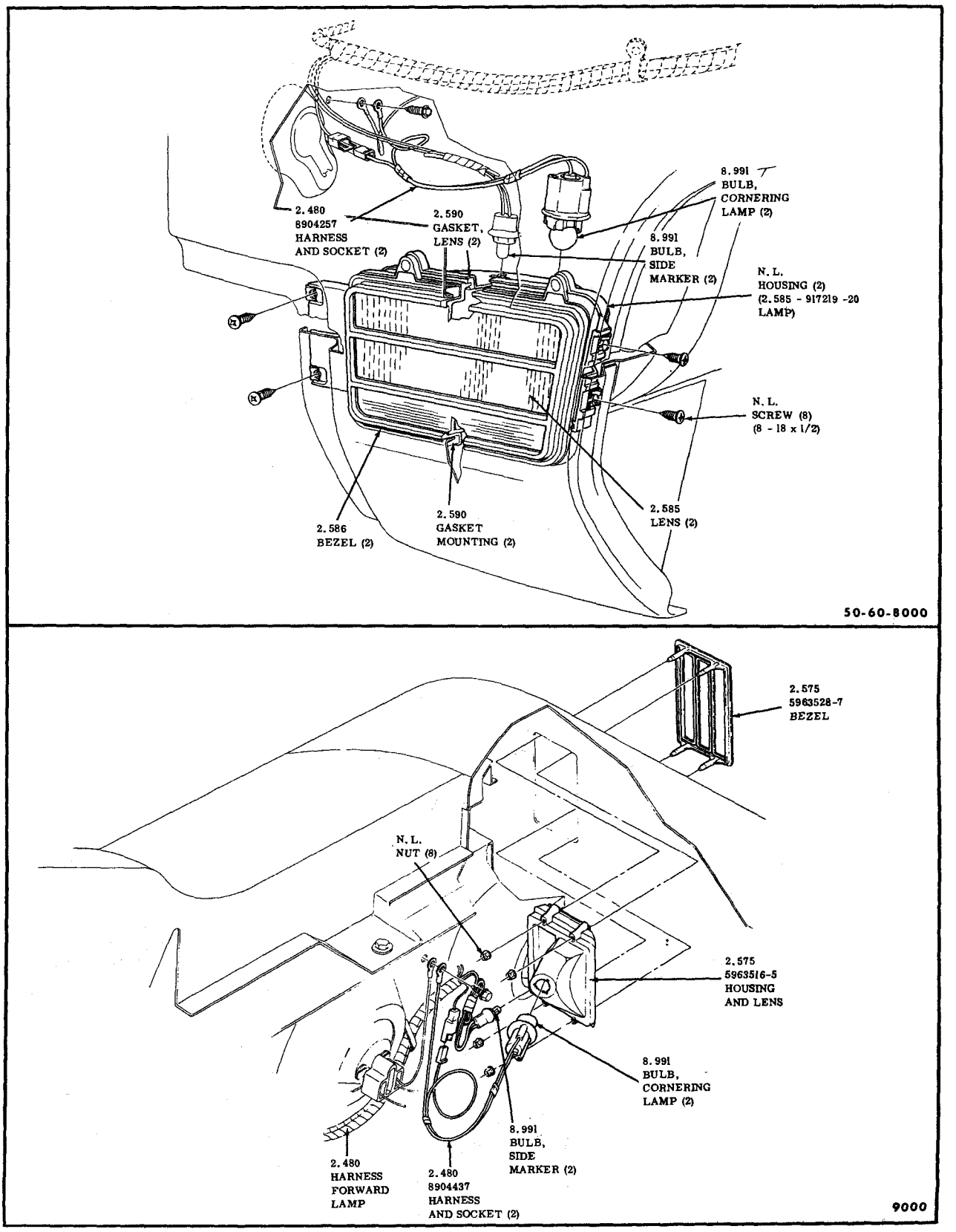

CORNERING LAMPS AND WIRING

1971-1972 50-60-80-9000

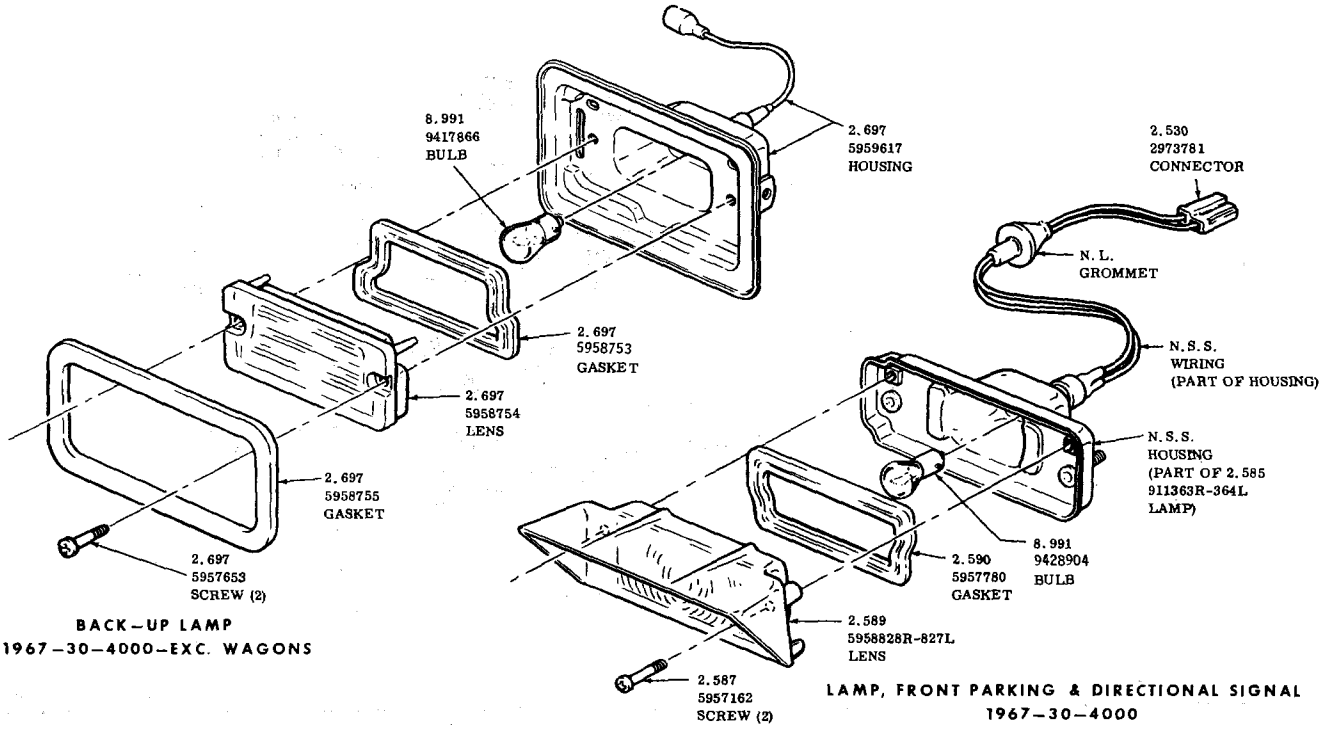

BACK-UP LAMP
1967-30-4000-EXC. WAGONS

LAMP, FRONT PARKING & DIRECTIONAL SIGNAL
1967-30-4000

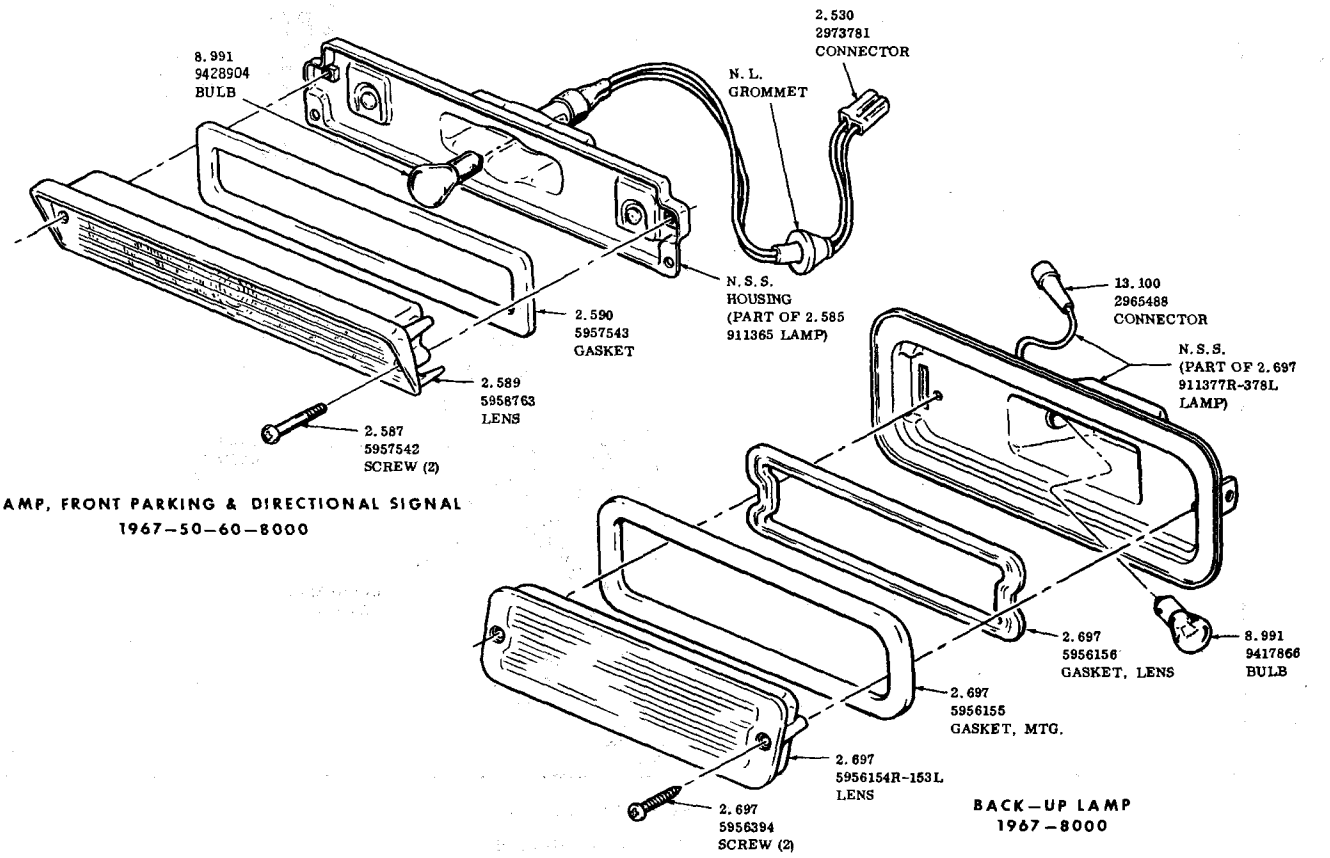

LAMP, FRONT PARKING & DIRECTIONAL SIGNAL
1967-50-60-8000

BACK-UP LAMP
1967-8000

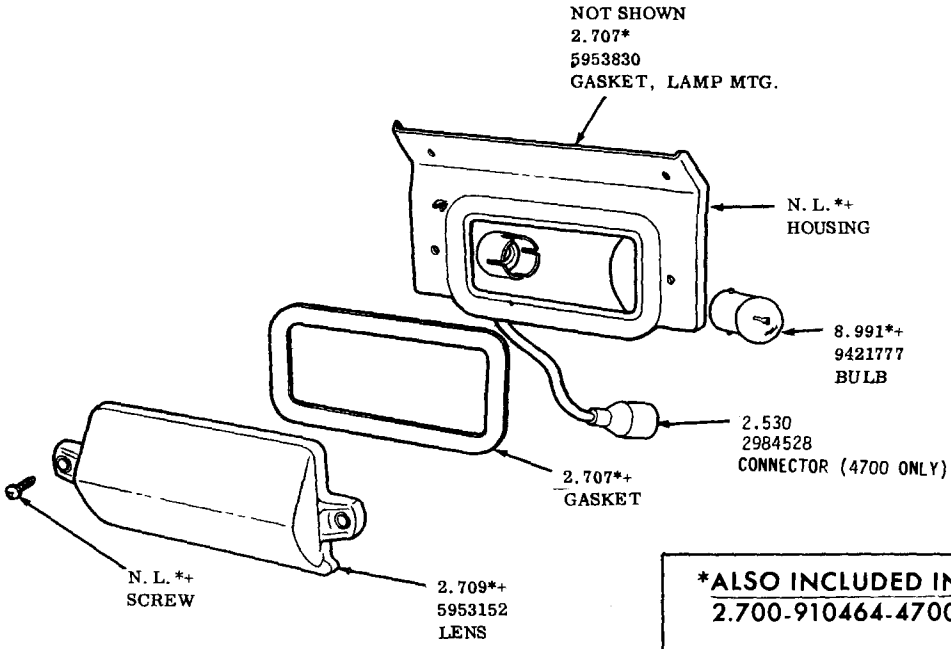

*ALSO INCLUDED IN
2.700-910464-4700

+ALSO INCLUDED IN
2.700-910463-4400—4600—4800

LICENSE LAMP
1964--4400—4600—4700—4800

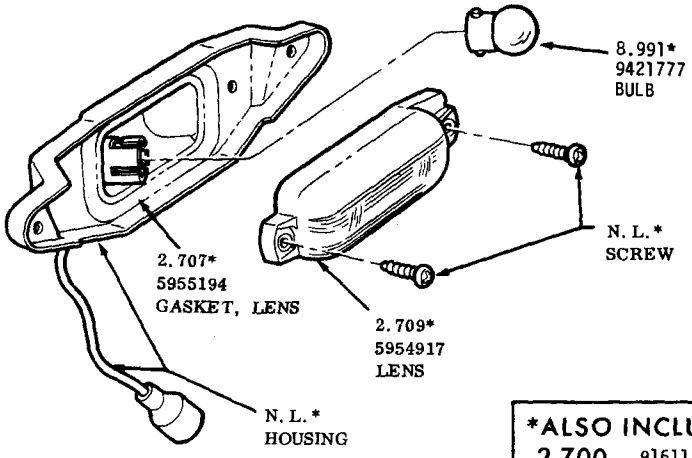

*ALSO INCLUDED IN
2.700- 916112 -LAMP

LICENSE LAMP
1964--4000—4100—4300

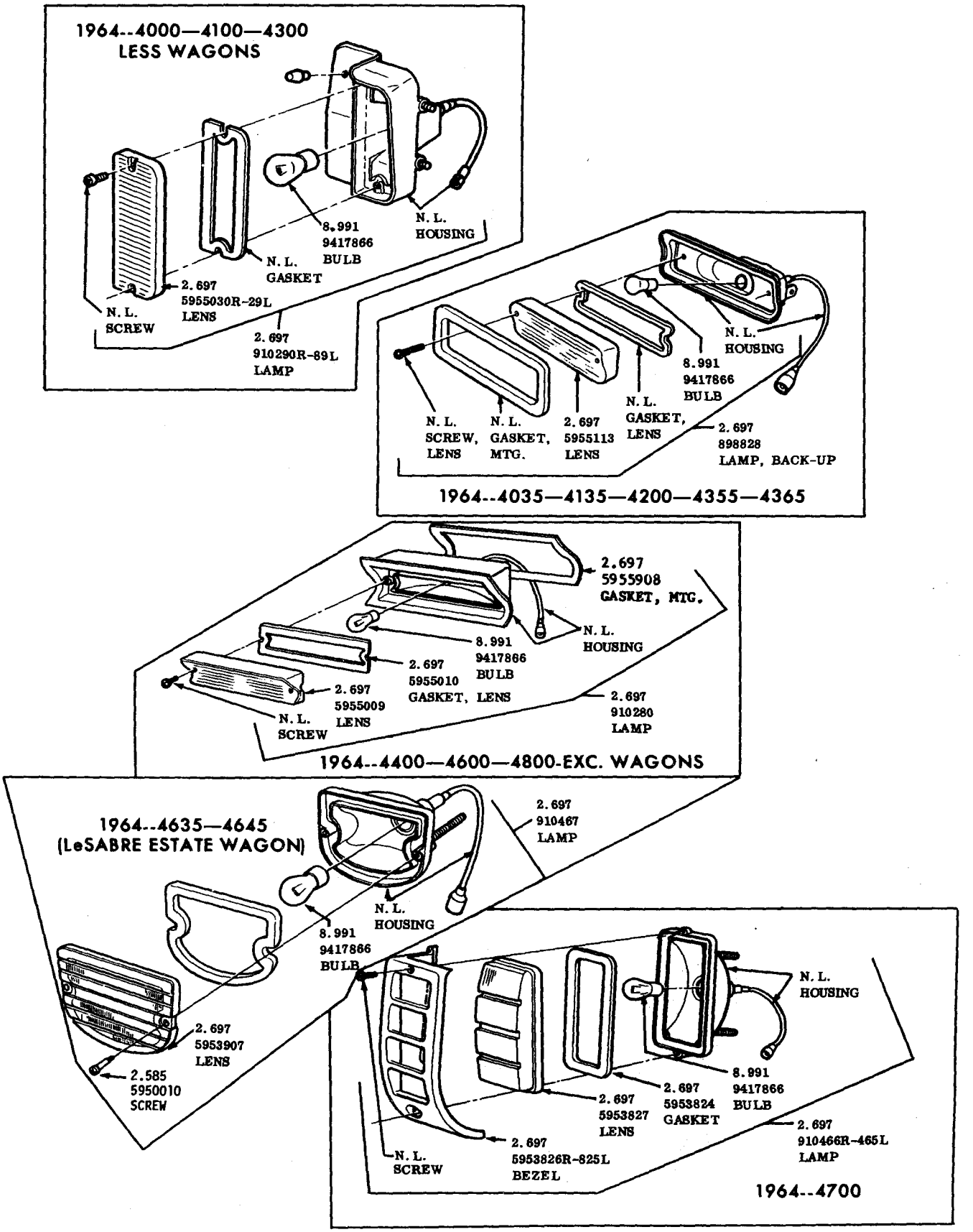

1964 BACK-UP LAMPS

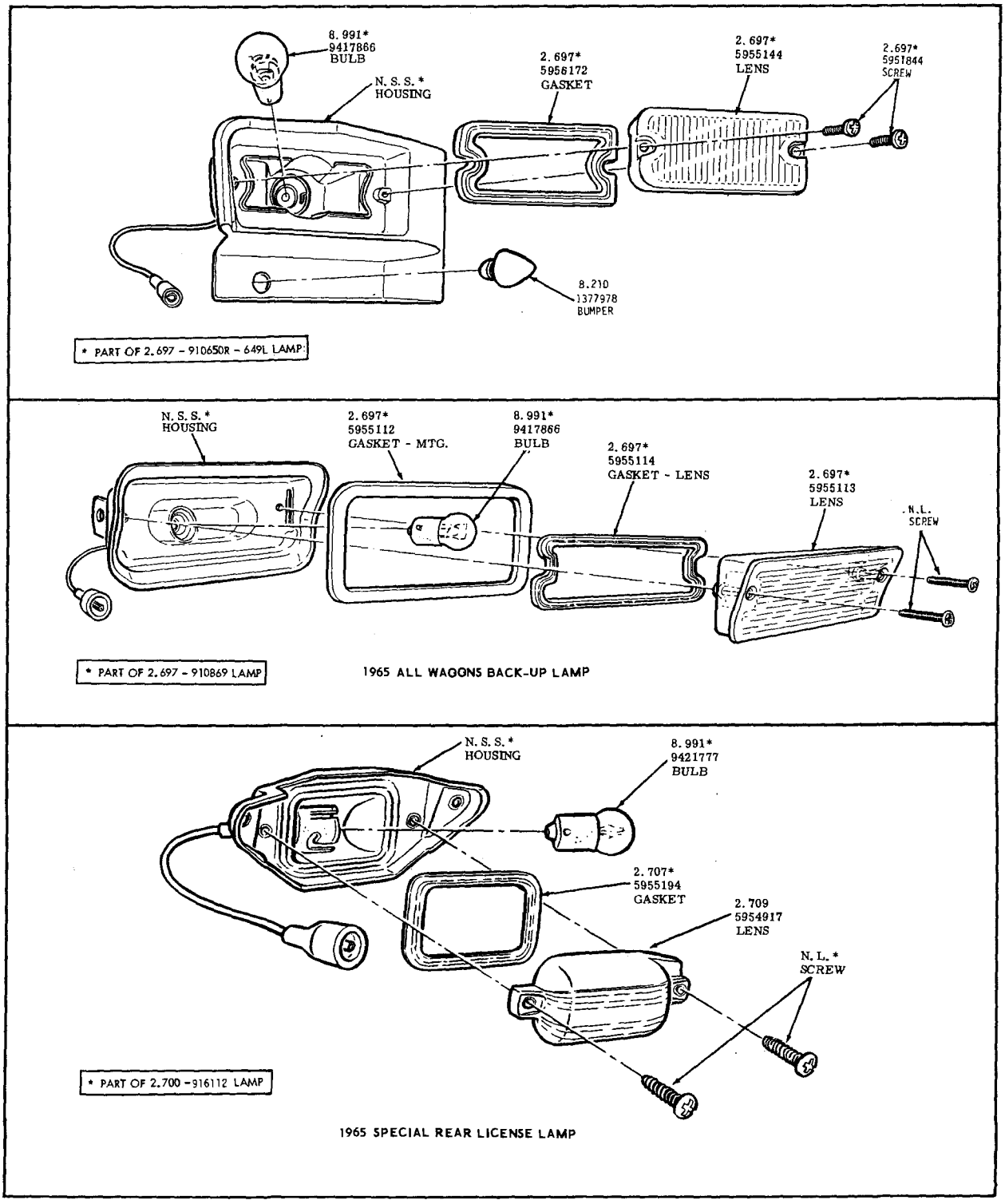

BACK-UP AND REAR LICENSE LAMP
1965-SPECIAL

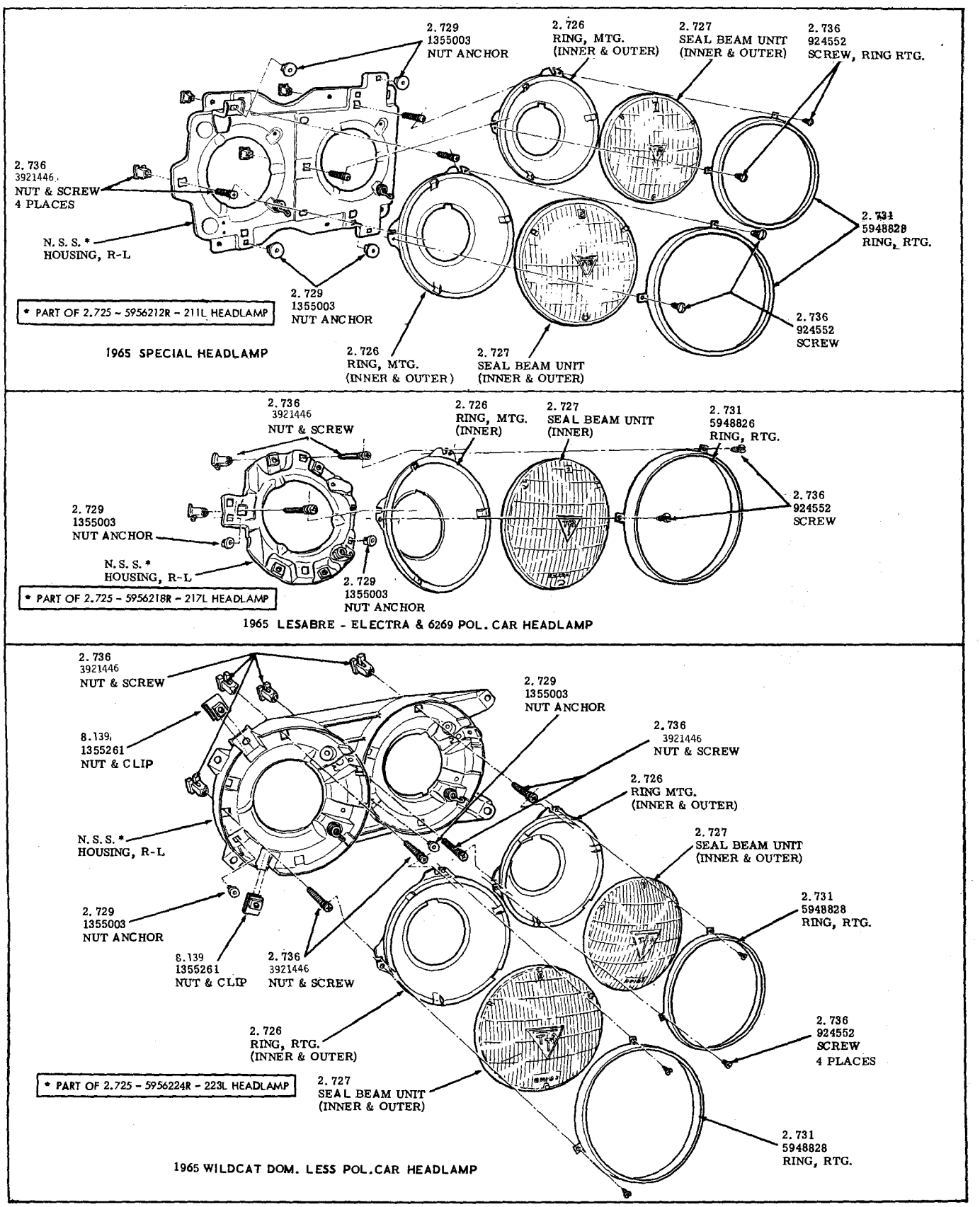

1965 HEADLAMP ASSEMBLIES

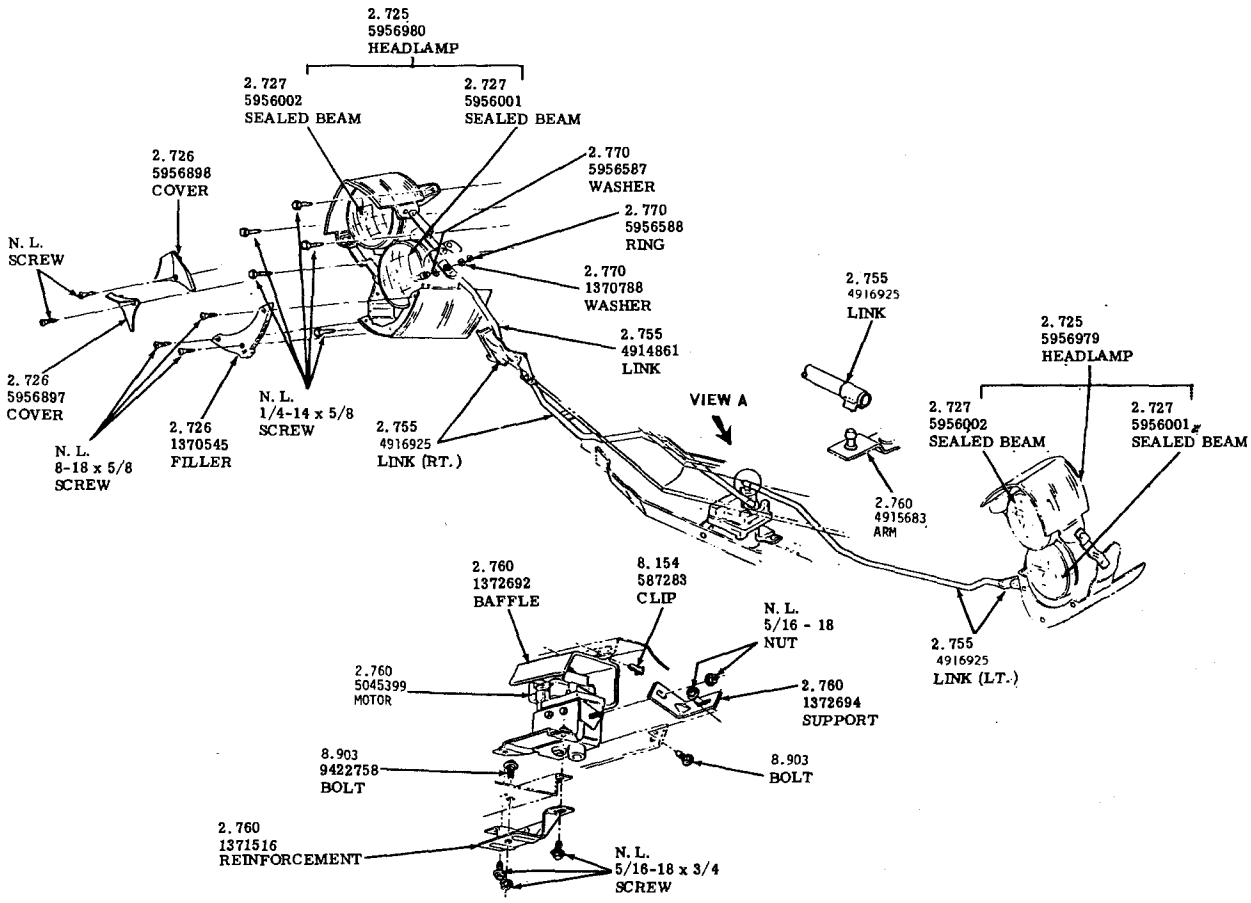

HEADLAMP VISOR MOTOR AND LINKAGE
1965 - RIVIERA

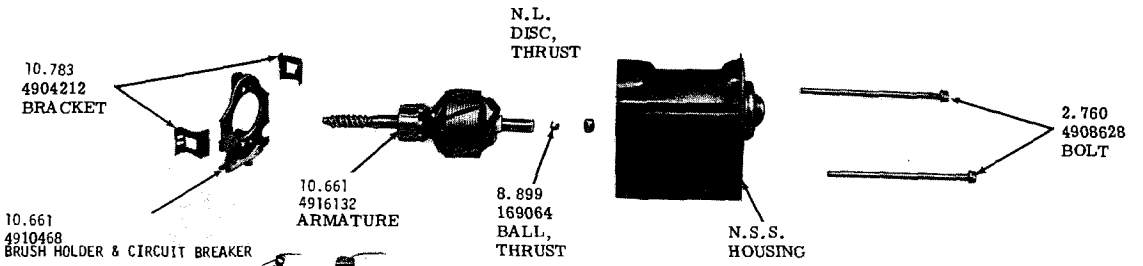

MOTOR PARTS

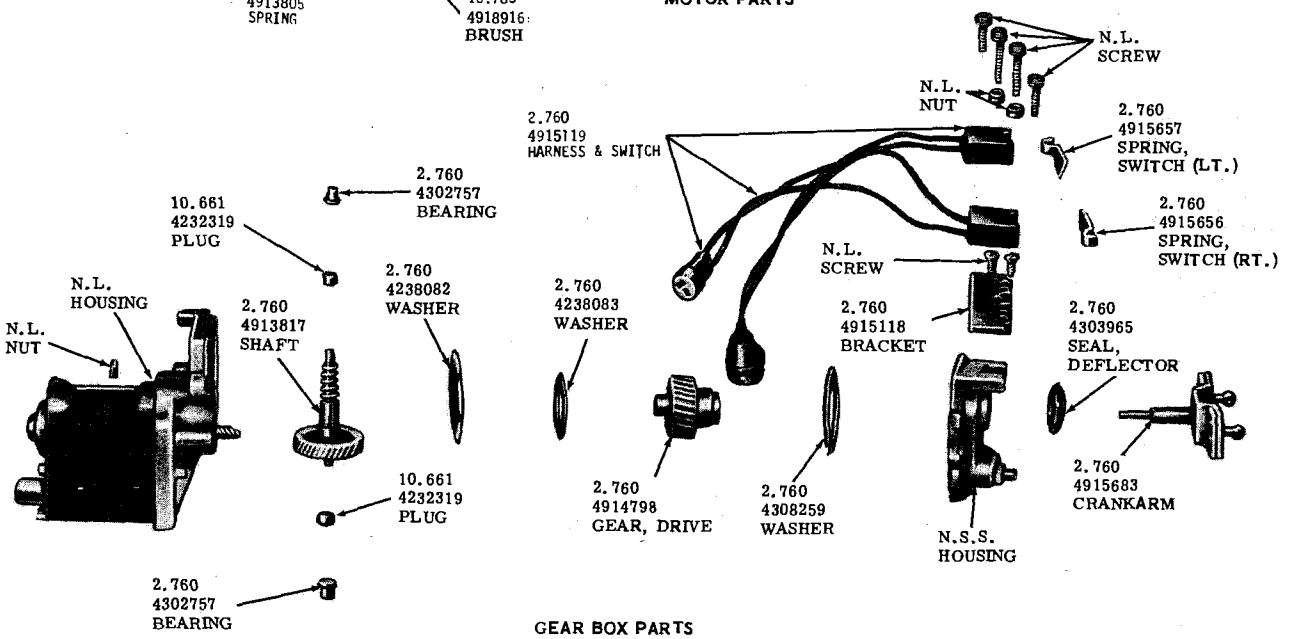

GEAR BOX PARTS
HEADLAMP VISOR ACTUATOR MOTOR
1965 RIVIERA

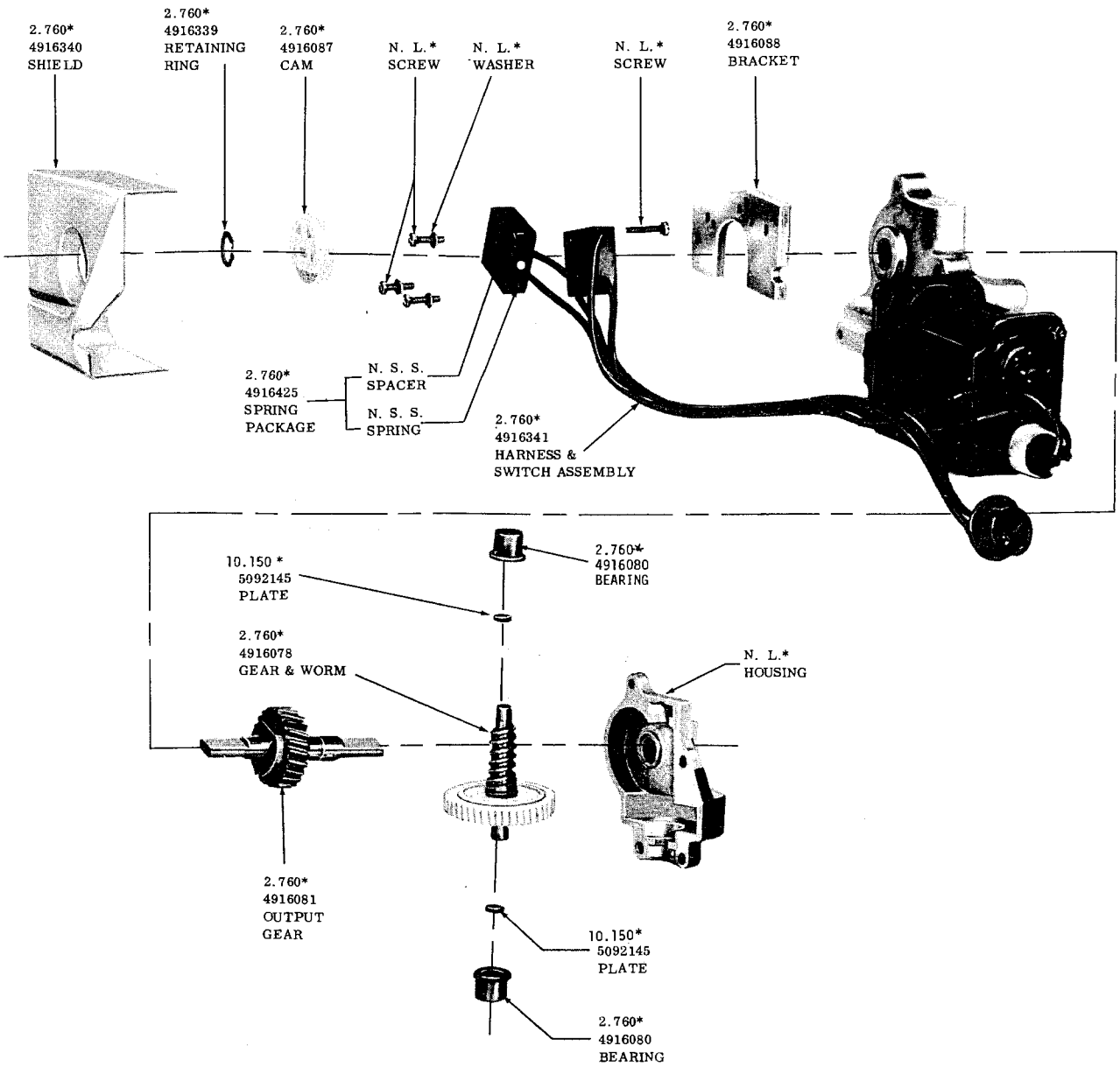

*Also Part of, 2760
5045537 Motor, Hdlp.
Actuator- Complete

HEADLAMP ACTUATOR MOTOR AND PARTS
1966—RIVIERA

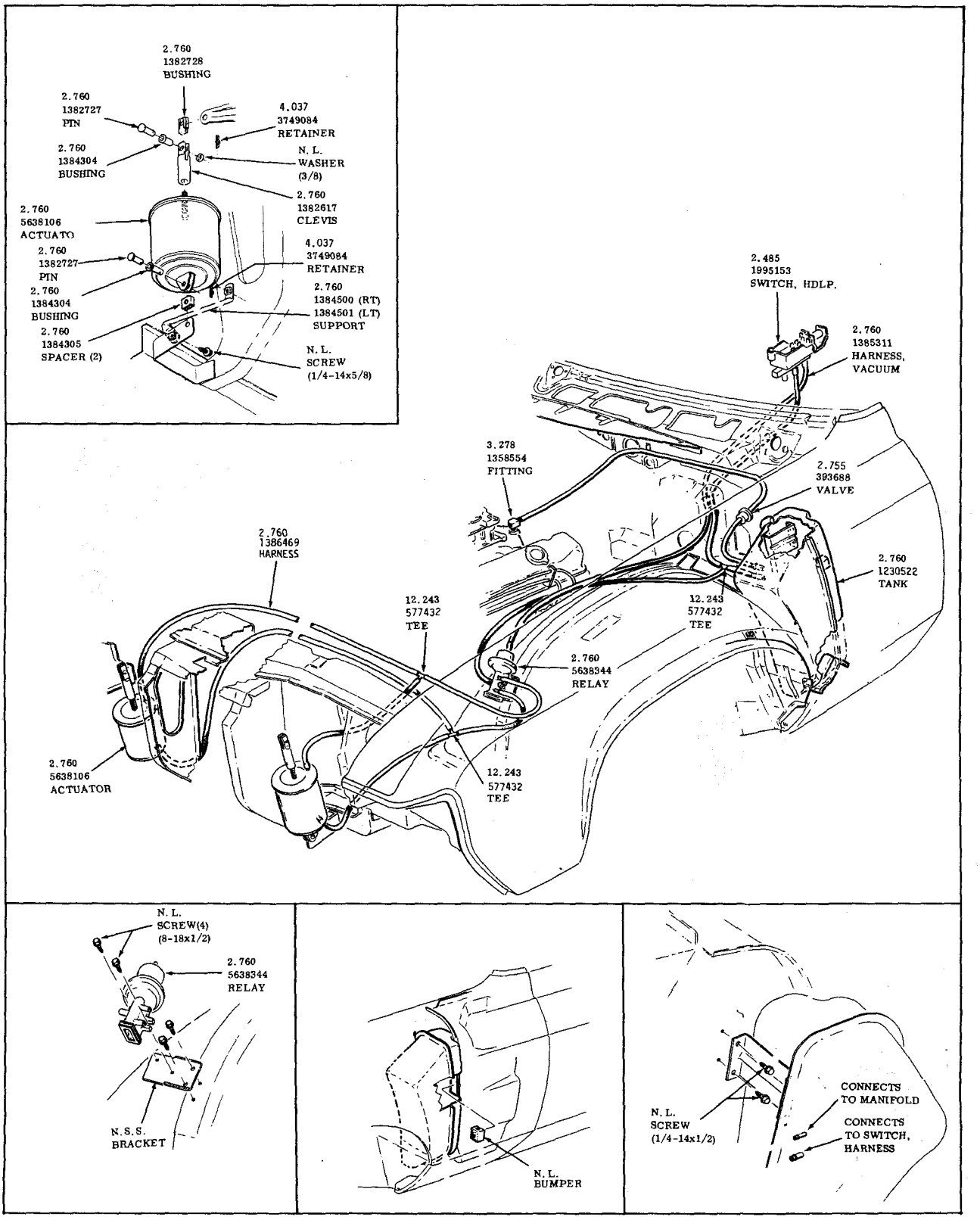

VACUUM CONTROL HEADLAMPS
1968 - RIVIERA

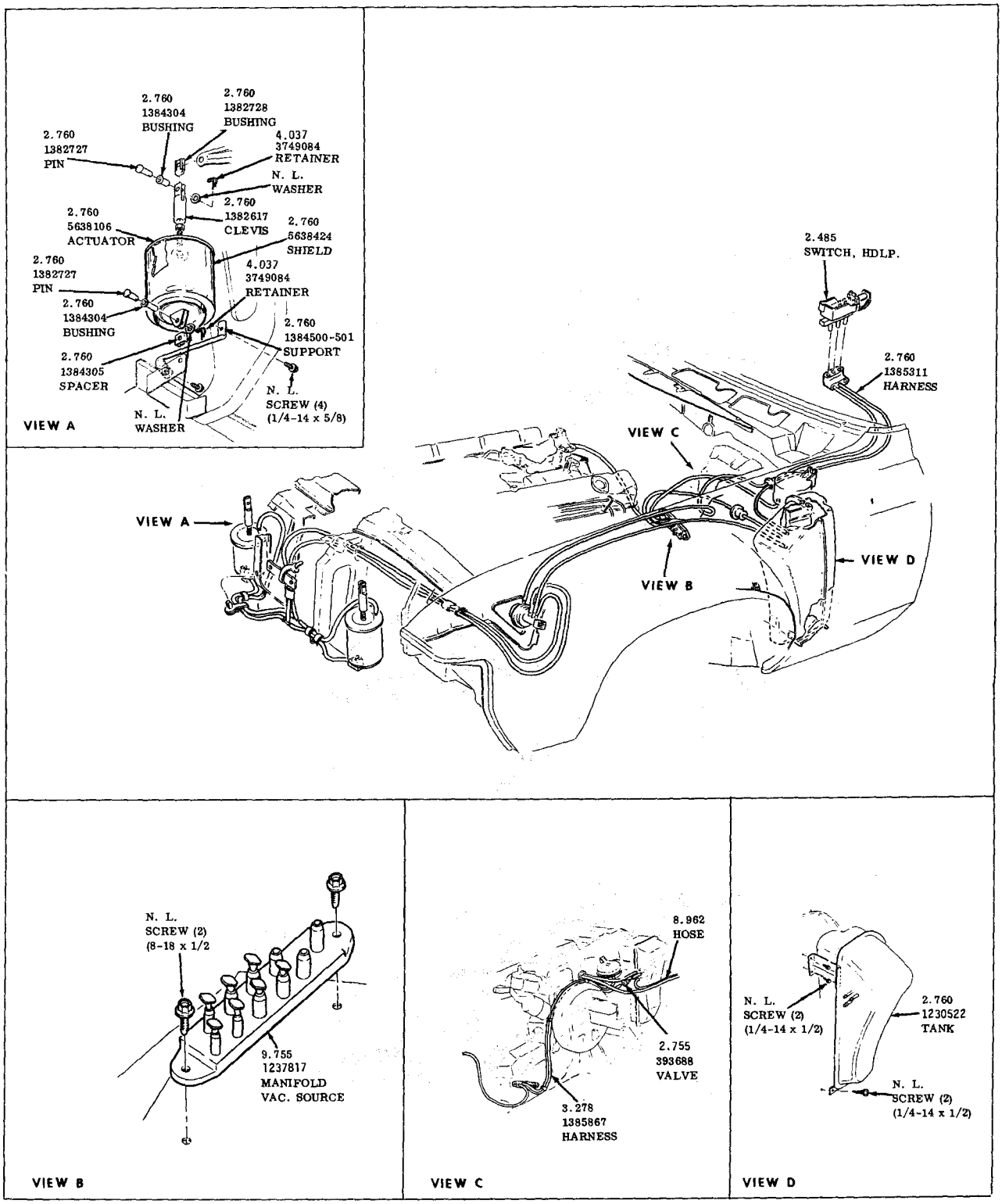

VACUUM CONTROL HEADLAMPS
1969-RIVIERA

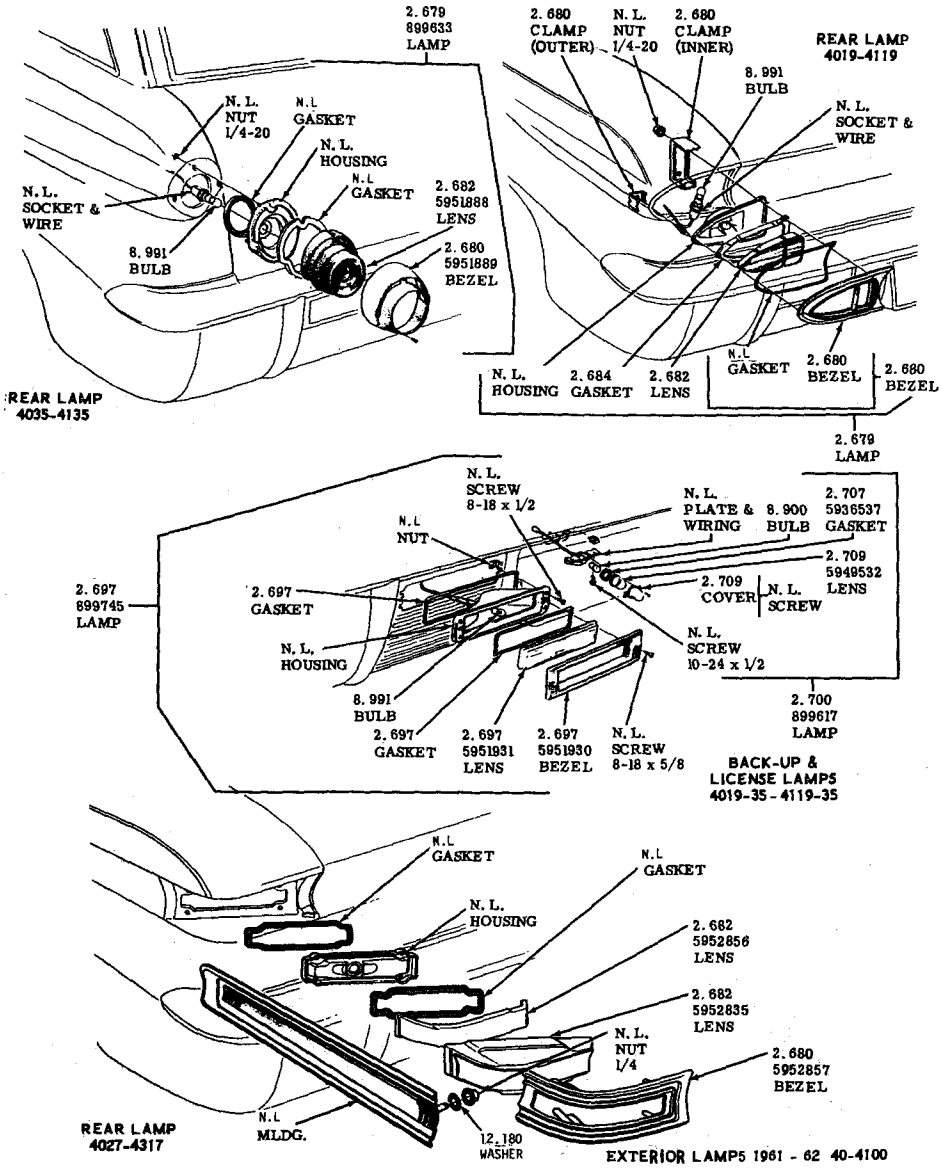
2.679
899633
LAMP
N. L.
NUT
1/4-20
N.L
GASKET
N. L.
HOUSING
N.L
GASKET
2.682
5951888
LENS
N. L.
SOCKET &
WIRE
8.991
BULB
2.680
5951889
BEZEL
REAR LAMP
4035-4135
2.680
CLAMP
(OUTER)
N. L.
NUT
1/4-20
2.680
CLAMP
(INNER)
REAR LAMP
4019-4119
8.991
BULB
N. L.
SOCKET &
WIRE
N. L.
HOUSING
2.684
GASKET
2.682
LENS
N.L
GASKET
2.680
BEZEL
2.680
BEZEL
2.679
LAMP
N. L.
SCREW
8-18 x 1/2
N.L
NUT
N. L.
PLATE &
WIRING
8.900
BULB
2.707
5936537
GASKET
2.709
5949532
LENS
2.697
899745
LAMP
2.697
GASKET
2.709
COVER
N. L.
SCREW
N. L.
HOUSING
N. L.
SCREW
10-24 x 1/2
8.991
BULB
2.697
GASKET
2.697
5951931
LENS
2.697
5951930
BEZEL
N. L.
SCREW
8-18 x 5/8
2.700
899617
LAMP
BACK-UP &
LICENSE LAMPS
4019-35 - 4119-35
N.L
GASKET
N.L
GASKET
N. L.
HOUSING
2.682
5952856
LENS
2.682
5952835
LENS
N. L.
NUT
1/4
2.680
5952857
BEZEL
REAR LAMP
4027-4317
N.L
MLDG.
12.180
WASHER
EXTERIOR LAMPS 1961 - 62 40-4100

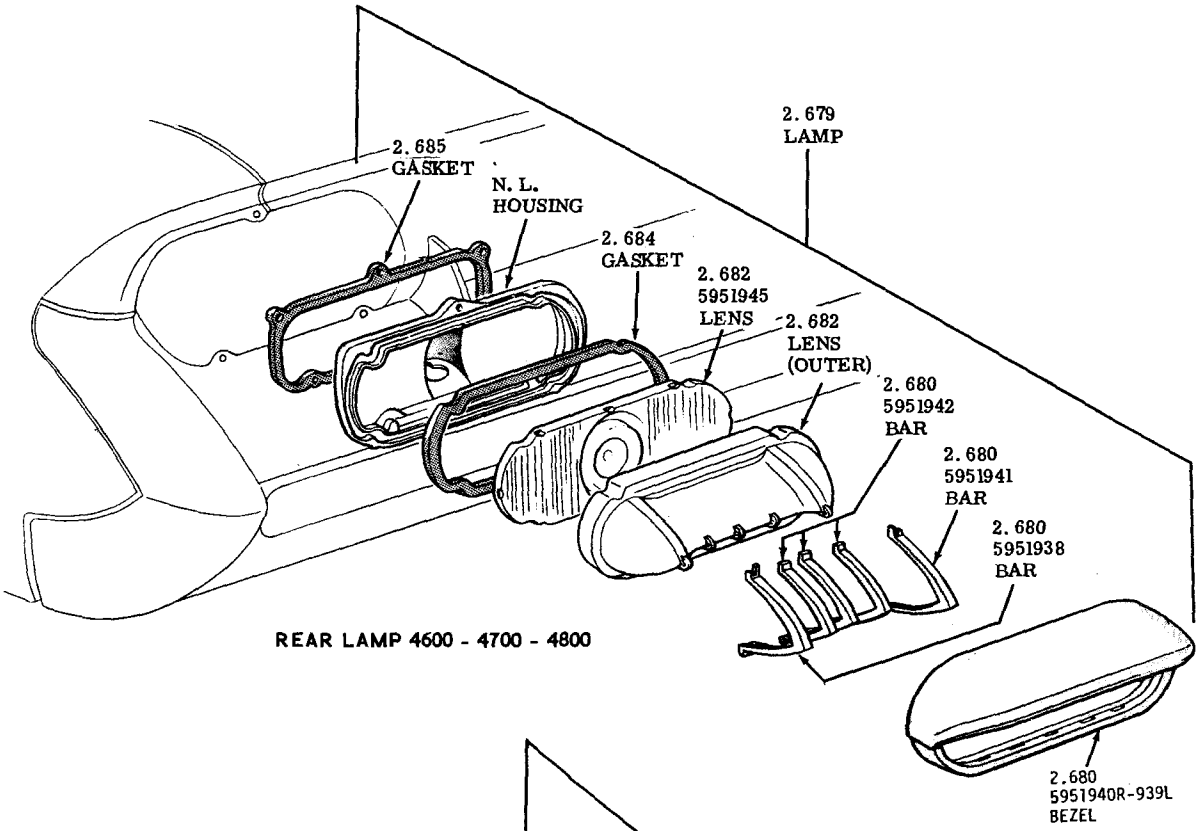

REAR LAMP 4600 - 4700 - 4800

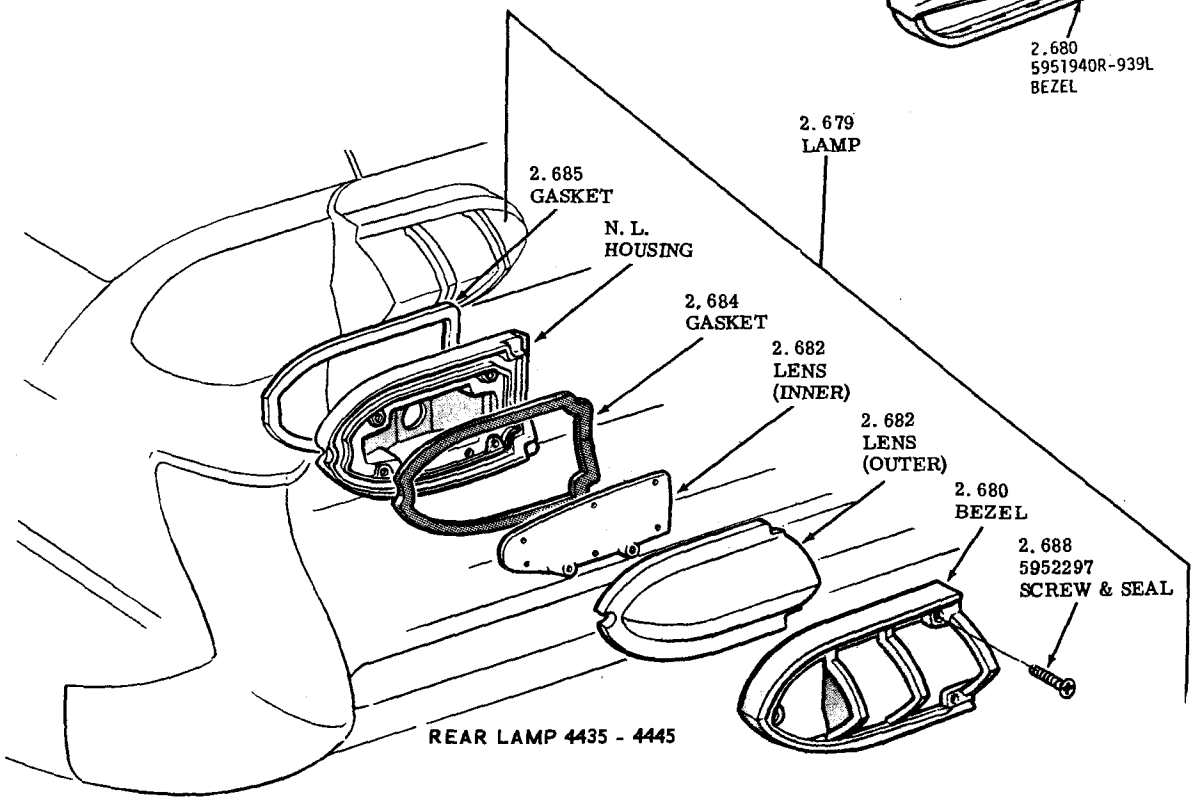

REAR LAMP 4435 - 4445

REAR LAMPS 1961 - 44 - 46 - 47 - 4800

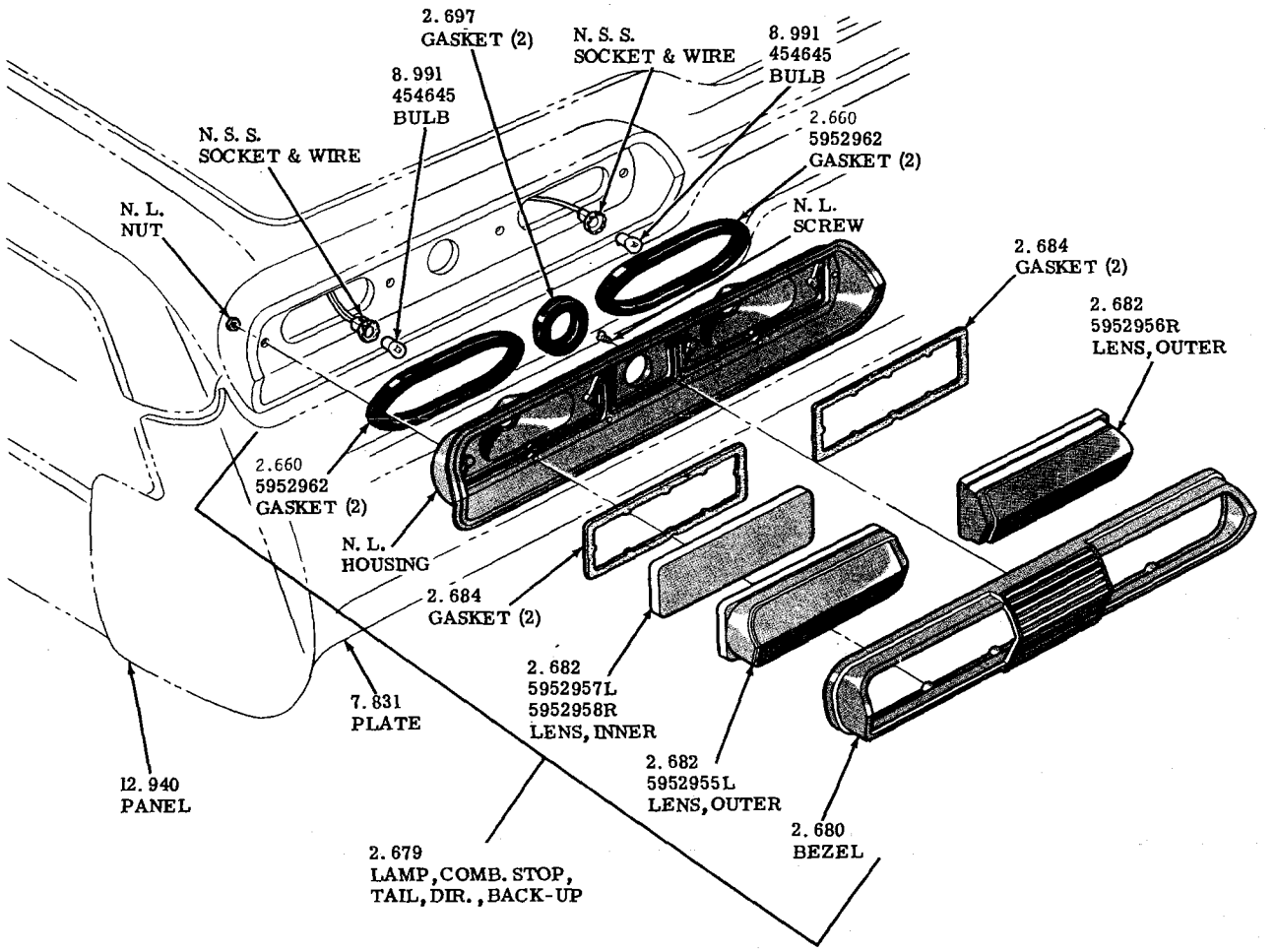

REAR STOP, TAIL, DIRECTIONAL SIGNAL AND BACK-UP LAMP
1962 - 44 - 46 - 4800

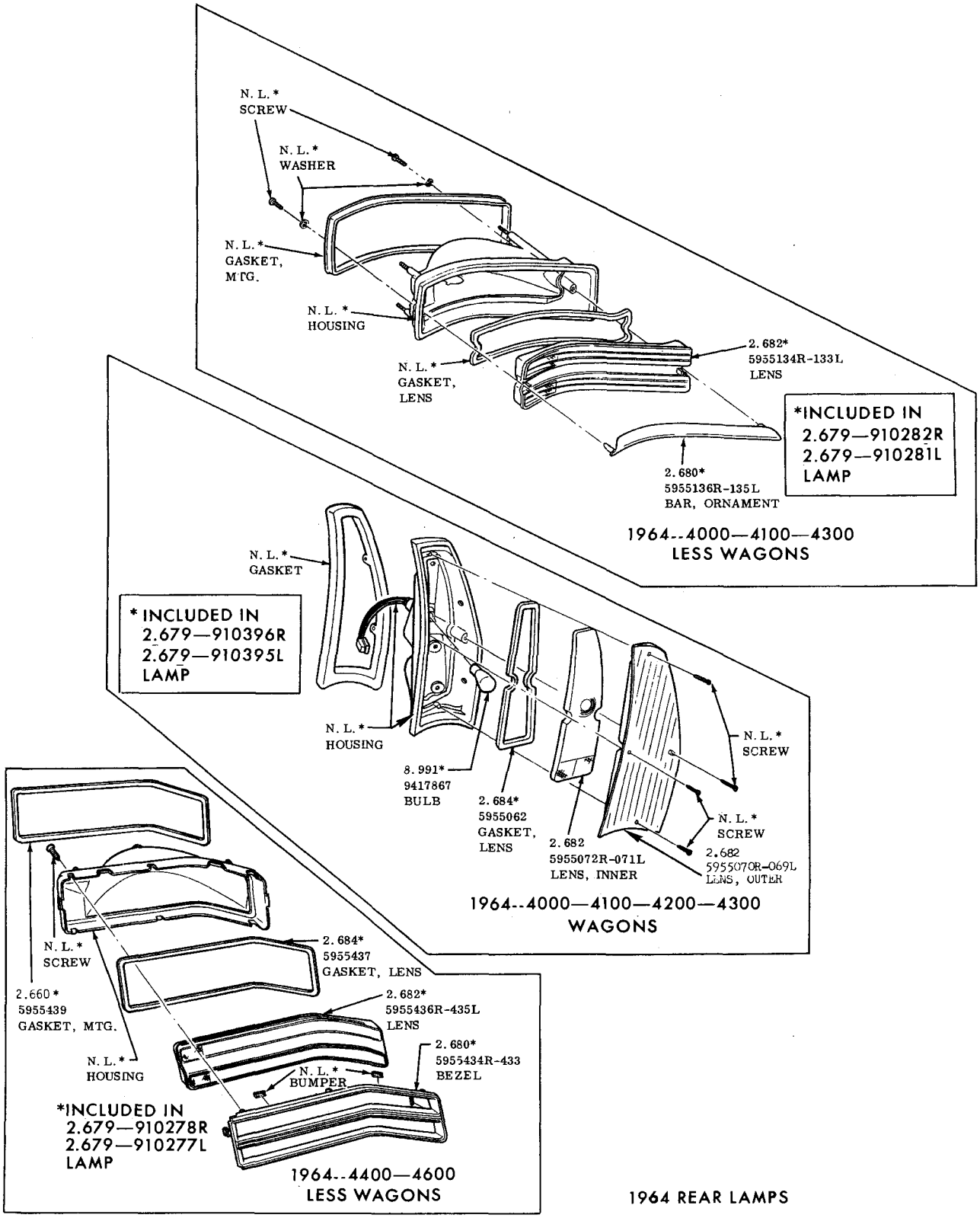

1964 REAR LAMPS

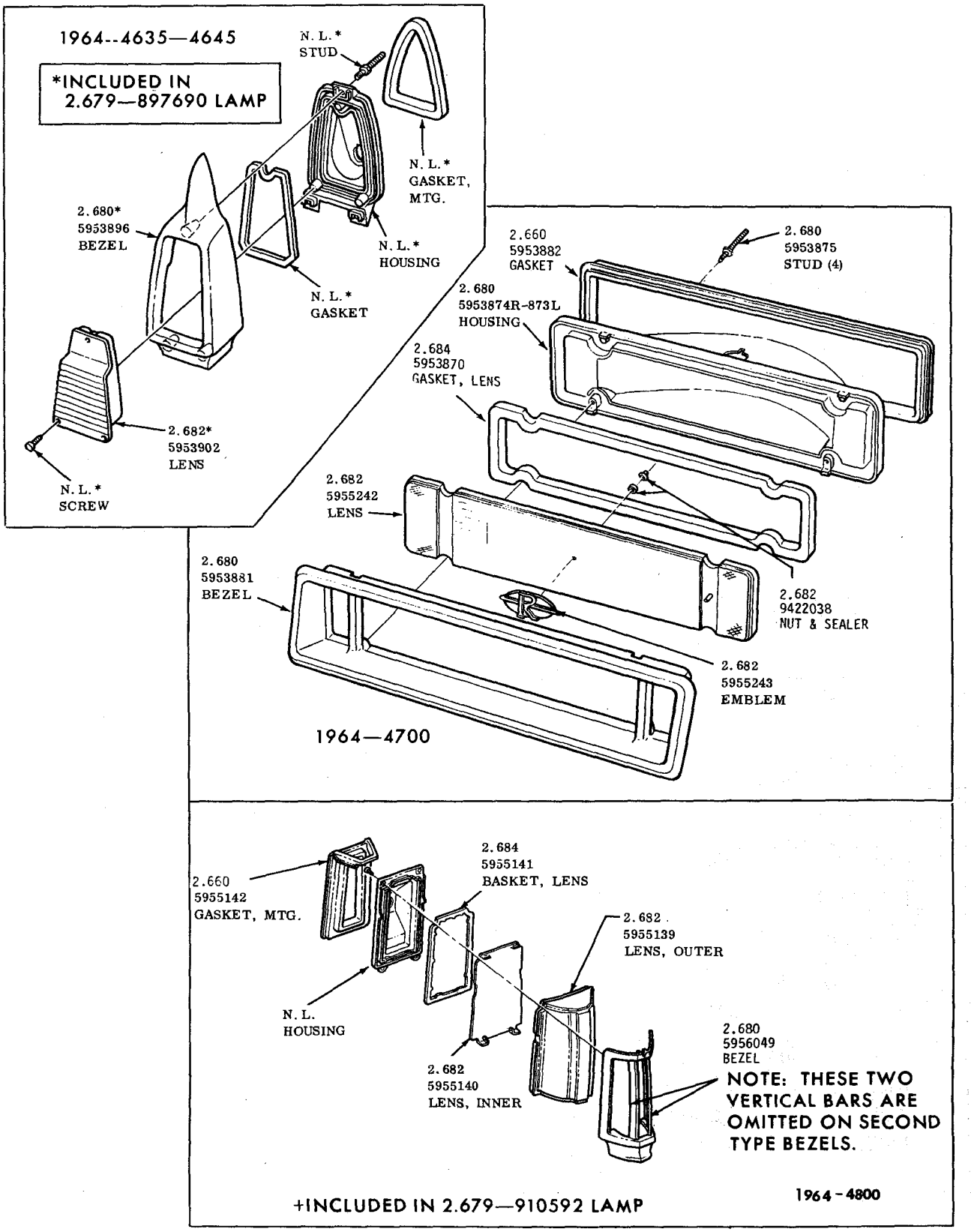

1964 REAR LAMPS

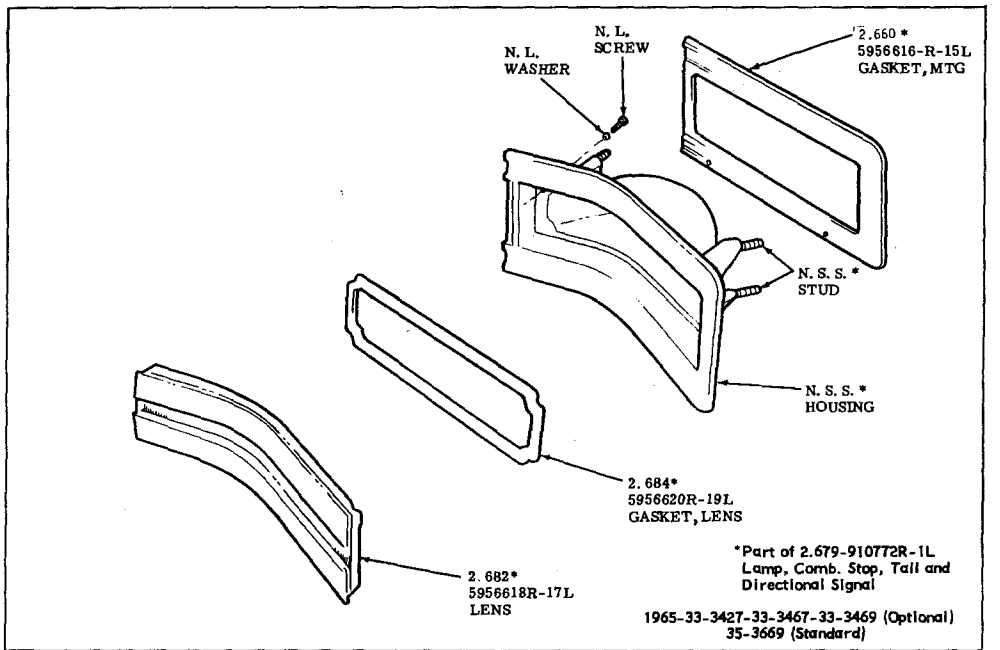

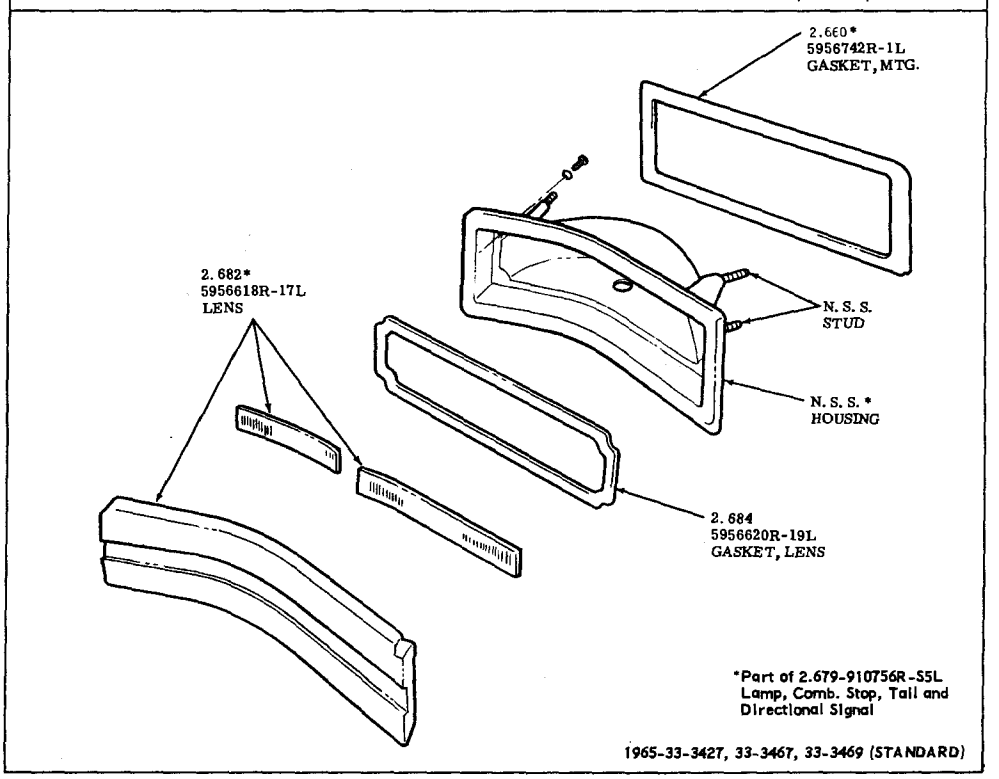

1965 COMBINATION STOP, TAIL AND
DIRECTIONAL SIGNAL LAMPS

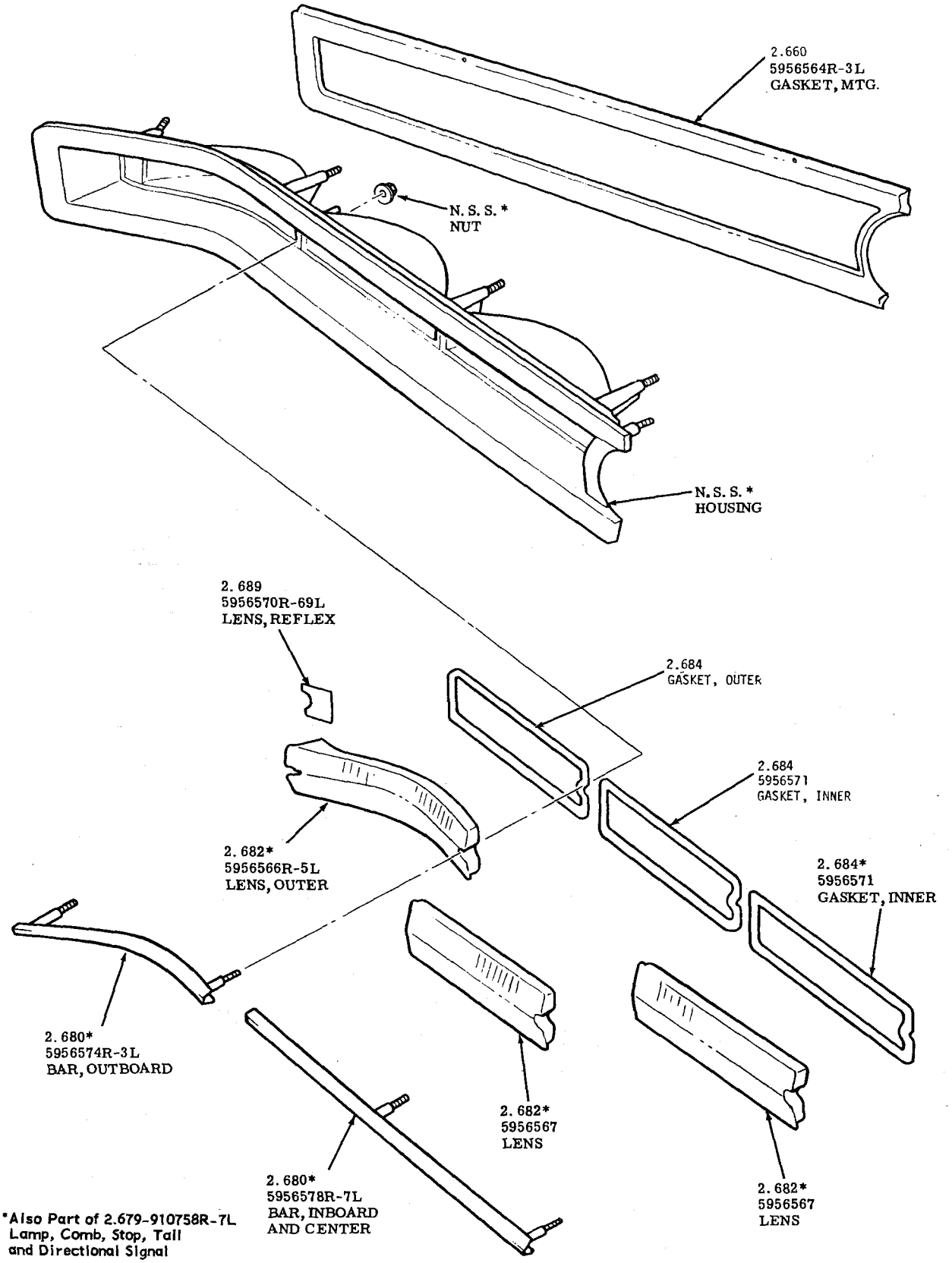

*Also Part of 2.679-910758R-7L Lamp, Comb, Stop, Tail and Directional Signal

COMBINATION STOP, TAIL AND DIRECTIONAL SIGNAL LAMP
1965-SKYLARK

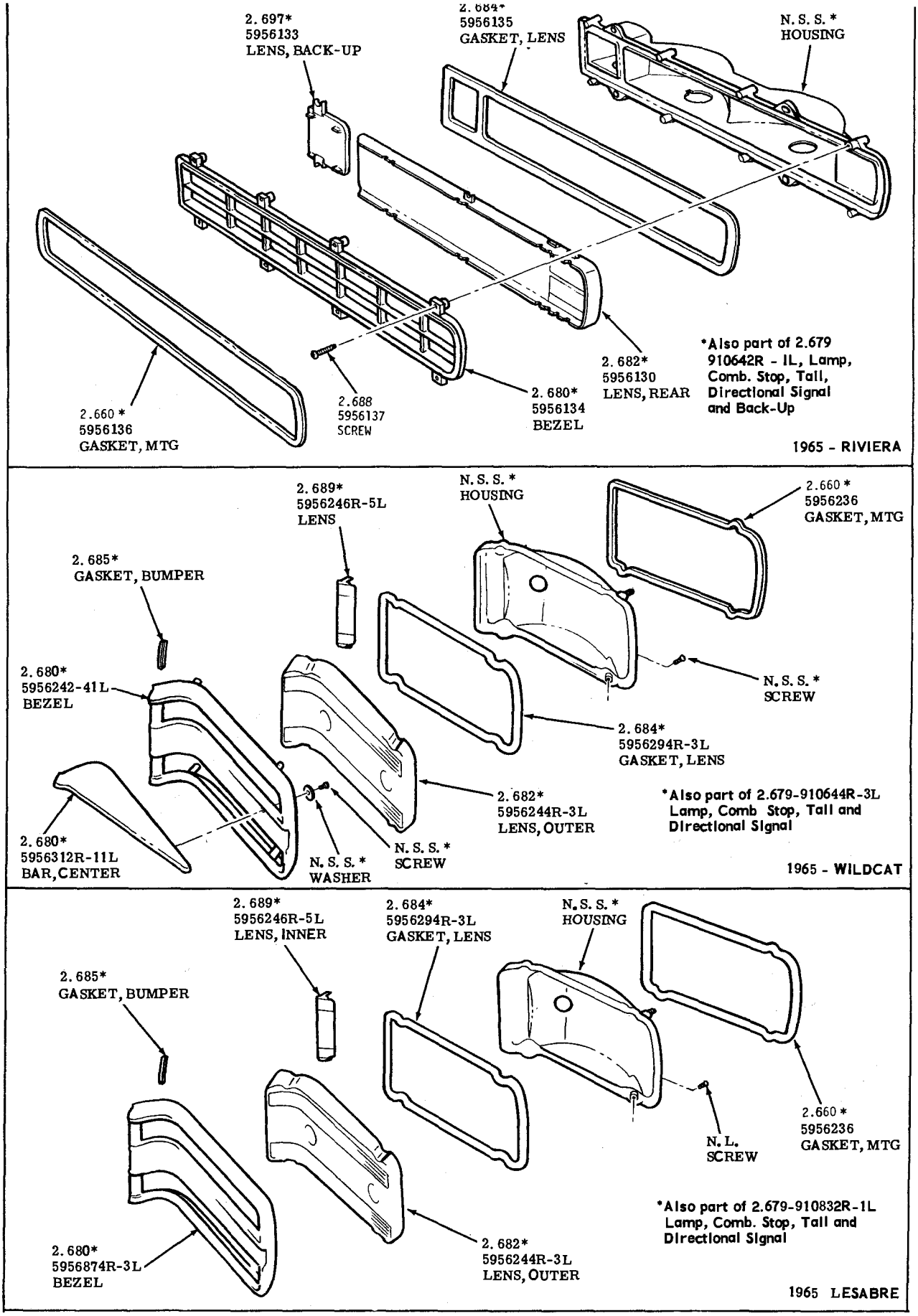

COMBINATION STOP, TAIL AND DIRECTIONAL SIGNAL LAMP 1965-LESABRE-WILDCAT-RIVIER.

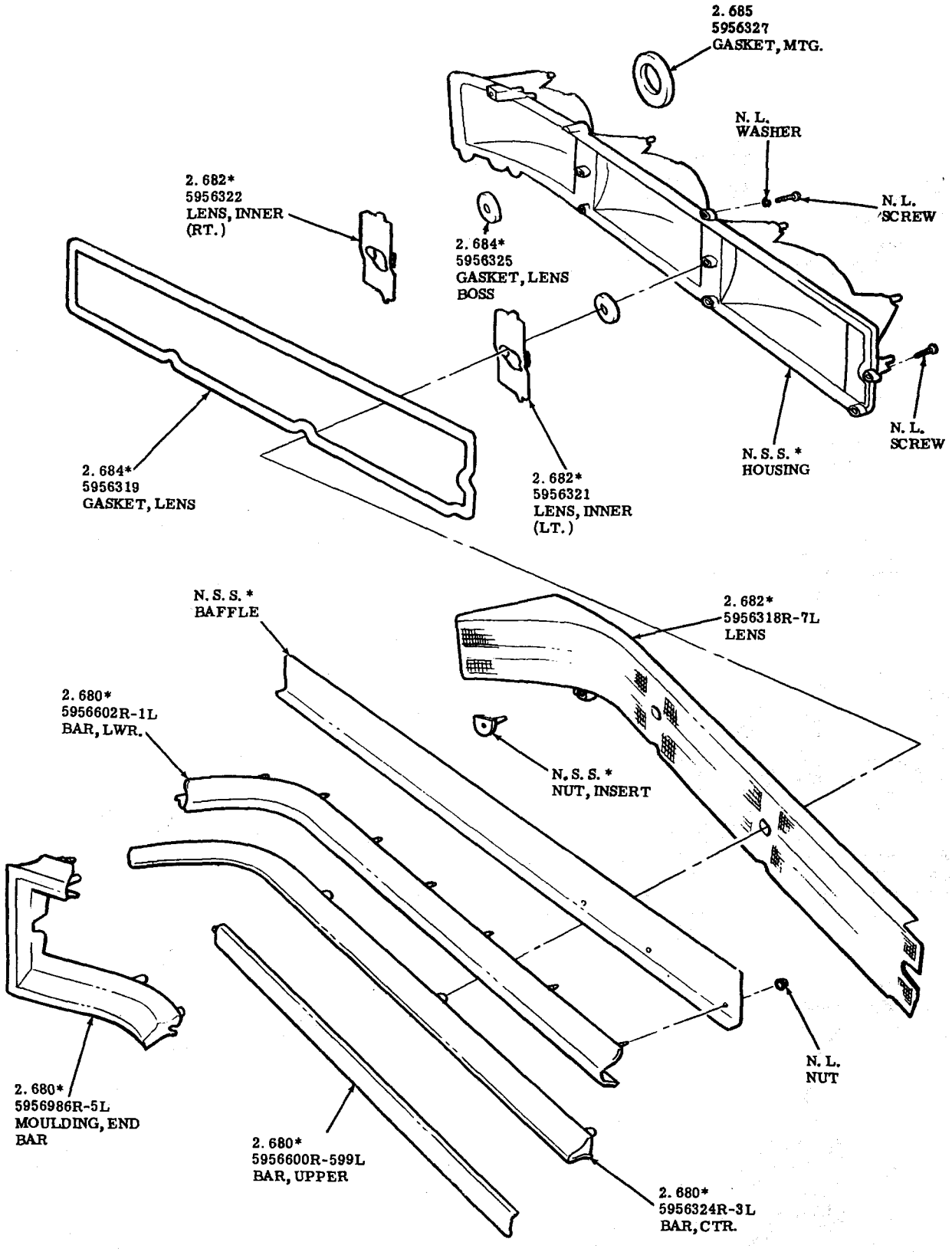

*Part of 2.679-910646R-5L
Lamp, Comb. Stop, Tail and
Directional Signal

Combination Stop, Tail and Directional Signal Lamp
1965-ELECTRA 225

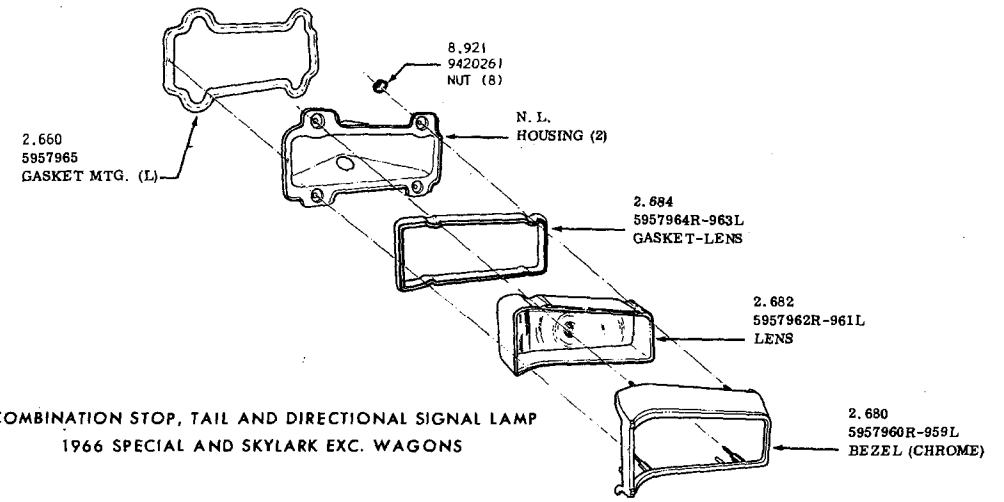

COMBINATION STOP, TAIL AND DIRECTIONAL SIGNAL LAMP
1966 SPECIAL AND SKYLARK EXC. WAGONS

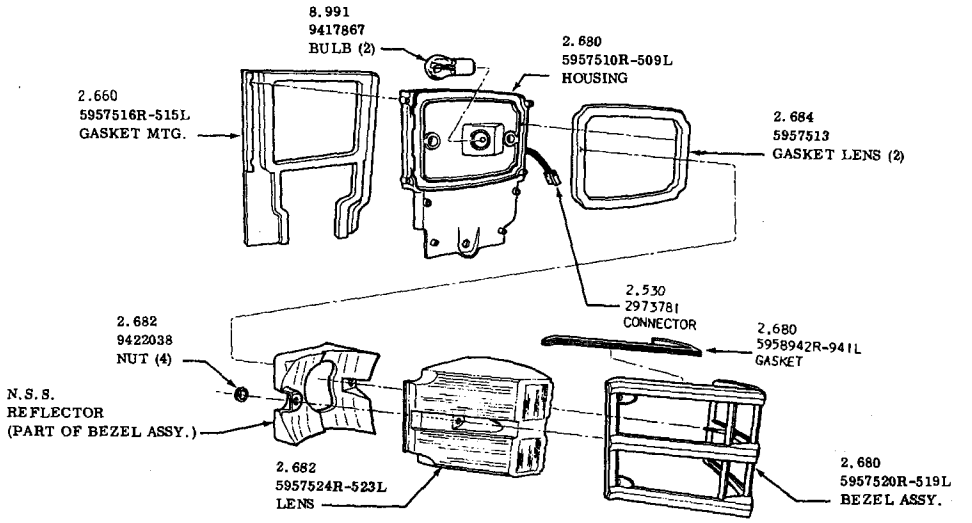

COMBINATION STOP, TAIL AND DIRECTIONAL SIGNAL LAMP
1966 SPECIAL AND SKYLARK WAGONS

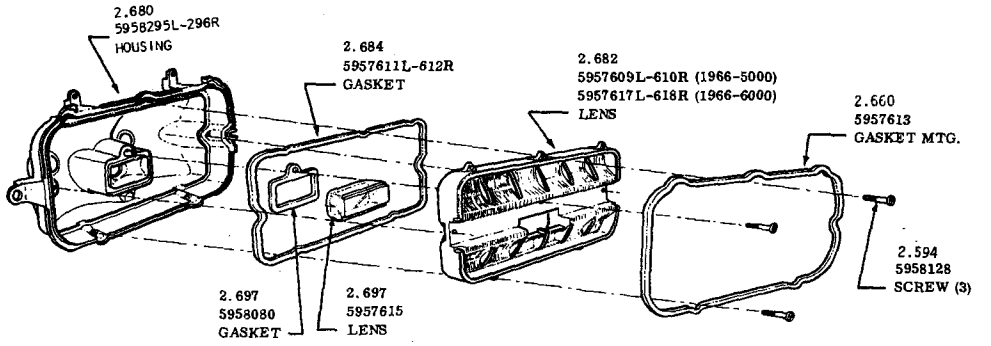

COMBINATION REAR STOP, TAIL AND DIRECTIONAL SIGNAL LAMP
1966 - 5000 - 6000

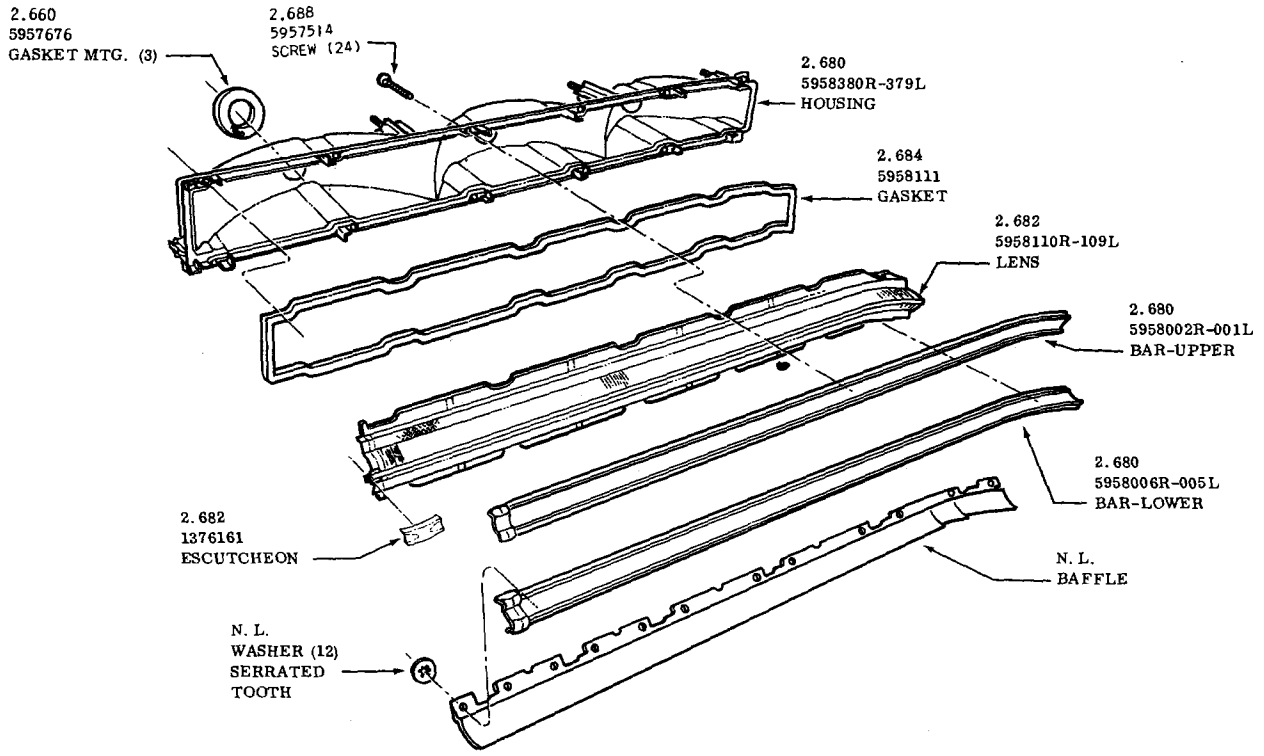

COMBINATION TAIL, DIRECTIONAL SIGNAL AND BACK-UP LAMP

1966 ELECTRA 225

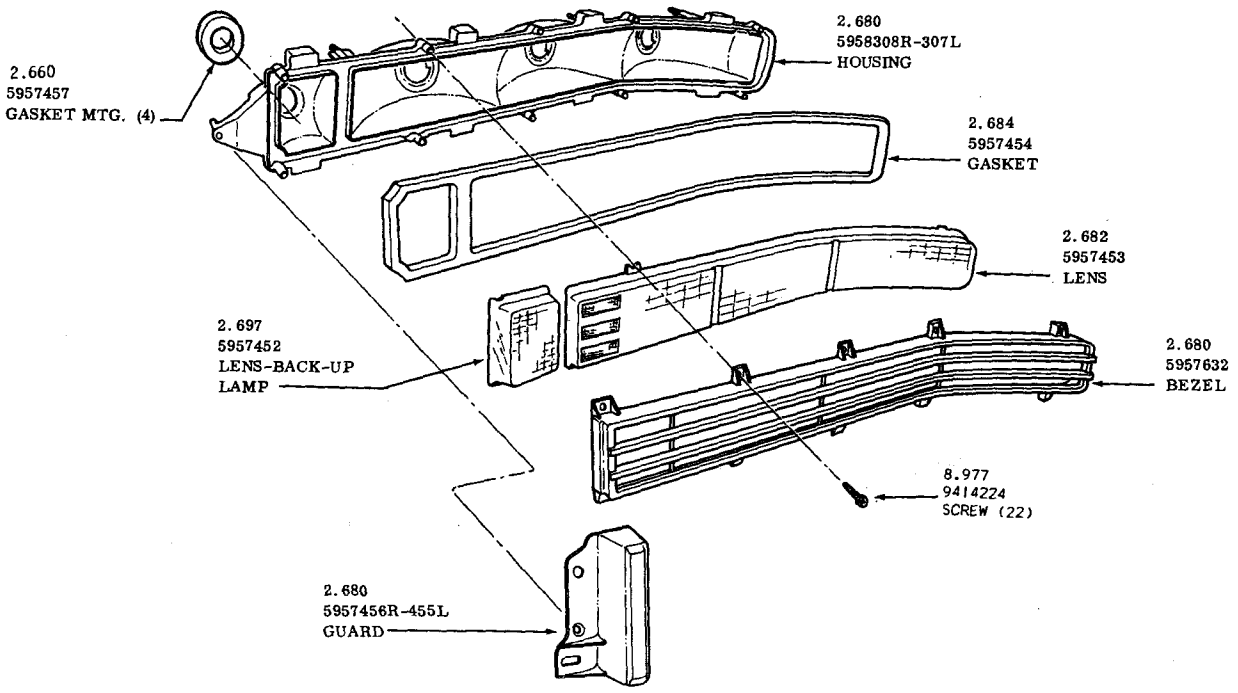

COMBINATION TAIL, DIRECTIONAL SIGNAL AND BACK-UP LAMP

1966 RIVIERA

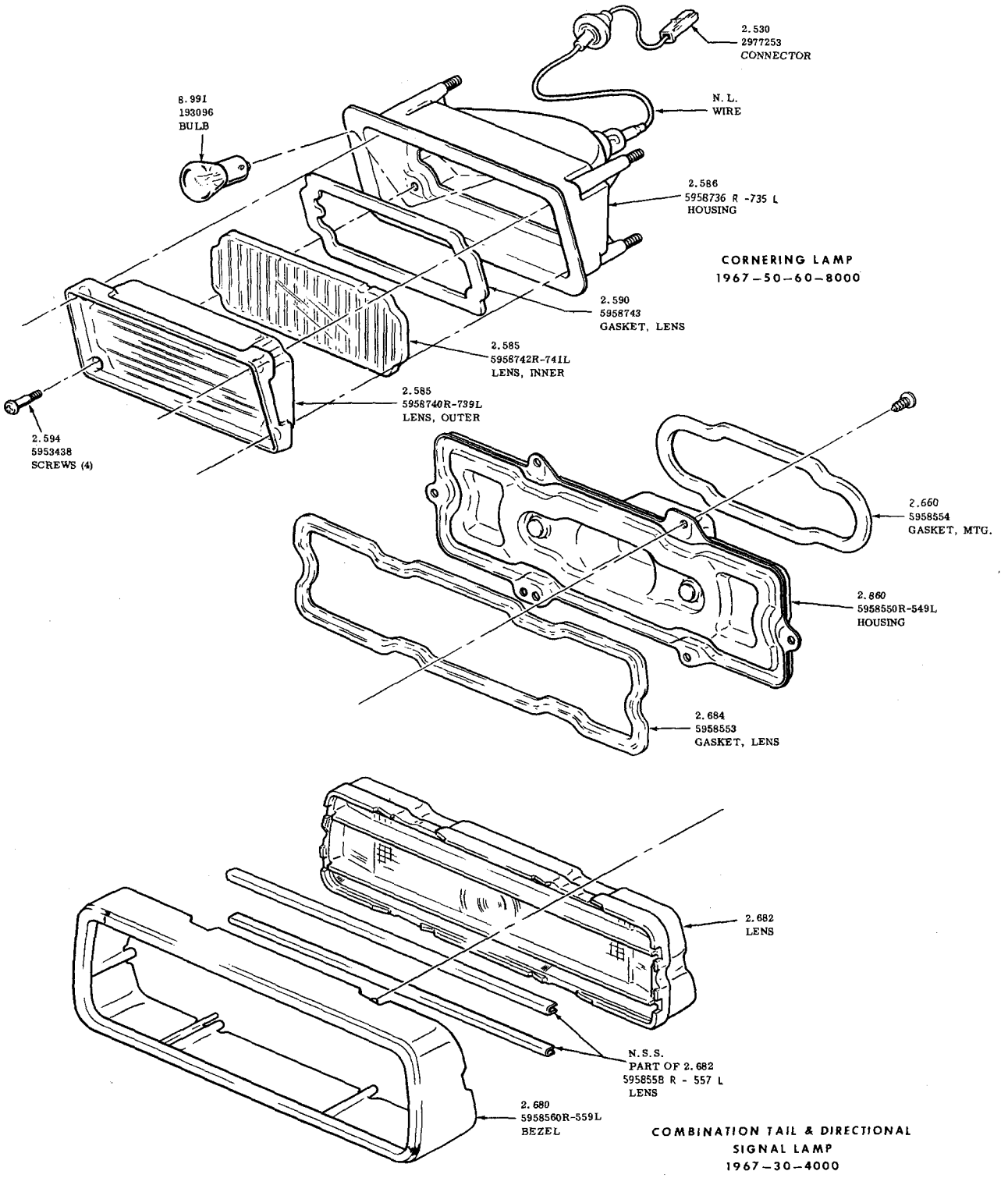
2.530
2977253
CONNECTOR
N.L.
WIRE
8.991
193096
BULB
2.586
5958736 R -735 L
HOUSING
CORNERING LAMP
1967-50-60-8000
2.590
5958743
GASKET, LENS
2.585
5958742R-741L
LENS, INNER
2.585
5958740R-739L
LENS, OUTER
2.594
5953438
SCREWS (4)
2.660
5958554
GASKET, MTG.
2.860
5958550R-549L
HOUSING
2.684
5958553
GASKET, LENS
2.682
LENS
N.S.S.
PART OF 2.682
5958558 R - 557 L
LENS
2.680
5958560R-559L
BEZEL
COMBINATION TAIL & DIRECTIONAL
SIGNAL LAMP
1967-30-4000

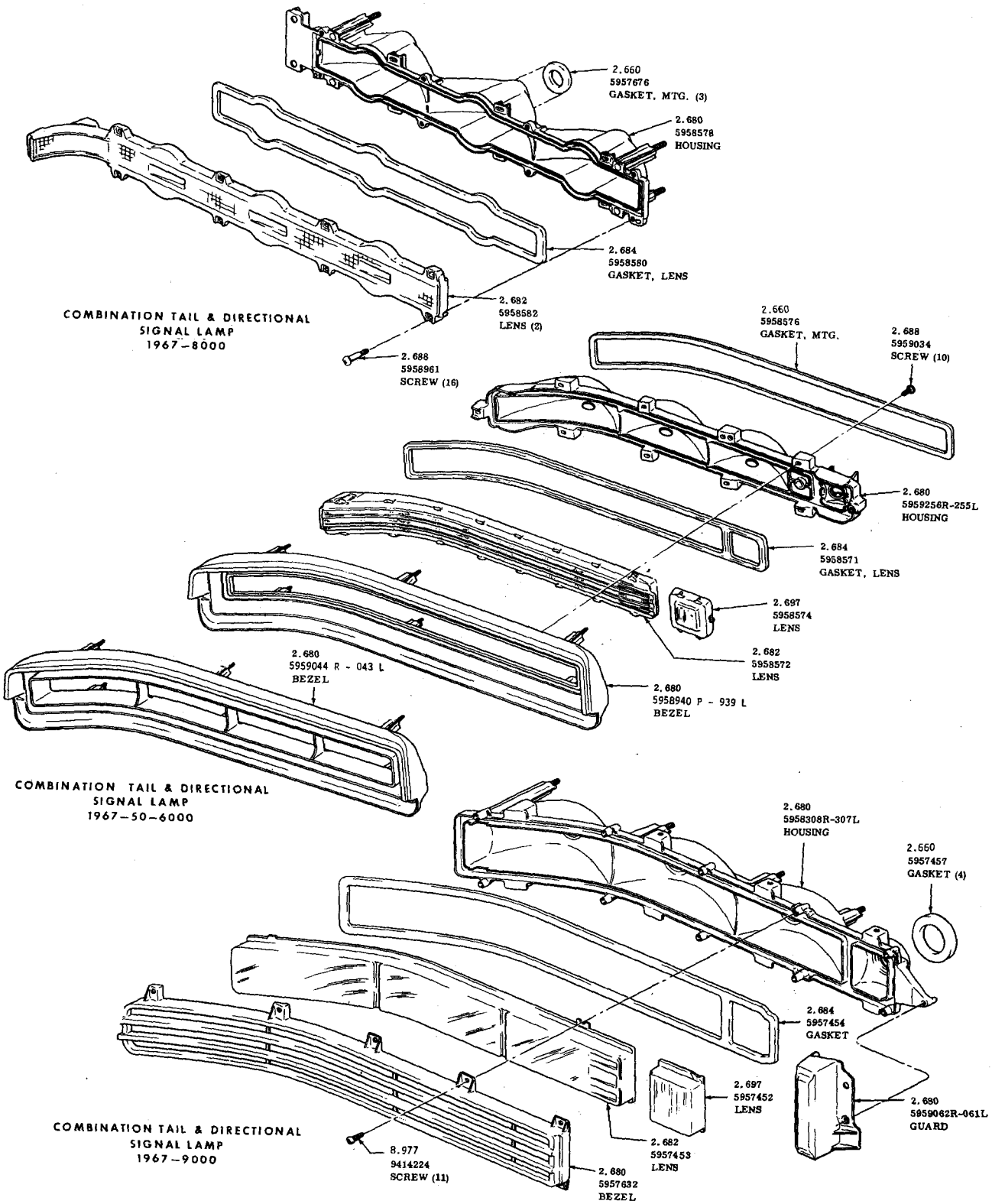
2.660
5957676
GASKET, MTG. (3)
2.680
5958578
HOUSING
2.684
5958580
GASKET, LENS
2.682
5958582
LENS (2)
2.688
5958961
SCREW (16)
COMBINATION TAIL & DIRECTIONAL
SIGNAL LAMP
1967-8000
2.660
5958576
GASKET, MTG.
2.688
5959034
SCREW (10)
2.680
5959256R-255L
HOUSING
2.684
5958571
GASKET, LENS
2.697
5958574
LENS
2.682
5958572
LENS
2.680
5959044 R - 043 L
BEZEL
2.680
5958940 P - 939 L
BEZEL
COMBINATION TAIL & DIRECTIONAL
SIGNAL LAMP
1967-50-6000
2.680
5958308R-307L
HOUSING
2.660
5957457
GASKET (4)
2.684
5957454
GASKET
2.697
5957452
LENS
2.680
5959062R-061L
GUARD
2.682
5957453
LENS
8.977
9414224
SCREW (11)
2.680
5957632
BEZEL
COMBINATION TAIL & DIRECTIONAL
SIGNAL LAMP
1967-9000

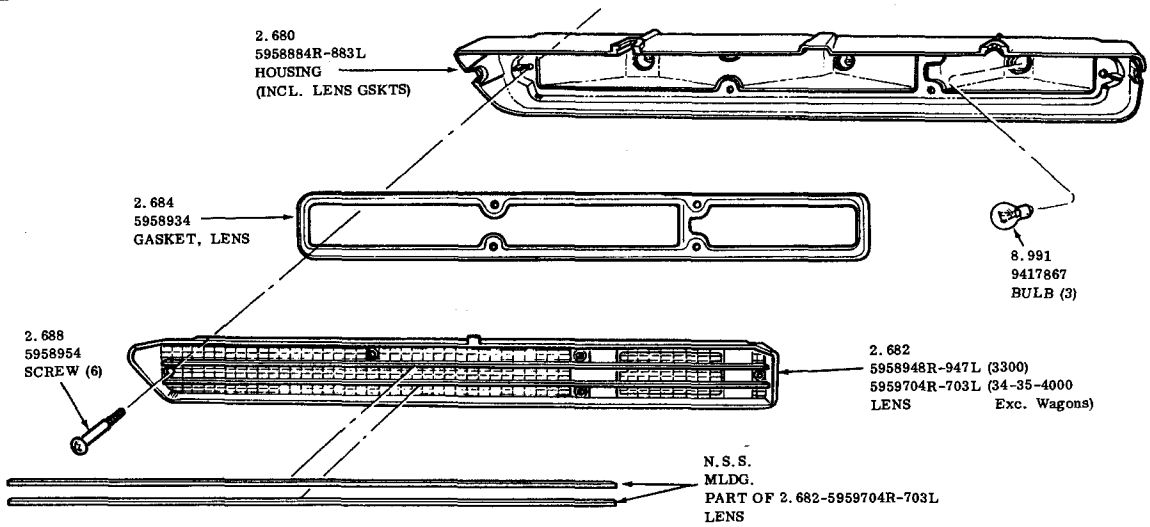

30-4000 EXC. WAGONS

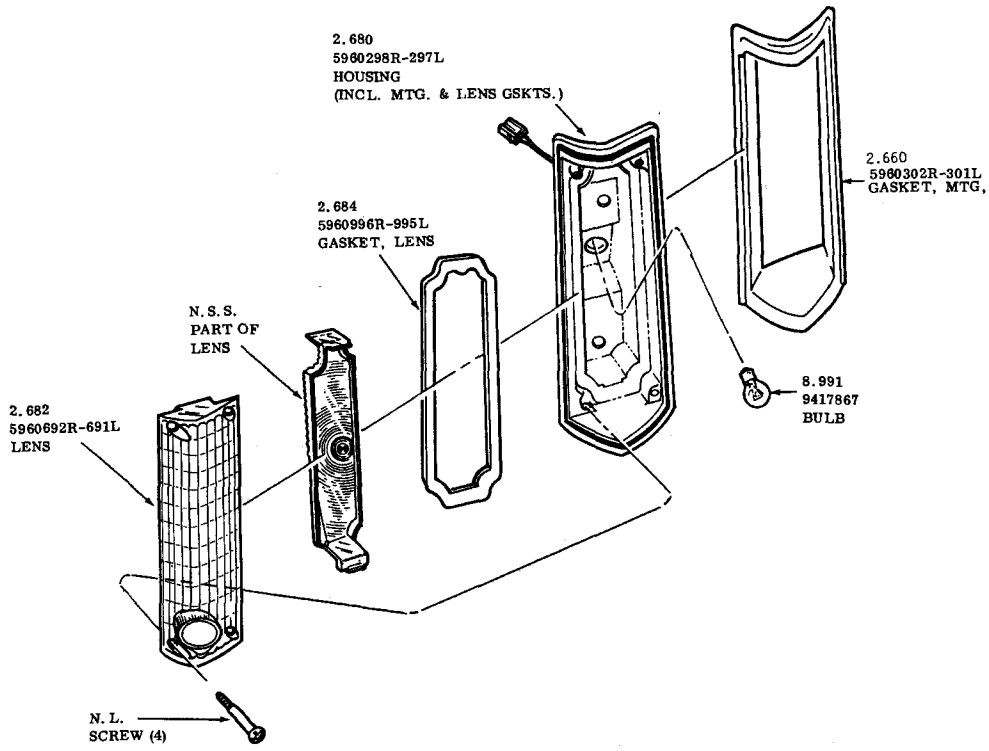

30-4000 WAGONS

COMBINATION STOP, TAIL & DIRECTIONAL SIGNAL LAMP
1968-69-30-4000 WAGONS

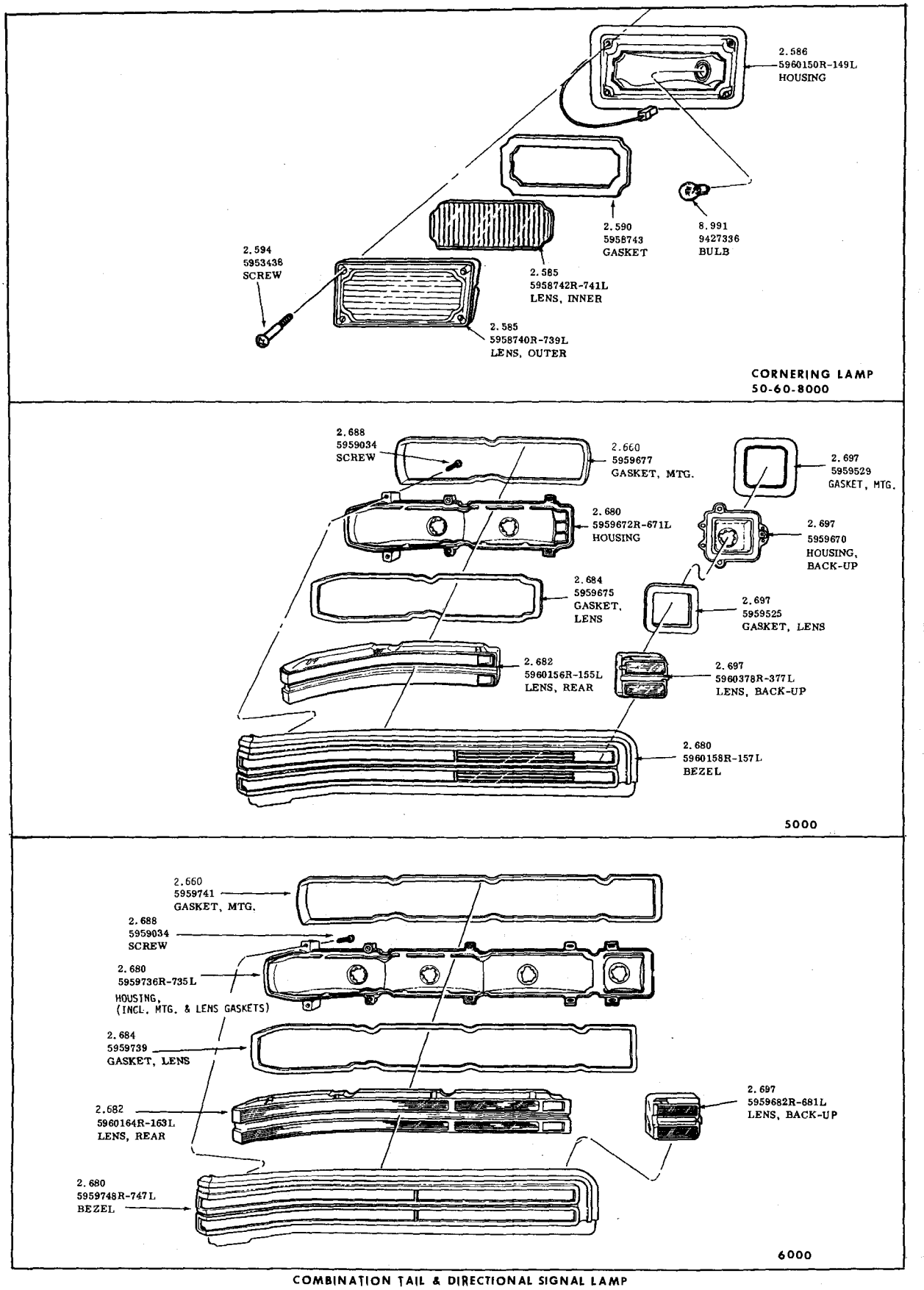

COMBINATION TAIL & DIRECTIONAL SIGNAL LAMP
1968 50-6000

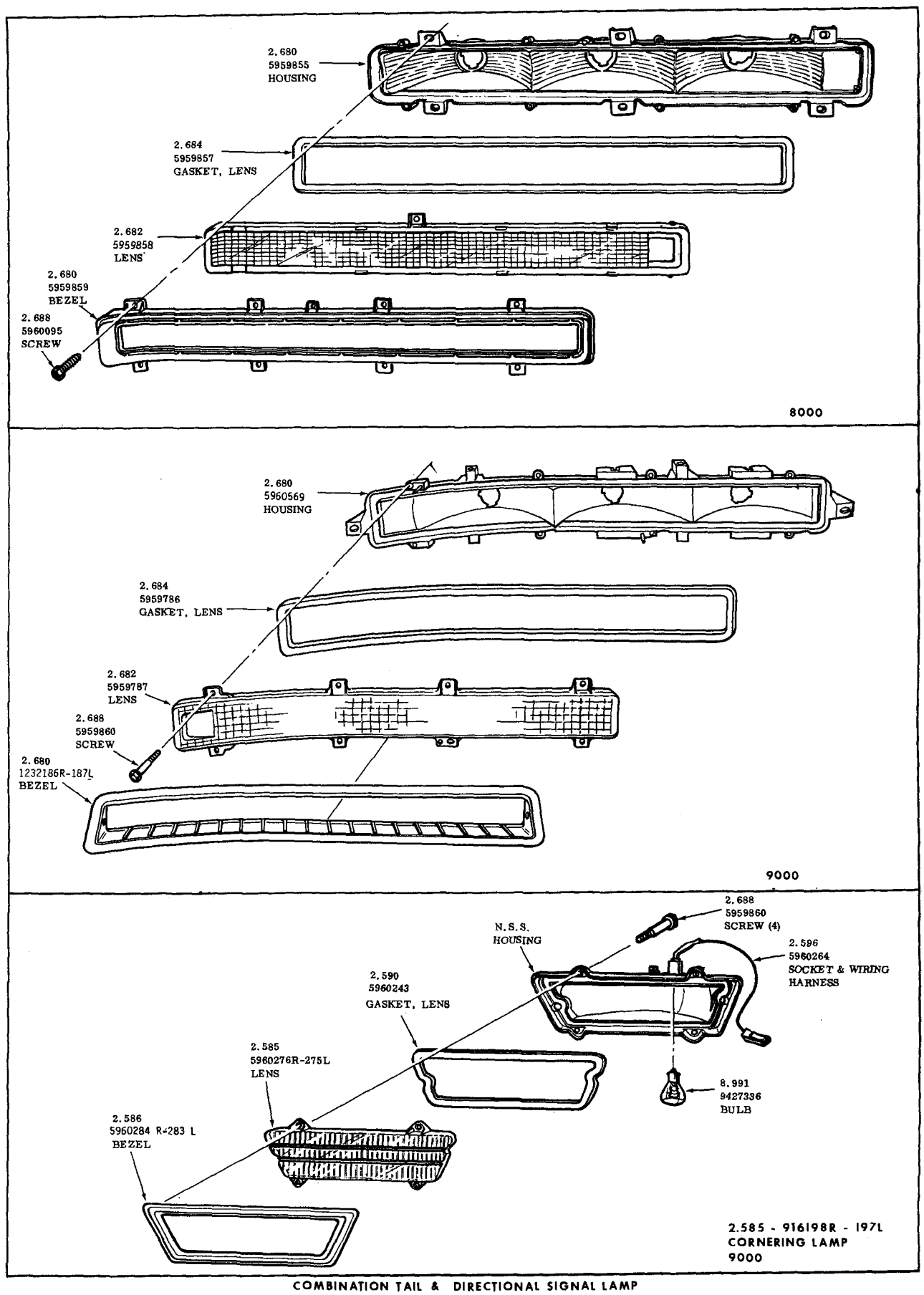

COMBINATION TAIL & DIRECTIONAL SIGNAL LAMP
1968 80-9000

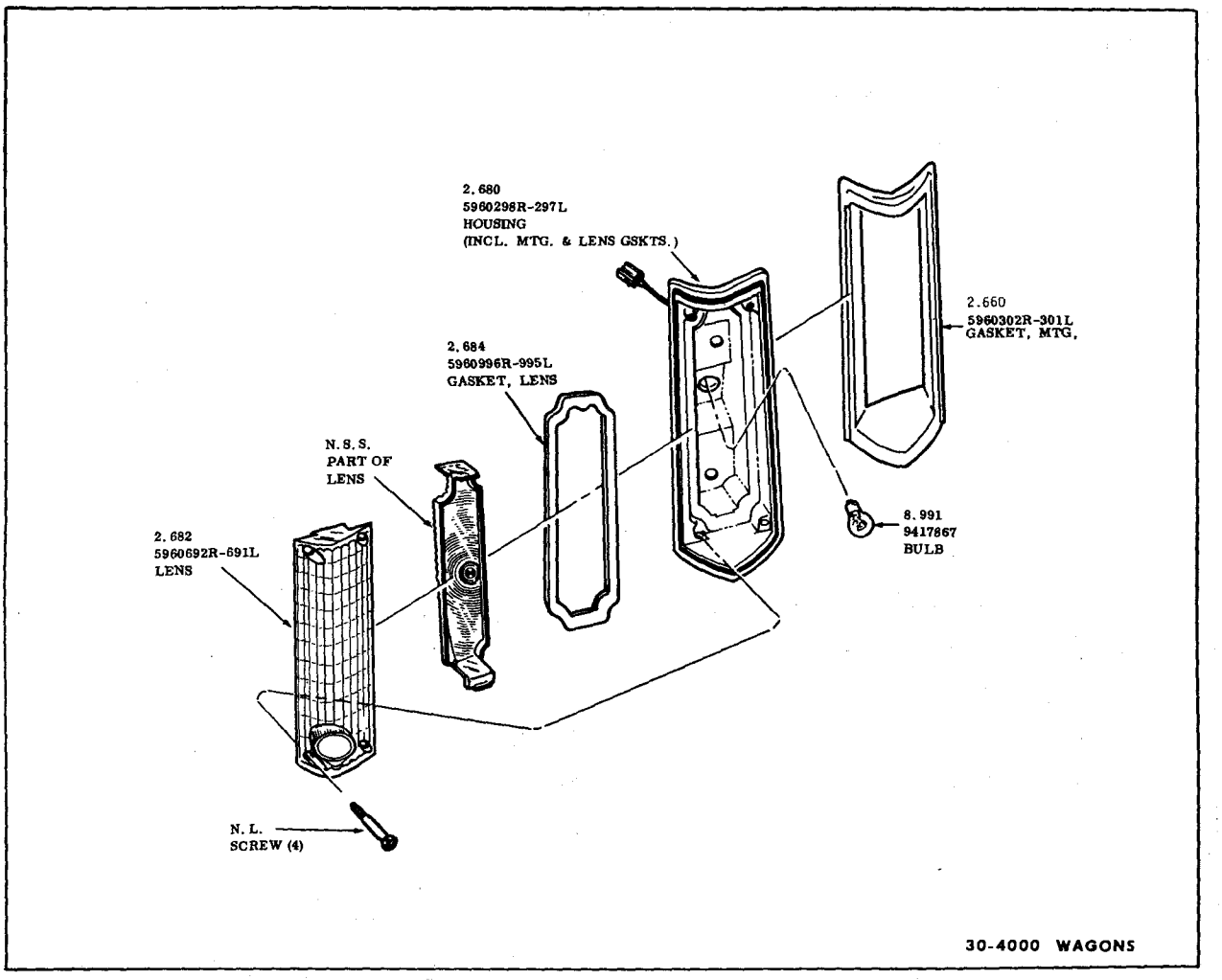

COMBINATION STOP, TAIL & DIRECTIONAL SIGNAL LAMP
1968-69-30-4000 WAGONS

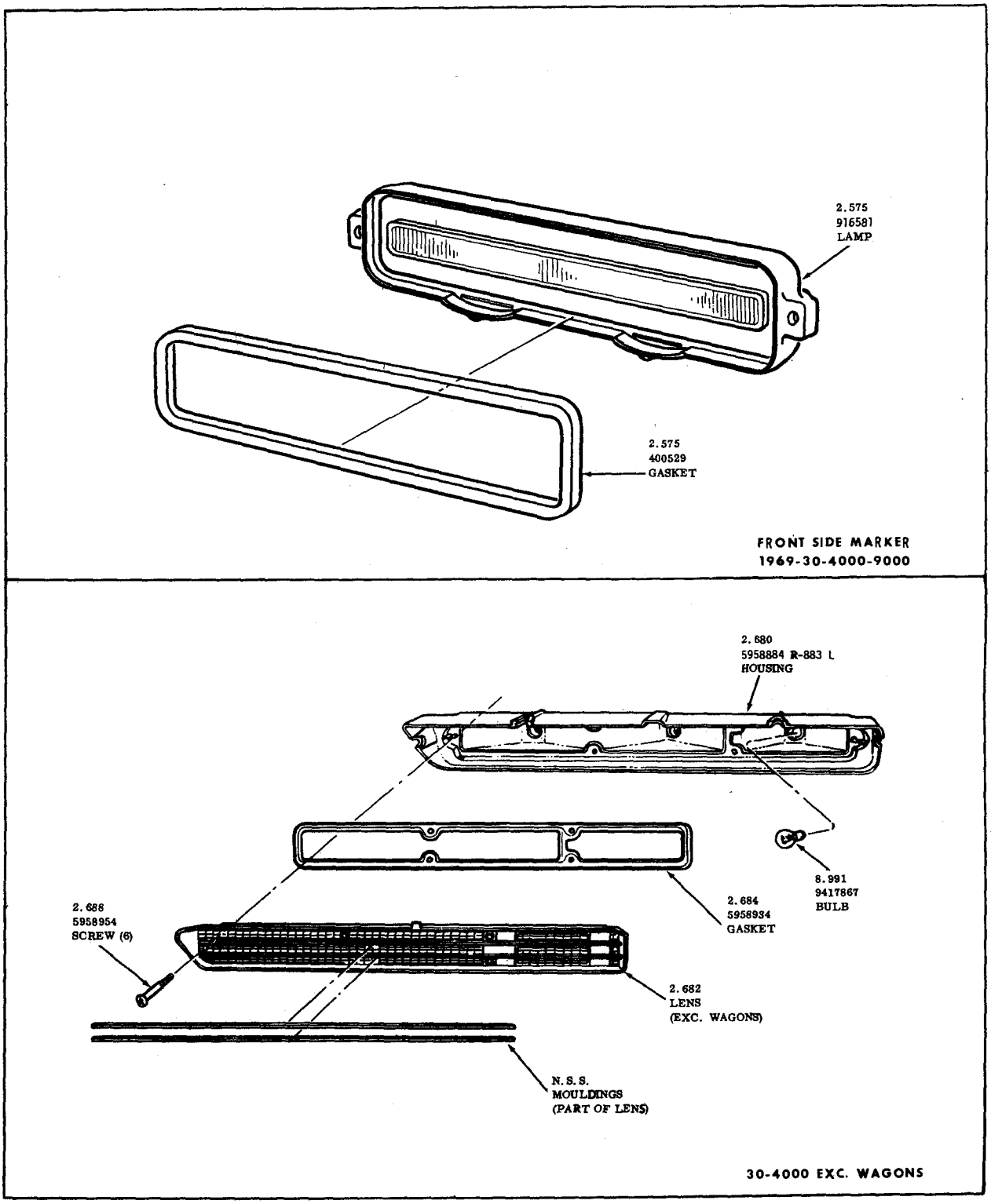

COMBINATION STOP TAIL AND DIRECTIONAL SIGNAL LAMP
1969-30-4000 EXC. WAGONS

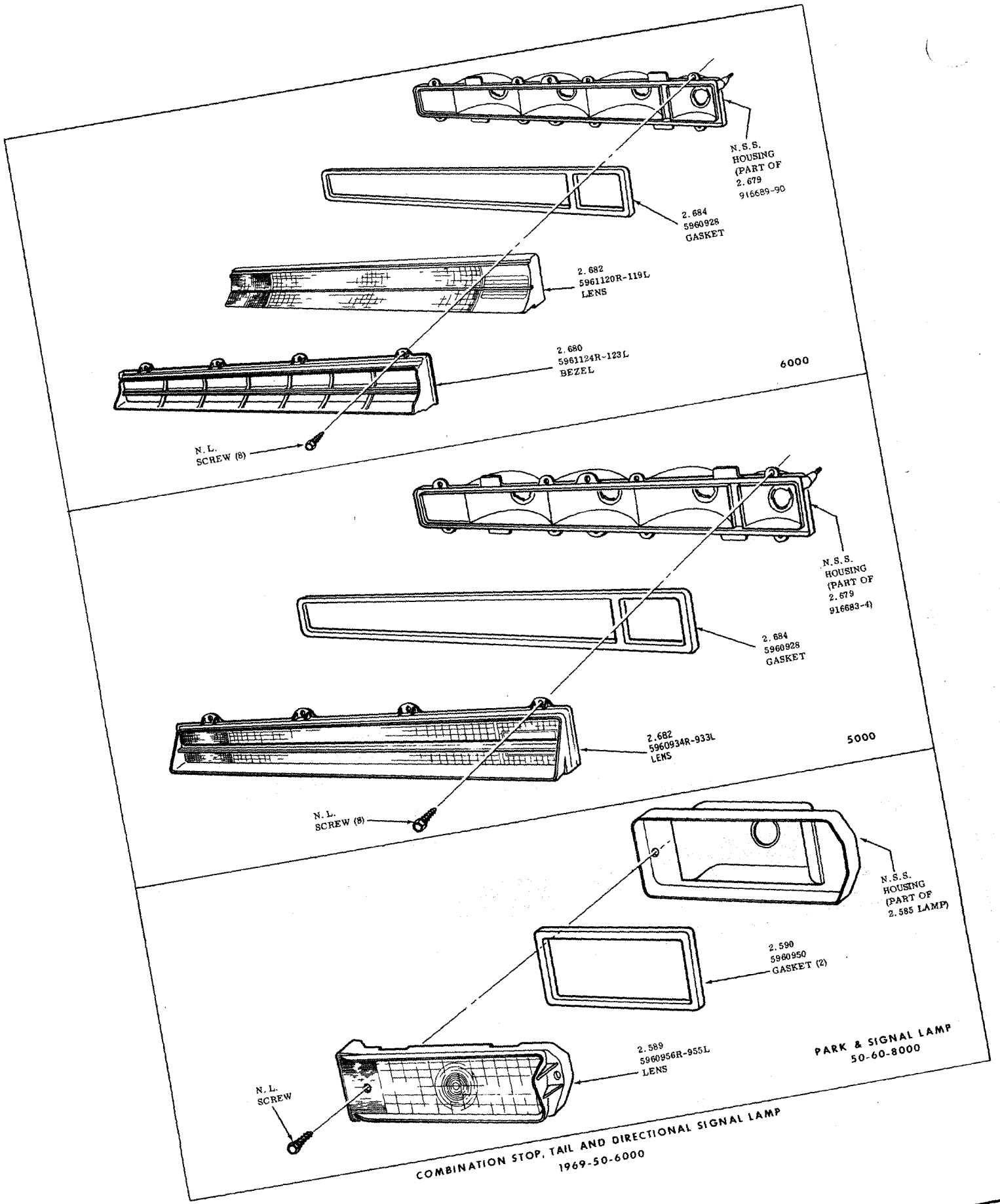
N.S.S.
HOUSING
(PART OF
2.679
916689-90
2.684
5960928
GASKET
2.682
5961120R-119L
LENS
2.680
5961124R-123L
BEZEL
6000
N.L.
SCREW (8)
N.S.S.
HOUSING
(PART OF
2.679
916683-4)
2.684
5960928
GASKET
2.682
5960934R-933L
LENS
5000
N.L.
SCREW (8)
N.S.S.
HOUSING
(PART OF
2.585 LAMP)
2.590
5960950
GASKET (2)
2.589
5960956R-955L
LENS
PARK & SIGNAL LAMP
50-60-8000
N.L.
SCREW
COMBINATION STOP, TAIL AND DIRECTIONAL SIGNAL LAMP
1969-50-6000

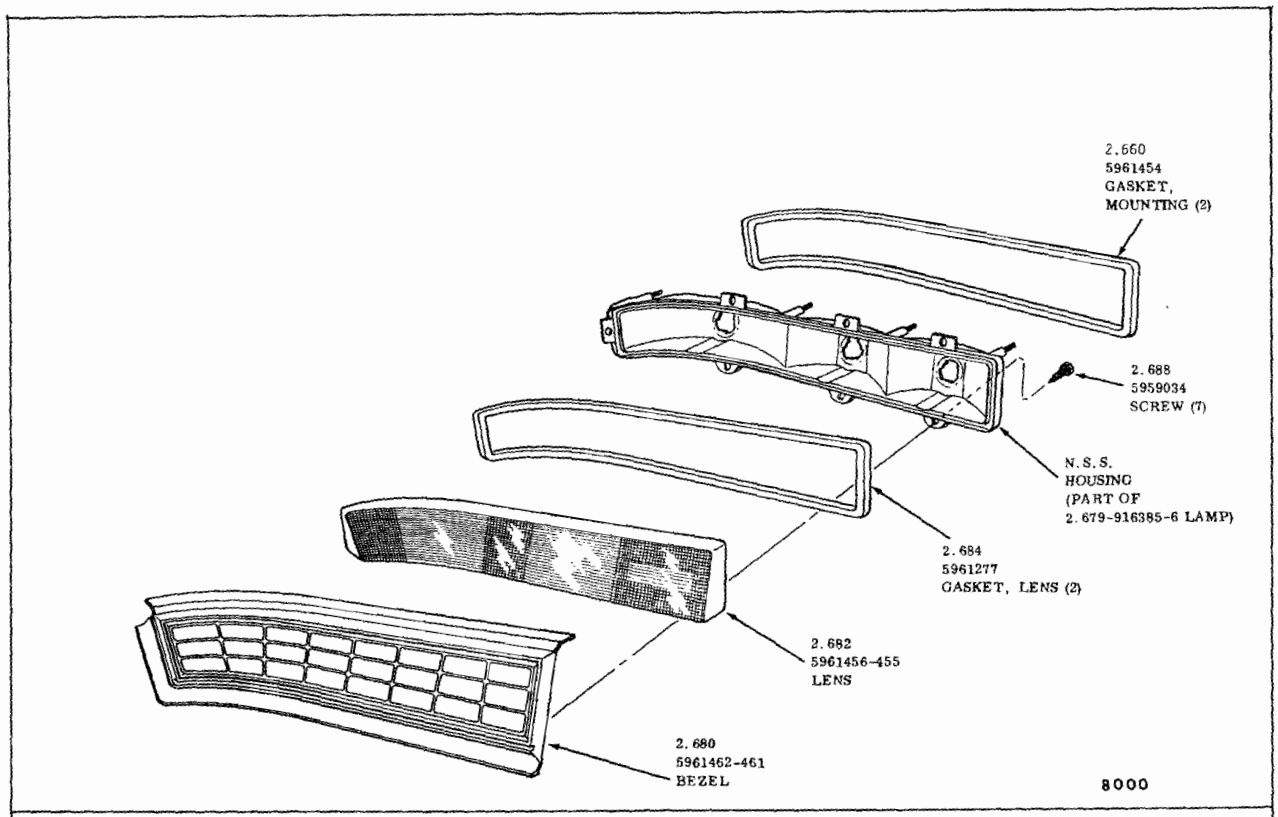

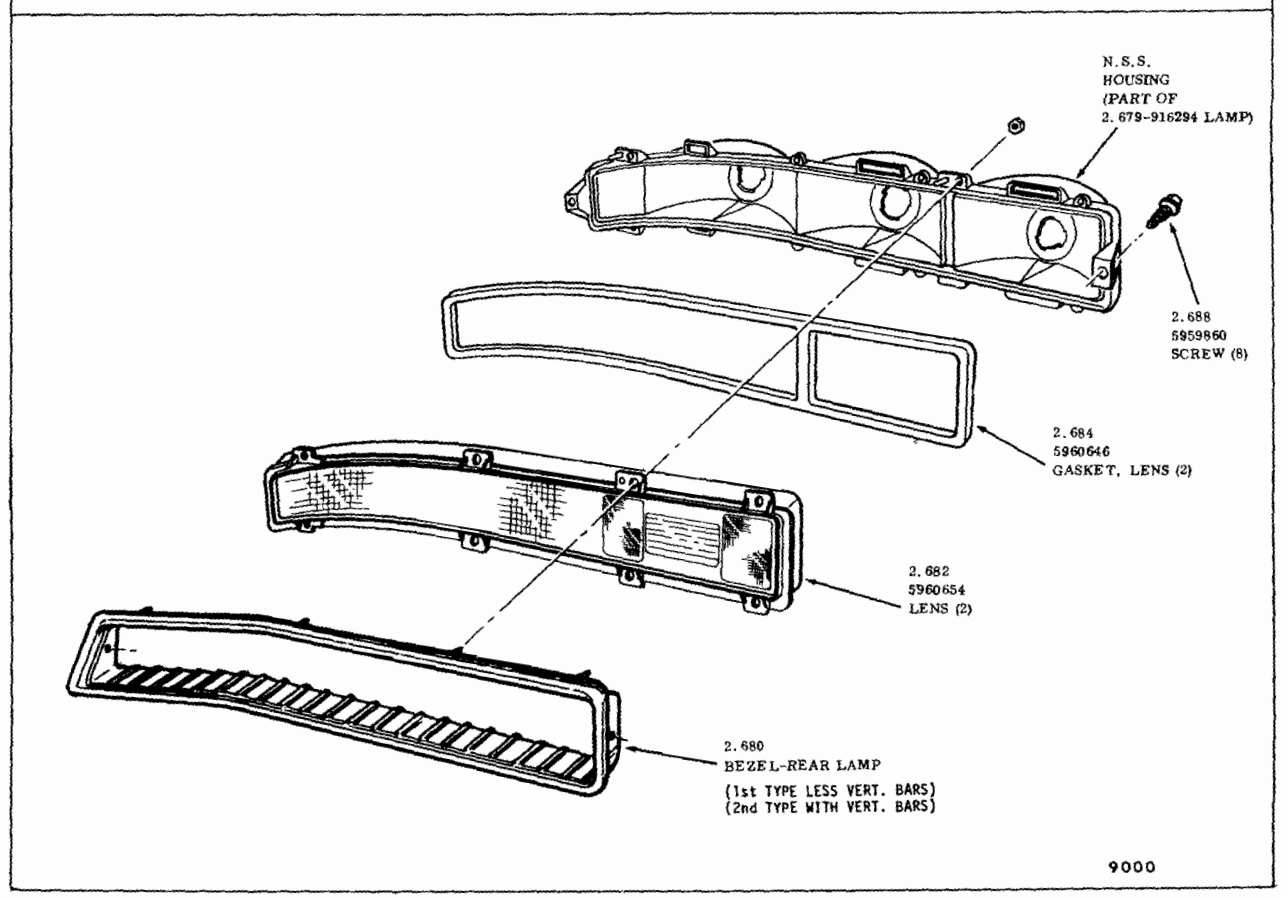

COMBINATION STOP, TAIL AND DIRECTIONAL SIGNAL LAMP
1969-80-9000

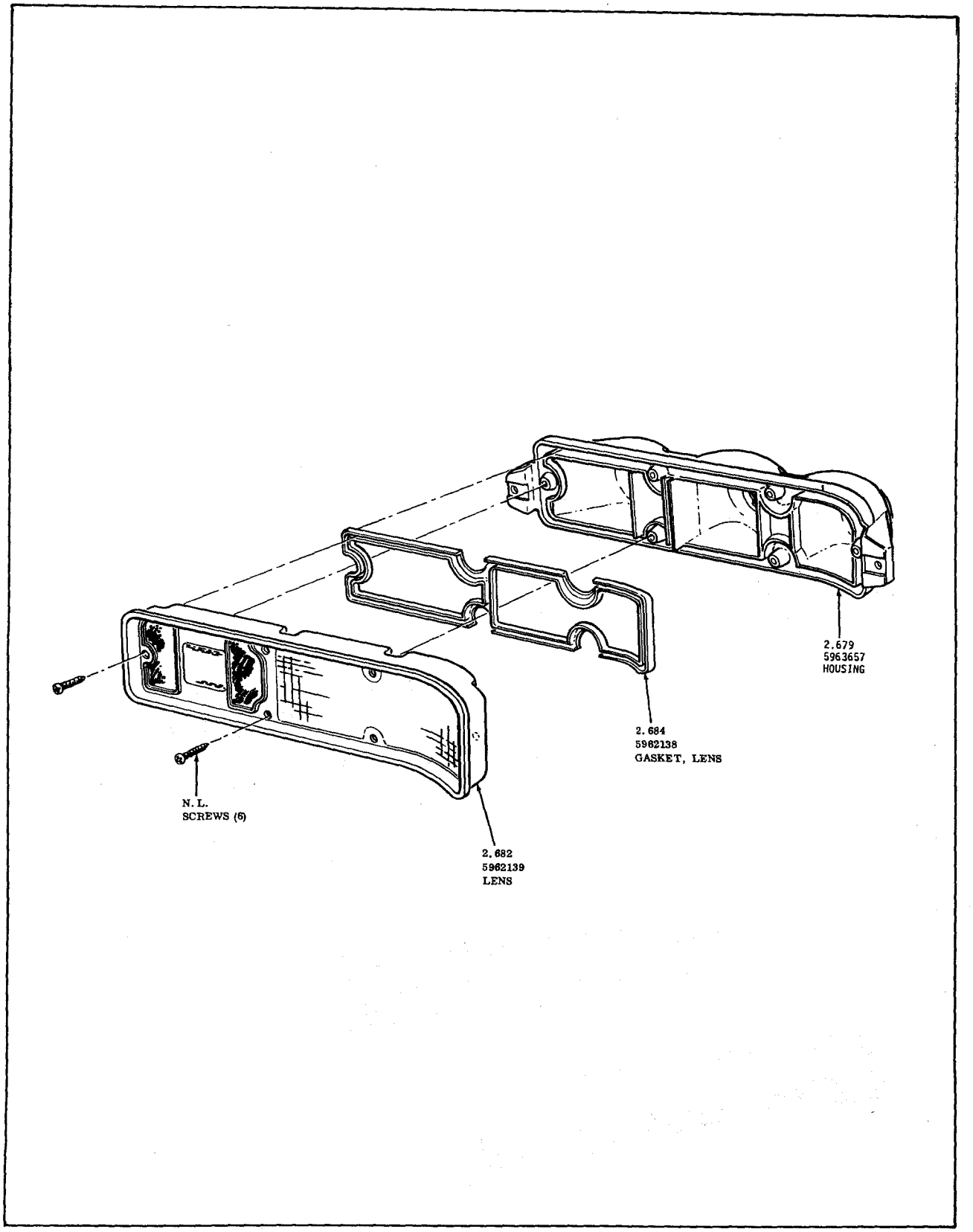

COMBINATION STOP, TAIL, BACK-UP AND DIRECTIONAL SIGNAL LAMP
1970-30-4000

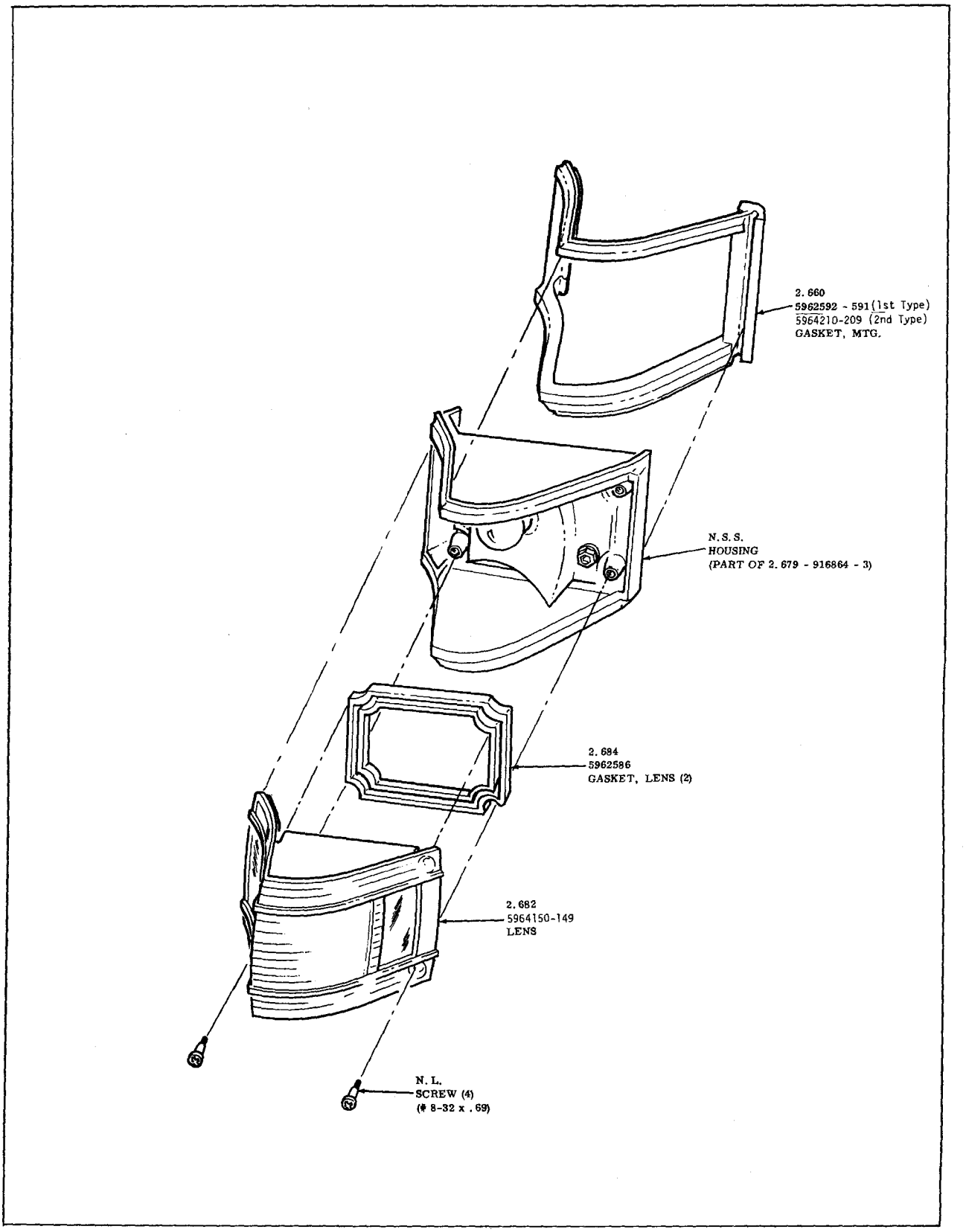

COMBINATION STOP, TAIL AND DIRECTIONAL SIGNAL LAMP
1970-6000 WAGONS

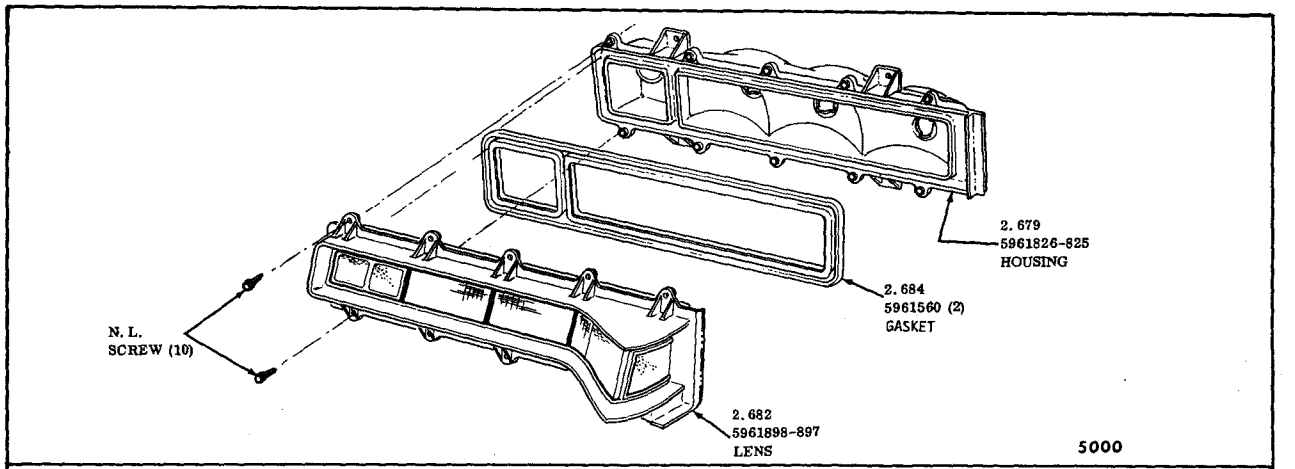

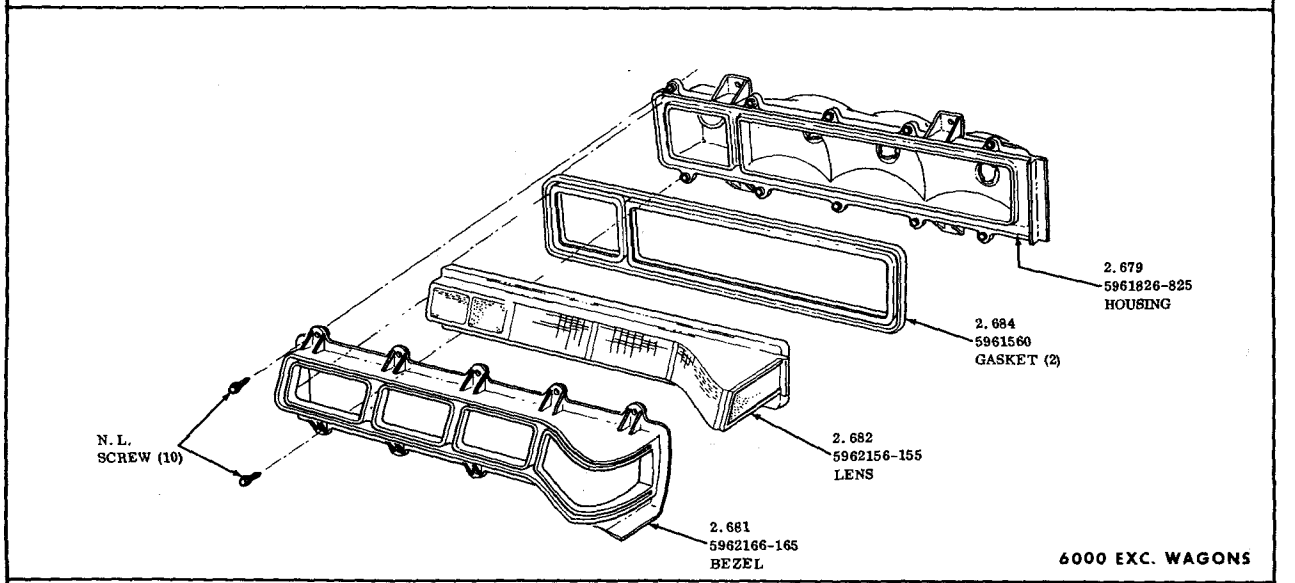

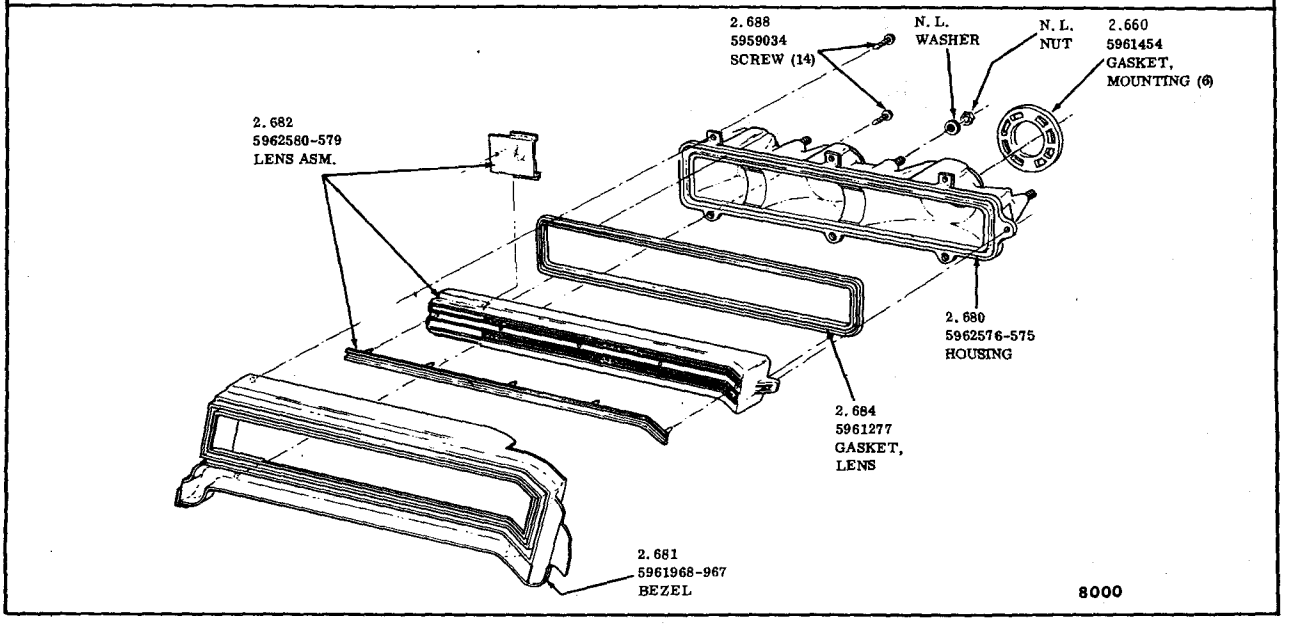

COMBINATION STOP, TAIL AND DIRECTIONAL SIGNAL LAMPS
1970-50-60-8000

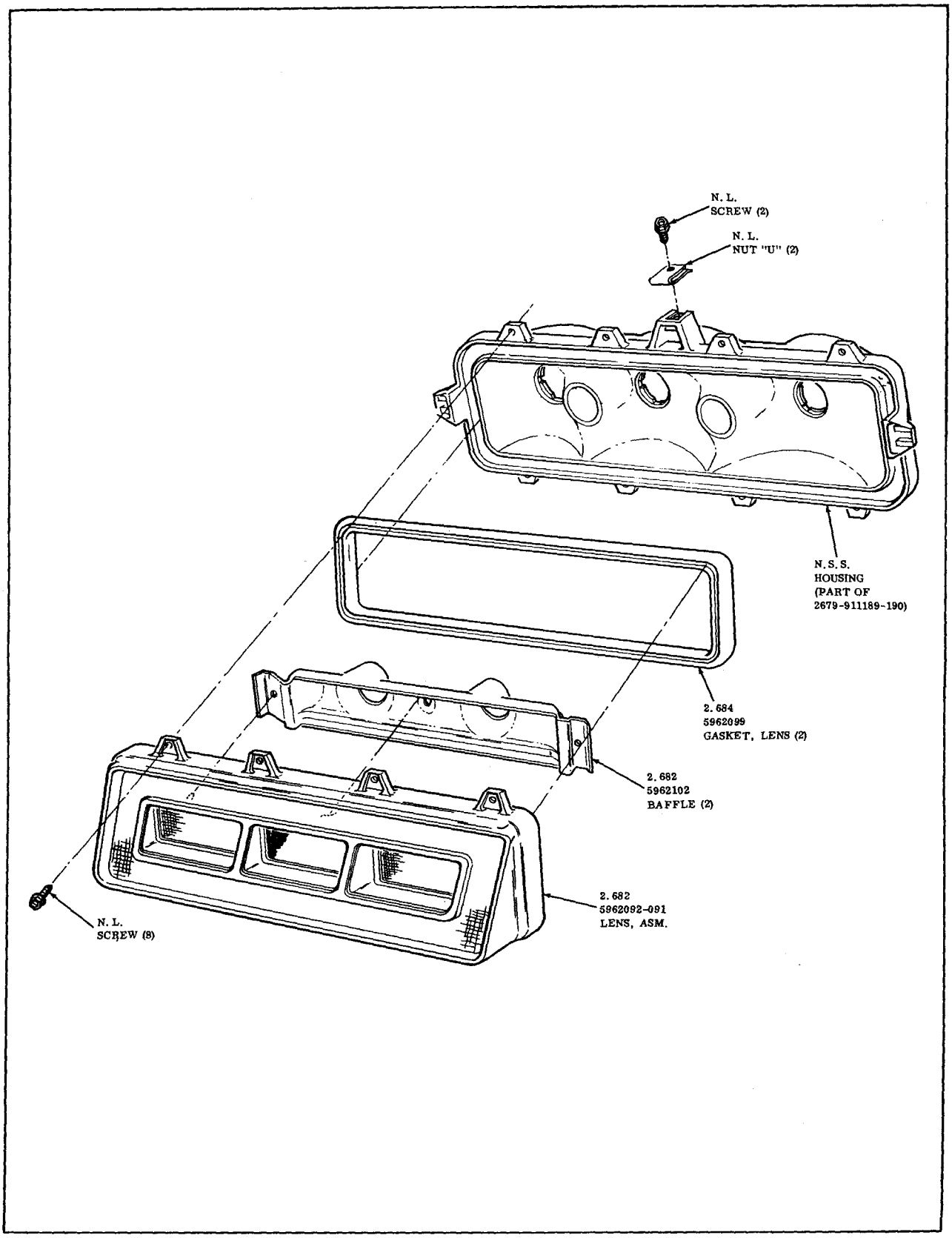

COMBINATION STOP,TAIL AND BACK-UP LAMP
1970-9000

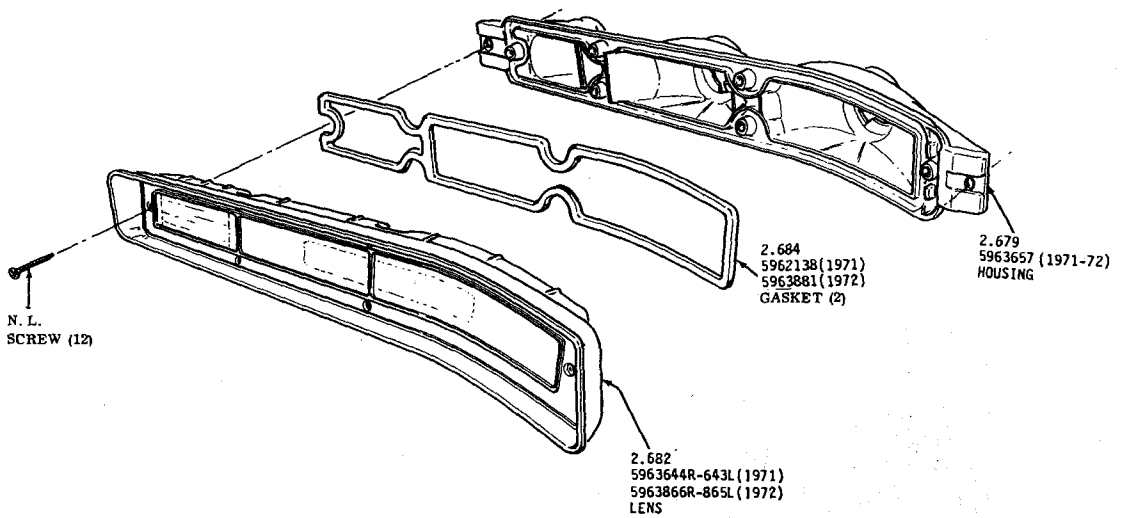

1972 LAMP TYPICAL BUT NOT SHOWN ON ILLUSTRATION

REAR LAMP

1971-1972 30-4000 EXC.3436

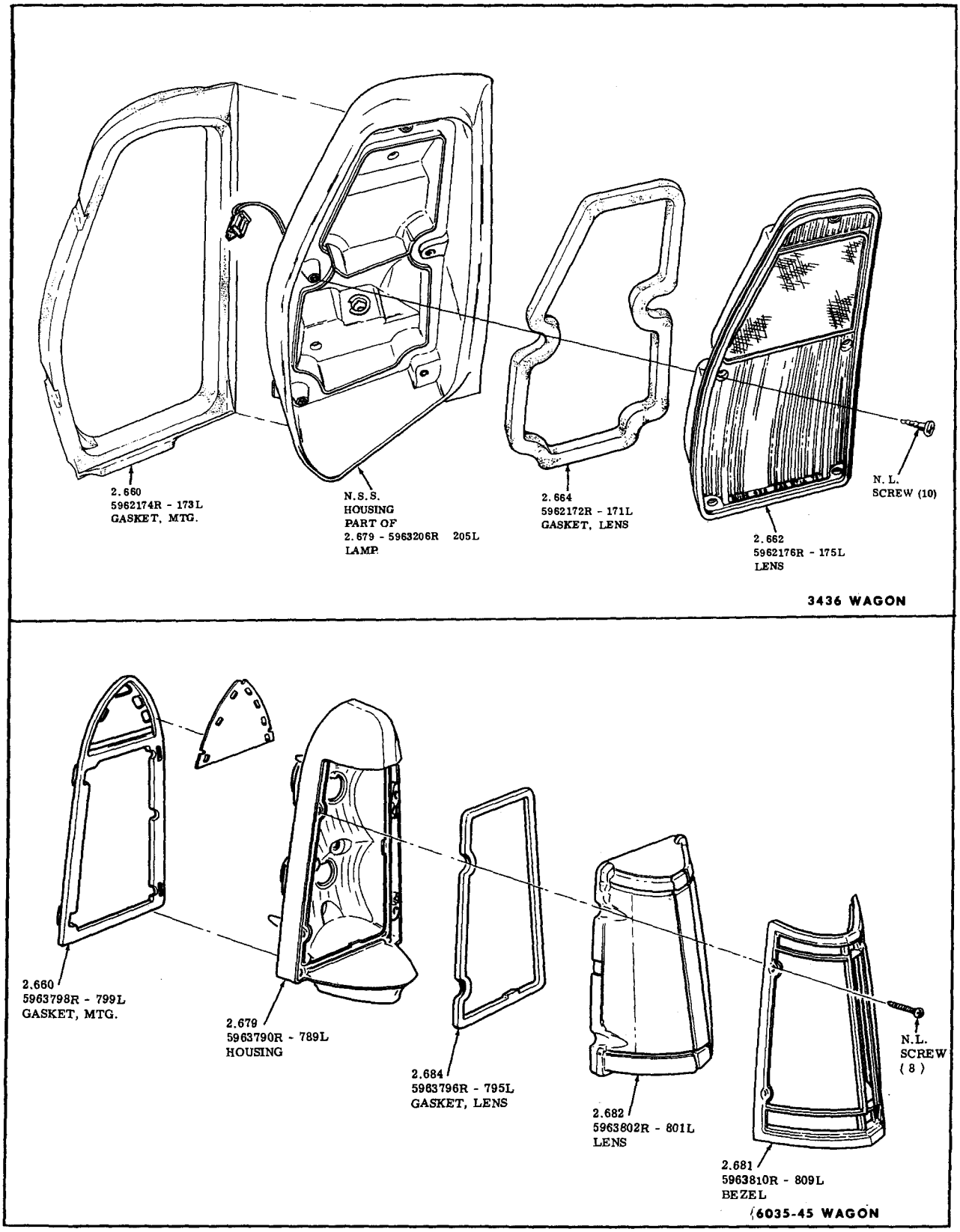

REAR LAMPS

1971-1972 3436-6035-45

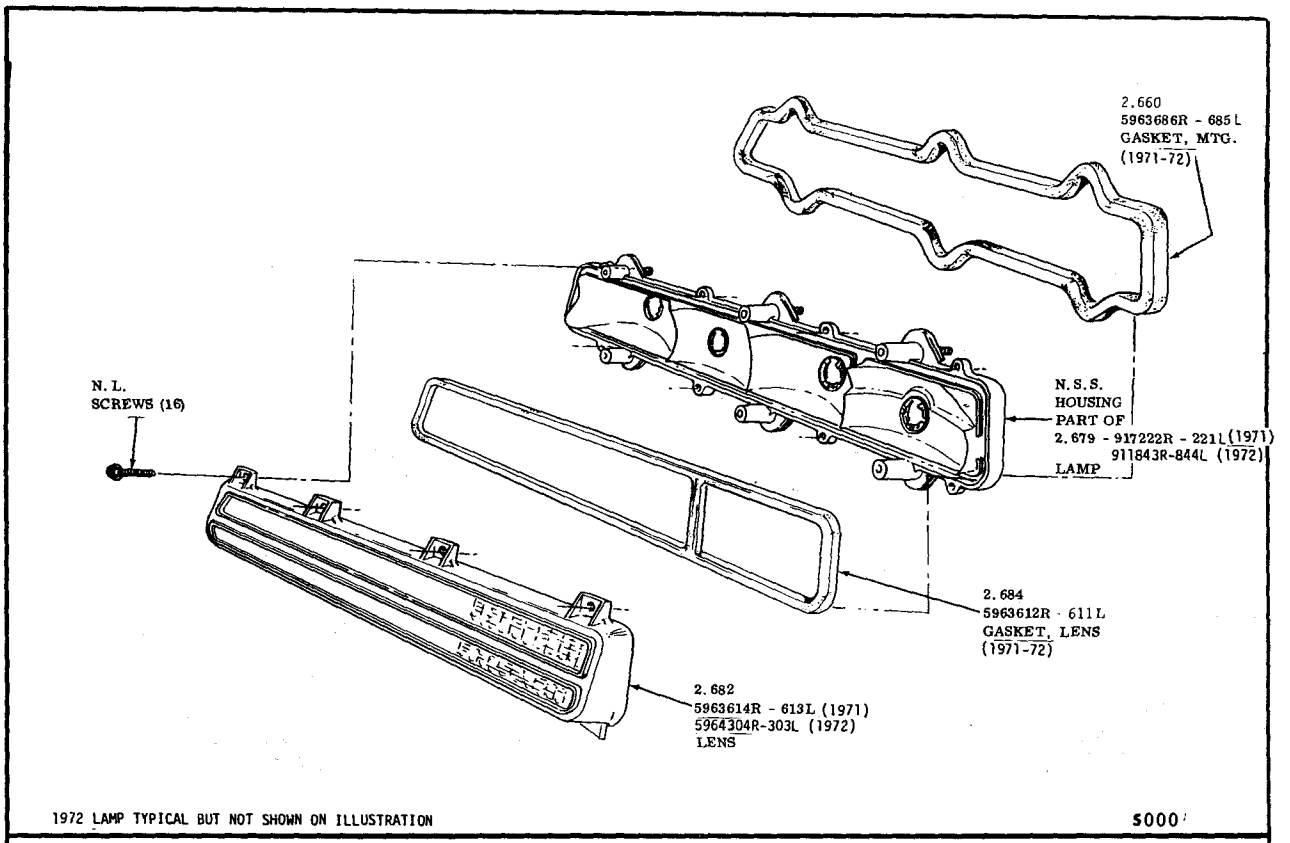

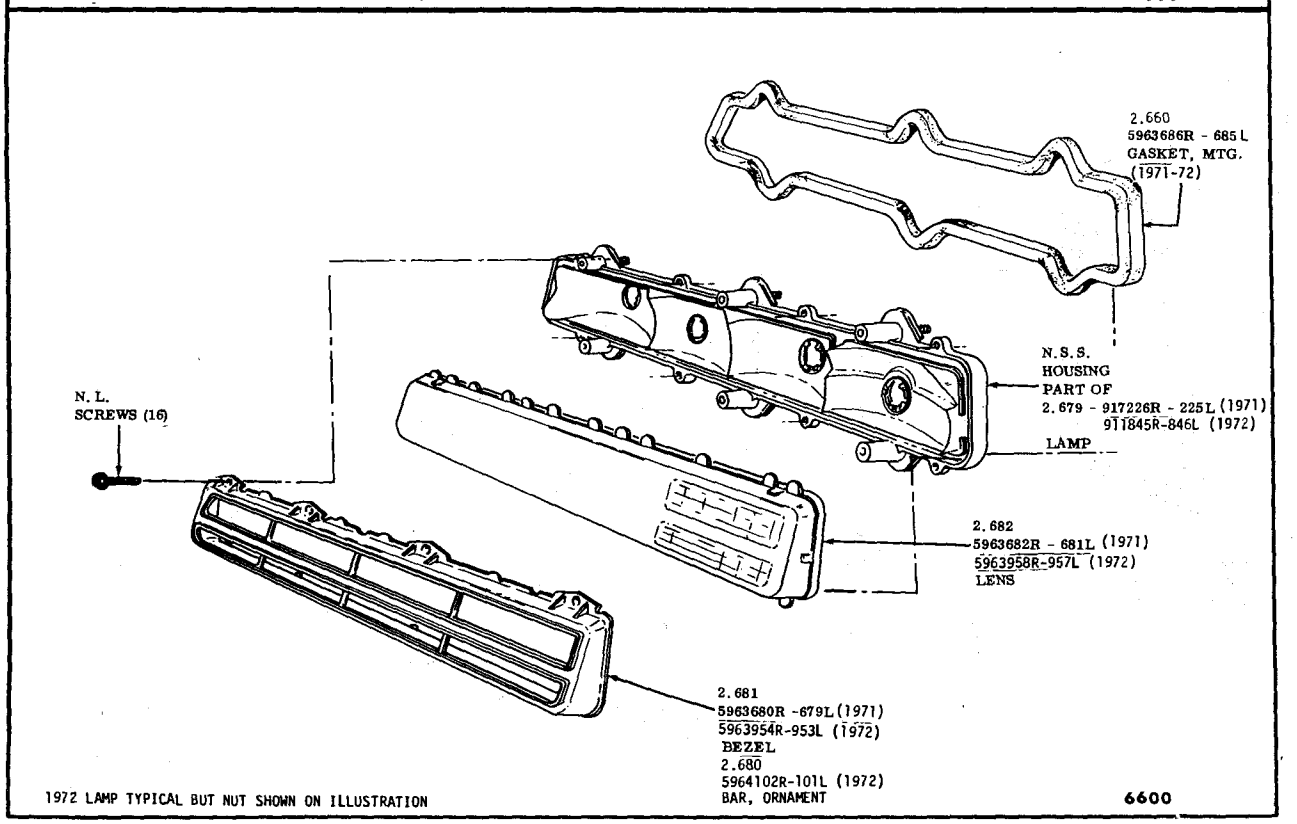

REAR LAMPS

1971 - 1972 50-6600

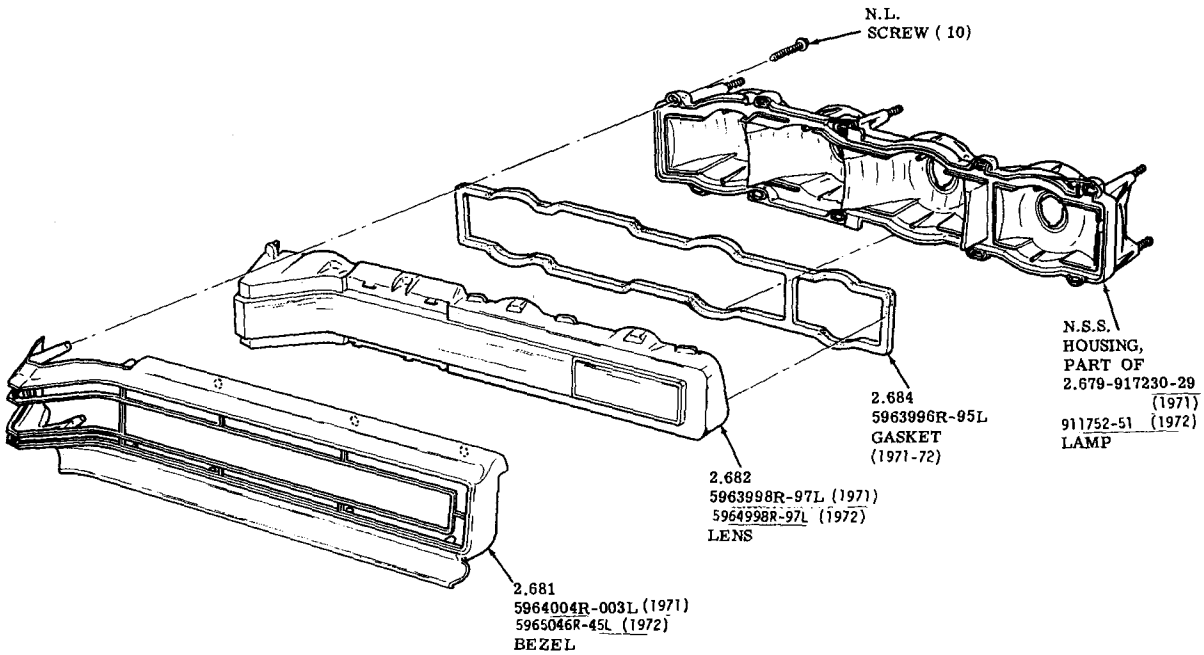

1972 LAMP TYPICAL BUT NOT SHOWN ON ILLUSTRATION

8000

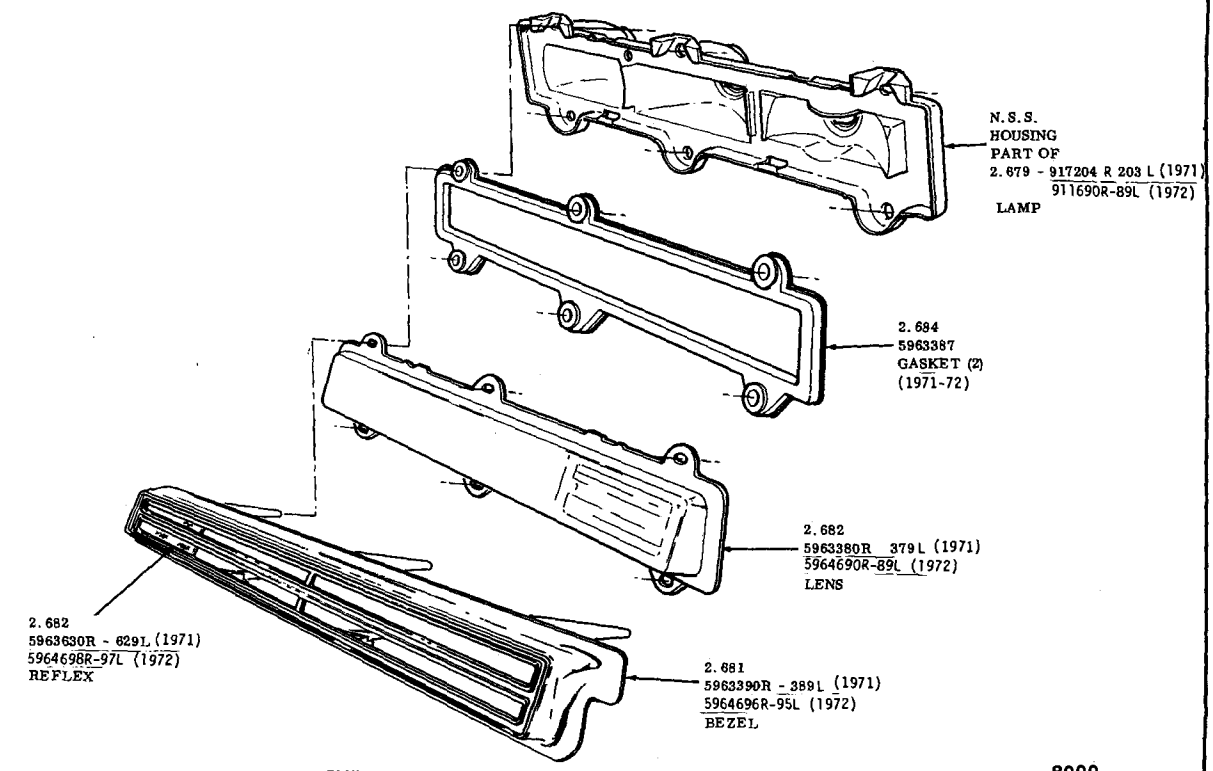

1972 LAMP TYPICAL BUT NOT SHOWN ON ILLUSTRATION

9000

REAR LAMPS

1971- 1972 80-9000

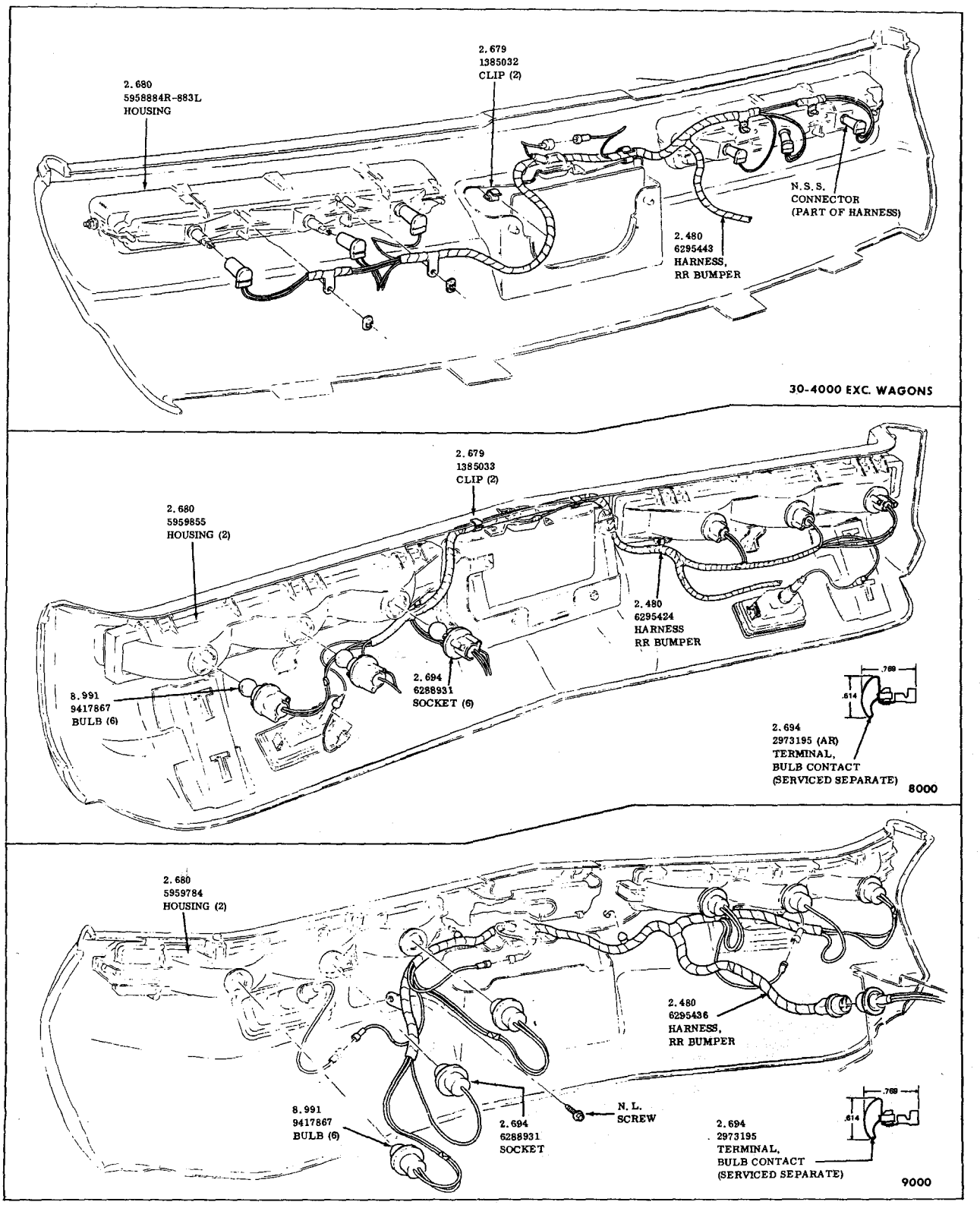

WIRING HARNESS REAR BUMPER
1968-ALL EXC. WAGONS-50-6000

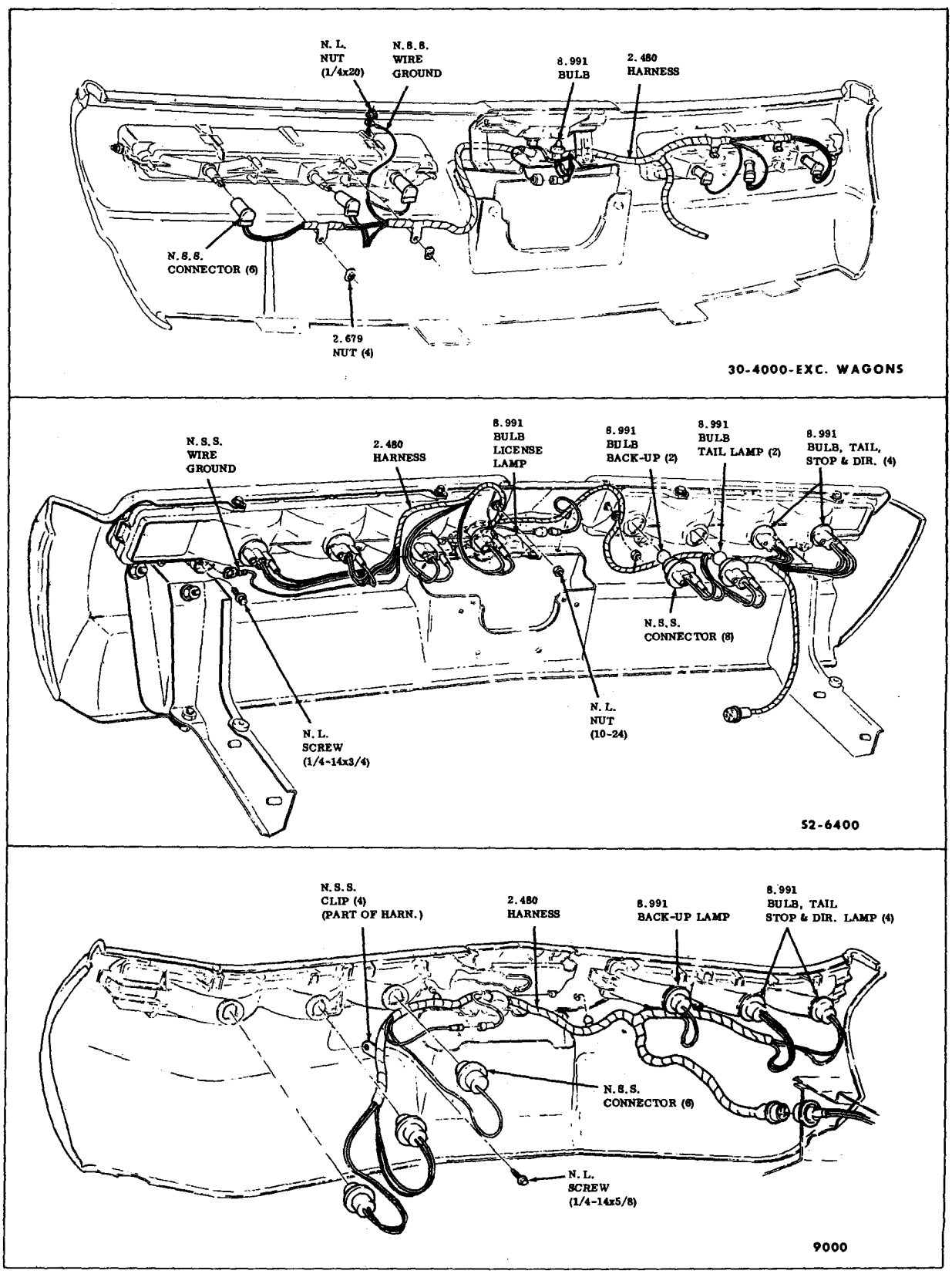

WIRING HARNESS REAR BUMPER
1969-ALL EXC. WAGONS & 8000

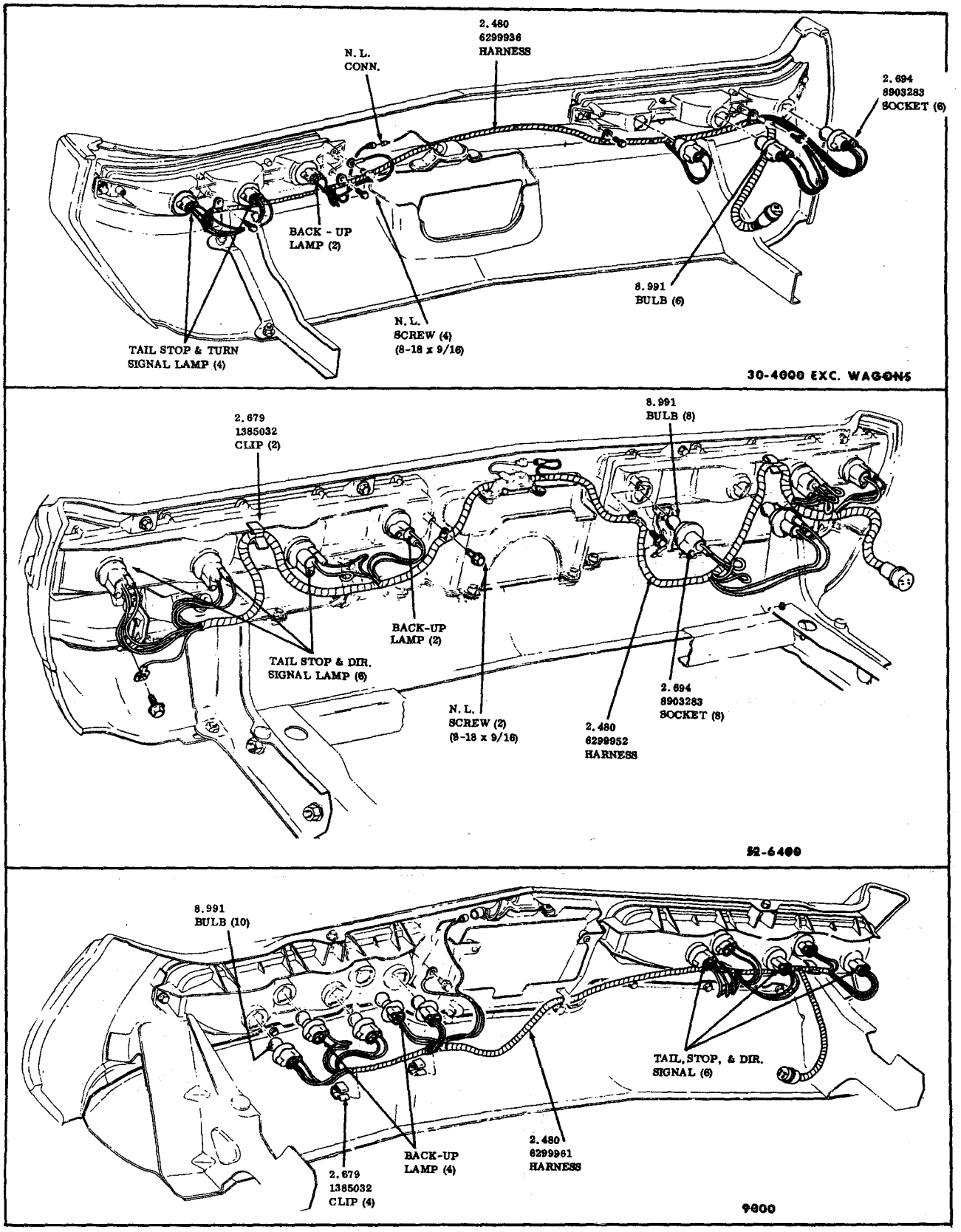

REAR BUMPER WIRING
1970-30-40-52-64-9000

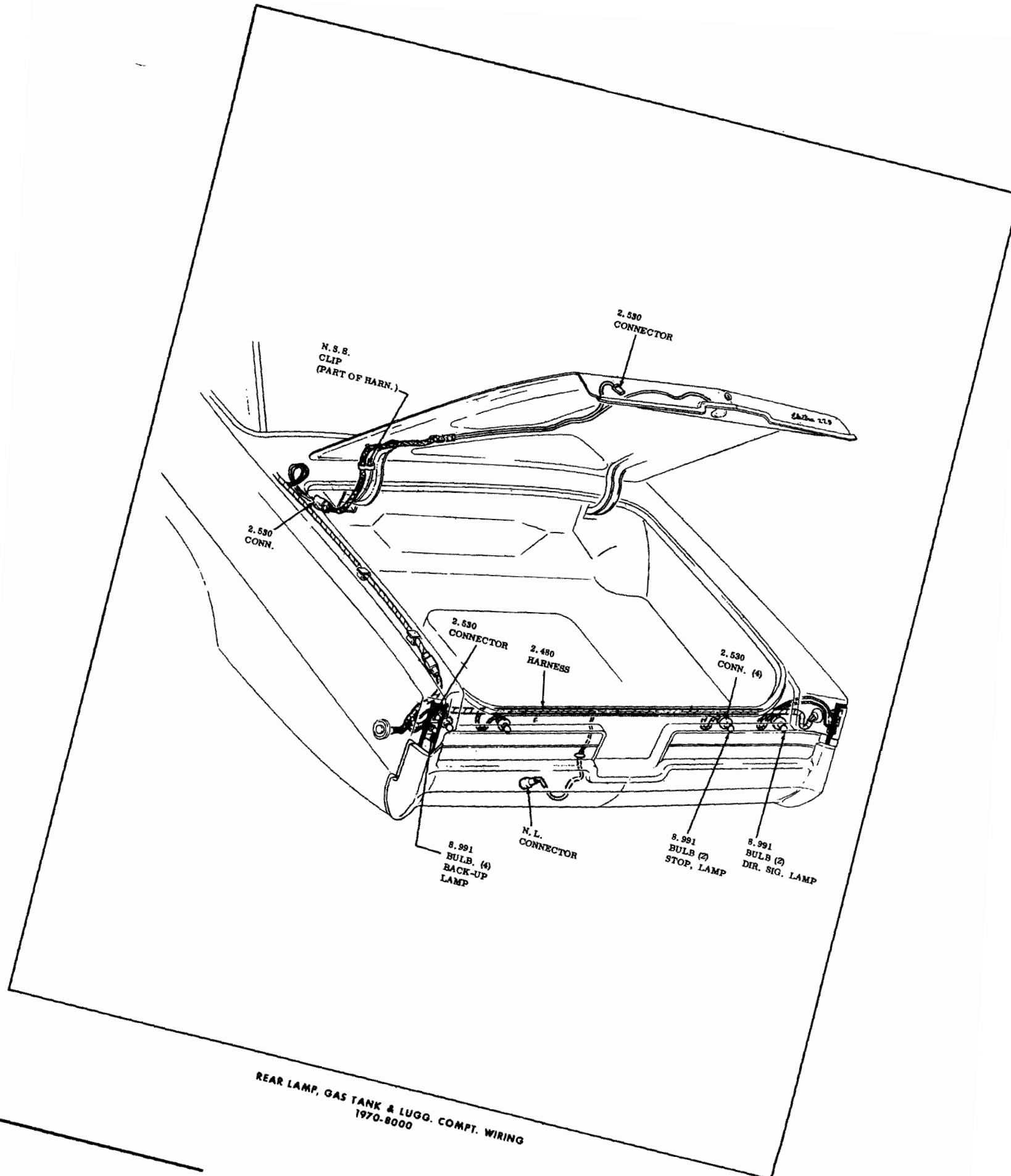

REAR LAMP, GAS TANK & LUGG. COMPT. WIRING
1970-8000

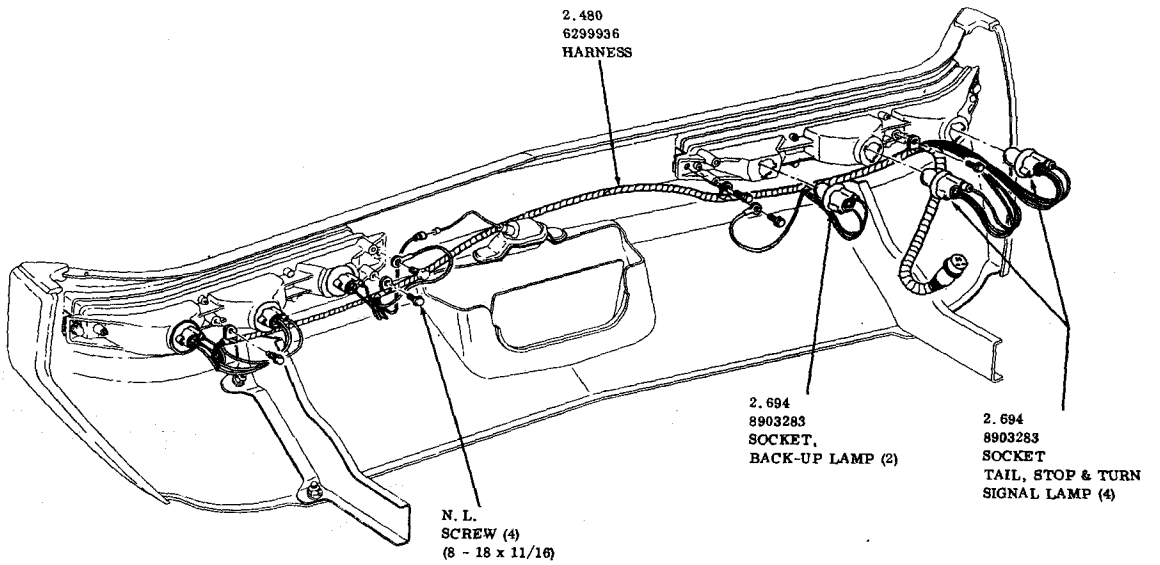

REAR BUMPER WIRING

1971-1972 30-4000 EXC. WAGONS

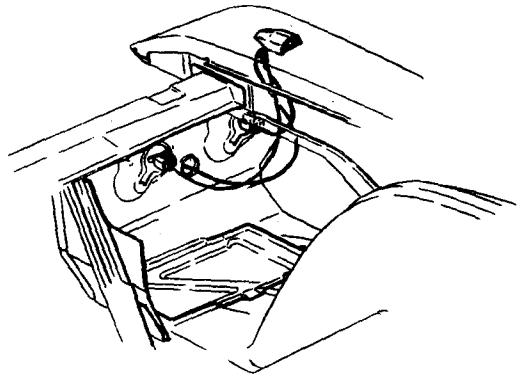

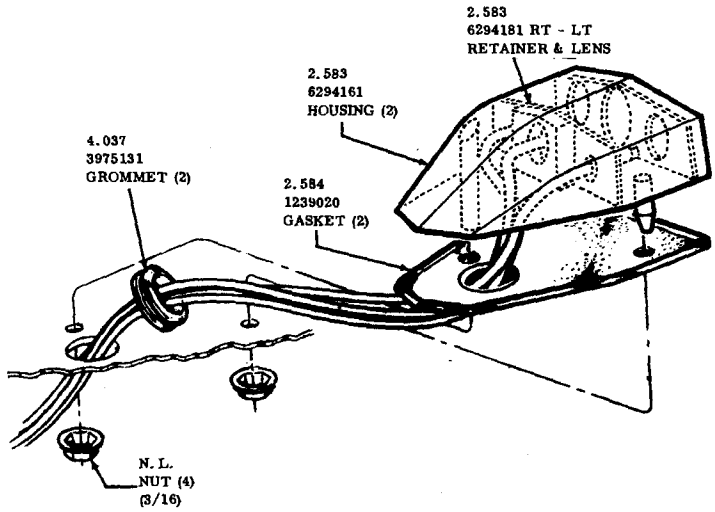

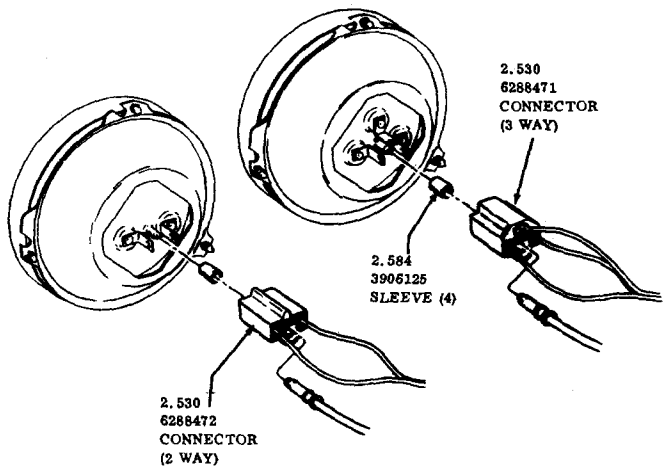

FRONT LIGHT MONITORS

1971-1972 50-60-80-9000

GROUP 3

FUEL AND EXHAUST

CARBURETION

MEMORANDA

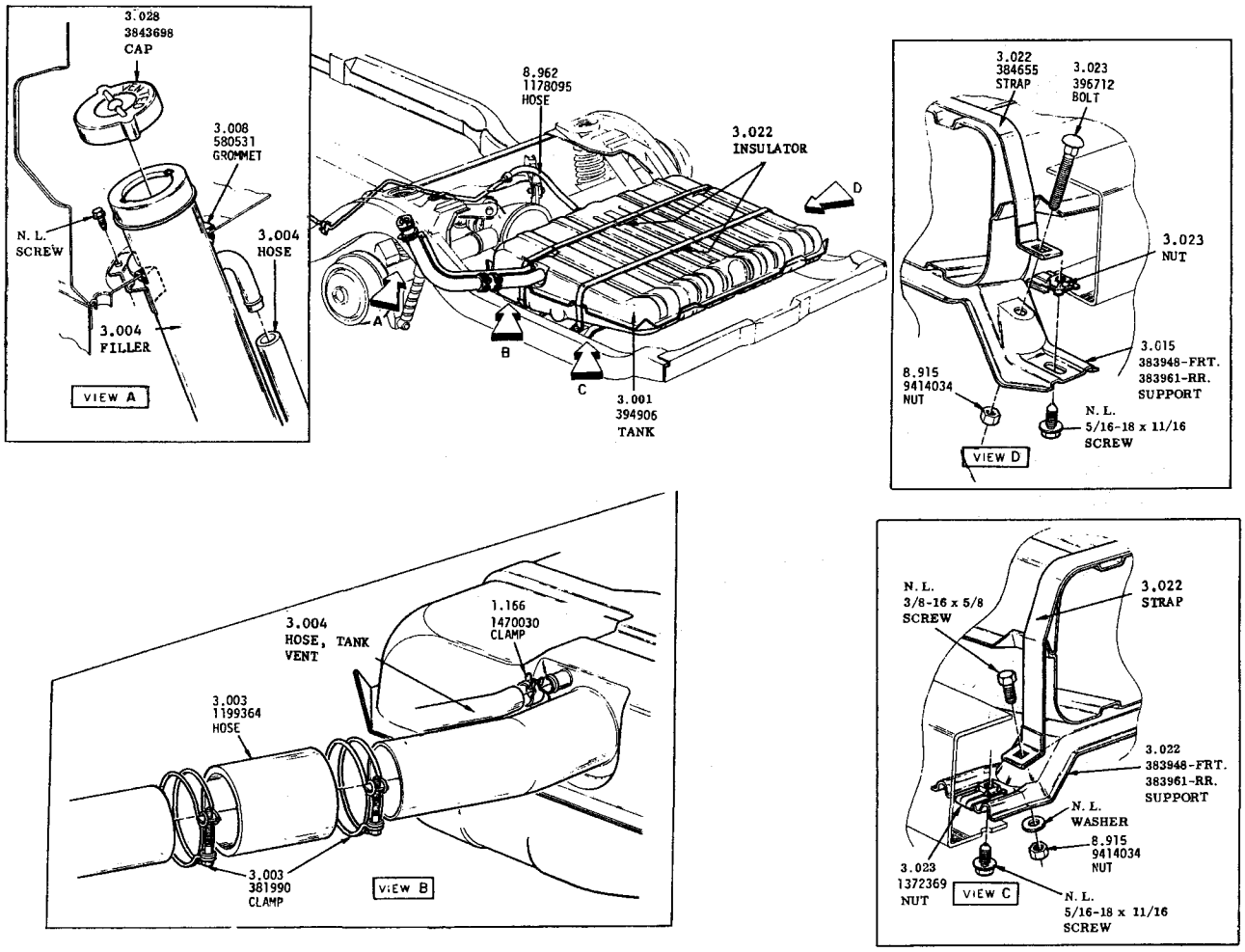

GAS TANK AND ATTACHING PARTS
1964--4035—4135

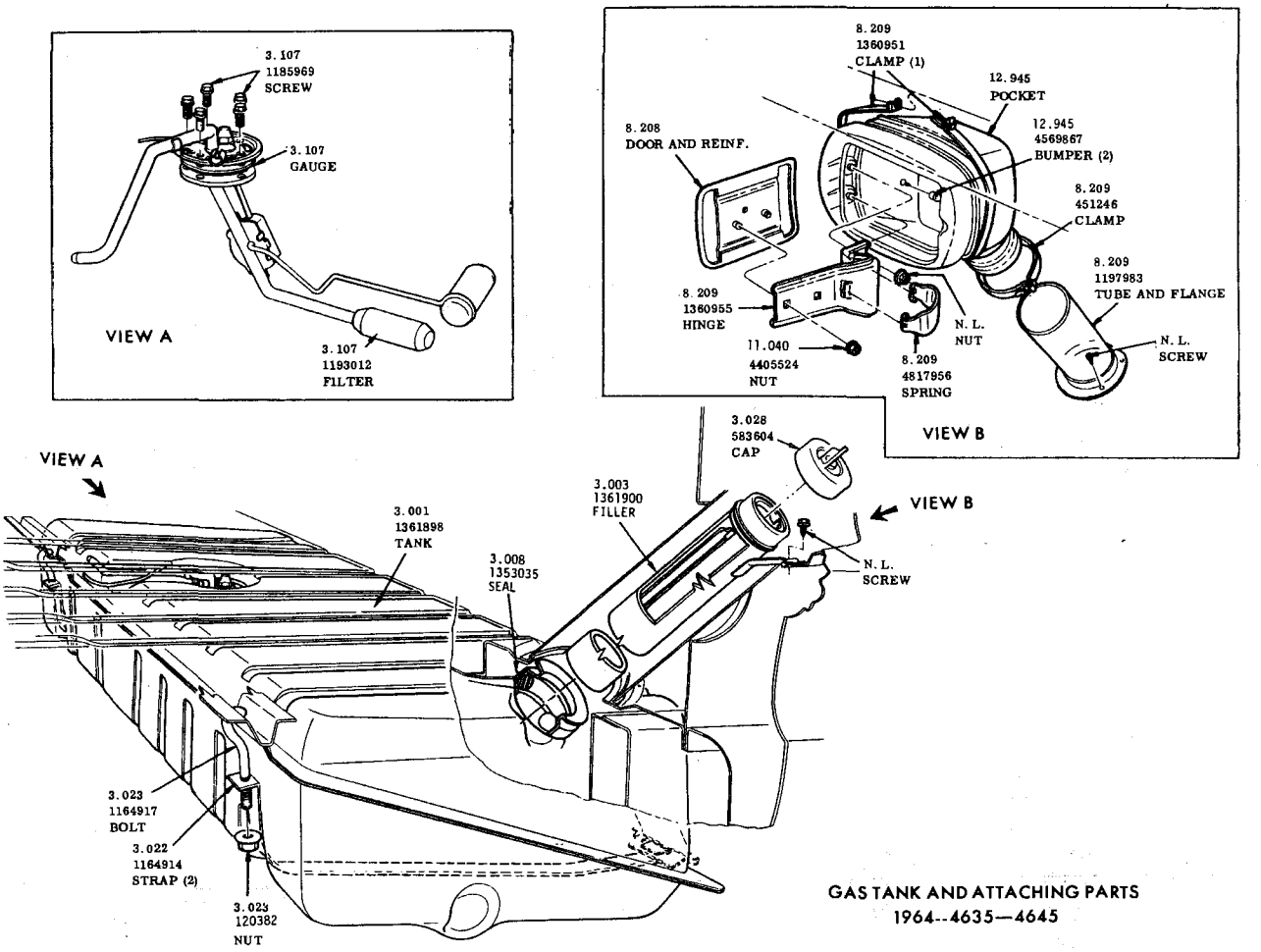

GAS TANK AND ATTACHING PARTS
1964--4635—4645

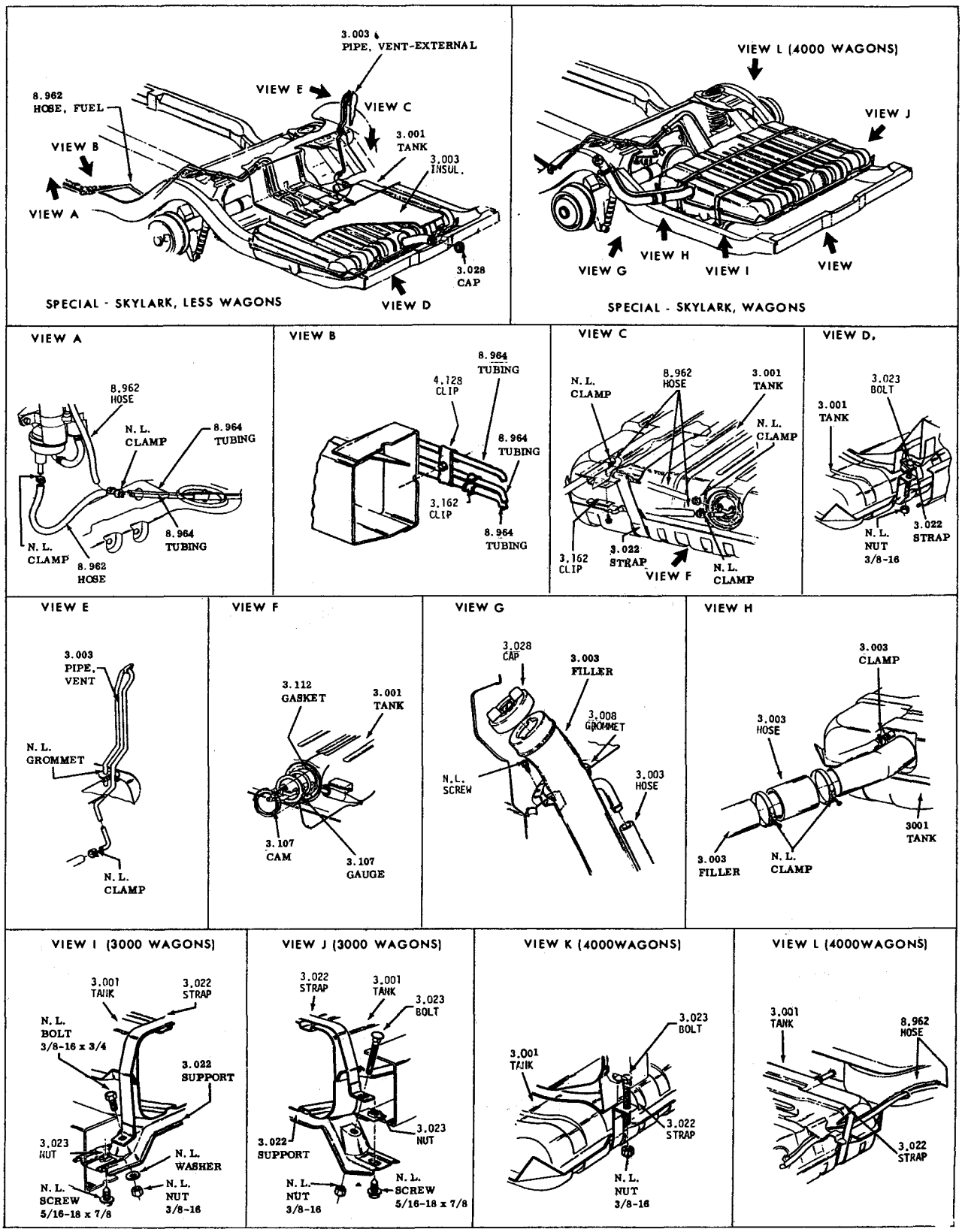

GAS TANK AND ATTACHING PARTS

1966-1967 — SPECIAL — SKYLARK — SKYLARK GRAN SPORT

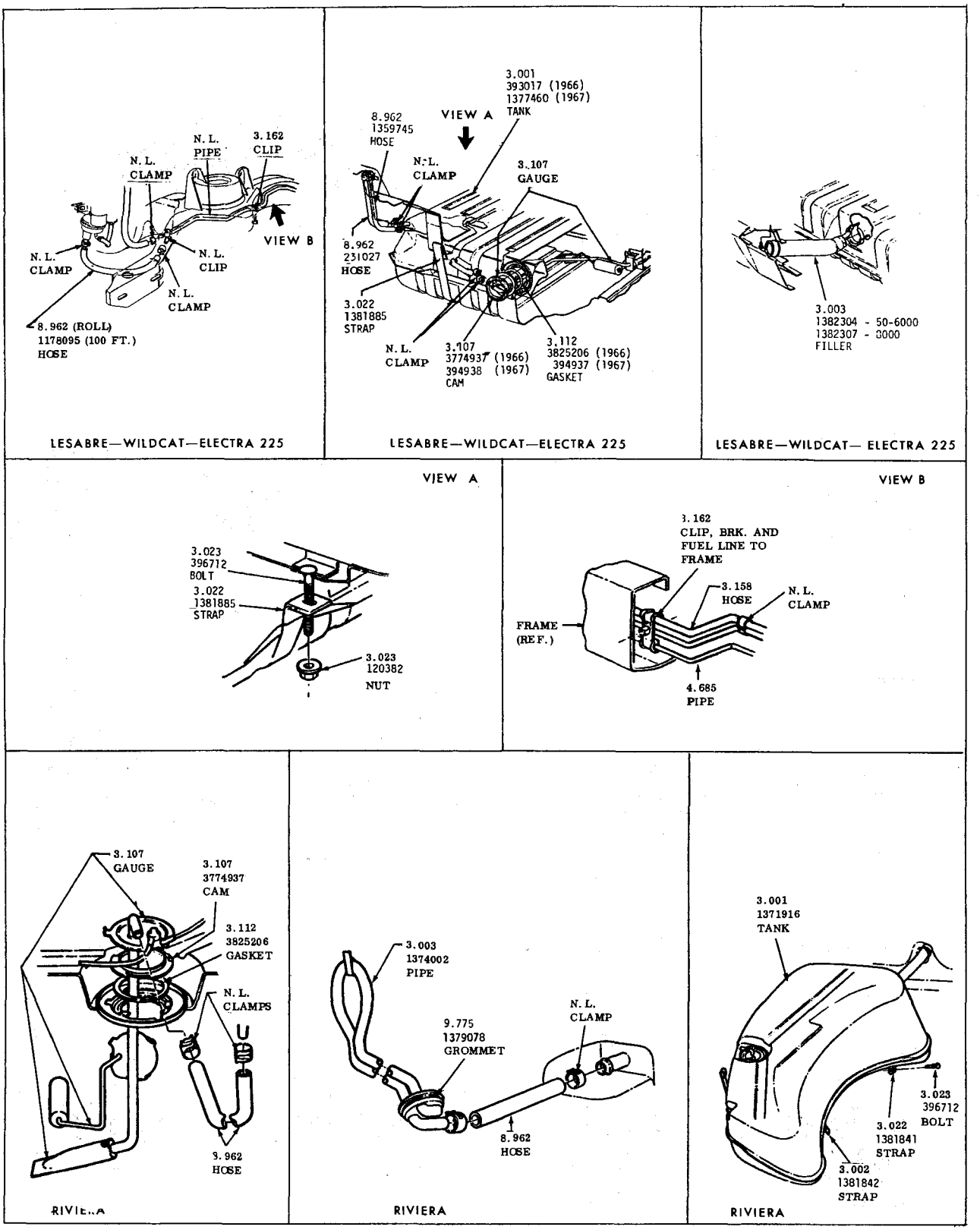

GAS TANK AND ATTACHING PARTS
1966 —LESABRE—WILDCAT—ELECTRA 225— RIVIERA

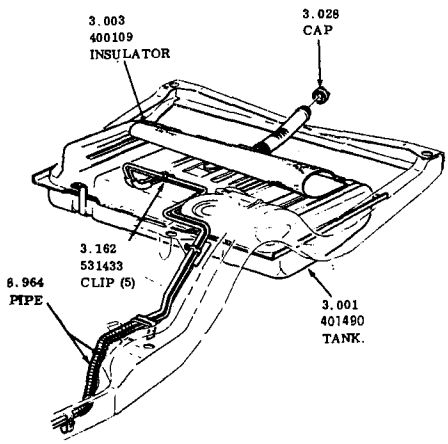

30-4000 EXC. WAGONS

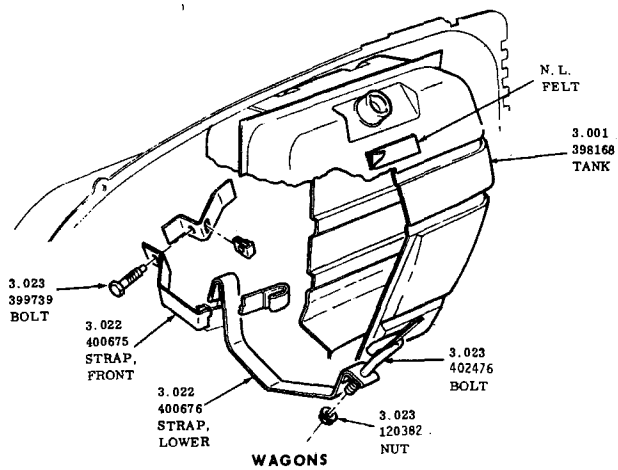

WAGONS

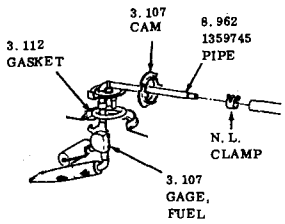

250 CU. IN. ENG

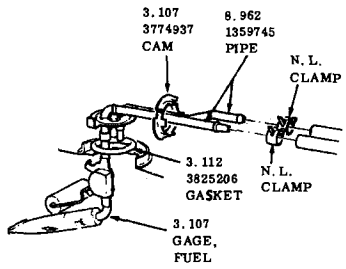

30-4000 EXC. WAGONS

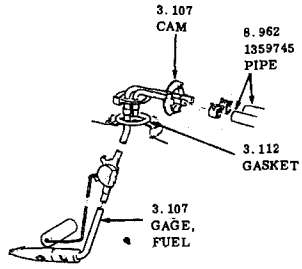

WAGONS

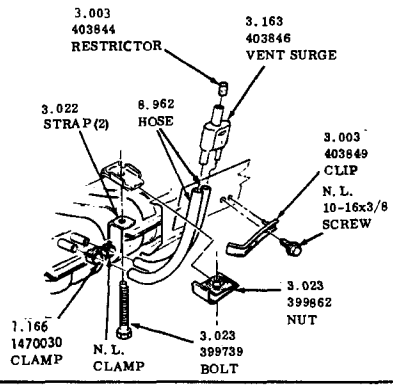

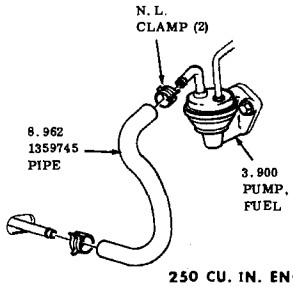

250 CU. IN. ENG.

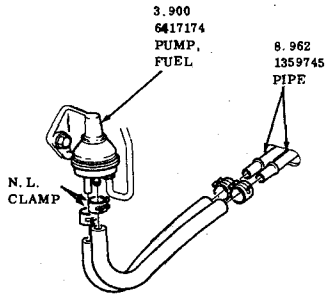

350 CU. IN. ENG.

FUEL SYSTEMS
1968-1970 - 30-4000

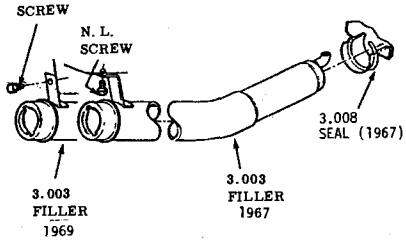

LESABRE—WILDCAT—ELECTRA 225

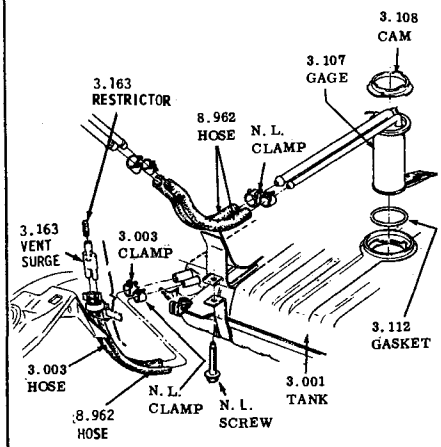

LESABRE—WILDCAT—ELECTRA 225

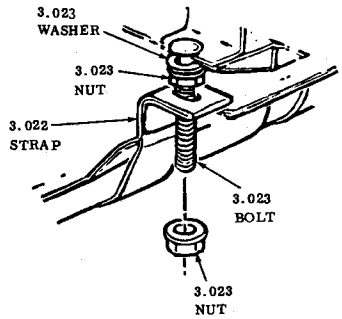

LESABRE—WILDCAT—ELECTRA 225

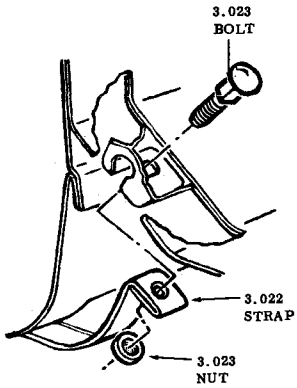

RIVIERA

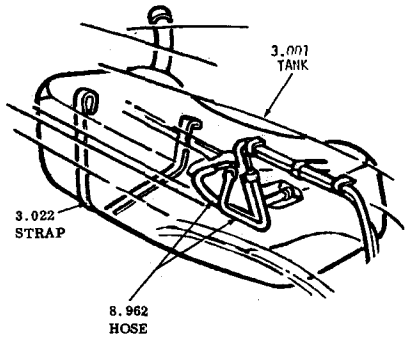

RIVIERA

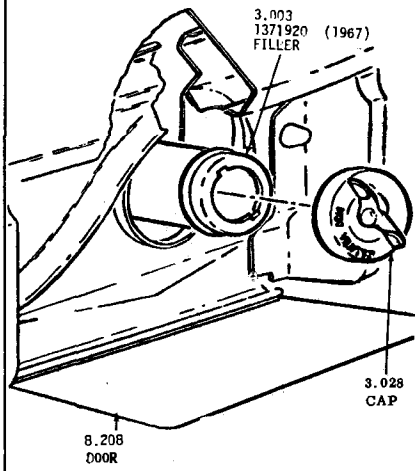

RIVIERA

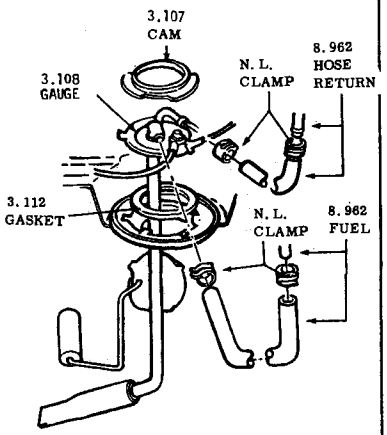

RIVIERA

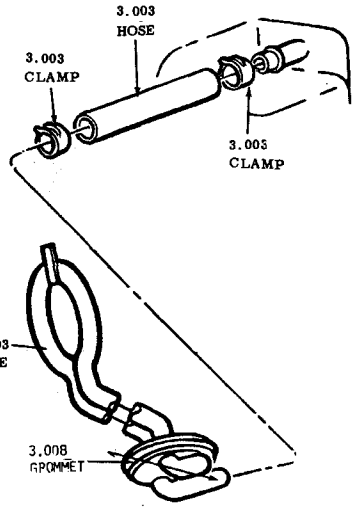

RIVIERA

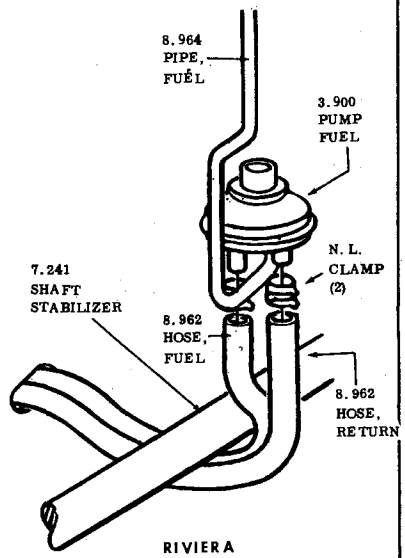

RIVIERA

GAS TANK AND ATTACHING PARTS
1967-1970 LESABRE—WILDCAT—ELECTRA 225—RIVIERA

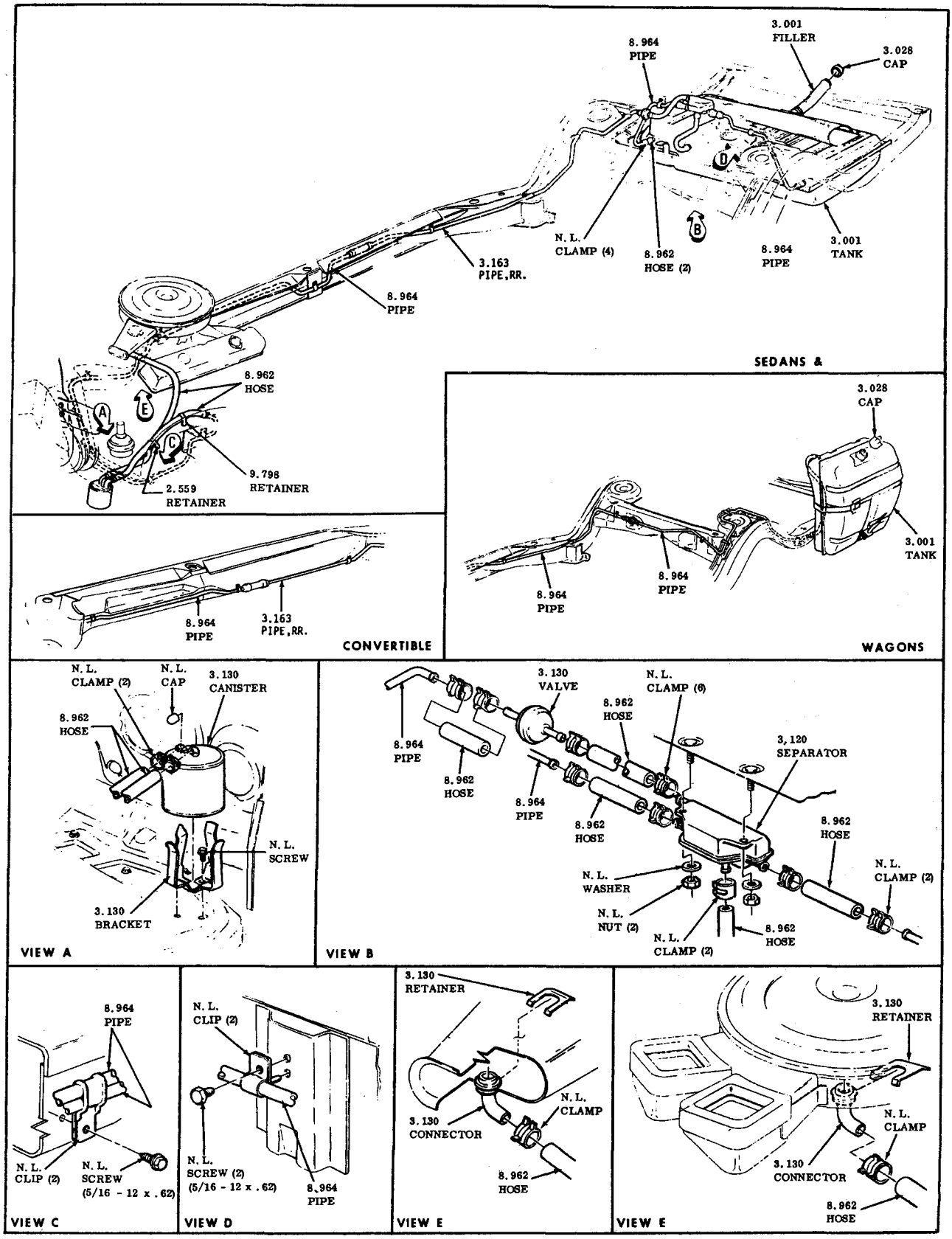

EVAPORATIVE SYSTEM
1970-30-4000

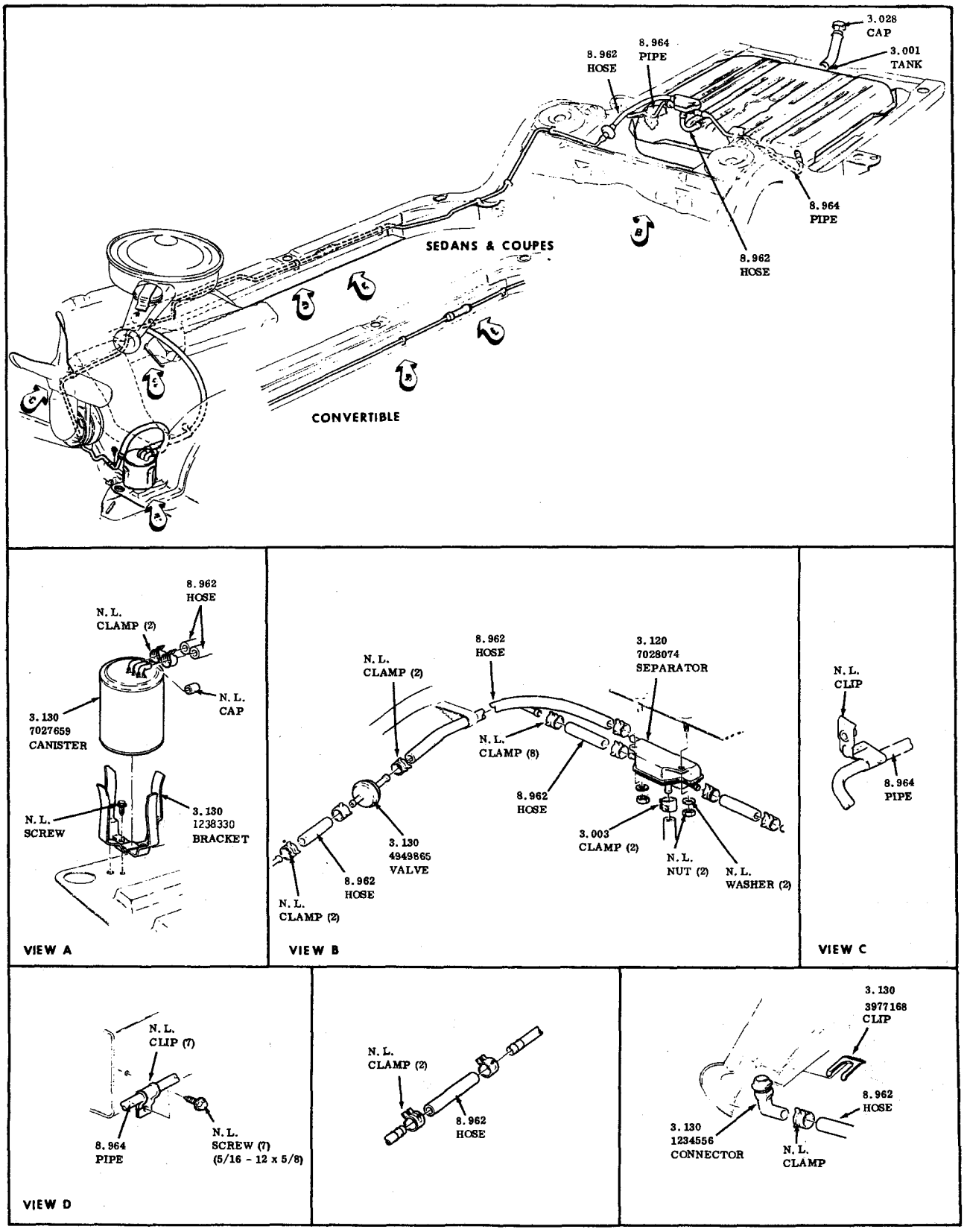

EVAPORATIVE SYSTEM
1970-50-60-8000 EXC. WAGONS

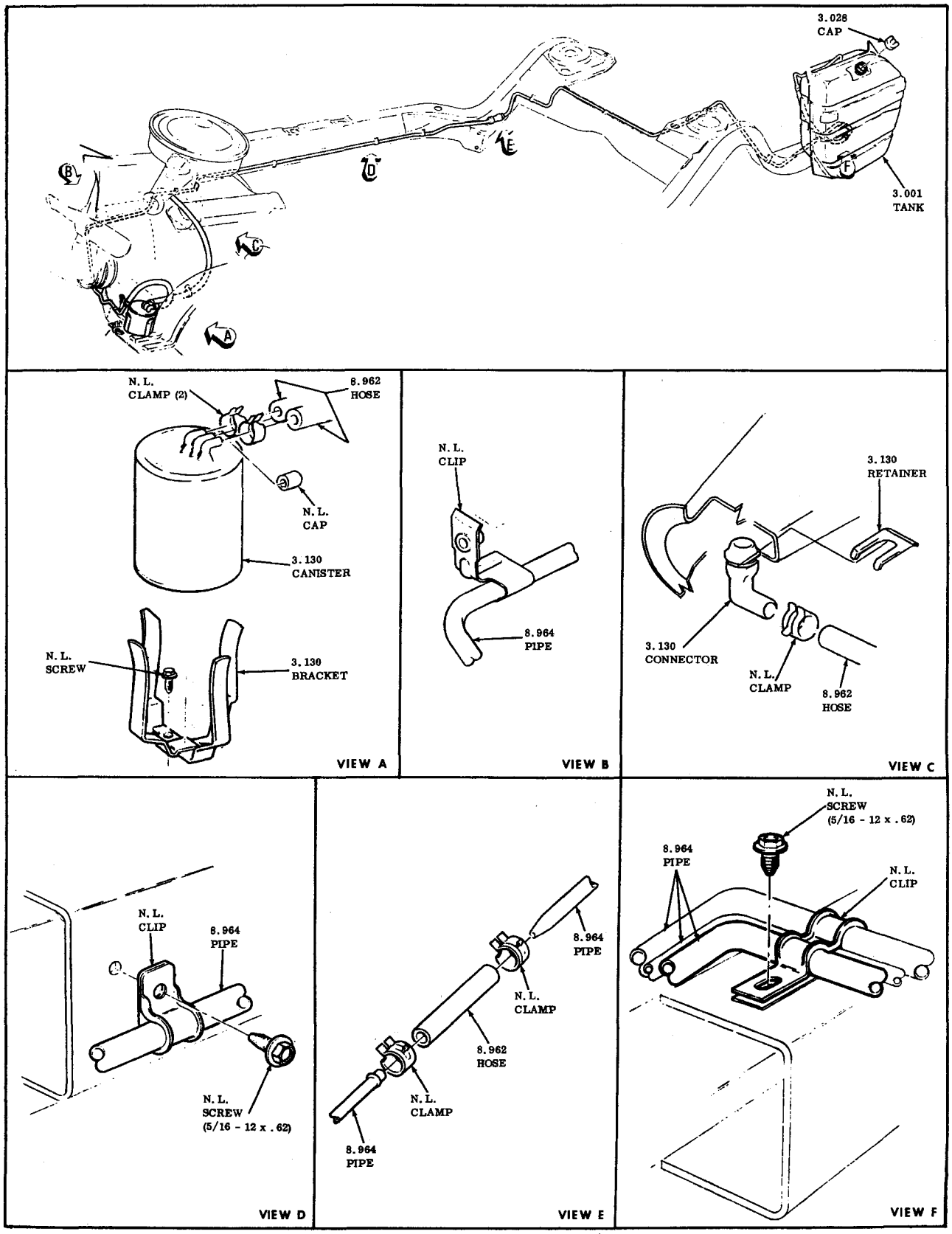

EVAPORATIVE SYSTEM
1970-6000 WAGON

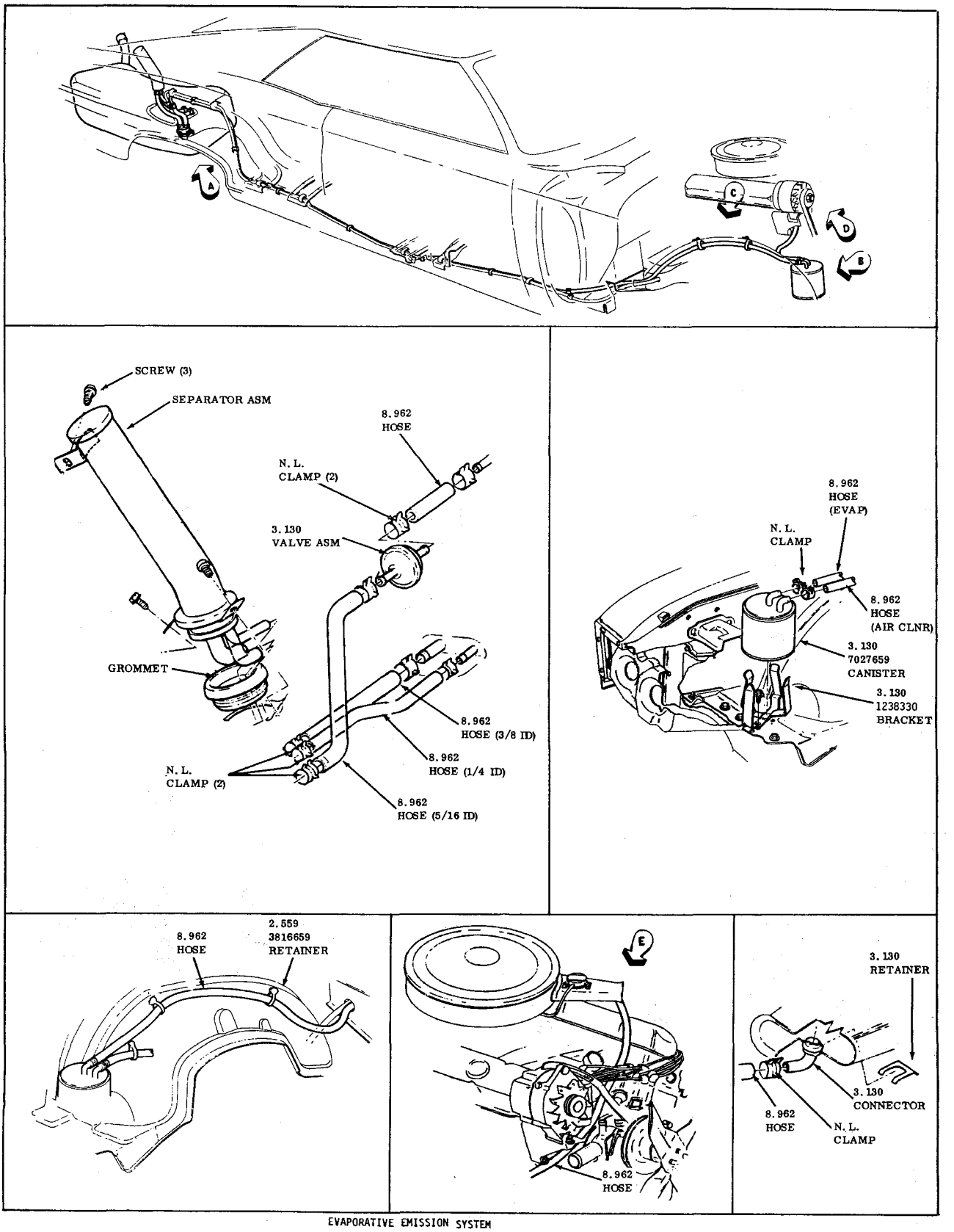

EVAPORATIVE EMISSION SYSTEM

1970-9000

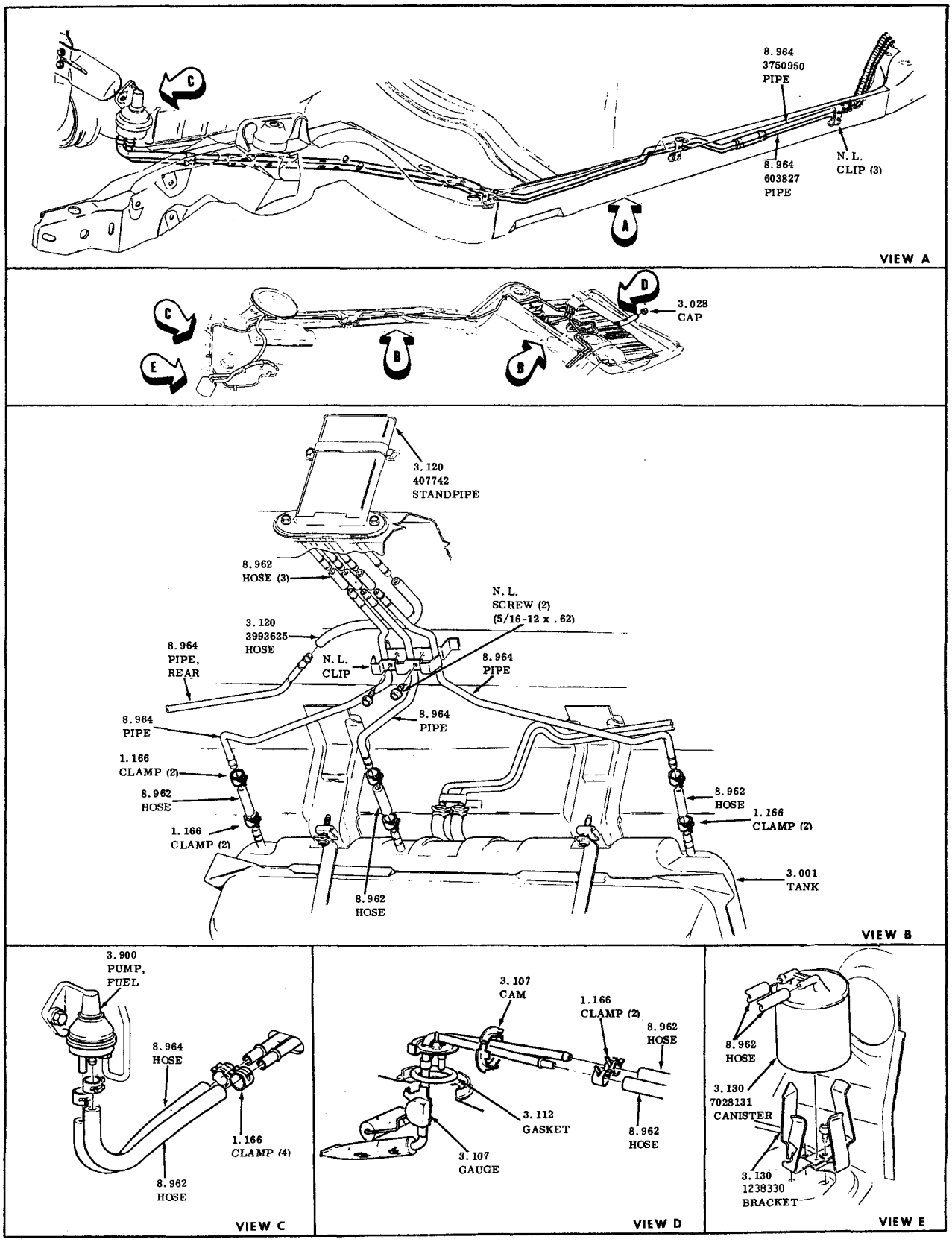

FUEL SYSTEM

1971-1972 30-4000 EXEC. WAGONS

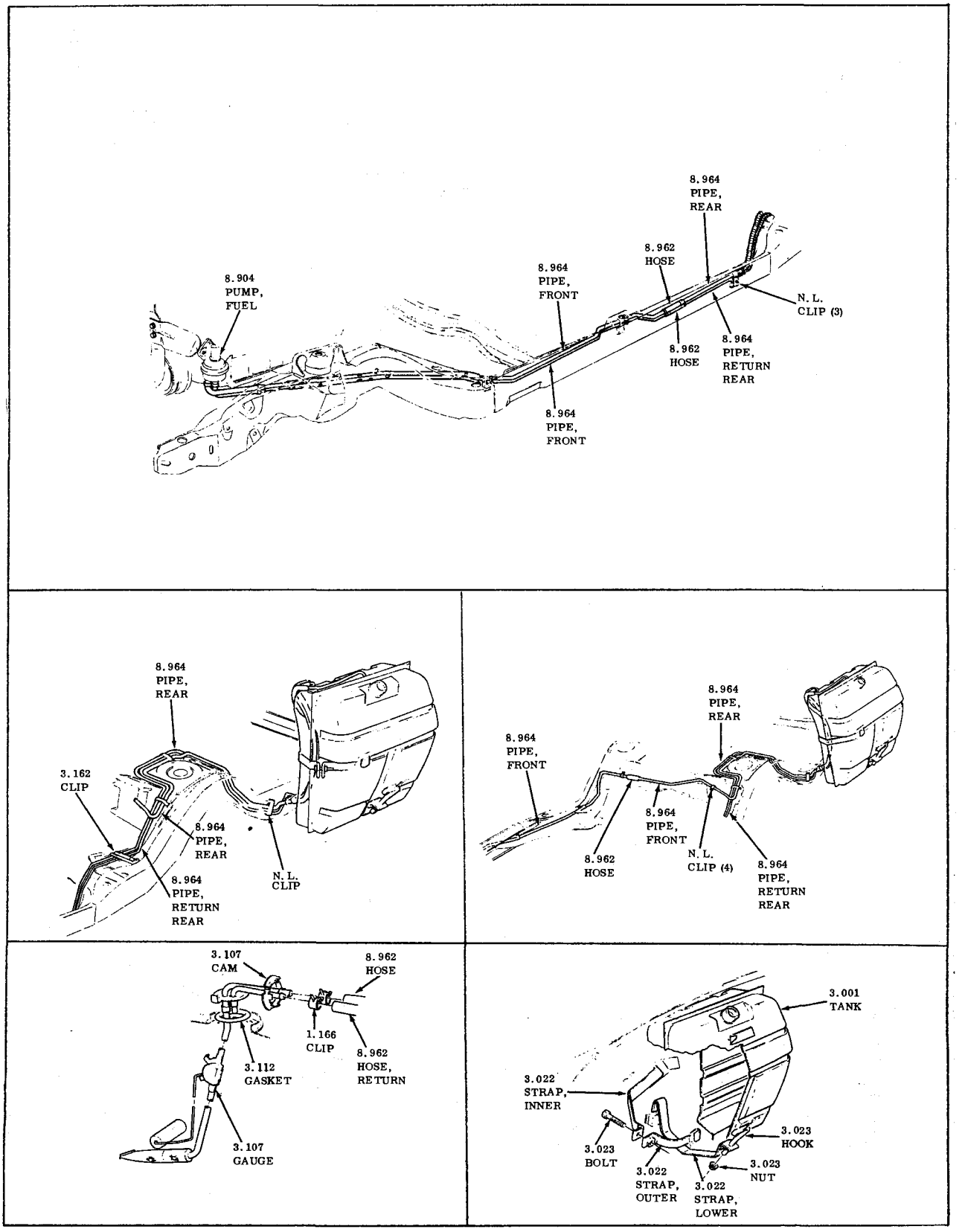

FUEL SYSTEM

1971-1972 3436

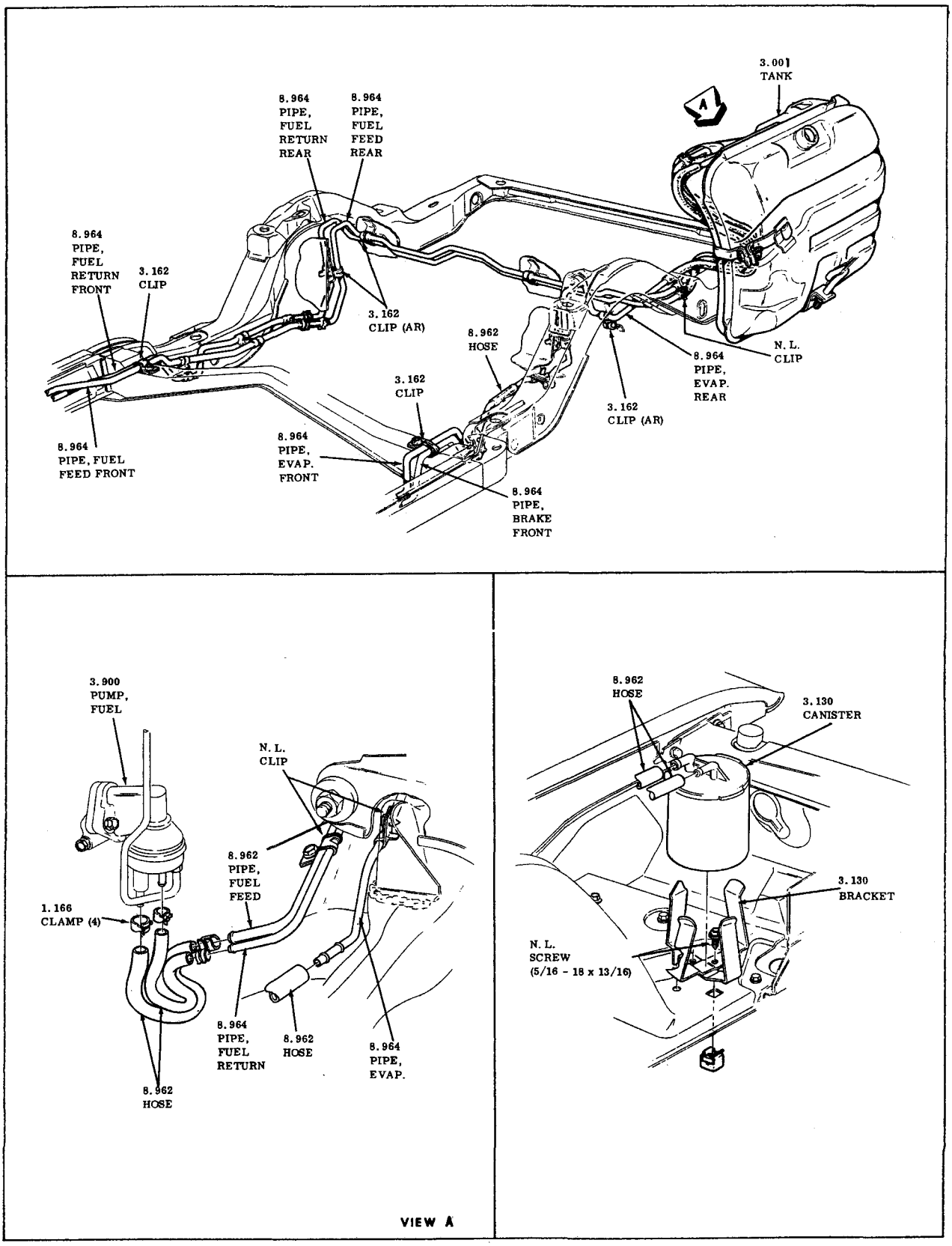

FUEL SYSTEM

1971-1972 6035 - 45

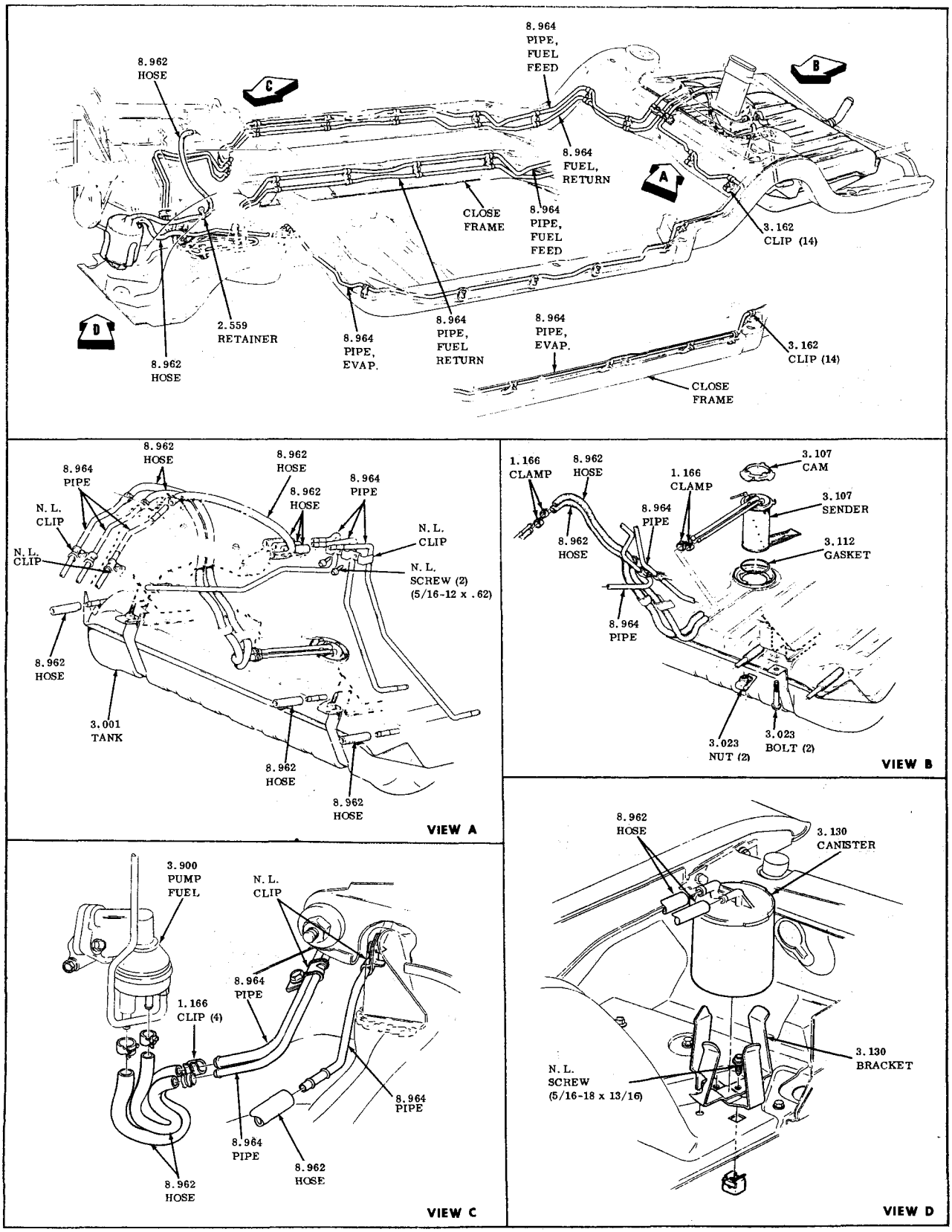

FUEL SYSTEM

1971-197250-66-80-9000

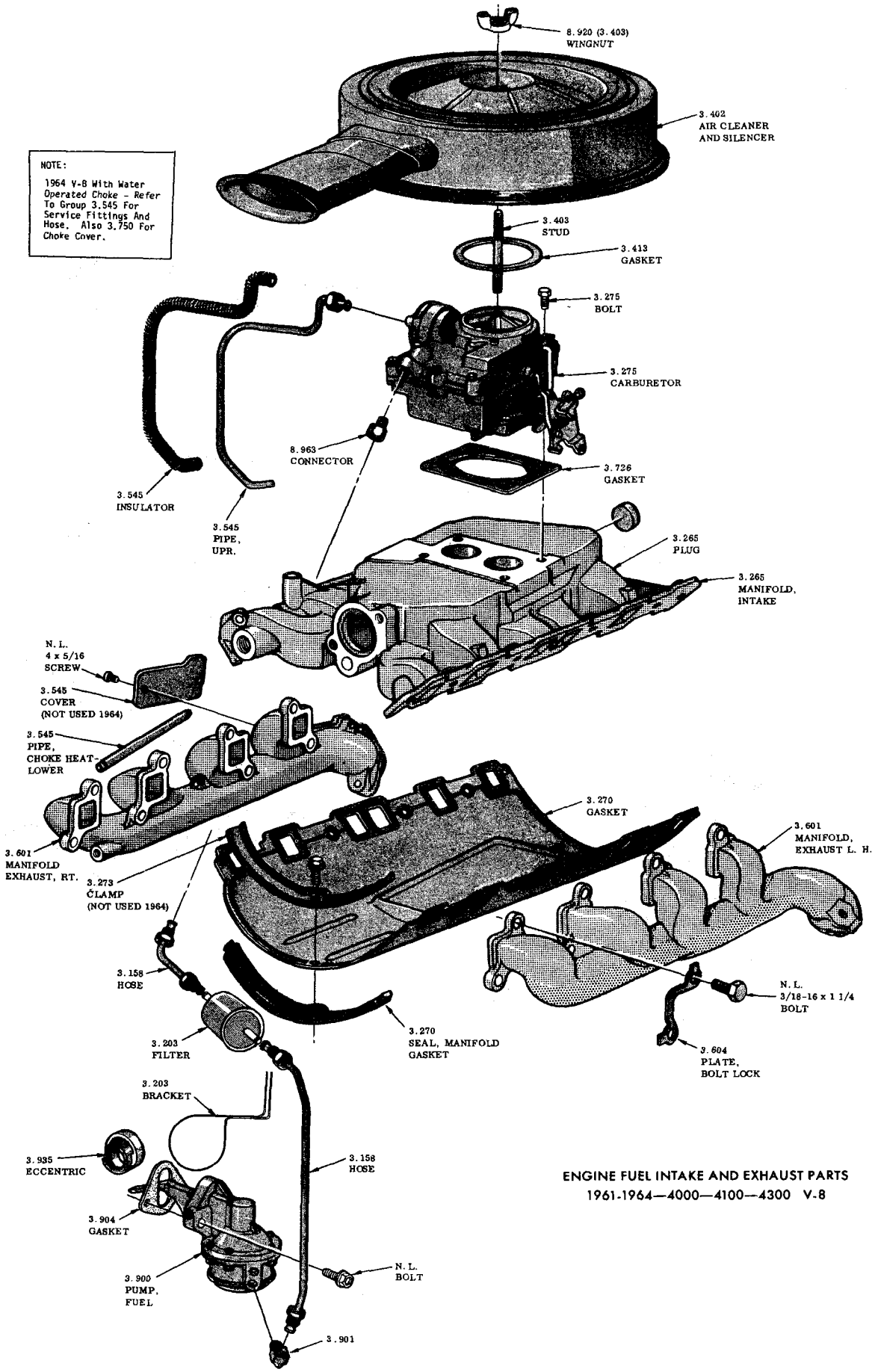

ENGINE FUEL INTAKE AND EXHAUST PARTS
1961-1964—4000—4100—4300 V-8

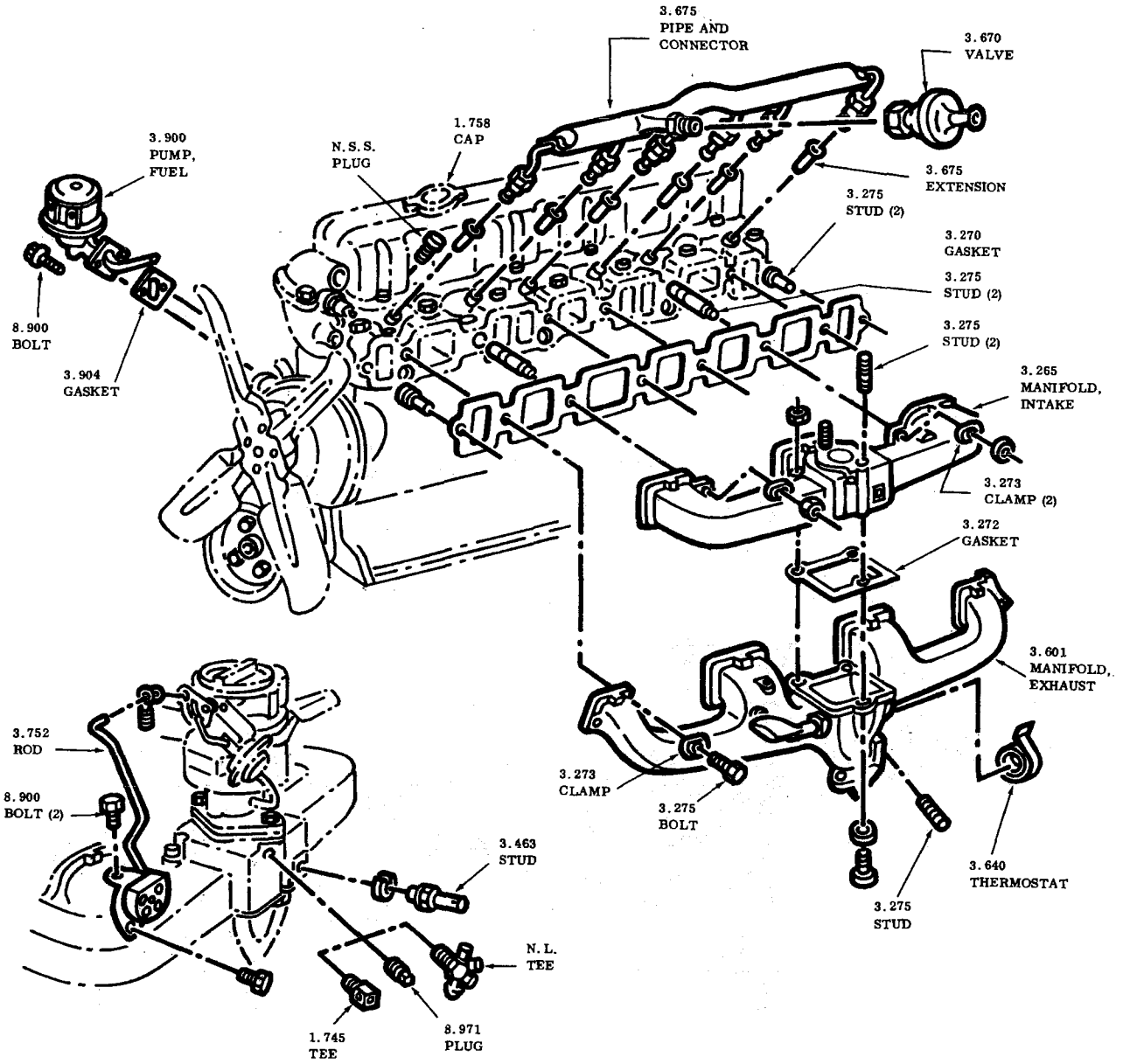

FUEL AND EXHAUST
1968-1971 L-6-250 CU. IN. ENGINE

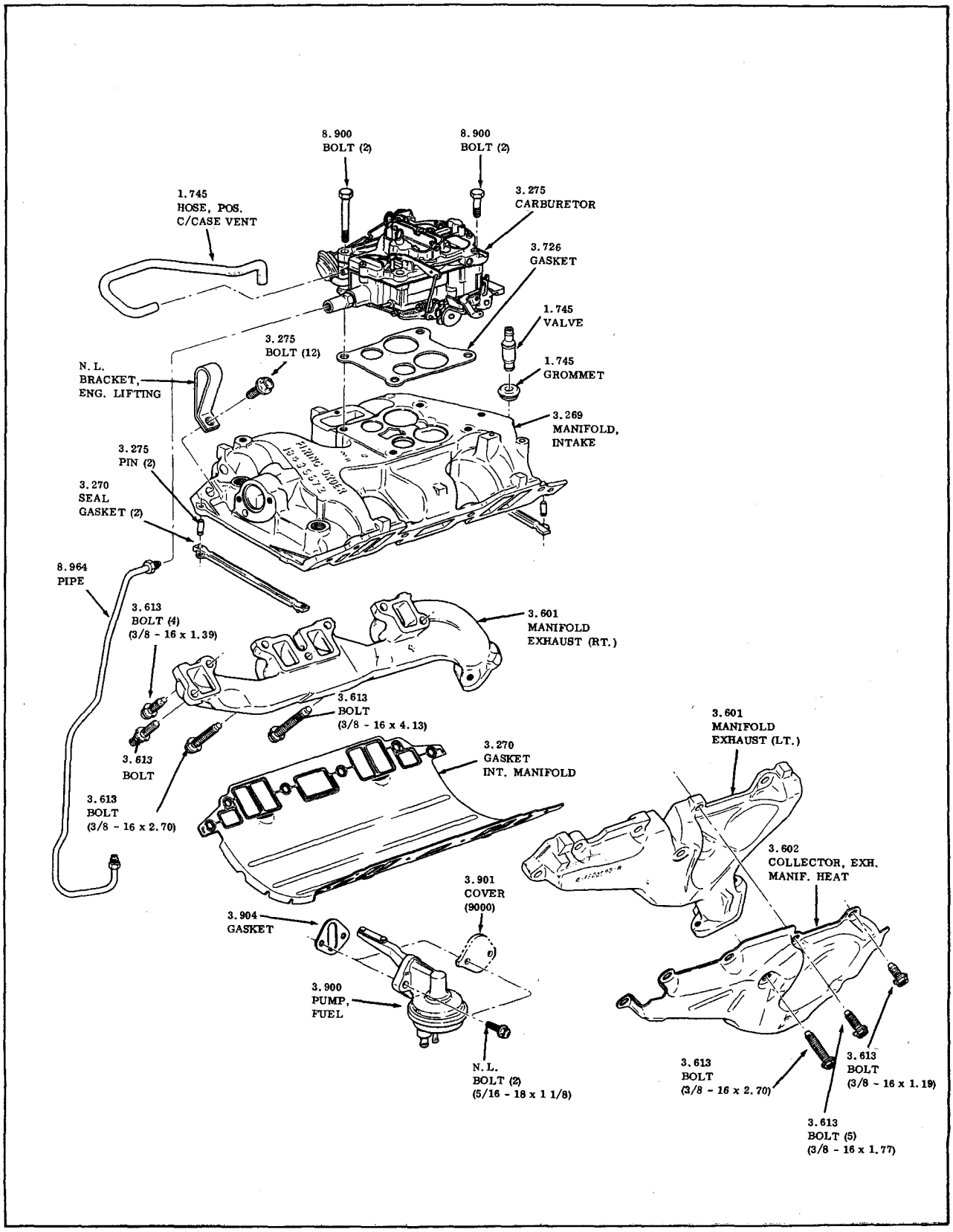

ENGINE FUEL INTAKE AND EXHAUST PARTS
1970-1972 455-CU. IN. ENGINE

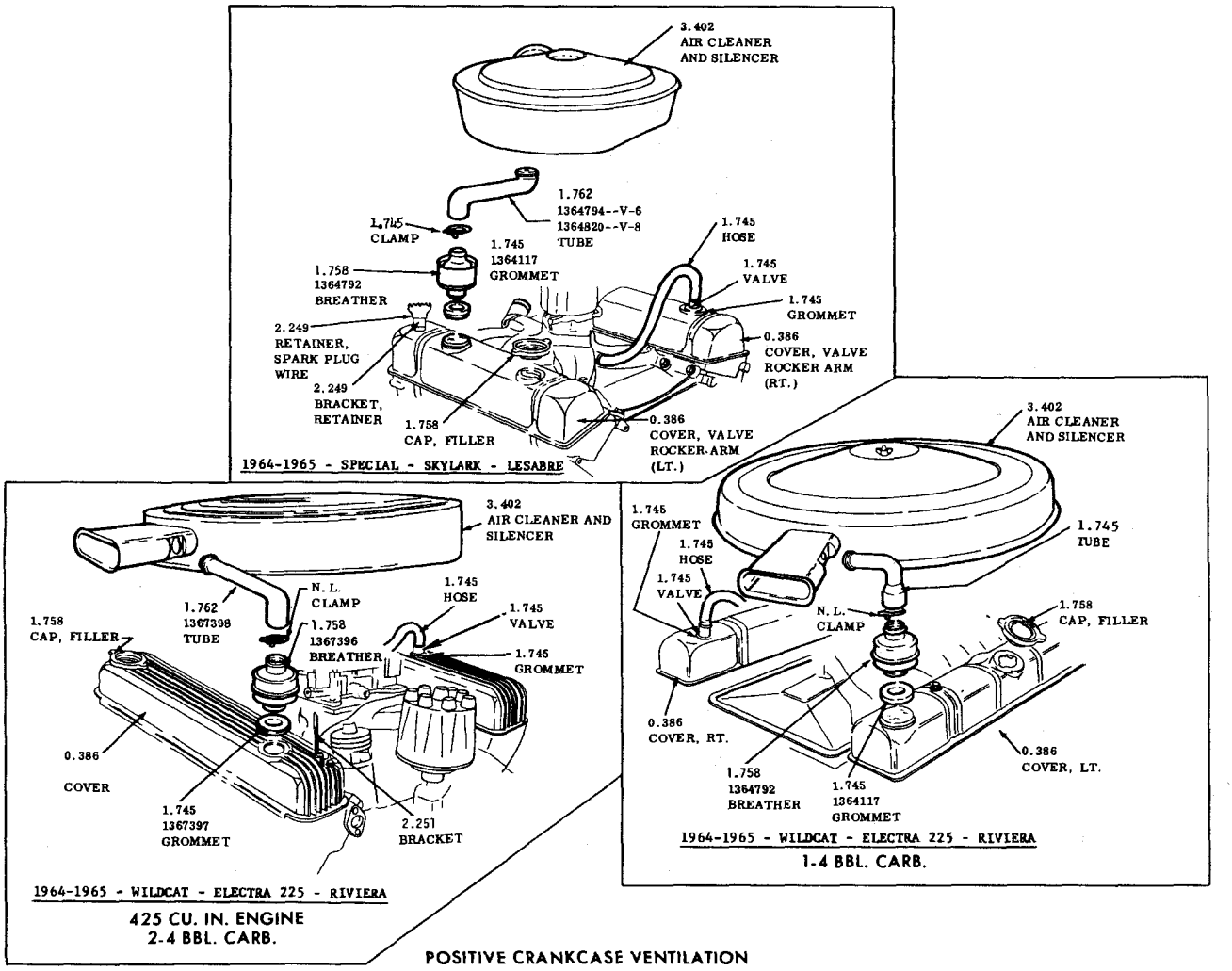

POSITIVE CRANKCASE VENTILATION
1964-1965 CLOSED SYSTEM

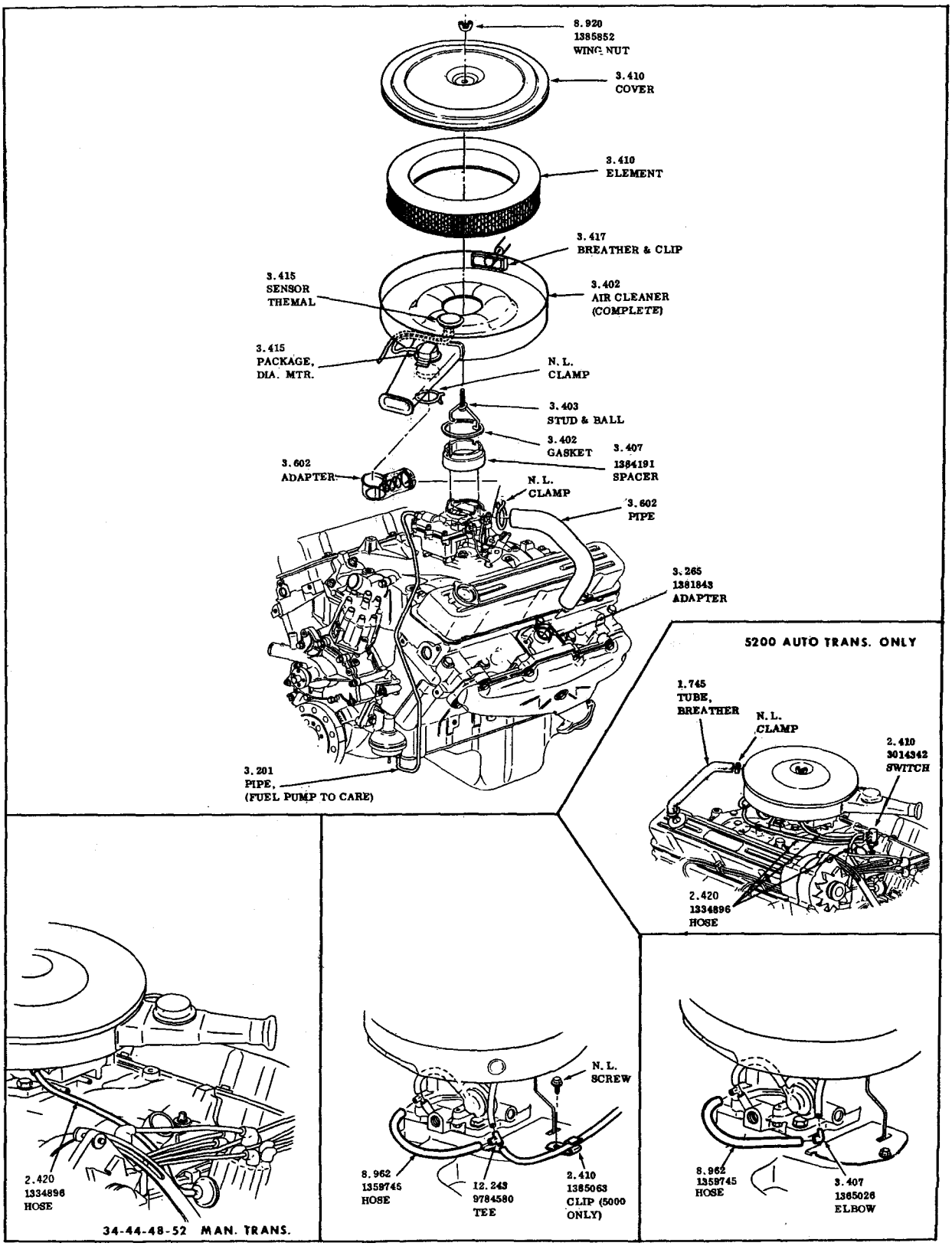

AIR CLEANER AND ATTACHING PARTS
1968-1969-350 CU. IN. ENG.
(2 BBL. CARB.)

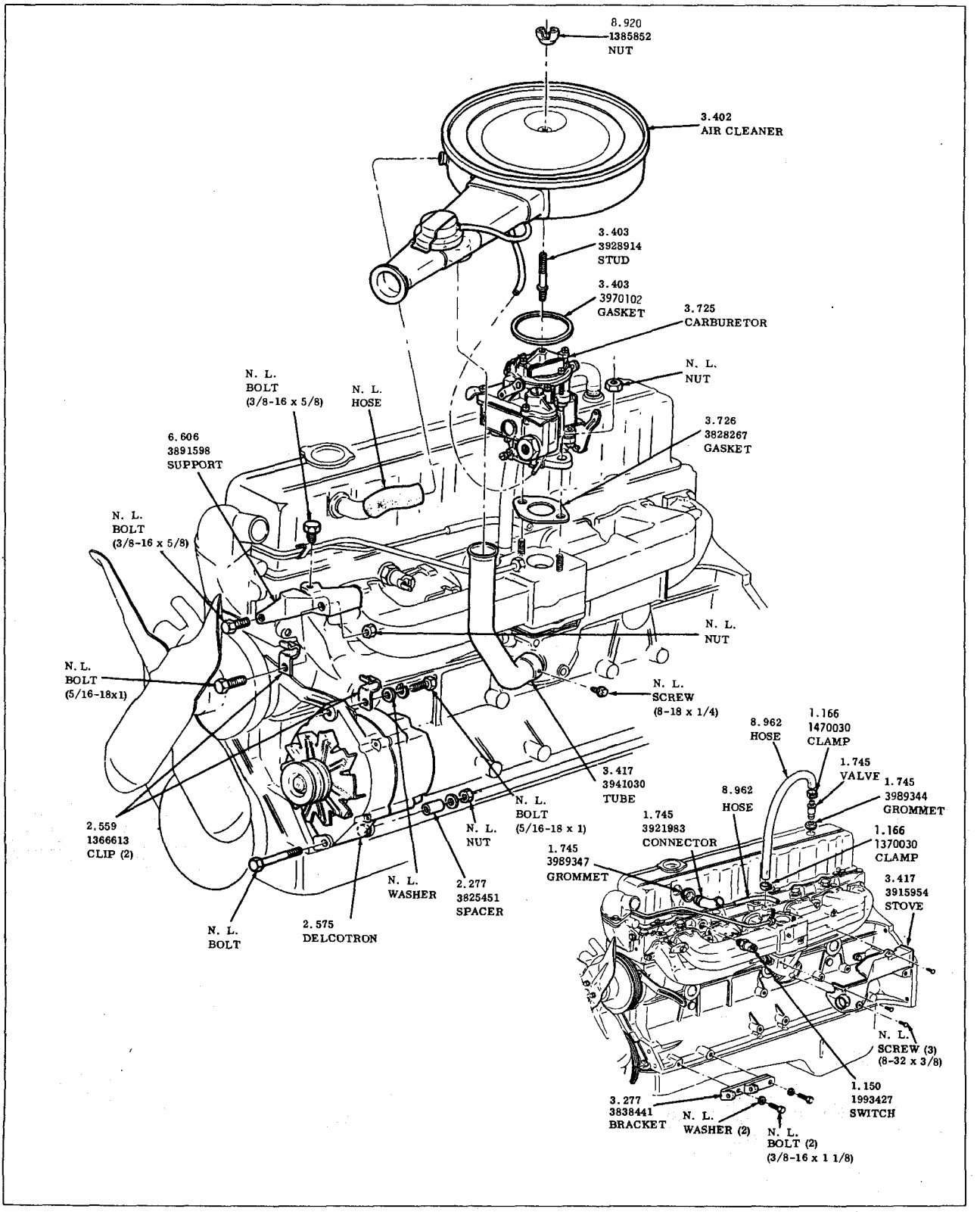

CONTROL COMBUSTION SYSTEM
1969-250 CU. IN. ENGINE

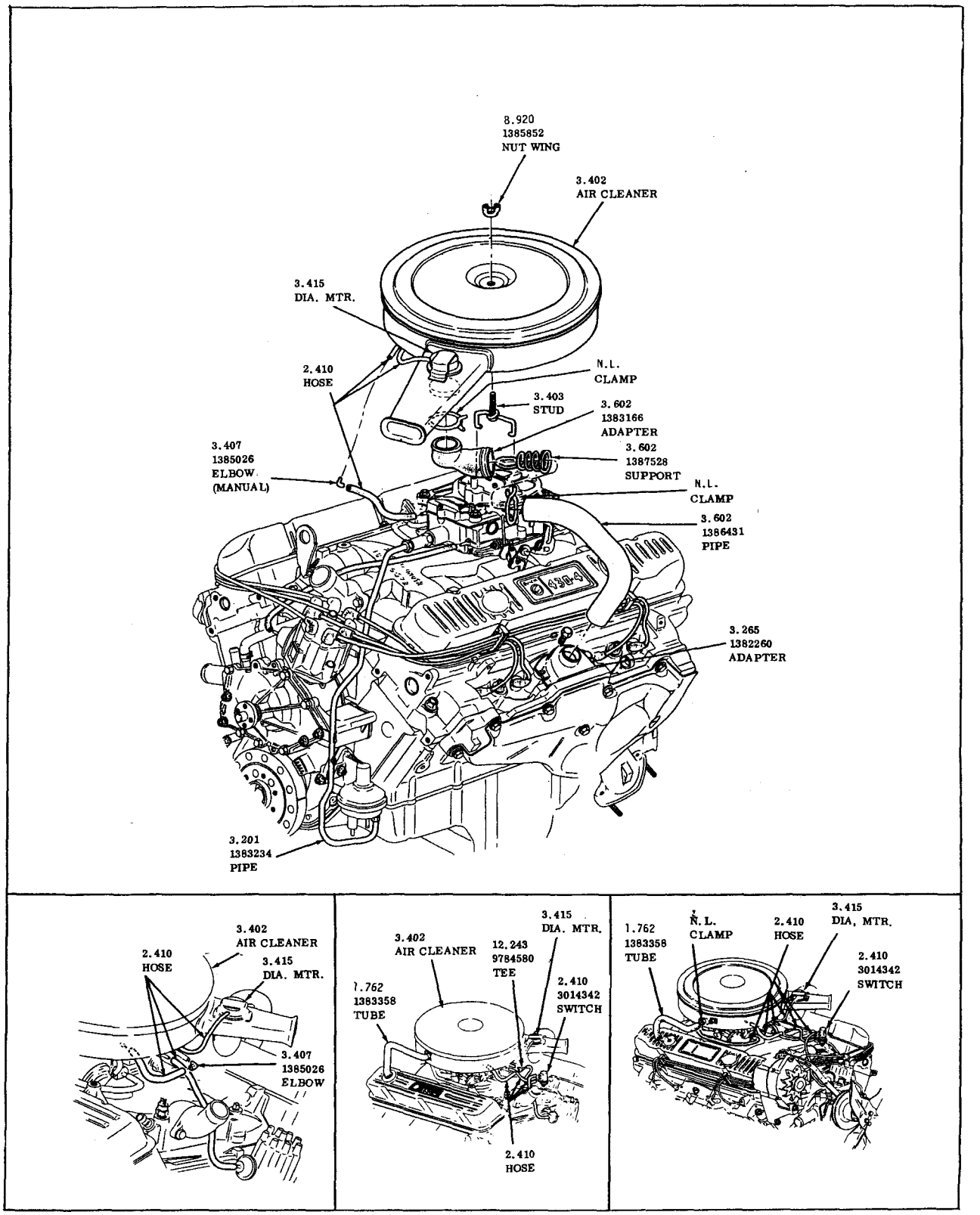

AIR CLEANER & ATTACHING PARTS
1969 - 350-400-430 CU. IN. ENG.
(4 BBL. CARB.)

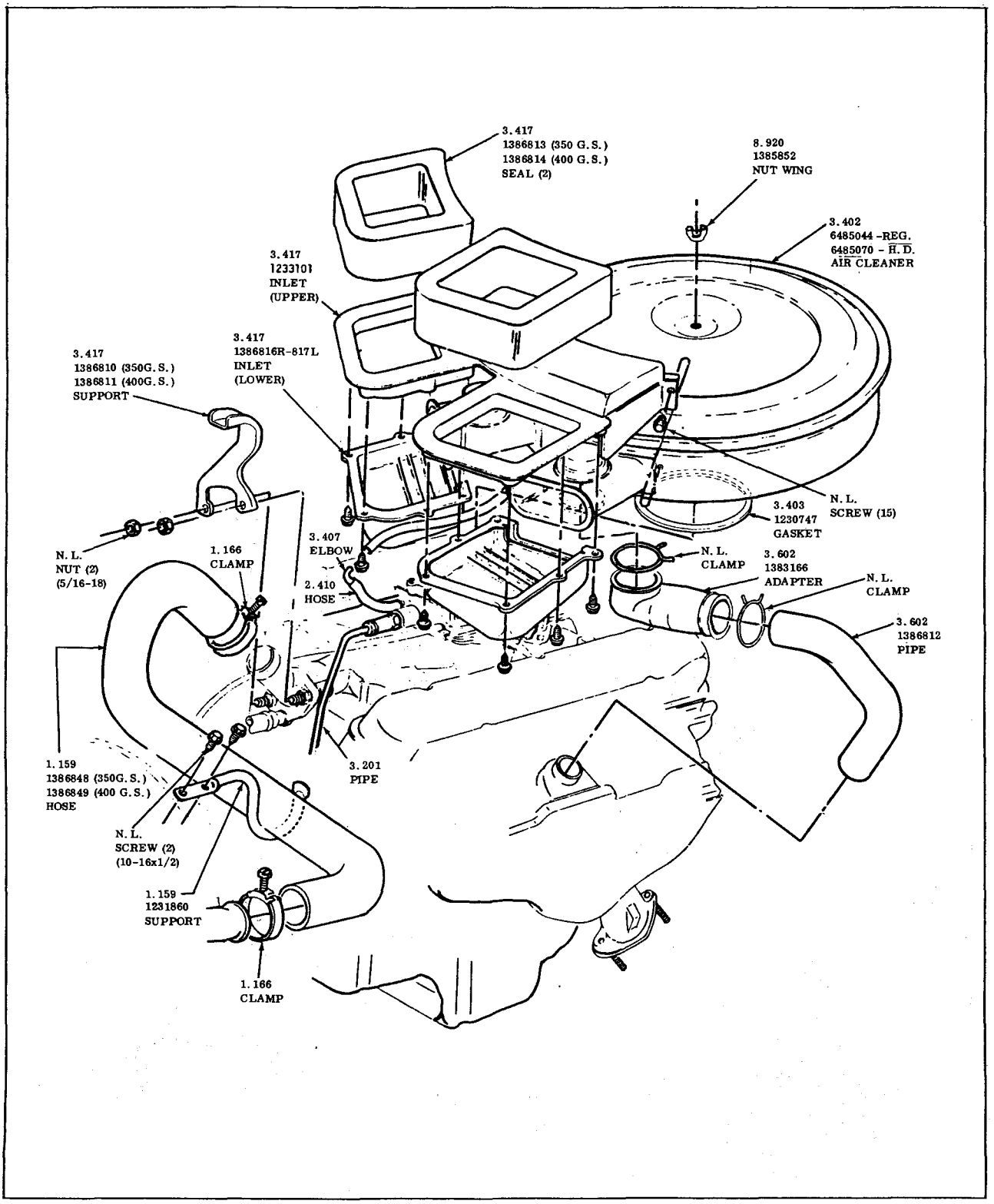

AIR CLEANER COLD AIR INLET
1969 - 350-400 CU.IN ENG. (GRAN SPORT)

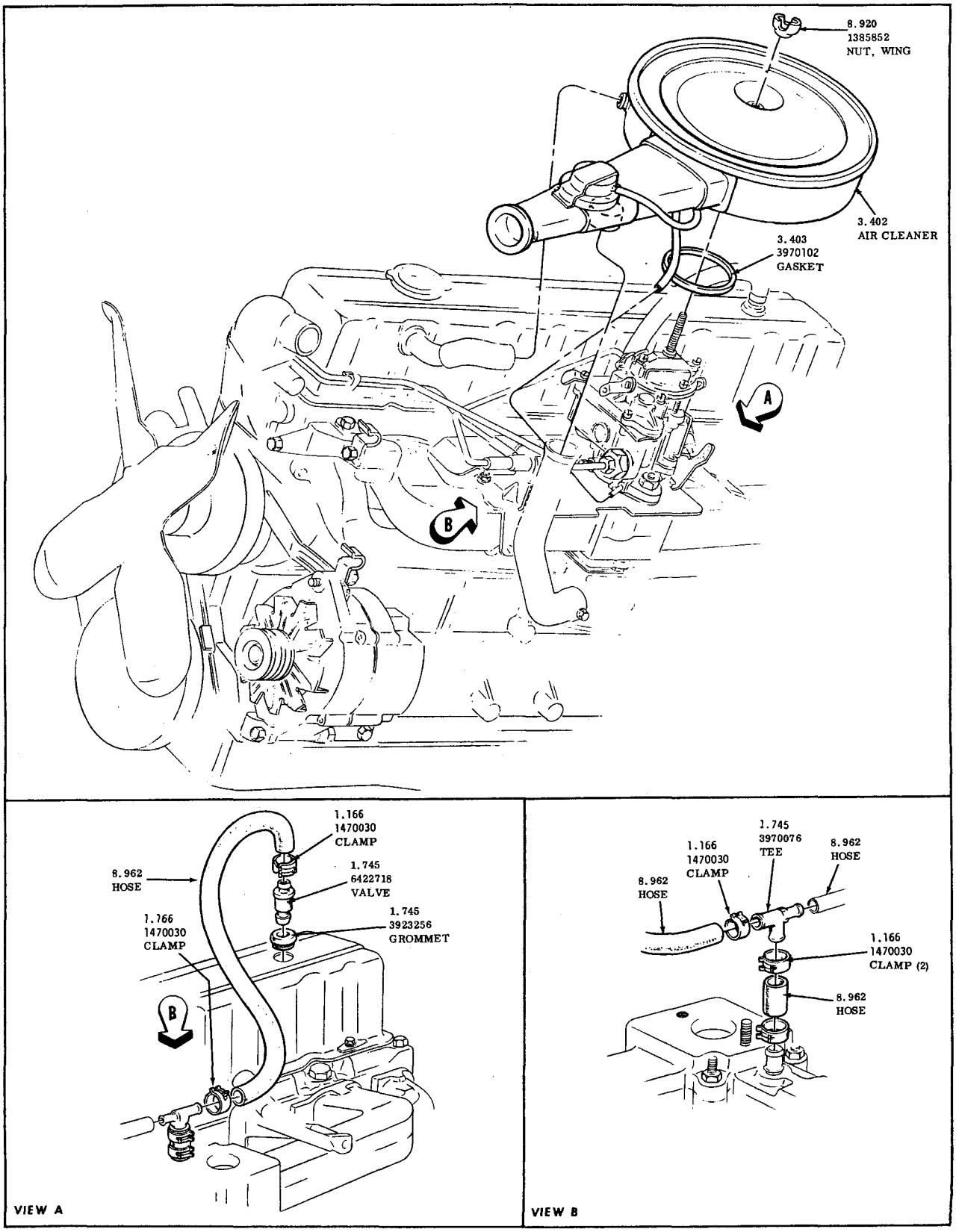

AIR CLEANER
1970-1971 250-CU. IN. ENGINE

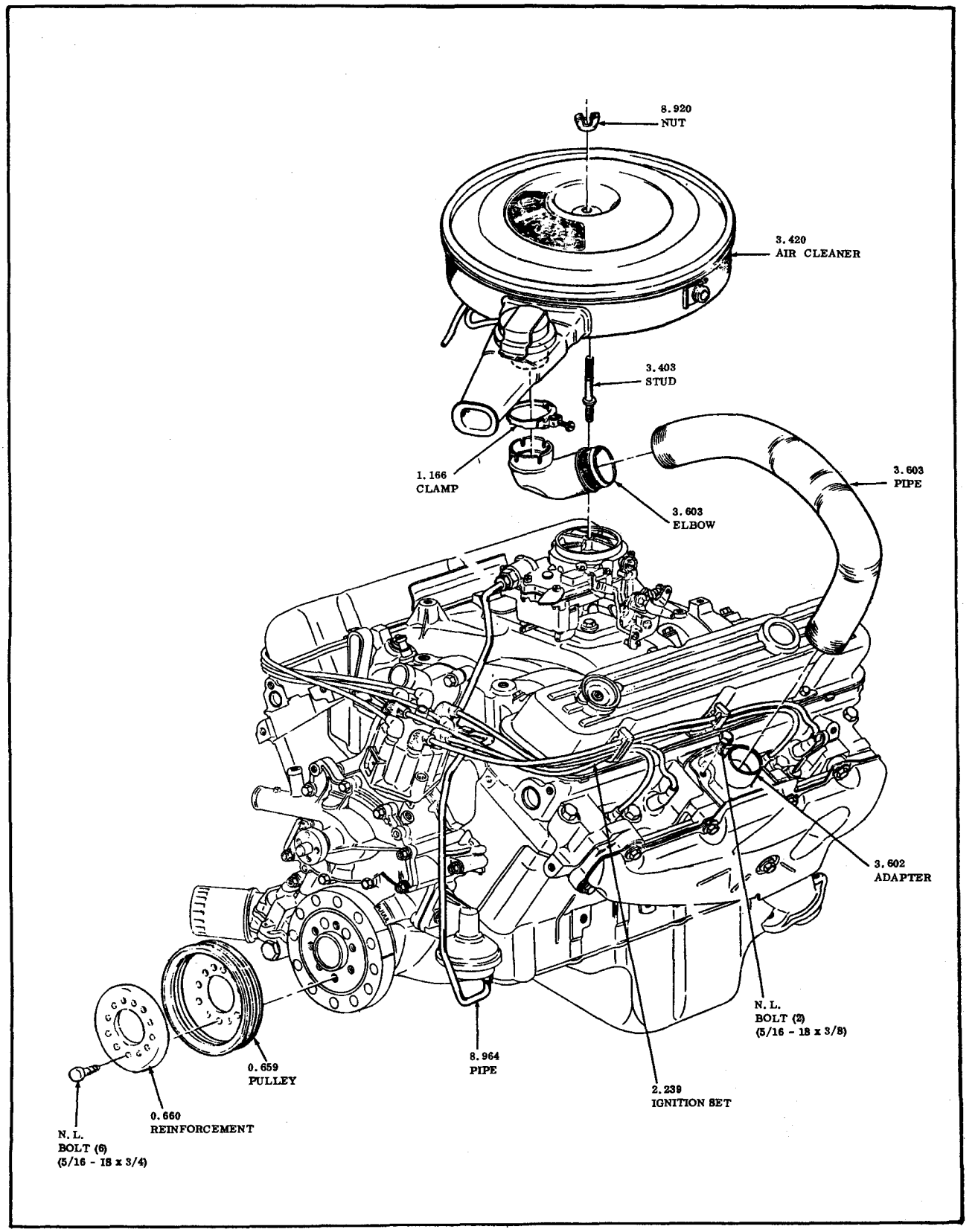

AIR CLEANER
1970-1972 350 CU. IN. ENG.

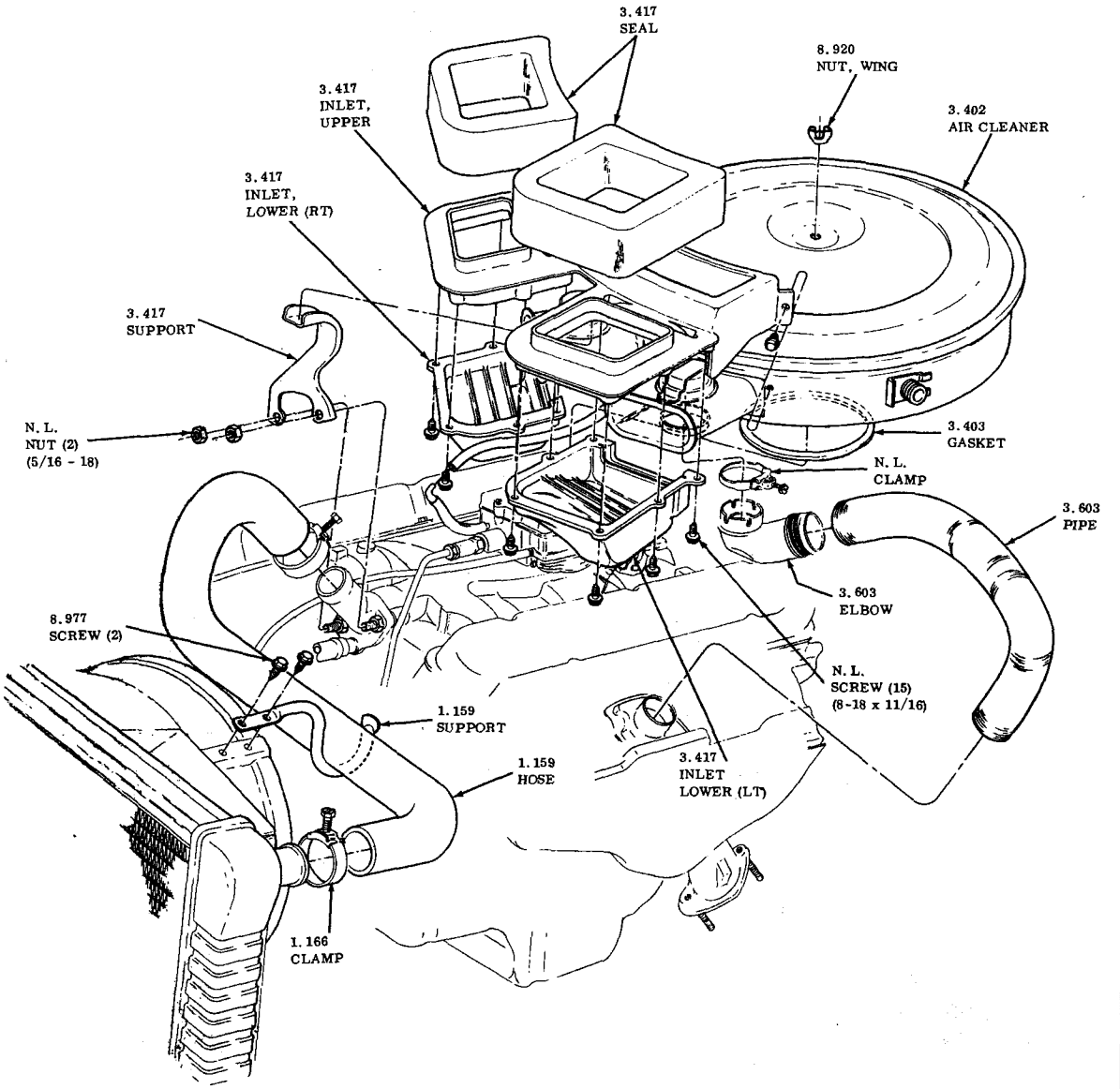

AIR CLEANER
DUAL SNORKEL
1970-1972 30-4000 G.S.

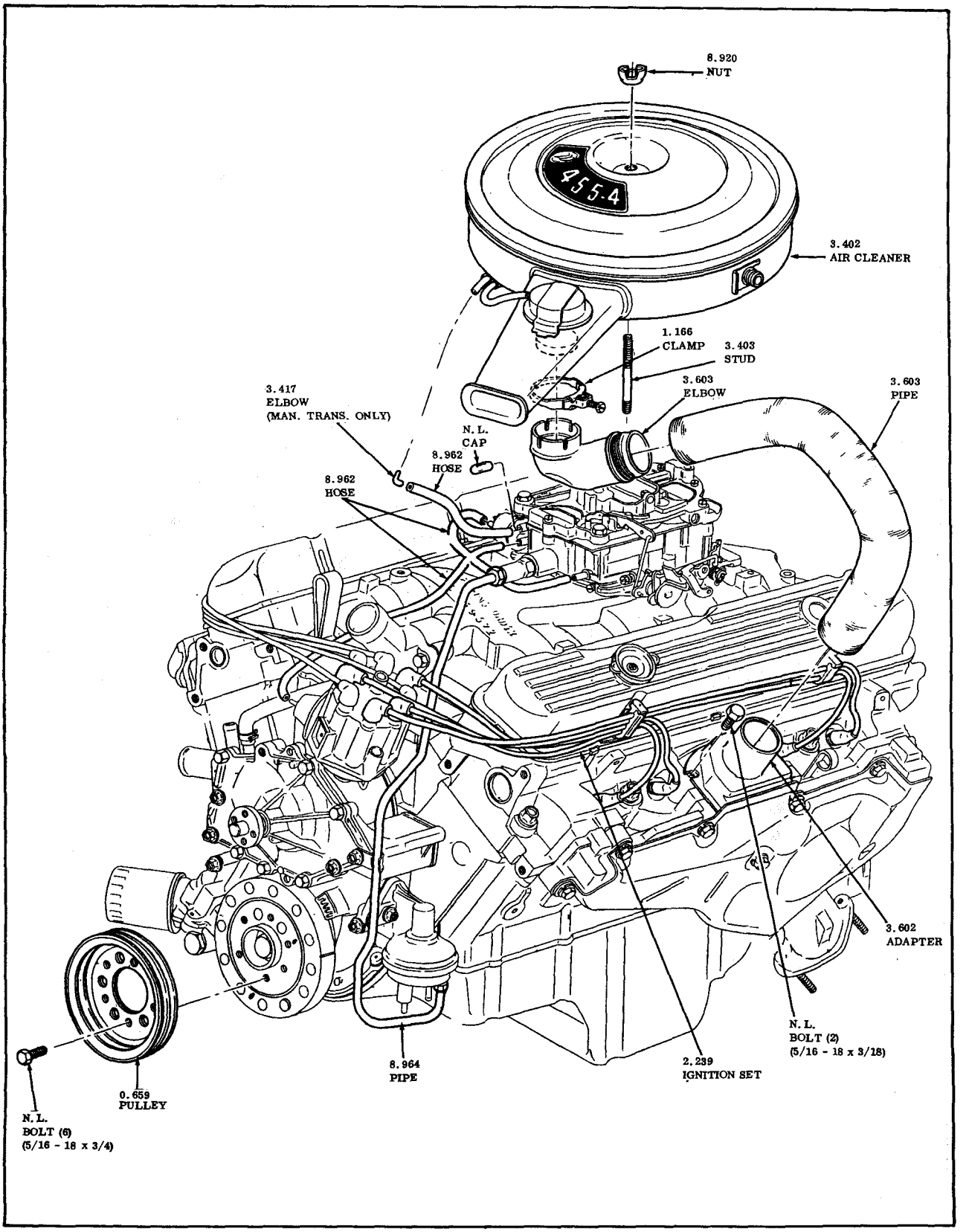

AIR CLEANER
1970-1972 455 CU. IN. ENGINE

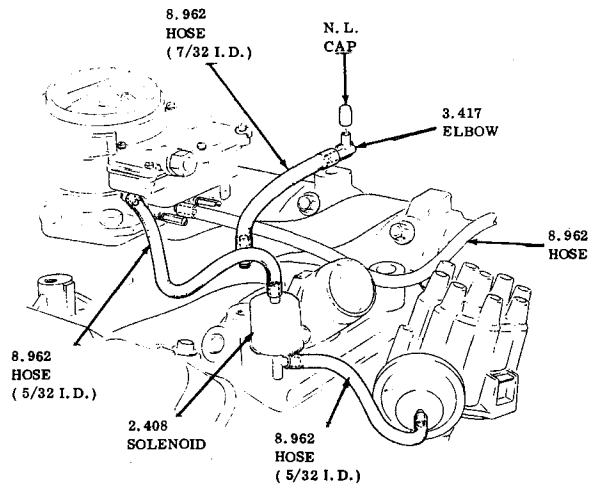

350 CU. IN. ENG. 2 BBL. (LESS H.D. COOLING)

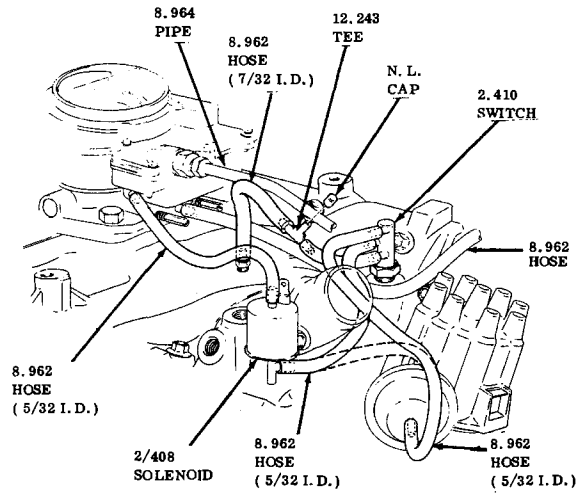

350 CU. IN. ENG. 2 BBL. (H.D. COOLING)

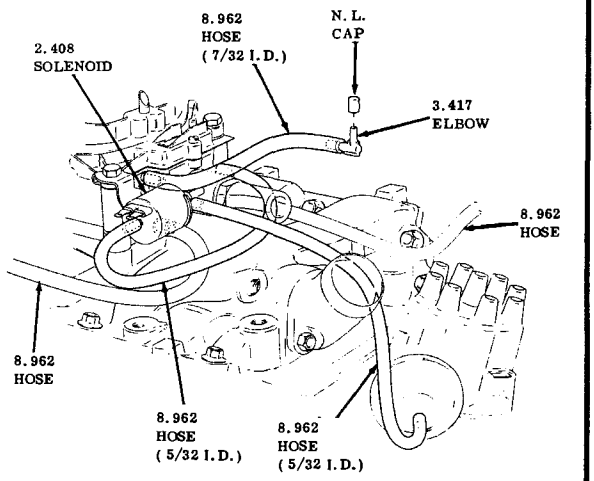

350 CU. IN. ENG. 4 BBL. (LESS A/C OR H.D.

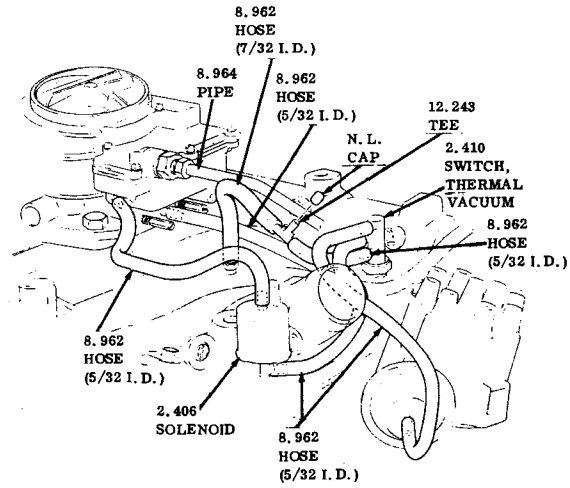

350 CU. IN. ENG. 2 BBL. (ALL)

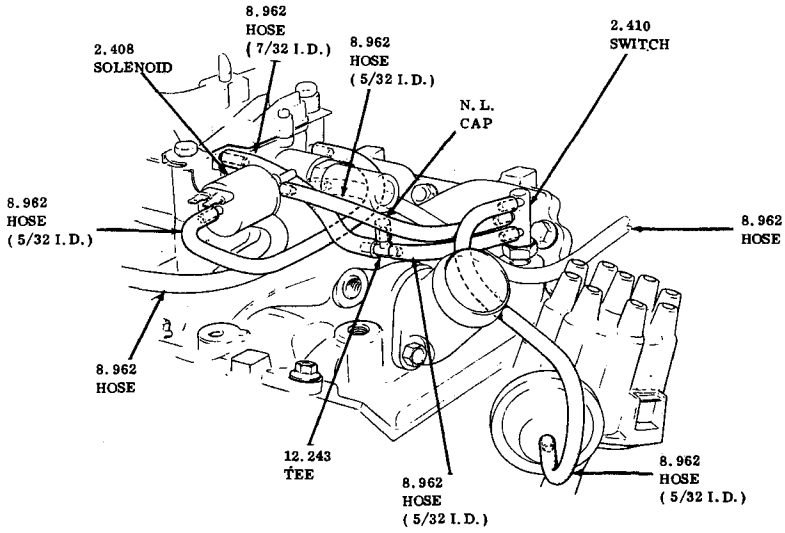

350-455 CU. IN. ENG. (ALL)

VACUUM TUBE ROUTING - ENGINE FRONT
1971 - ALL

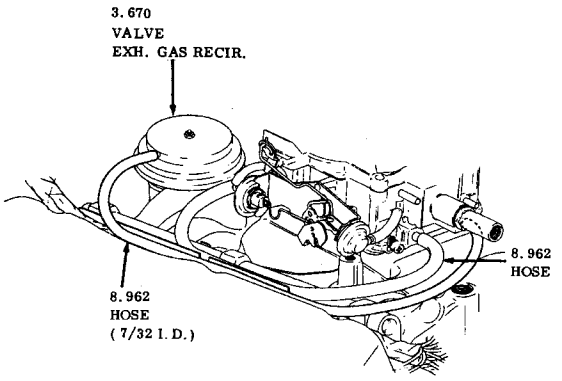

30-40-50-6000 350-455 CU. IN. ENG.

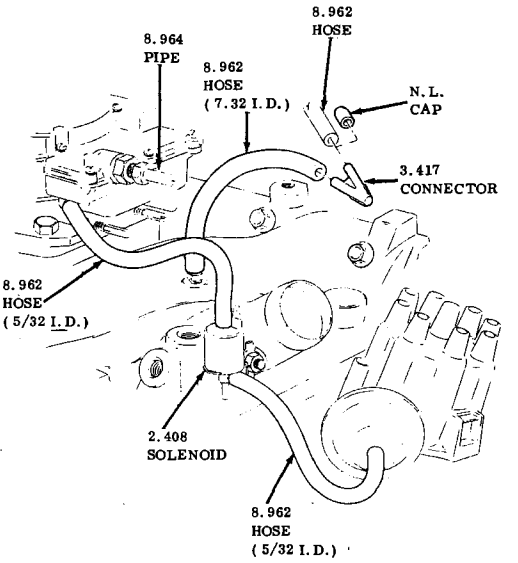

350 CU. IN . ENG. 2 BBL. LESS A/C OR H.D.

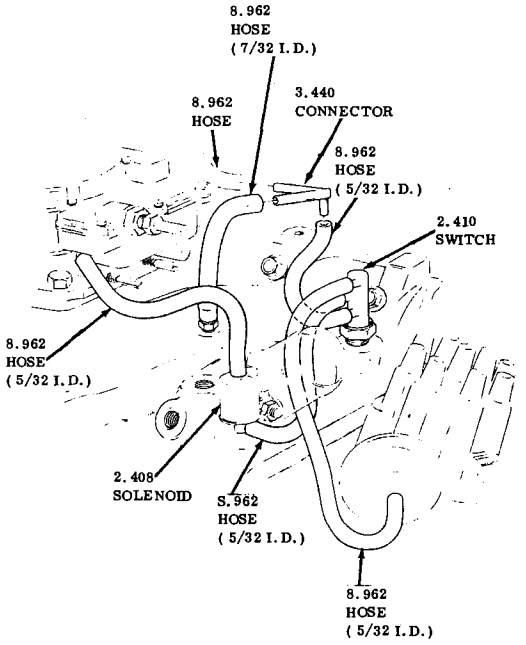

350 CU. IN. ENG. 2 BBL H.D. COOL. LESS A/C

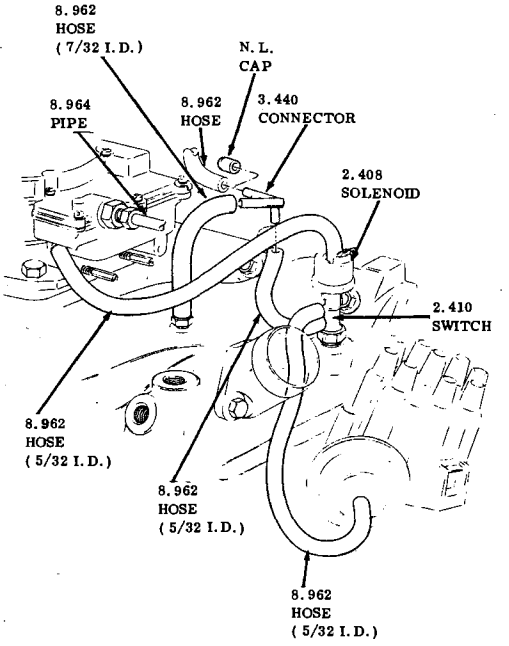

350 CU. IN. ENG. 2 BBL. A/C

VACUUM TUBE ROUTING
2 BBL. CARB.
1972 - ALL

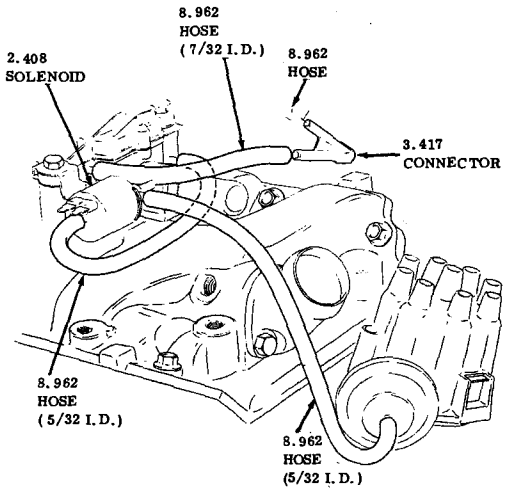

350 CU. IN. ENG. 4 BBL. LESS A/C OR H.D. COOLING

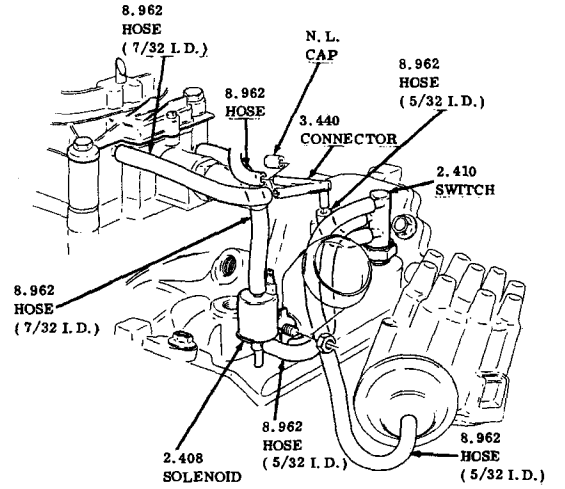

G.S. 350 CU. IN. ENG. A/C

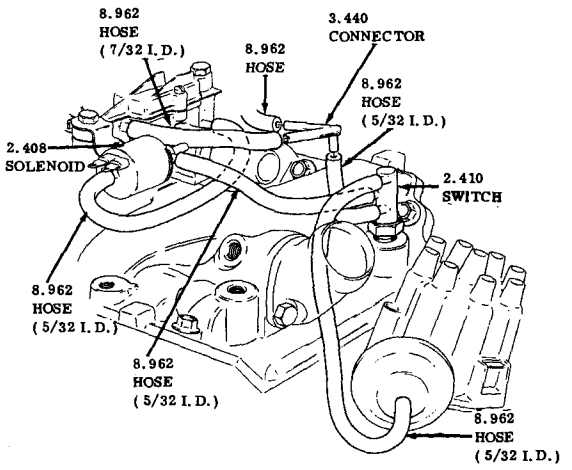

350 CU. IN. ENG. 4 BBL. H.D. COOL LESS A/C

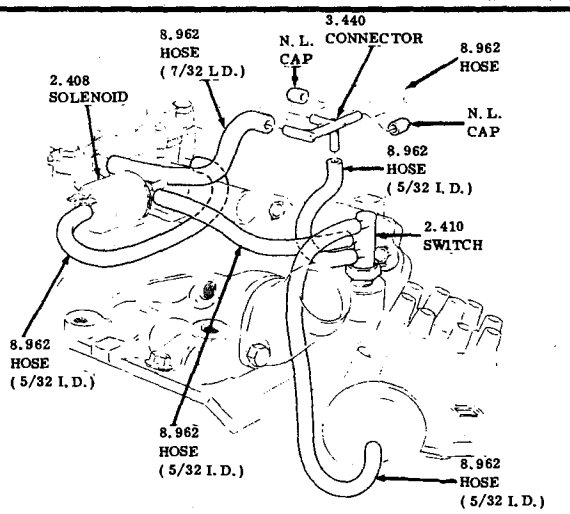

455 CU. IN. ENG. G.S. A STAGE 1

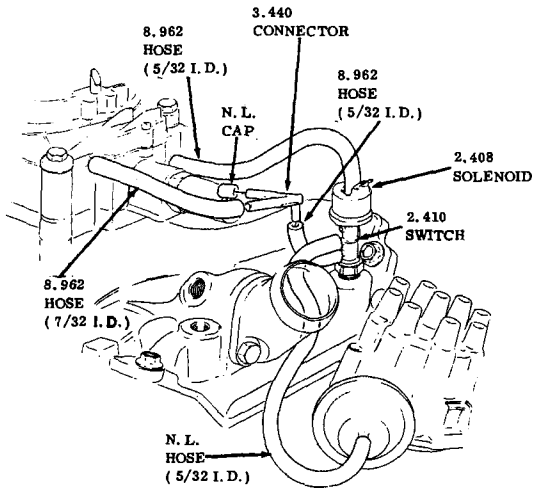

350 CU. IN. ENG. 4 BBL. A/C

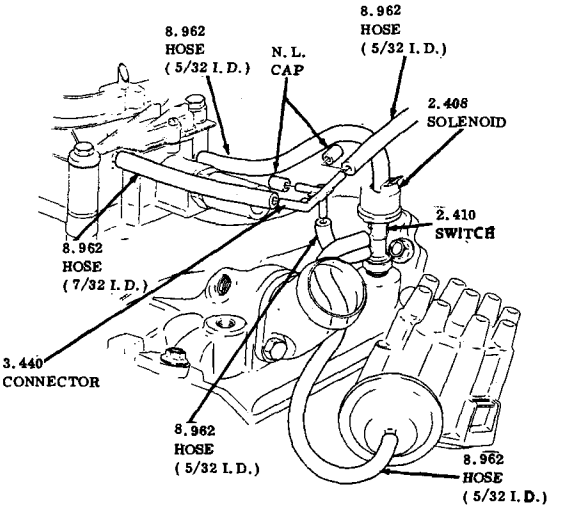

455 CU. IN. ENG.

VACUUM TUBE ROUTING
4 BBL. CARB.
1972 - ALL

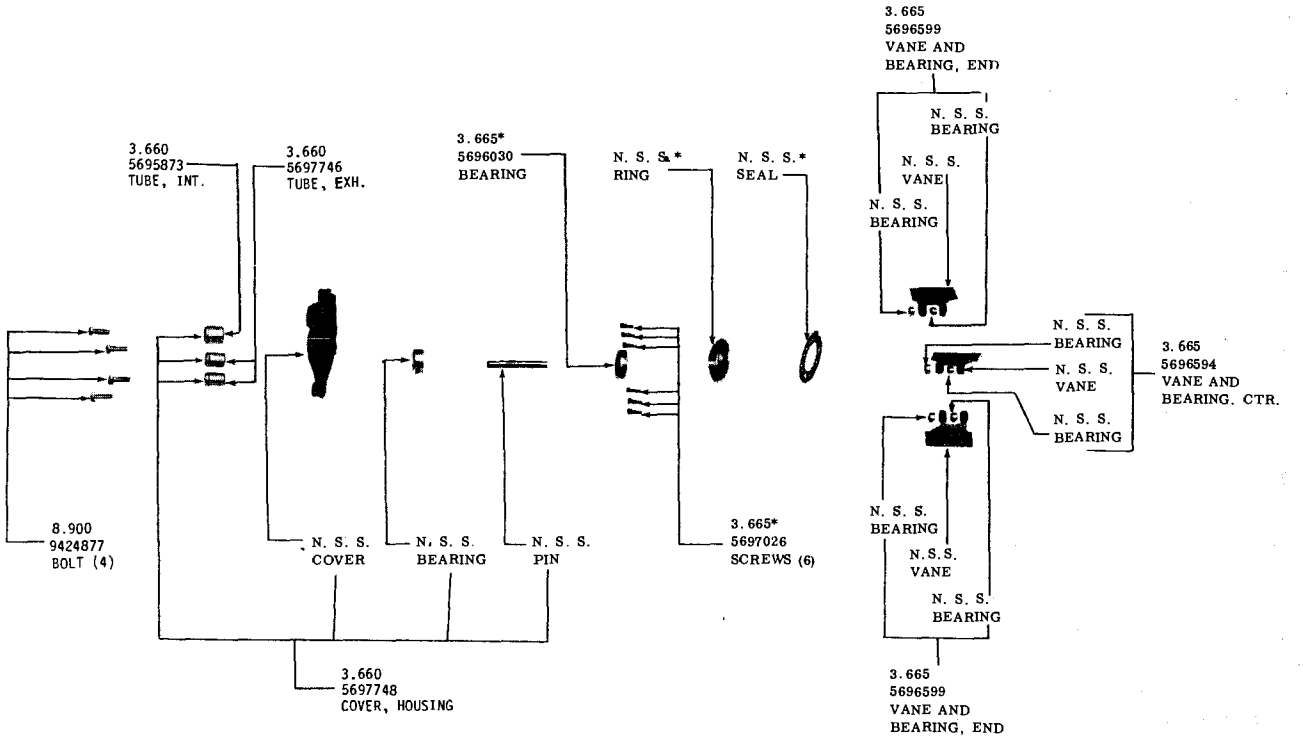

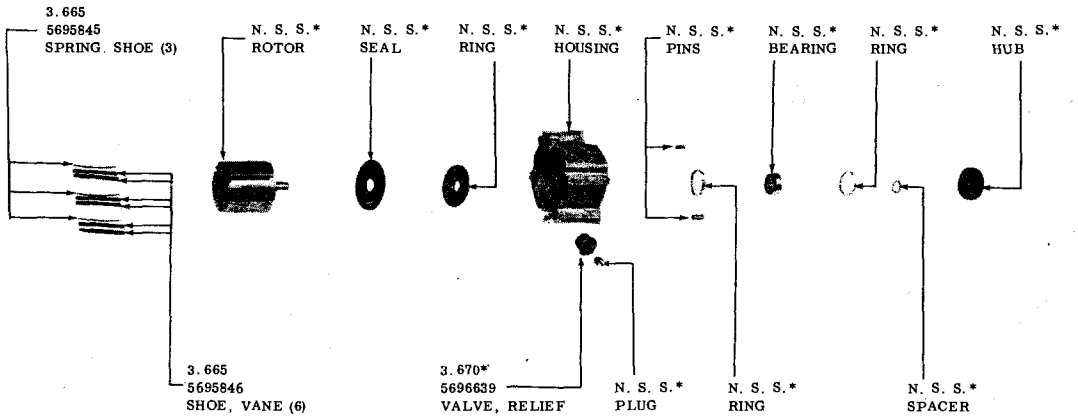

*NOTE: ALL PARTS IN THIS ILLUSTRATION ARE PART OF 3.660 5696104—PUMP, COMPLETE

AIR INJECTOR REACTOR PUMP
1966-1967 ALL

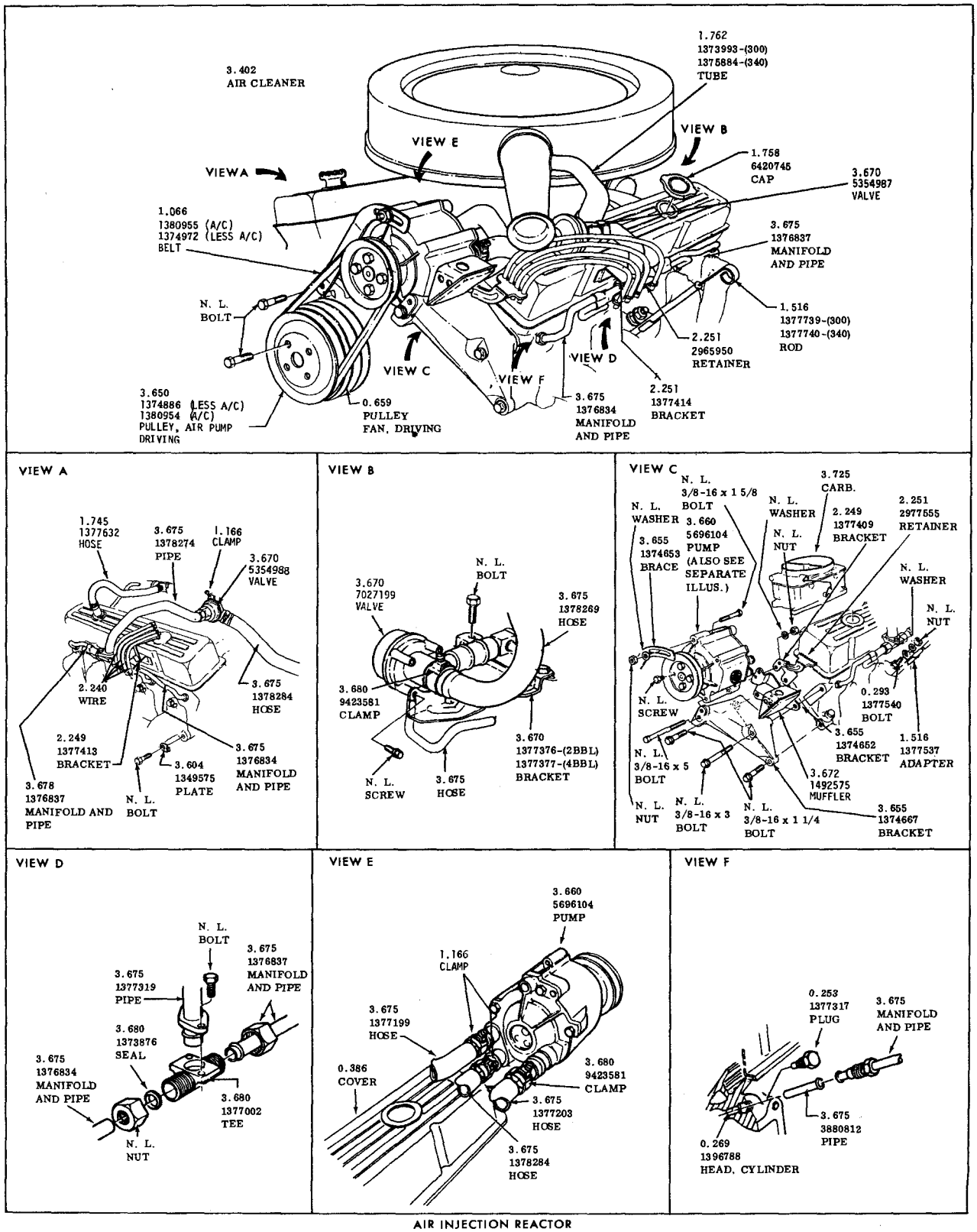

AIR INJECTION REACTOR
1966 —SPECIAL —SKYLARK—LESABRE
(V-8 LESS POWERSTEERING)

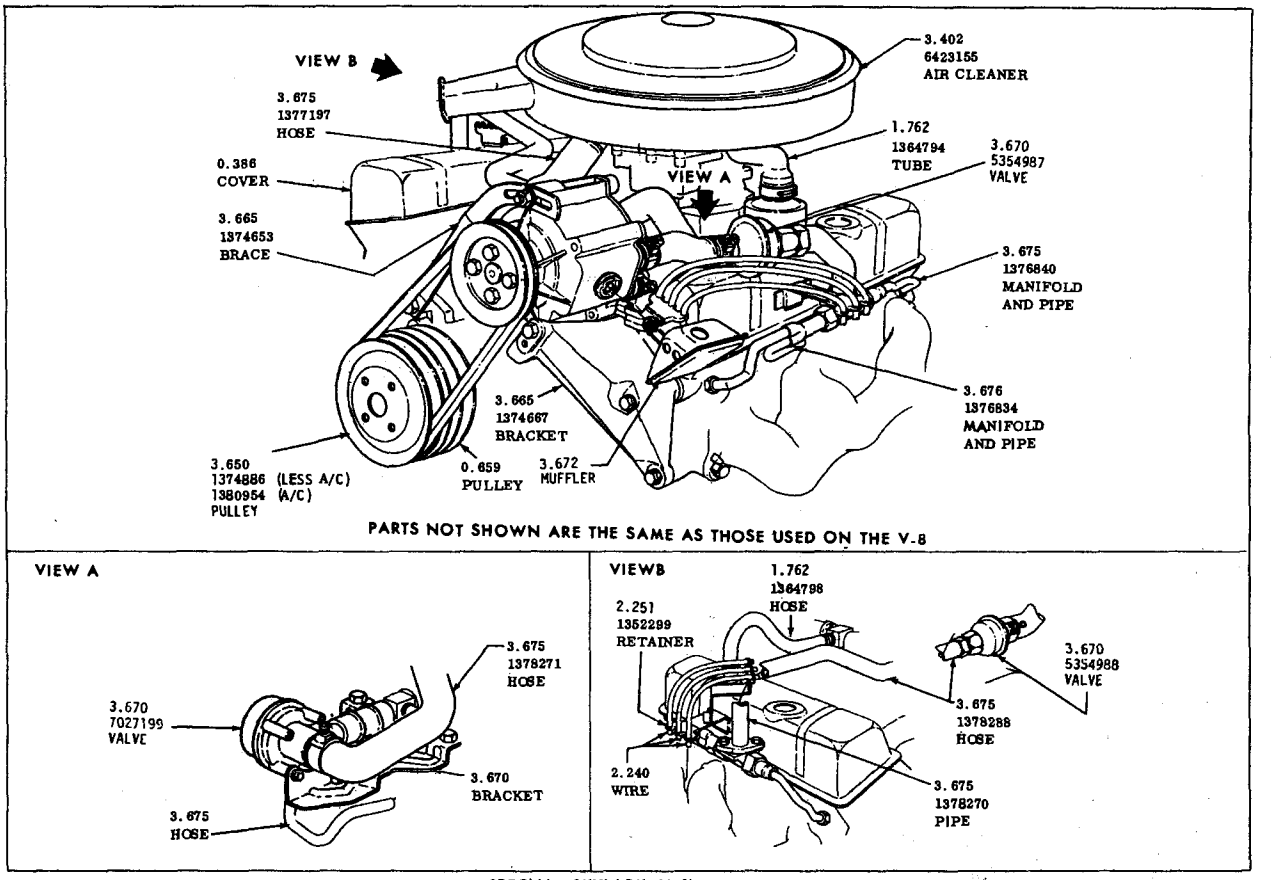

SPECIAL—SKYLARK (V-6)

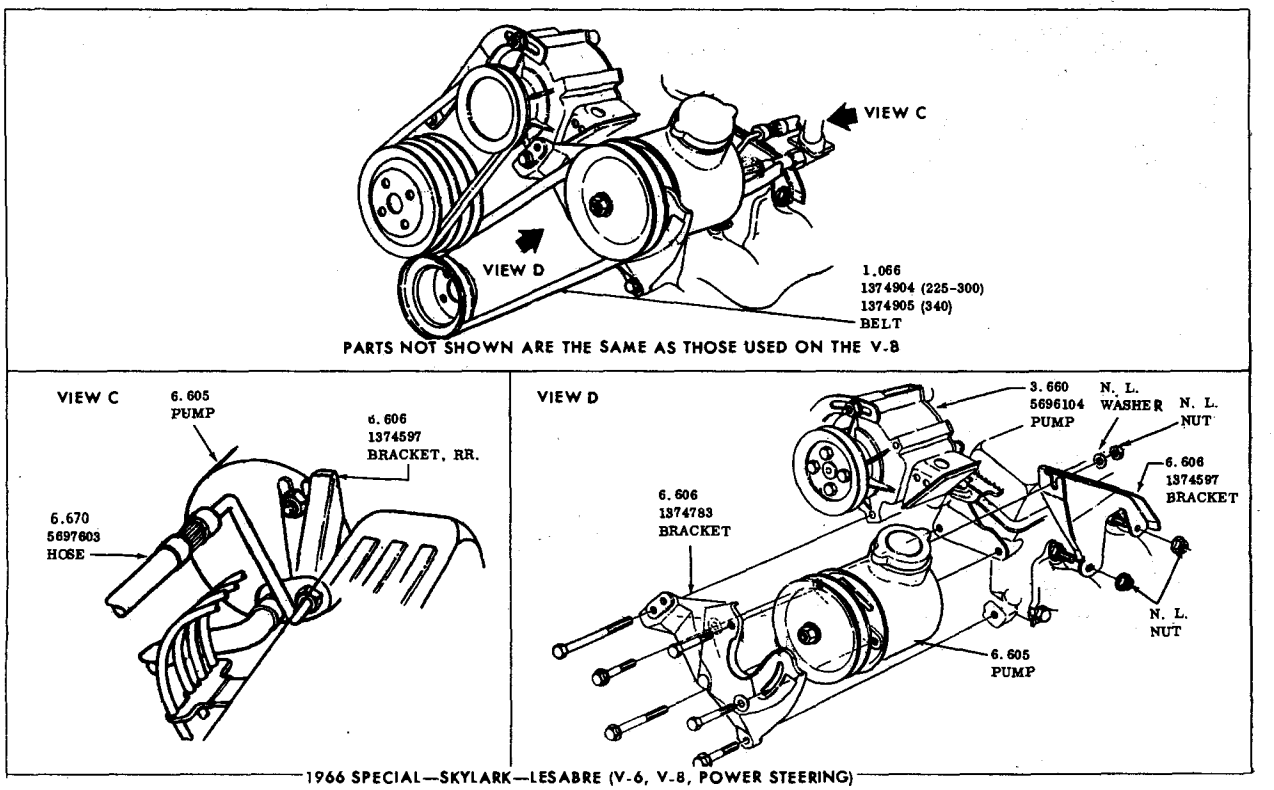

1966 SPECIAL—SKYLARK—LESABRE (V-6, V-8, POWER STEERING)
AIR INJECTION REACTOR

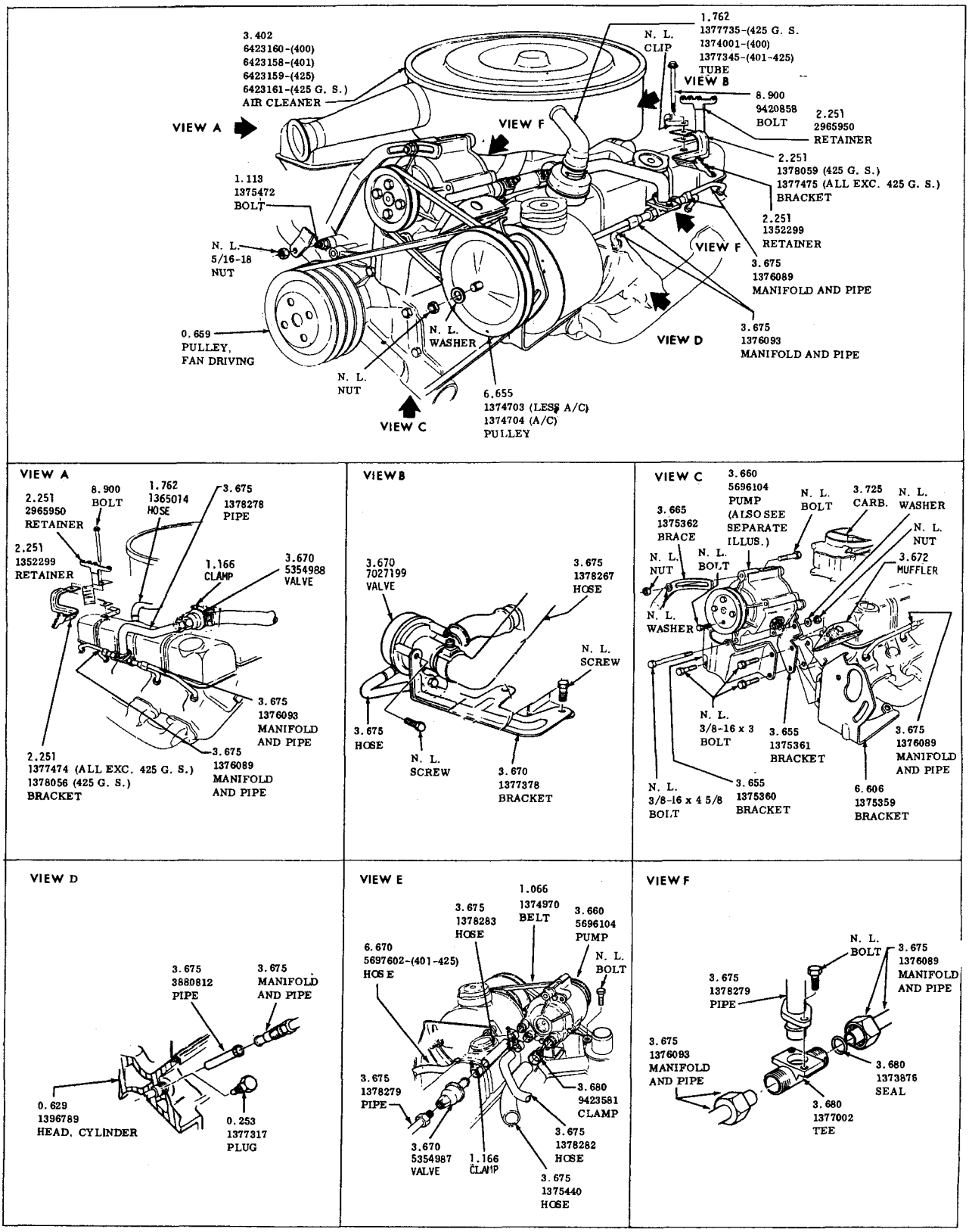

AIR INJECTION REACTOR
1966 SKYLARK GRAN SPORT—WILDCAT—
ELECTRA 225— RIVIERA

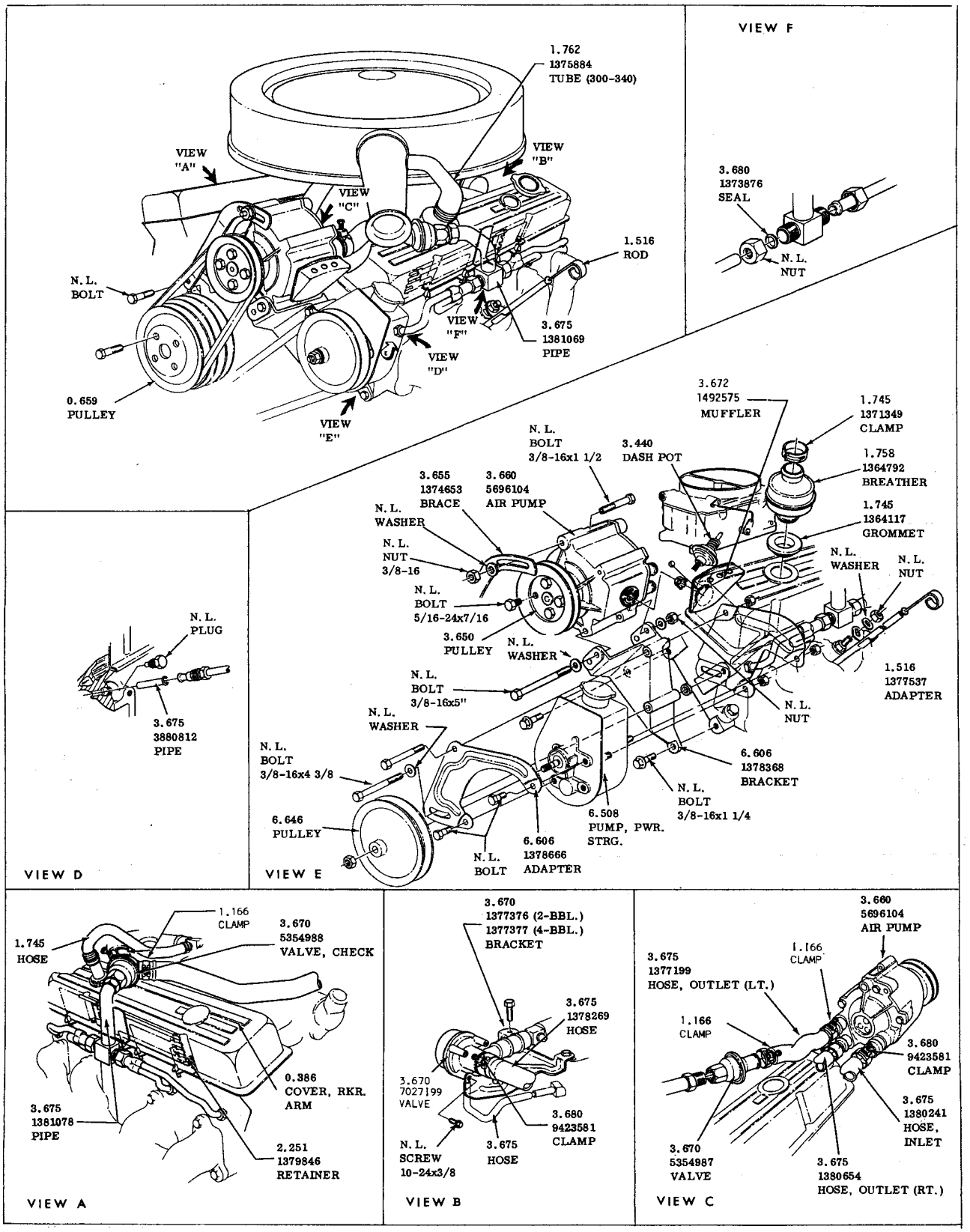

AIR INJECTOR REACTION

1967—225—300—340—ENGINE

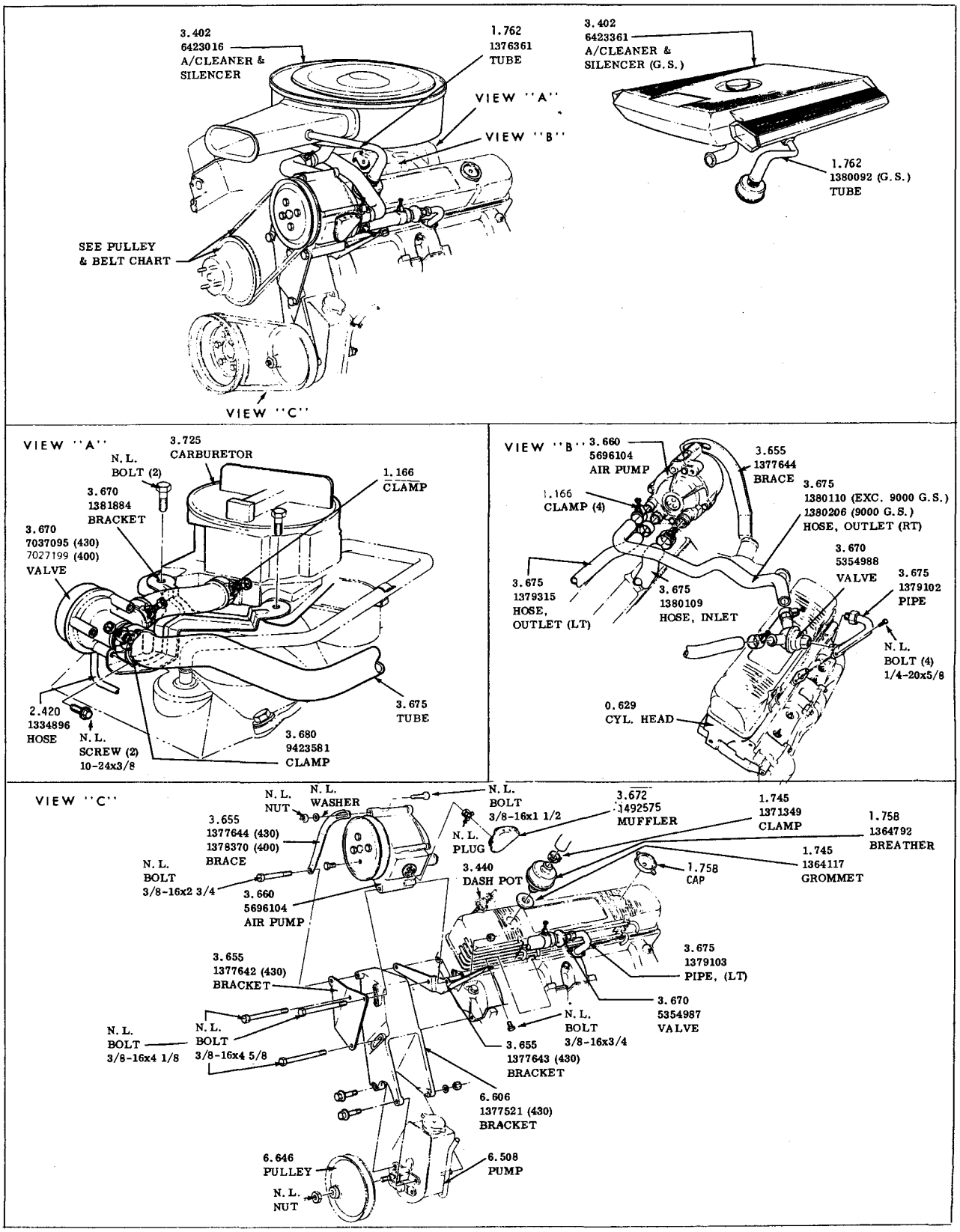

AIR INJECTOR REACTOR
1967—400—430 ENGINES

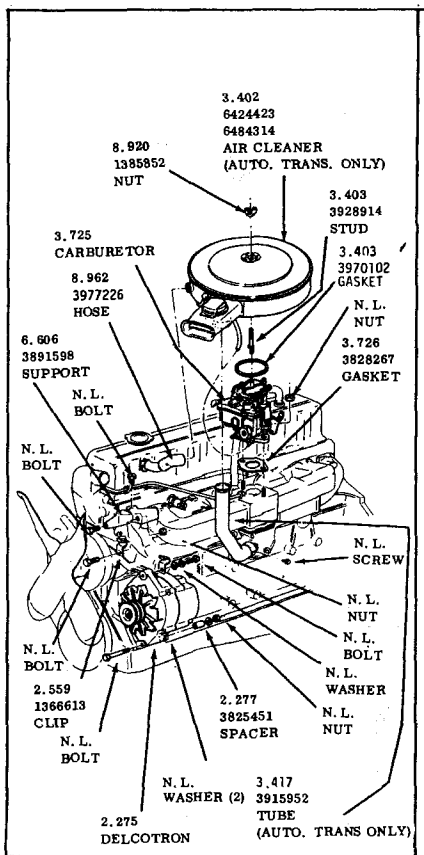

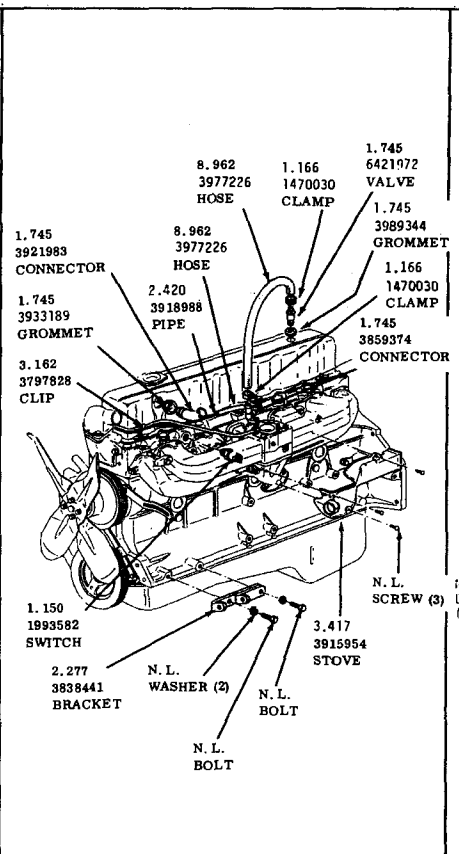

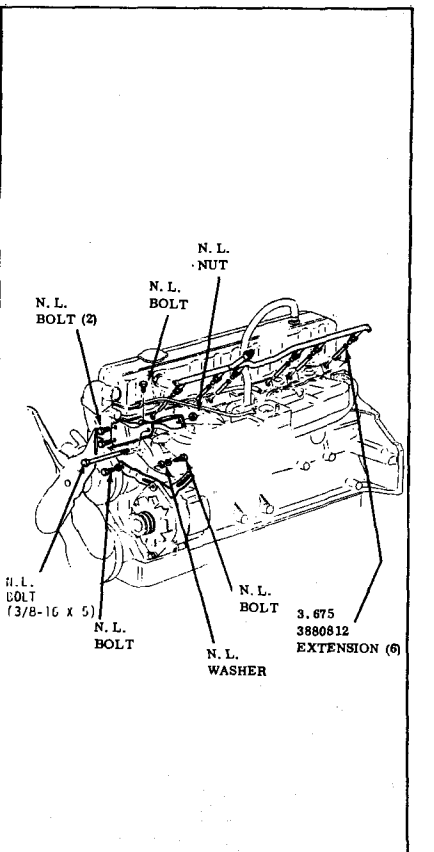

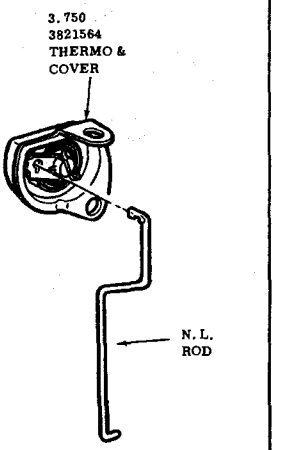

AIR INJECTOR REACTOR
1968-250 CU. IN. ENG.

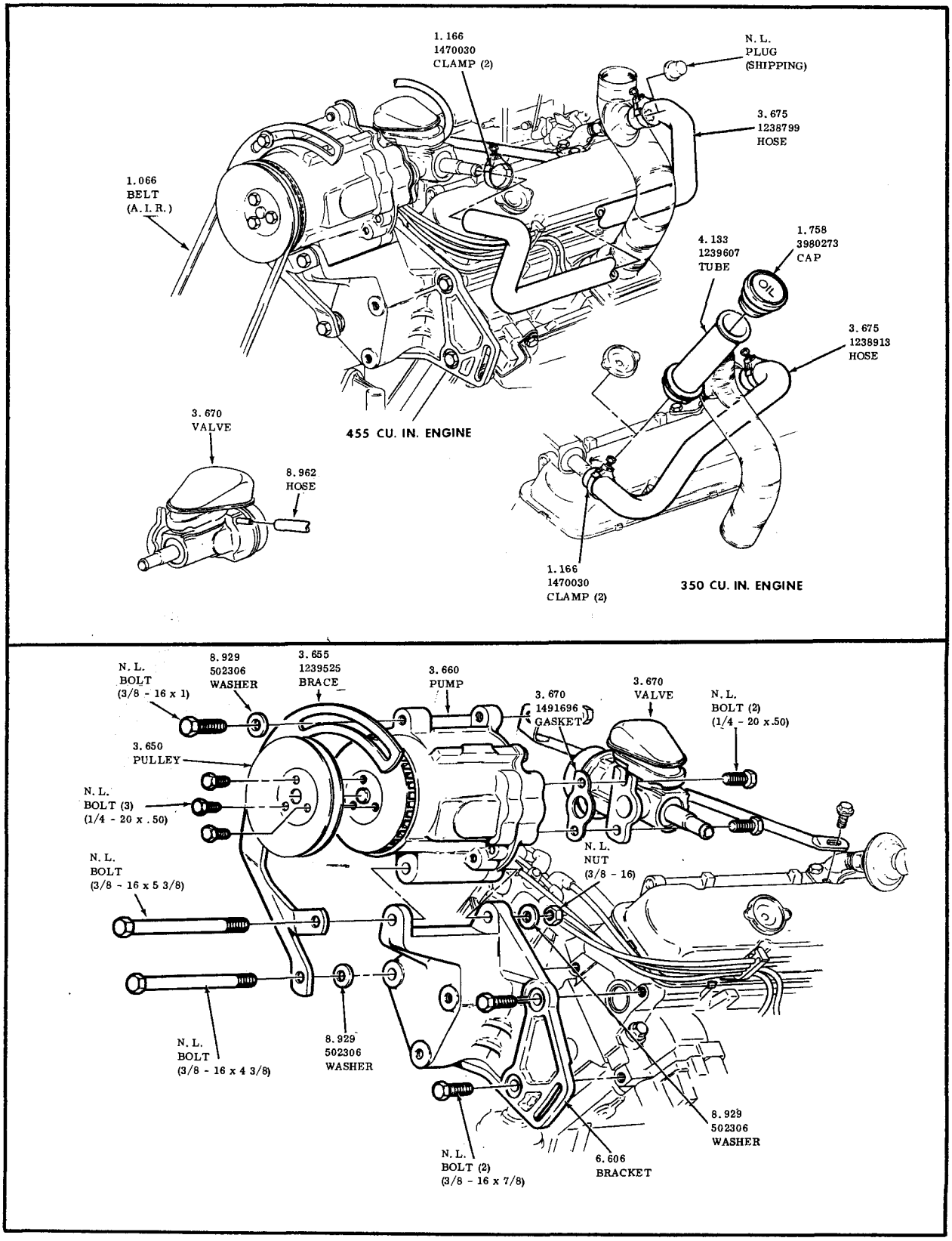

AIR INJECTION REACTOR

1972-ALL

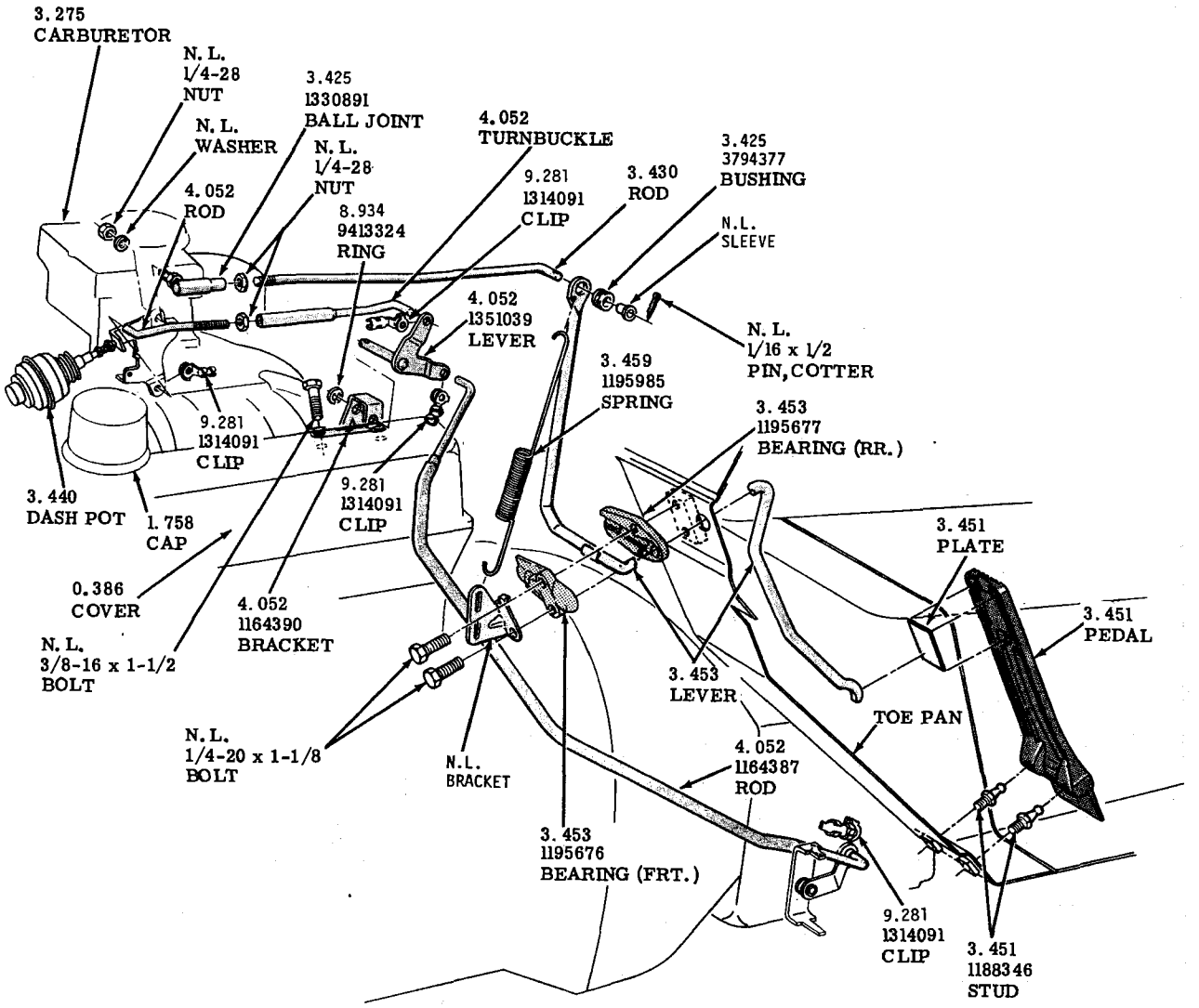

THROTTLE CONTROL - AUTOMATIC TRANSMISSION
1961-63 - 40 - 41 - 4300

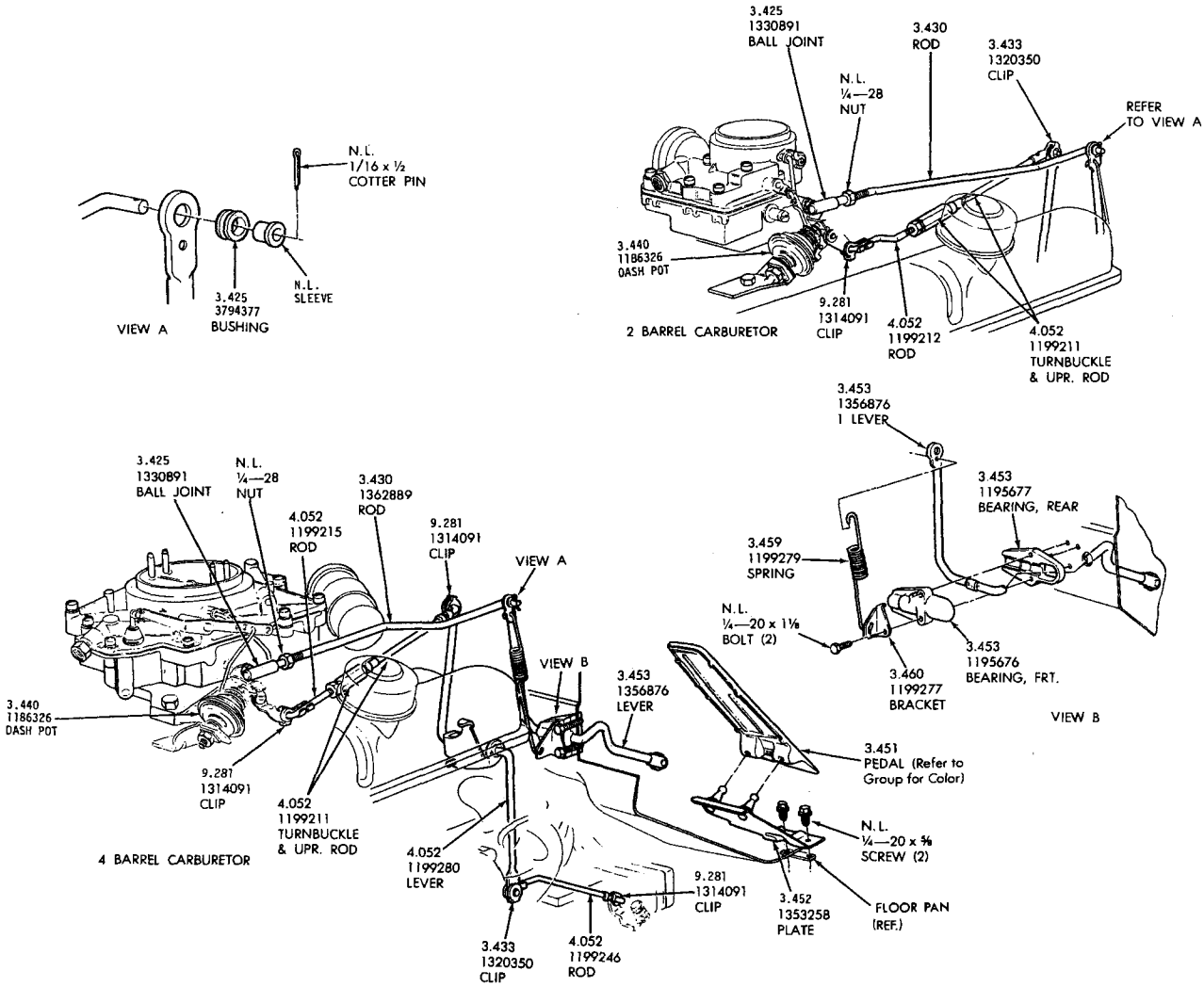

THROTTLE CONTROL
1963 — 4400-4600-4800

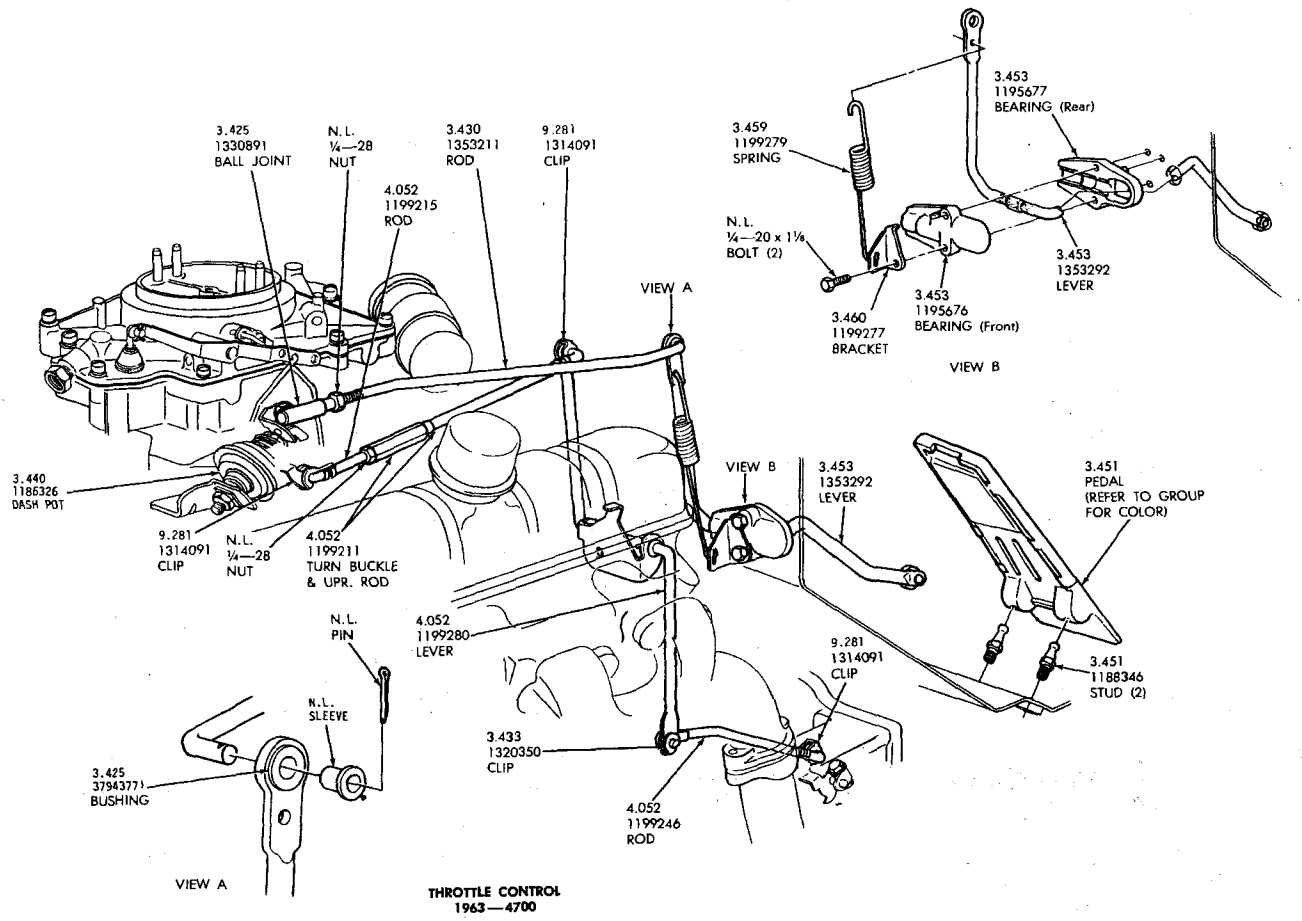

THROTTLE CONTROL
1963—4700

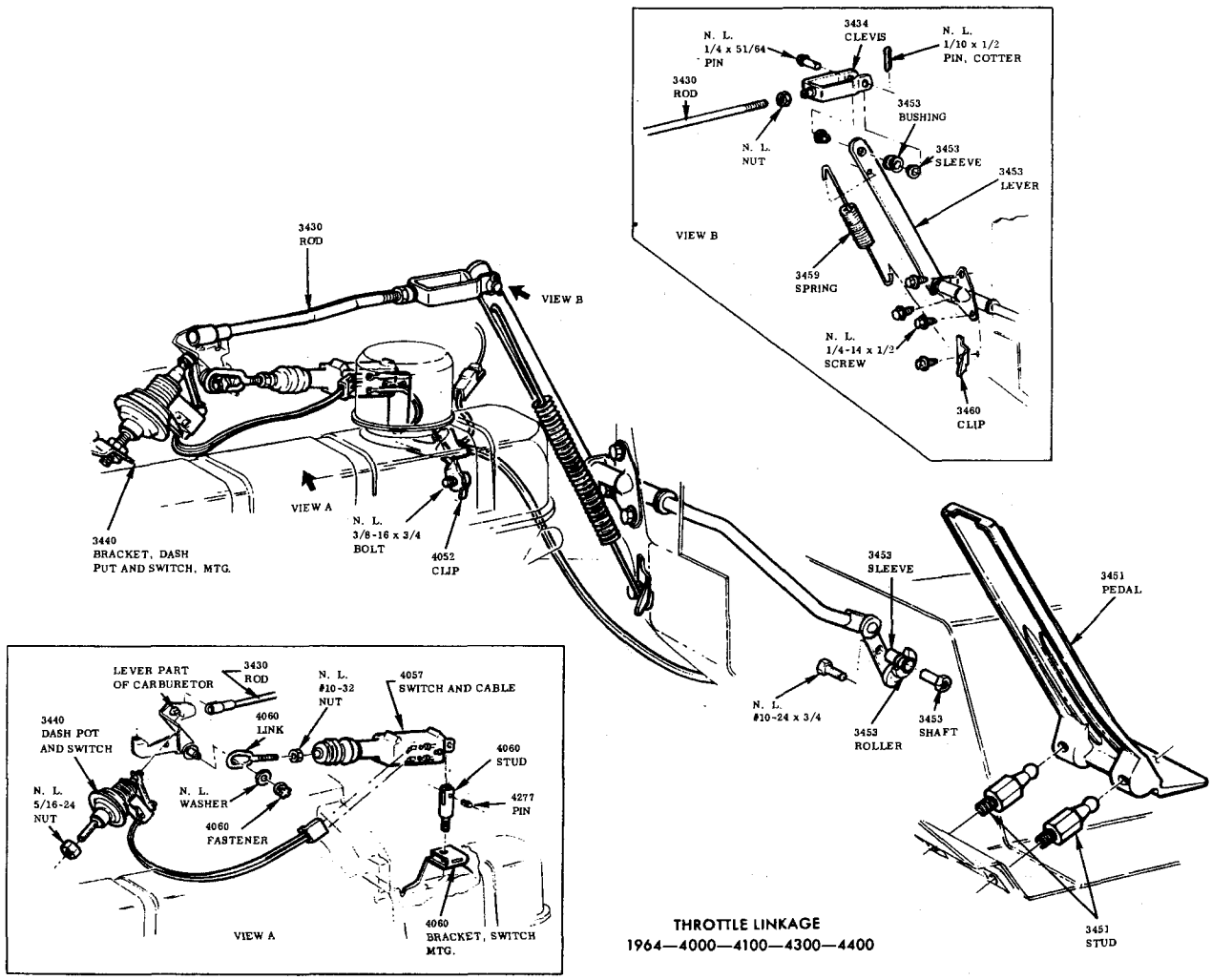

THROTTLE LINKAGE
1964—4000—4100—4300—4400

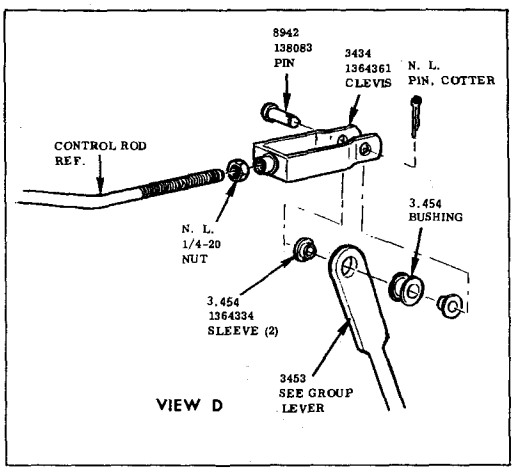

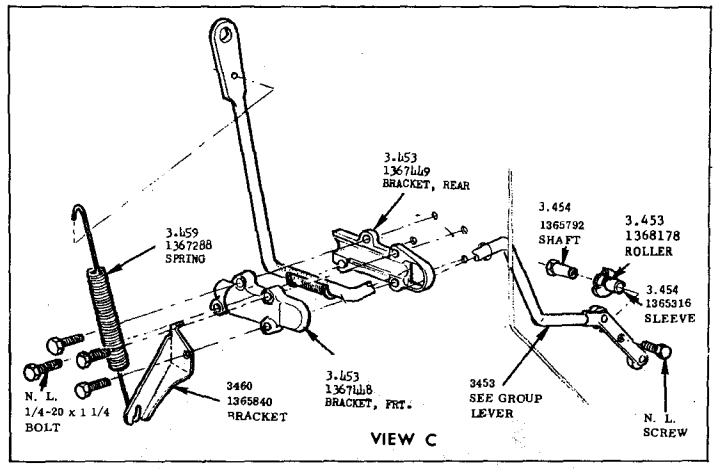

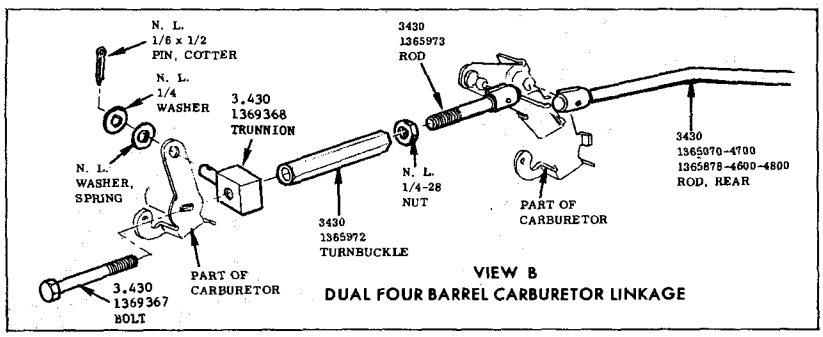

THROTTLE CONTROL

1964—4600—4700—4800

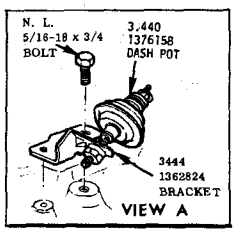

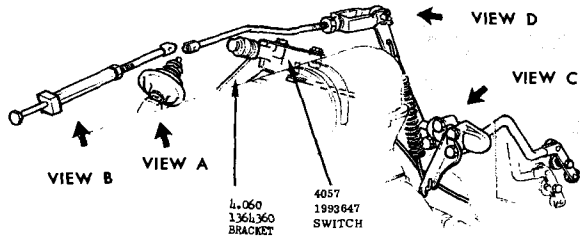

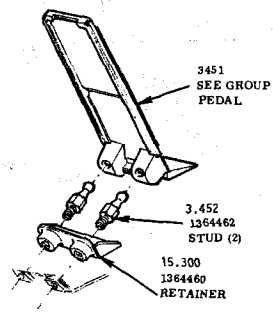

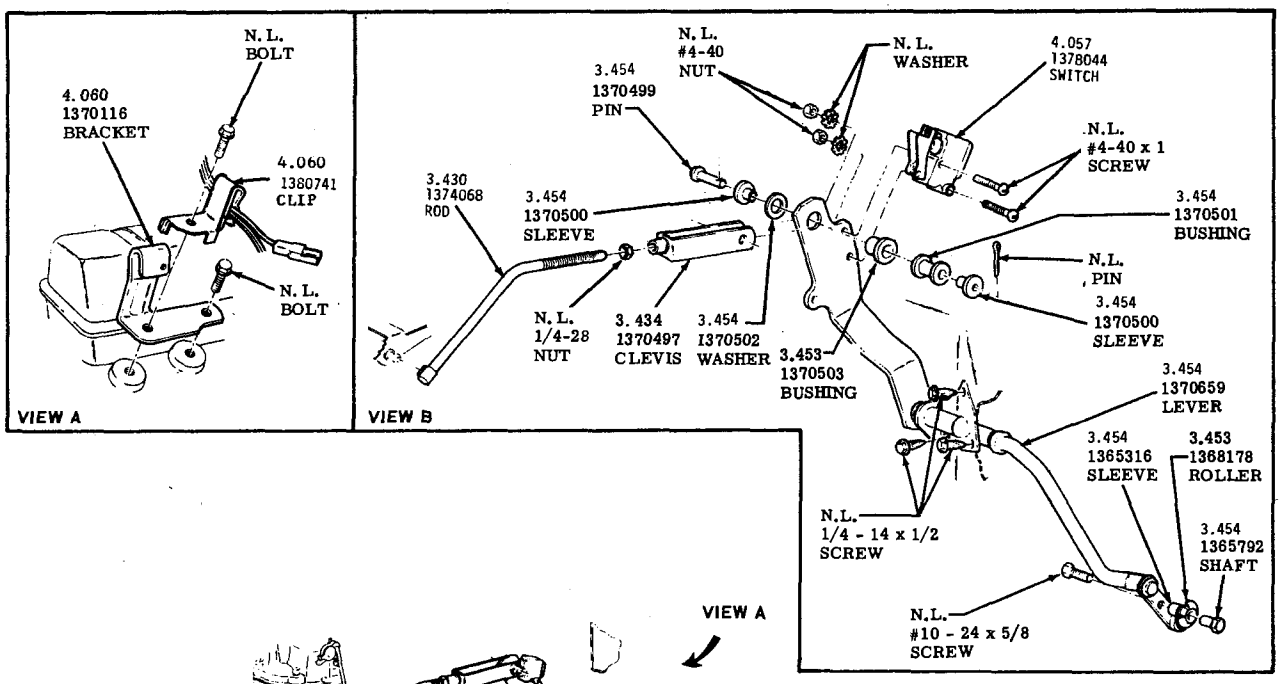

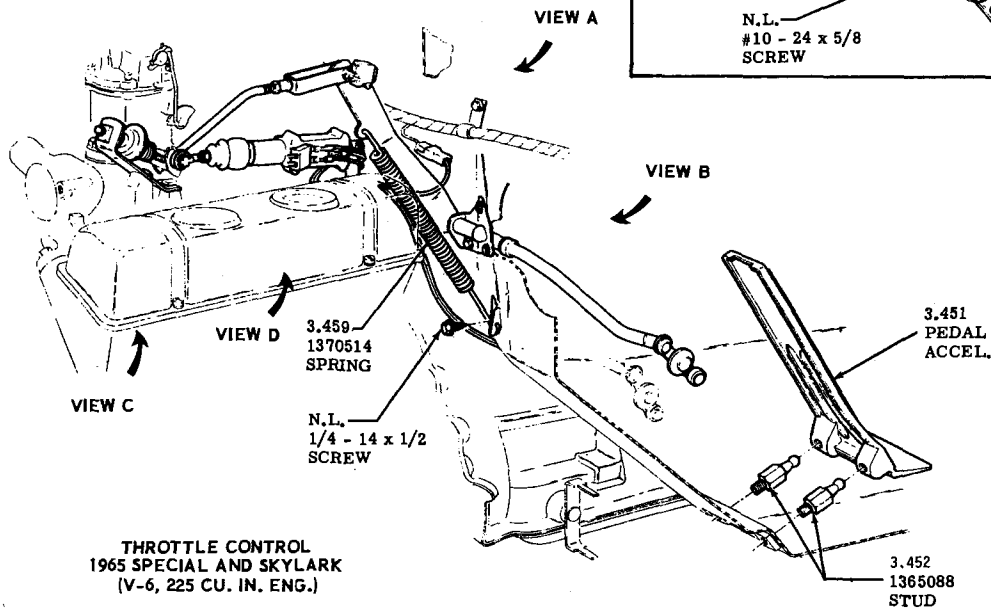

THROTTLE CONTROL
1965 SPECIAL AND SKYLARK
(V-6, 225 CU. IN. ENG.)

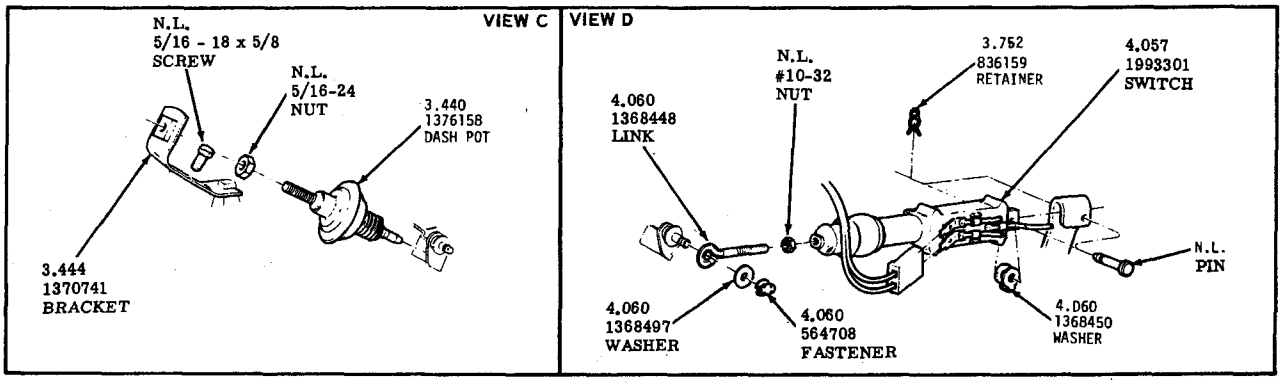

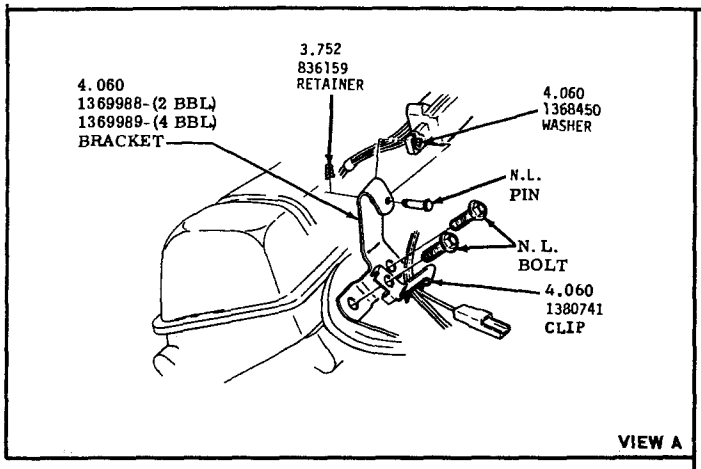

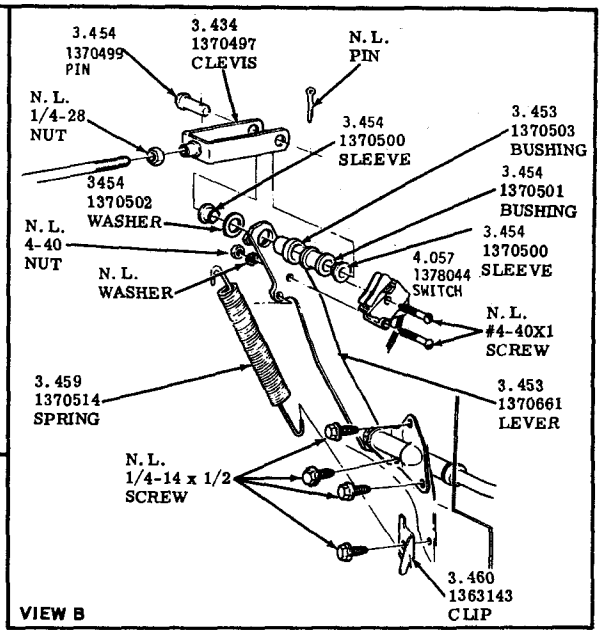

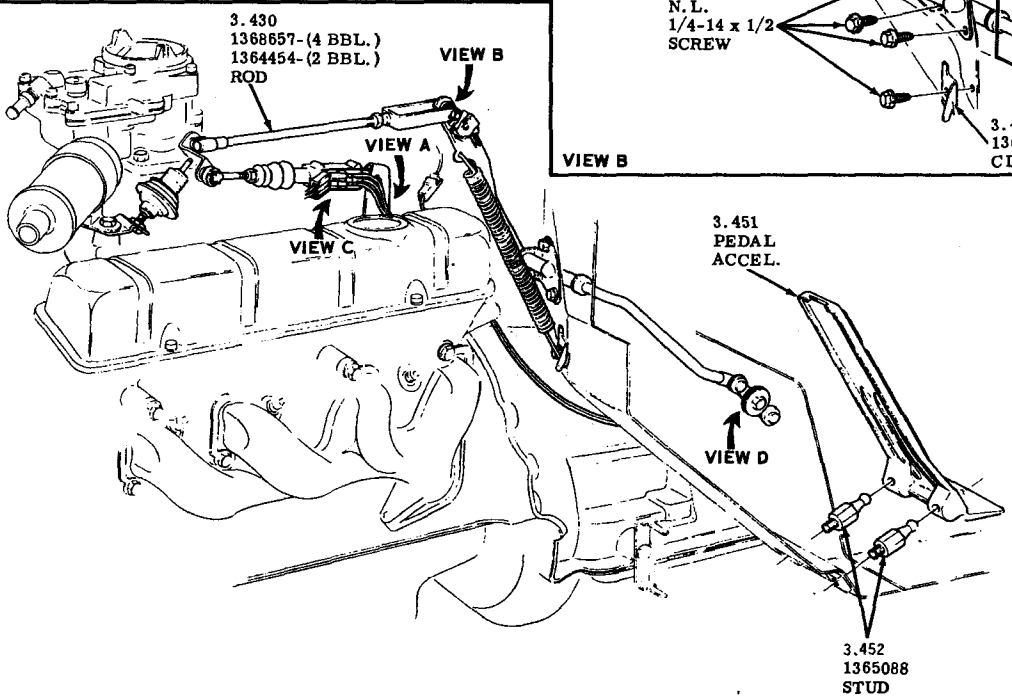

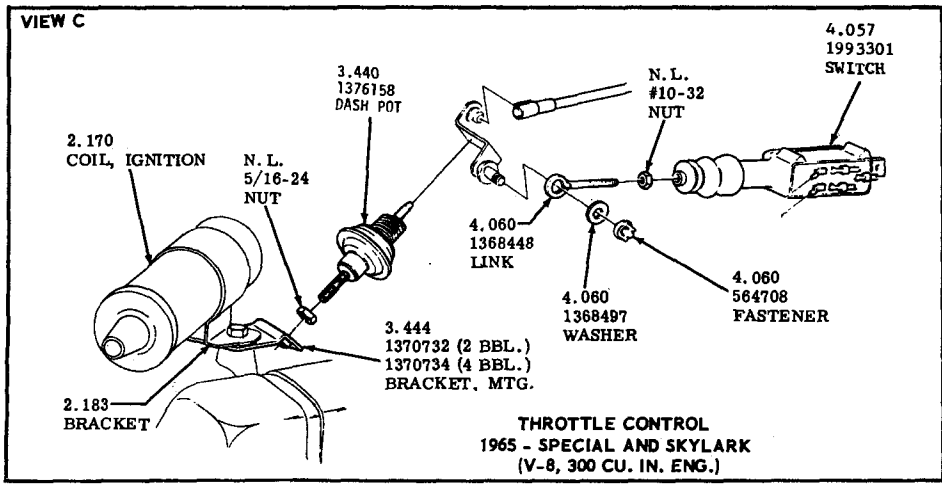

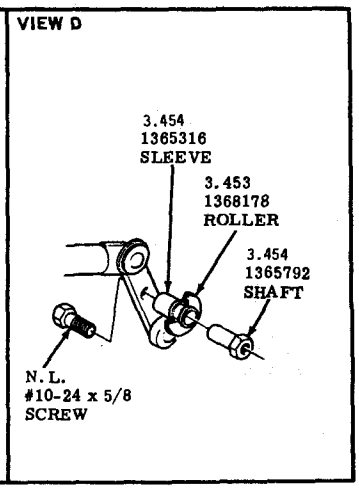

THROTTLE CONTROL
1965 - SPECIAL AND SKYLARK
(V-8, 300 CU. IN. ENG.)

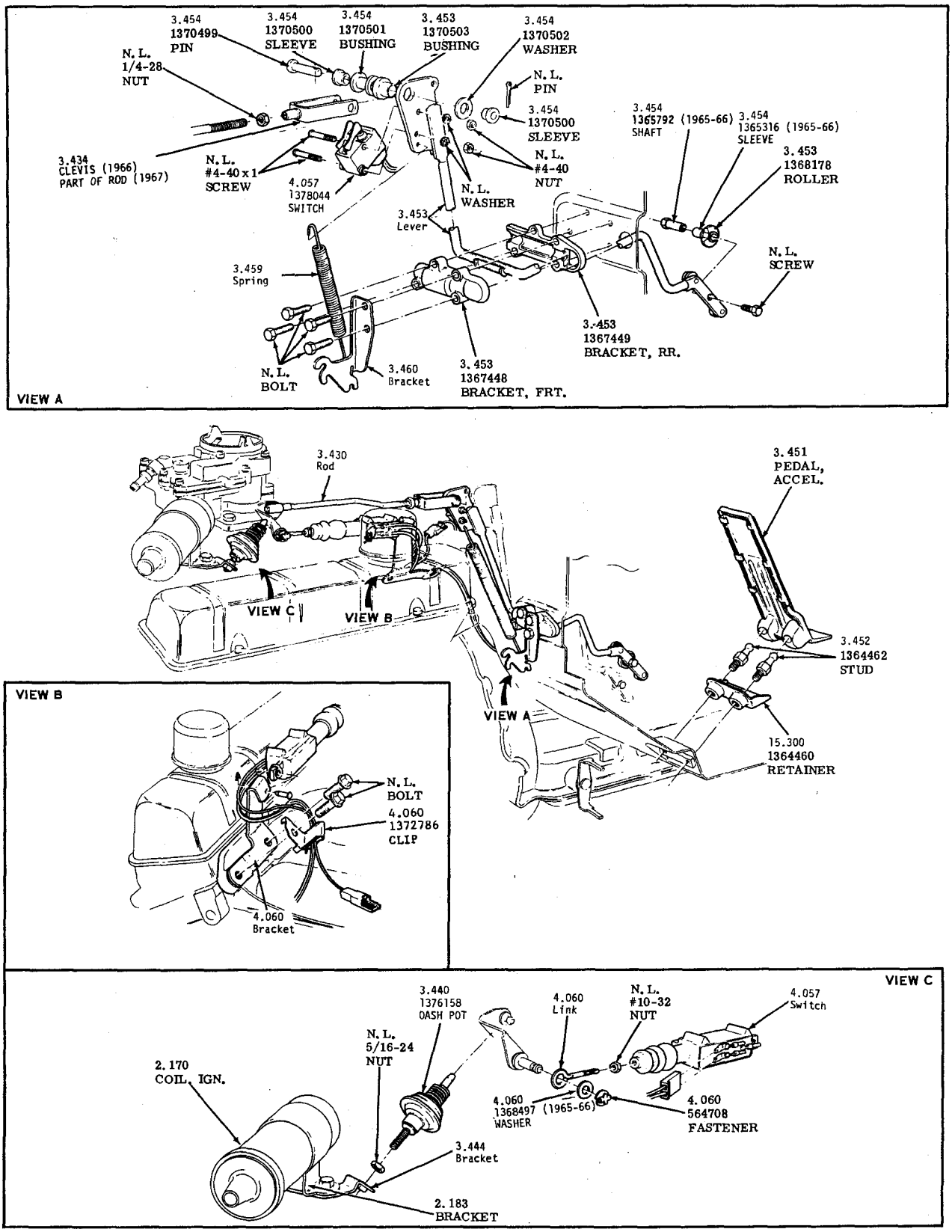

THROTTLE CONTROL
1965-1967-LESABRE

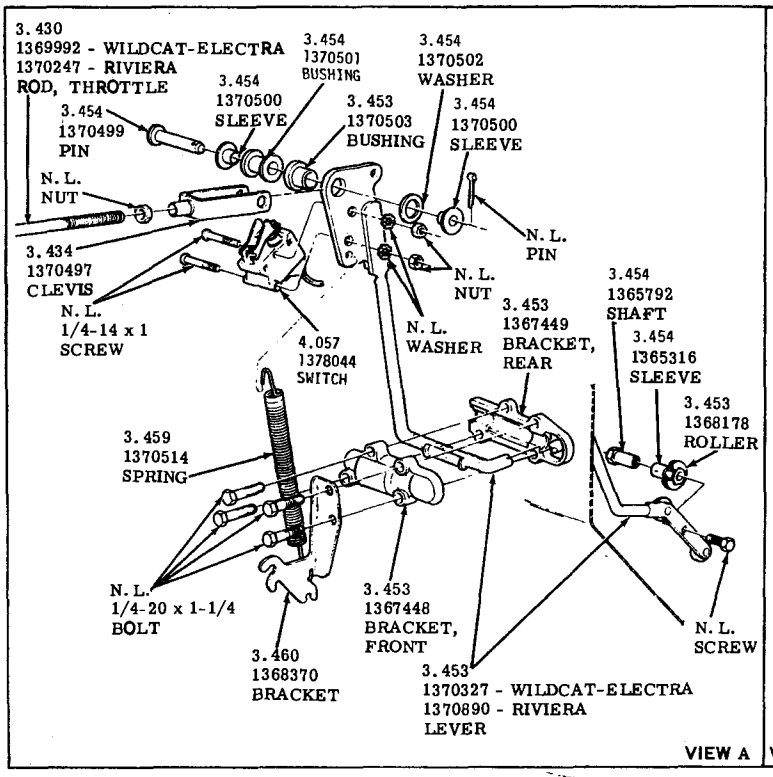

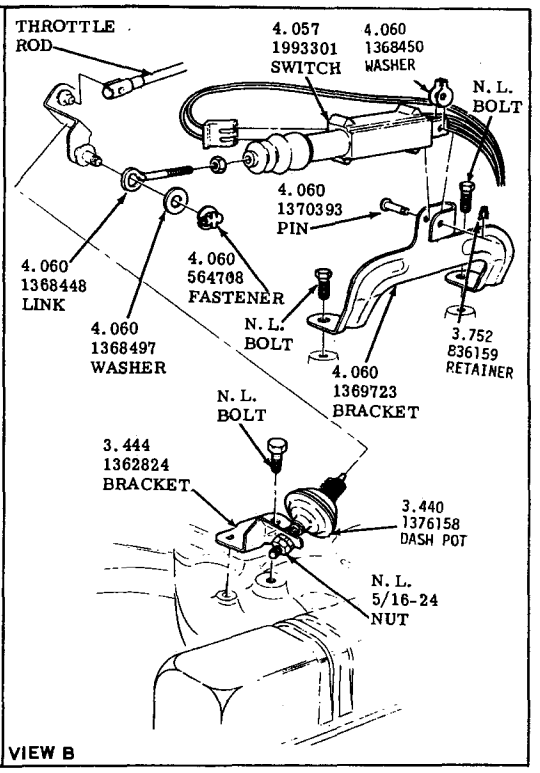

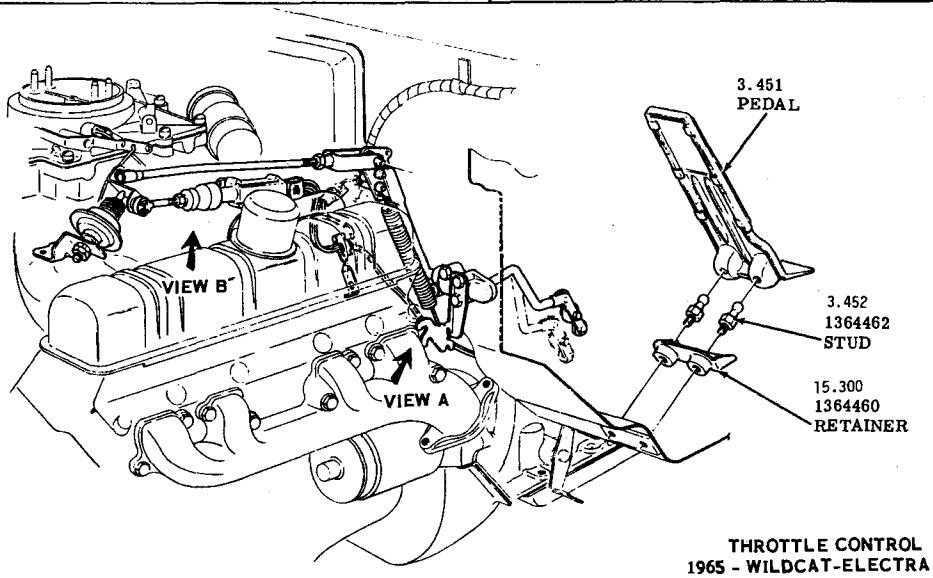

THROTTLE CONTROL
1965 - WILDCAT-ELECTRA 225-
RIVIERA

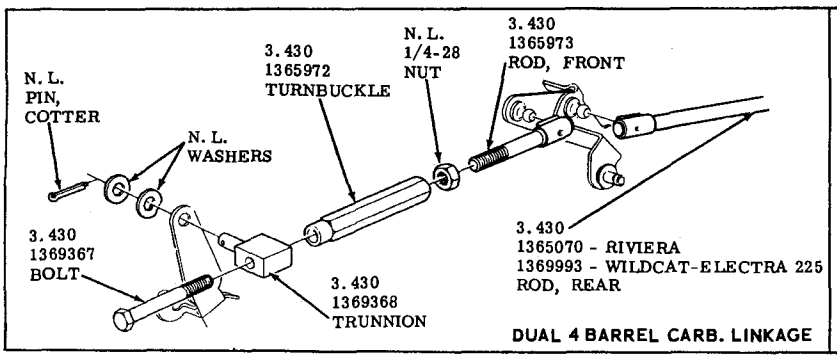

DUAL 4 BARREL CARB. LINKAGE

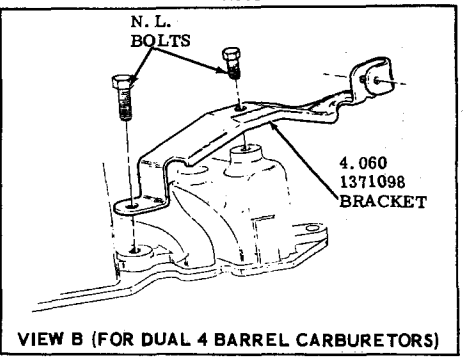

VIEW B (FOR DUAL 4 BARREL CARBURETORS)

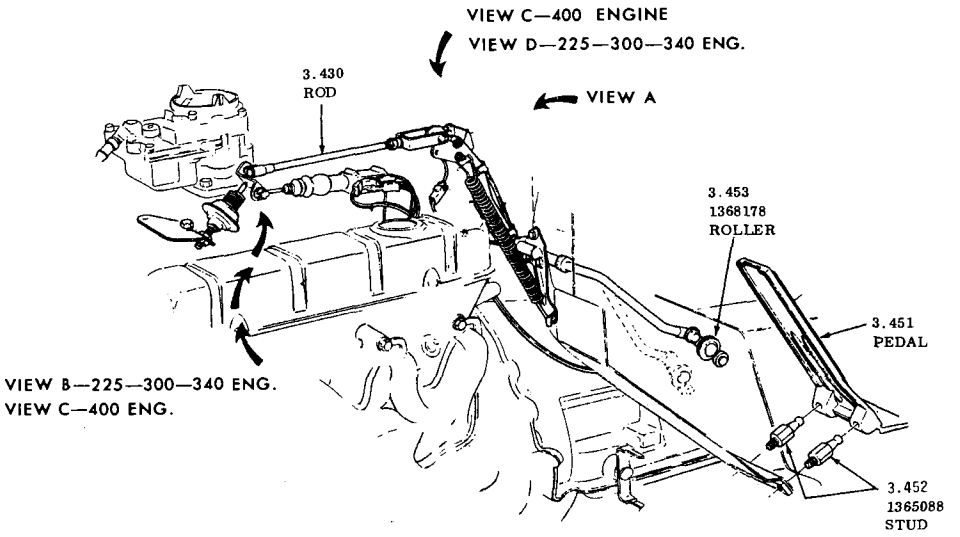

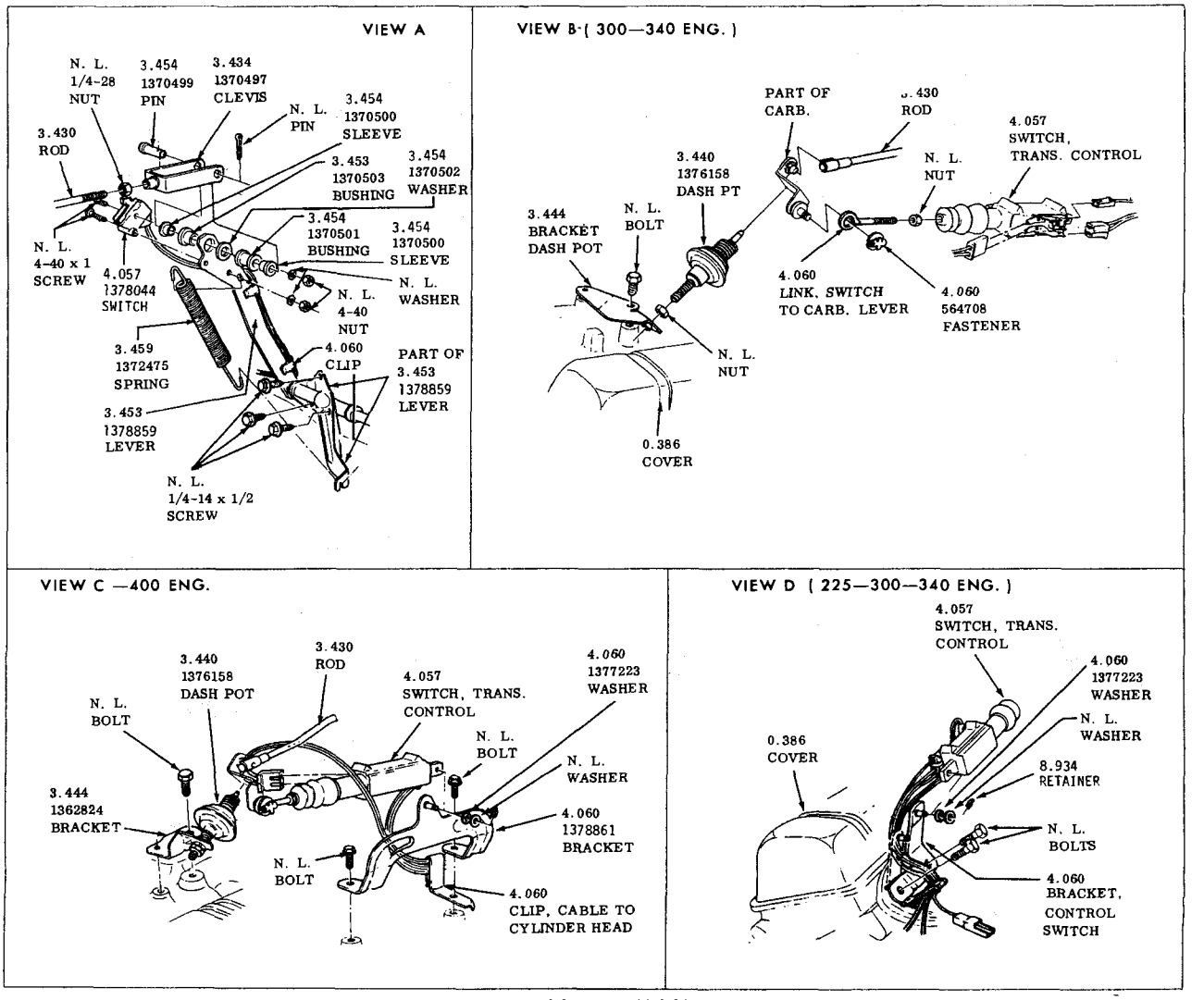

THROTTLE CONTROL

1966—SPECIAL—SKYLARK—SKYLARK GRAN SPORT

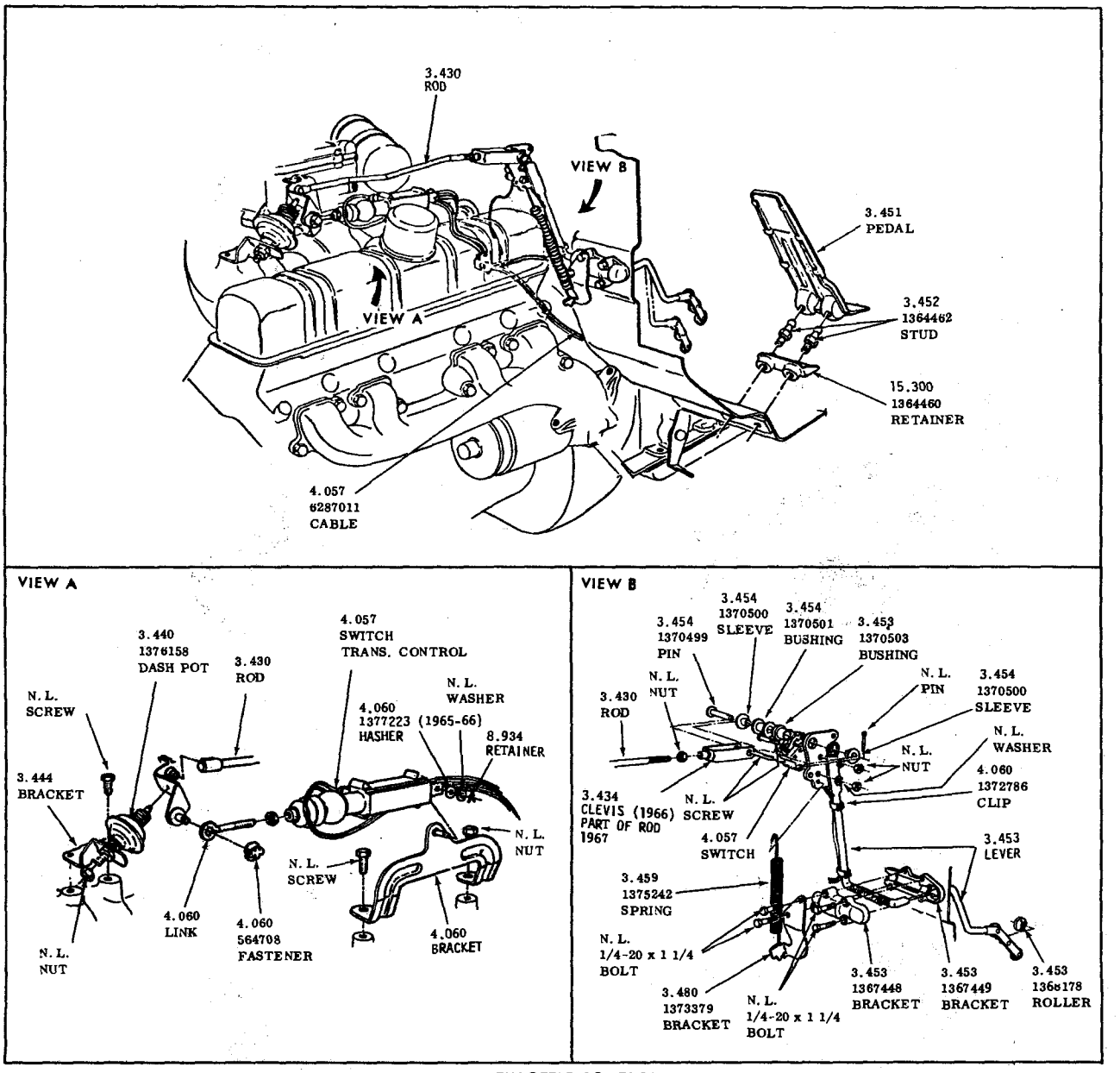

THROTTLE CONTROL
1966-1967 —WILDCAT ELECTRA 225 RIVIERA

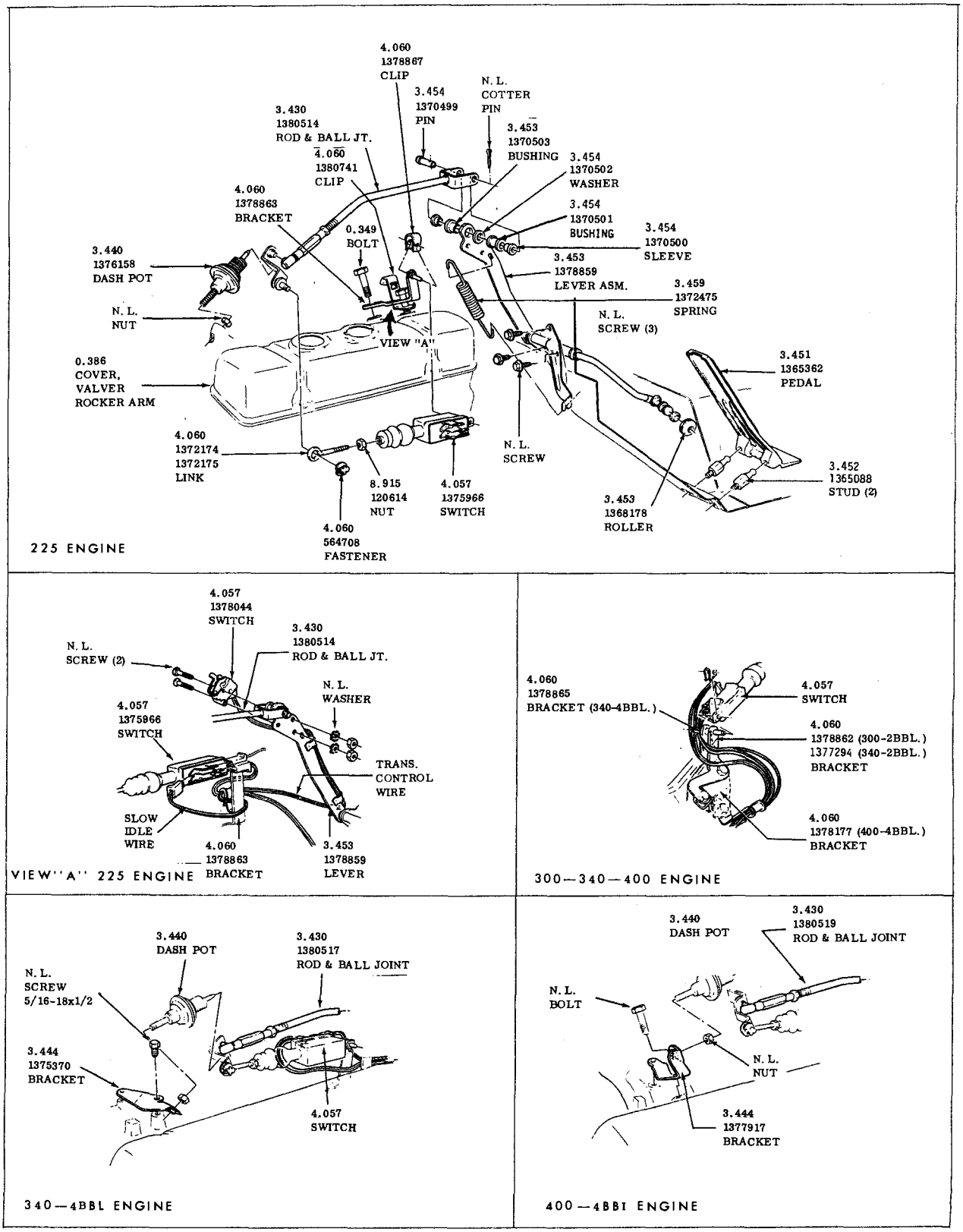

THROTTLE CONTROL
1967—Special—Skylark—G.S. 400

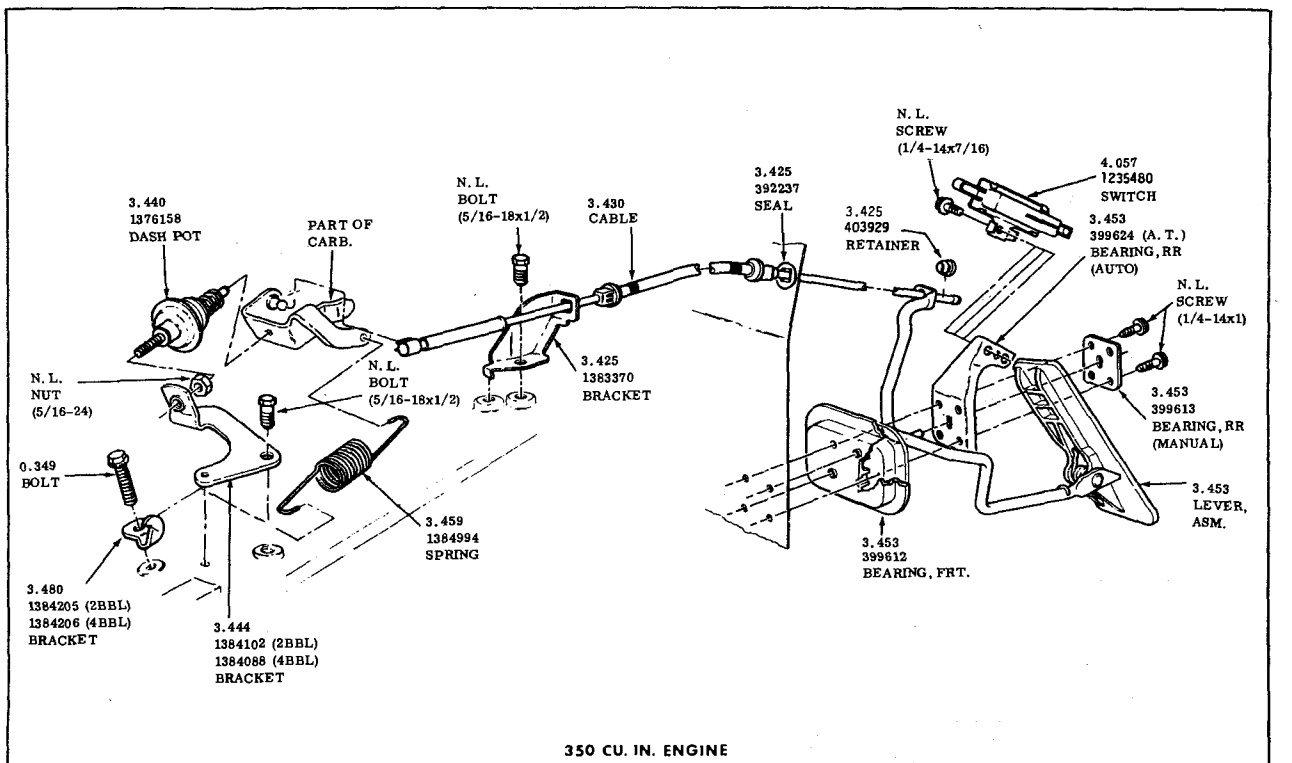

350 CU. IN. ENGINE

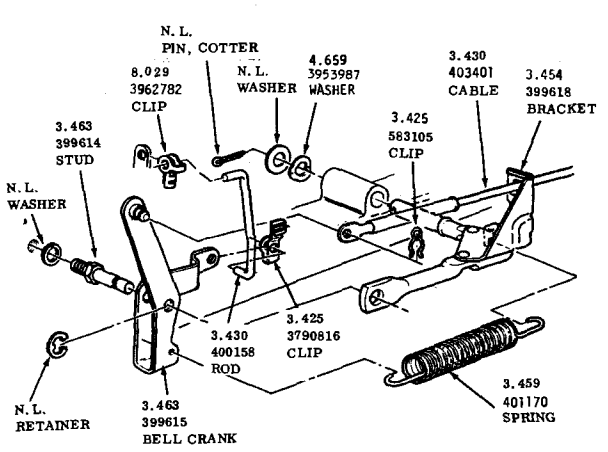

250 CU. IN. ENGINE

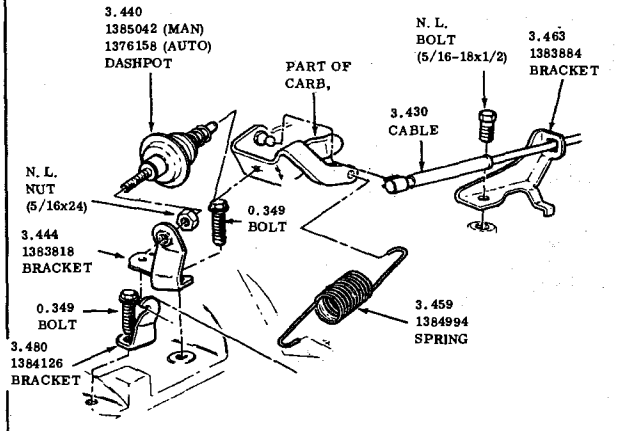

400 CU. IN. ENGINE

THROTTLE CONTROL
1968 - 30-4000

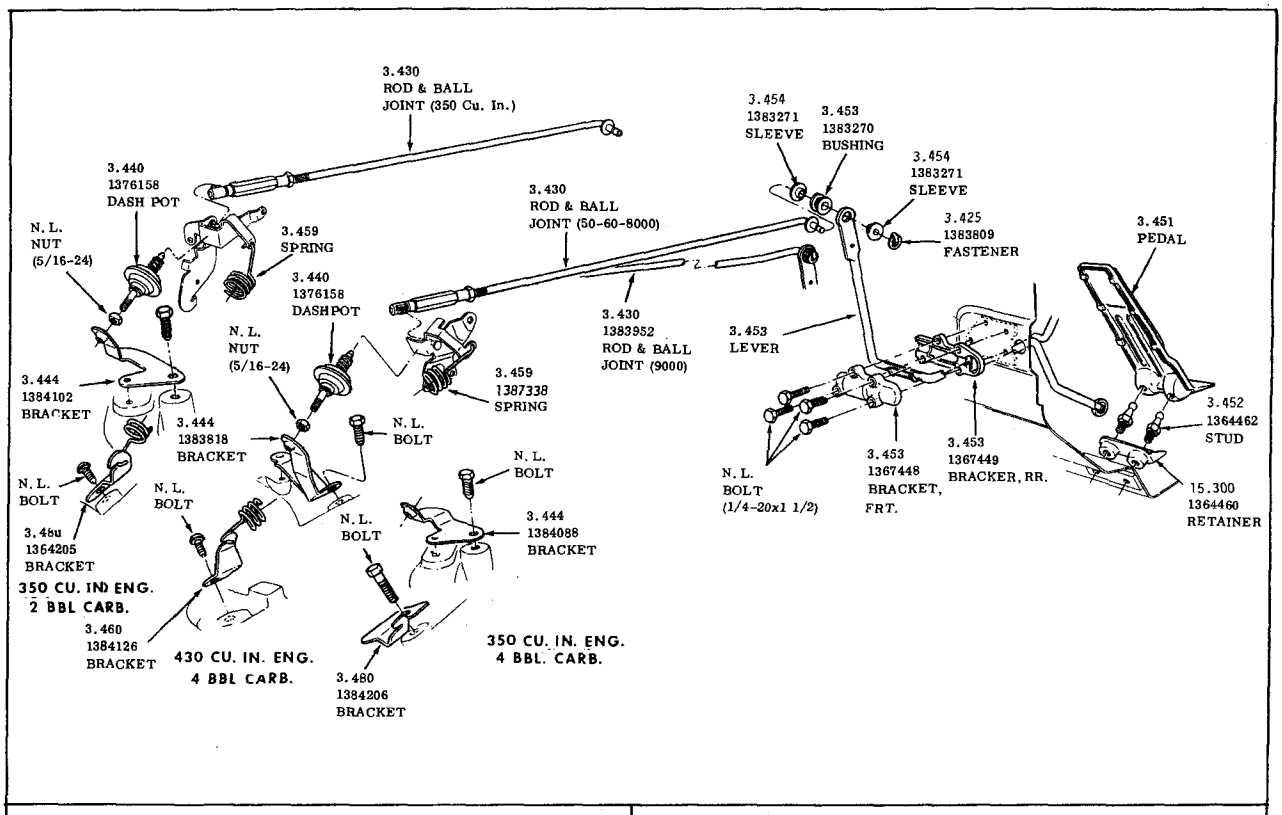

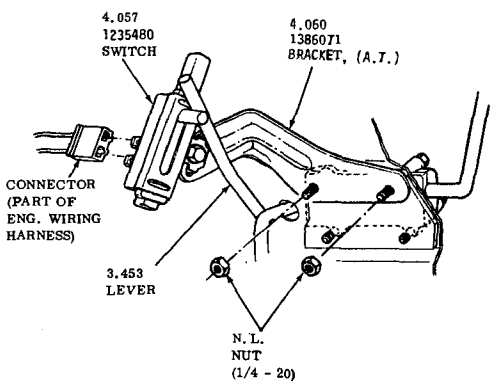

VIEW A 52-62-8200

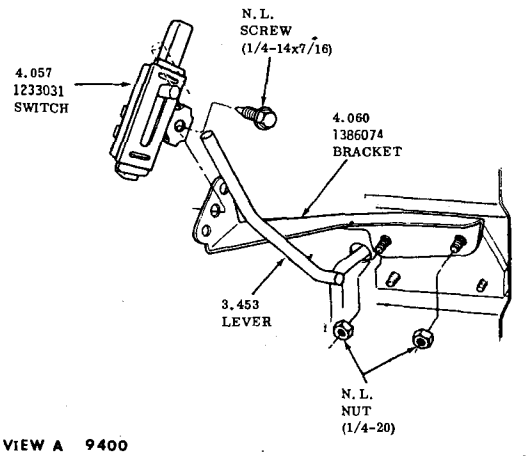

VIEW A 9400

THROTTLE CONTROL
1968 - 50-60-80-9000

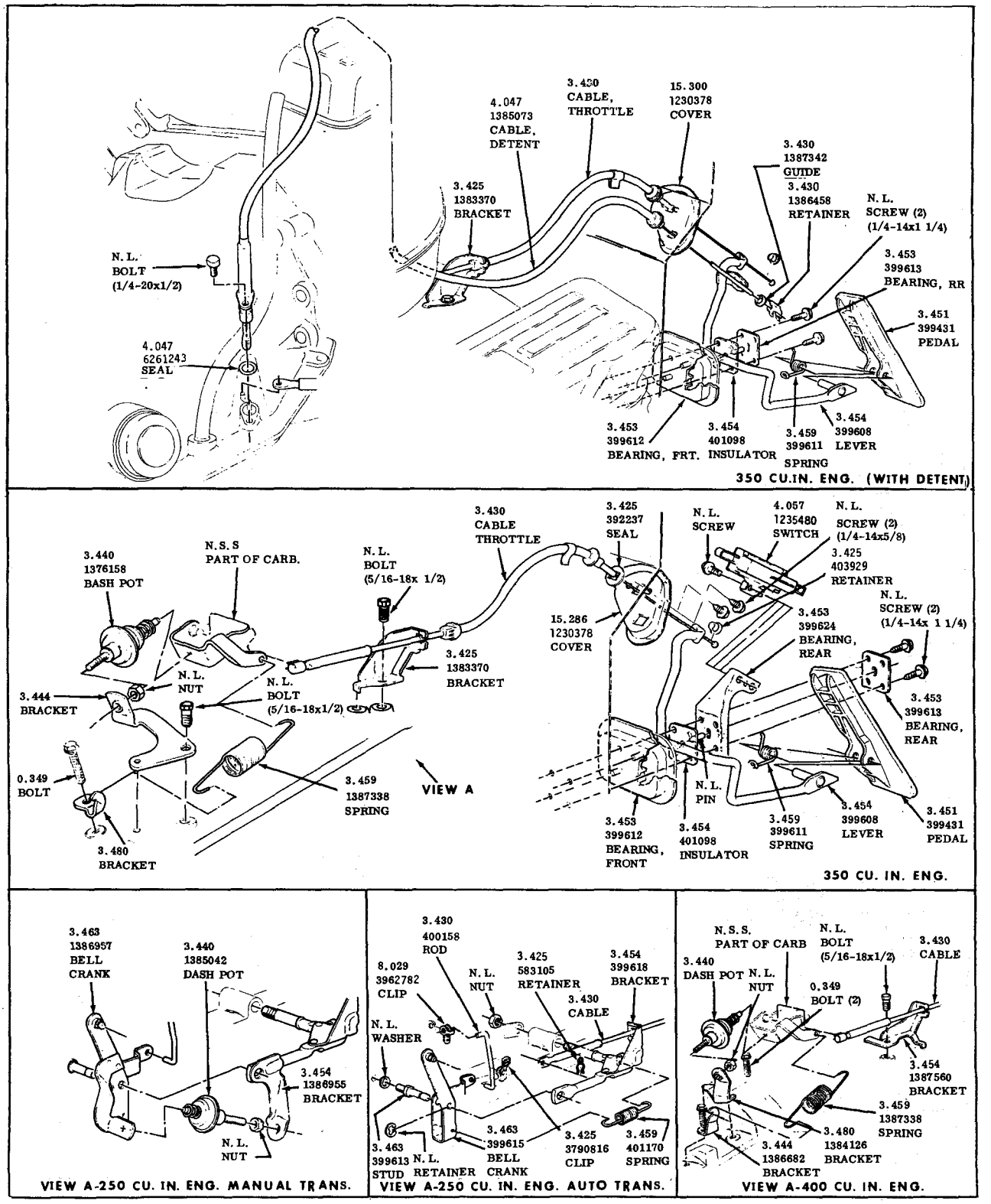

THROTTLE CONTROL
1969-30-4000

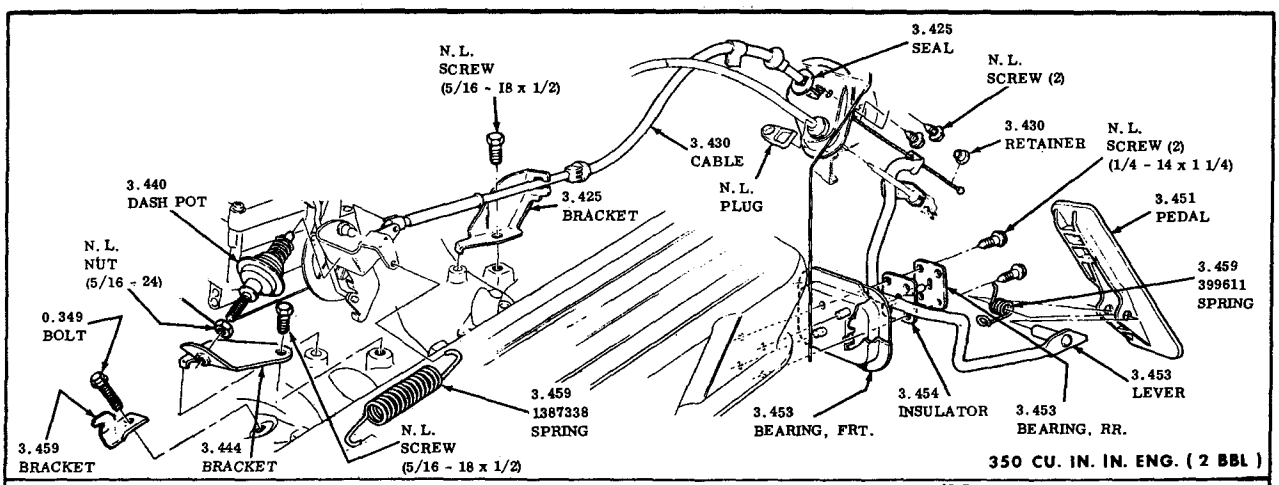

350 CU. IN. IN. ENG. (2 BBL)

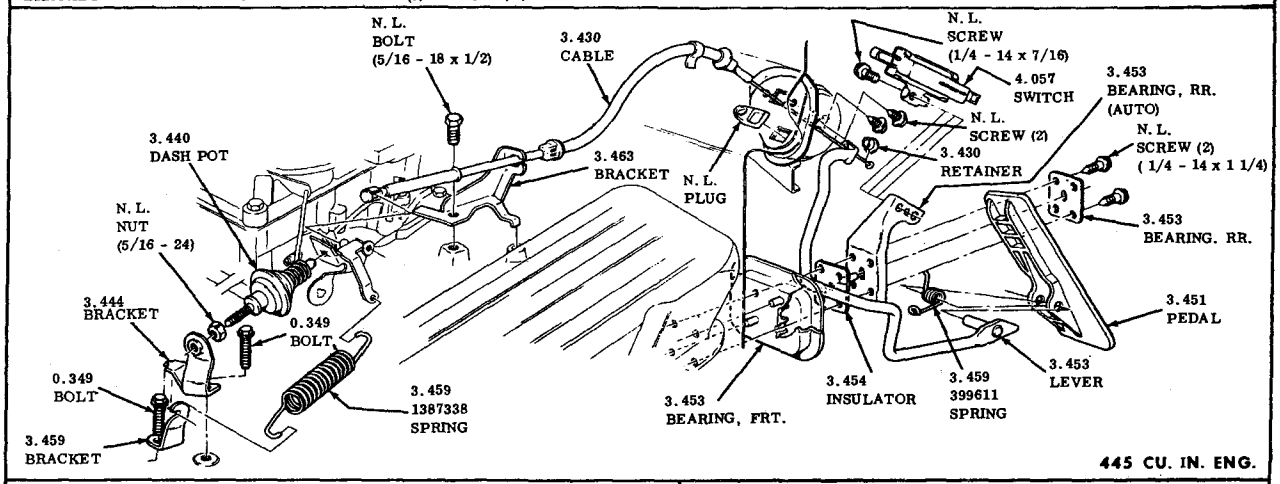

445 CU. IN. ENG.

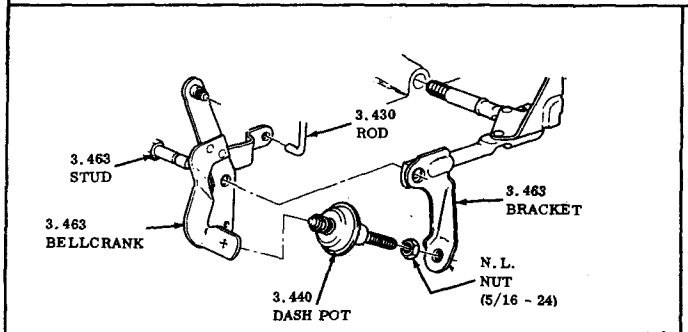

250 CU. IN. ENG. (MANUAL)

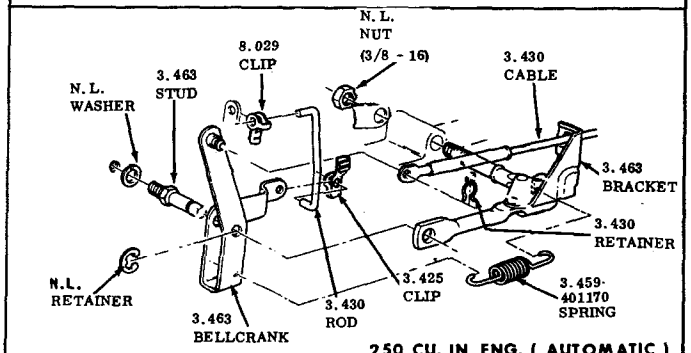

250 CU. IN. ENG. (AUTOMATIC)

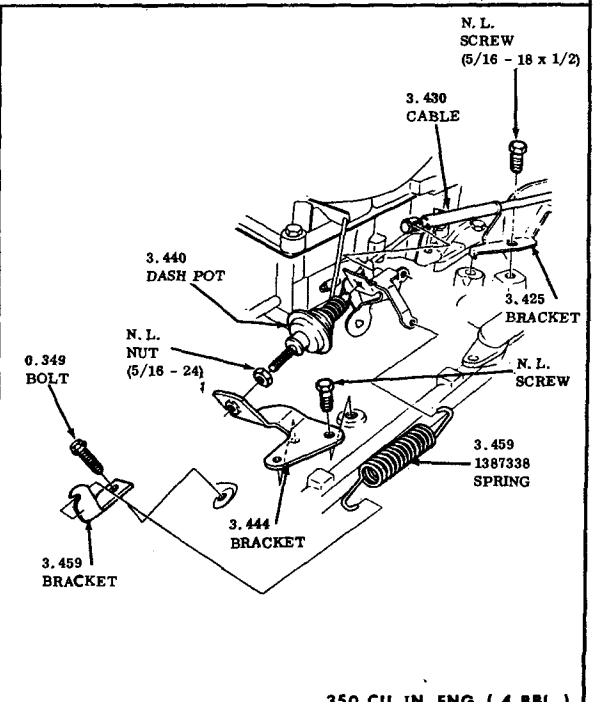

350 CU. IN. ENG. (4 BBL.)

THROTTLE CONTROL

1970-30-4000

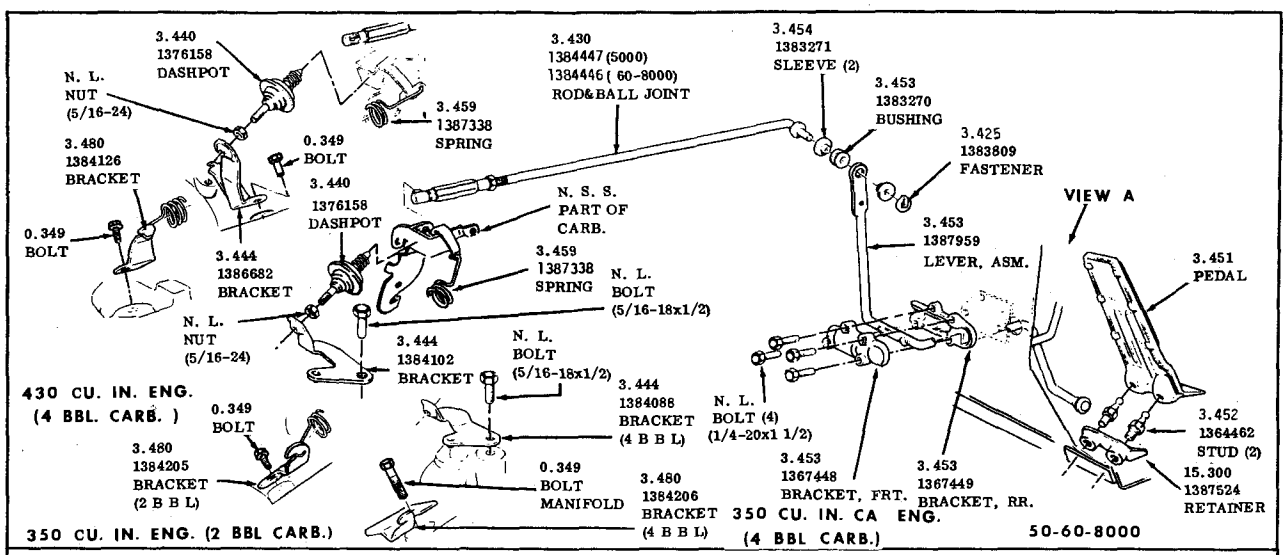

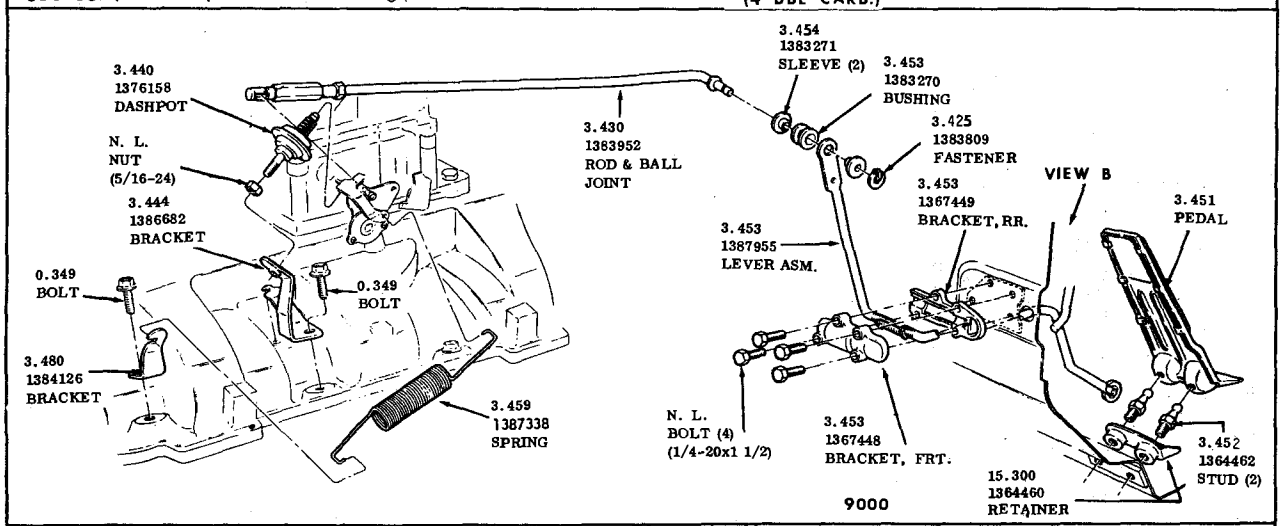

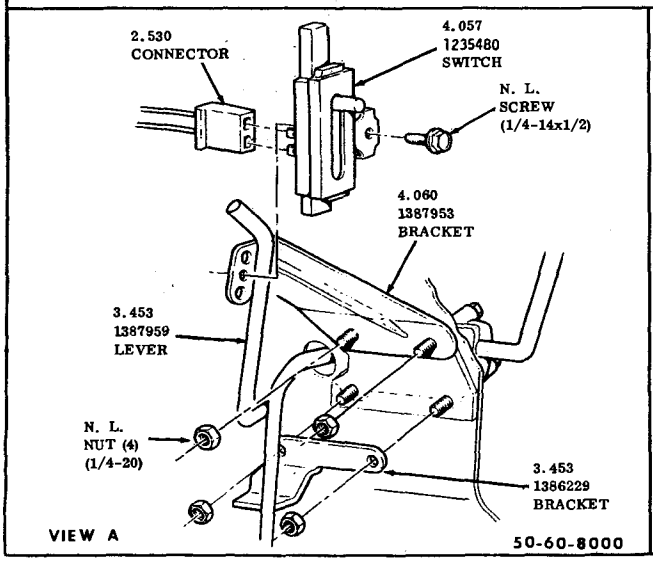

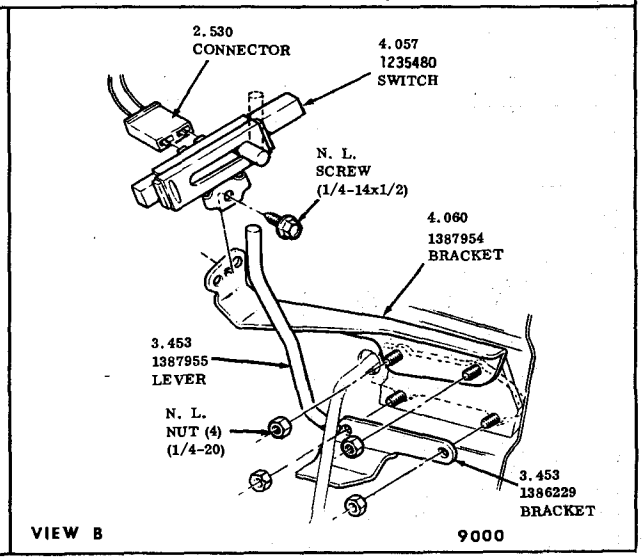

THROTTLE CONTROL
1969-1970 50-60-80-9000

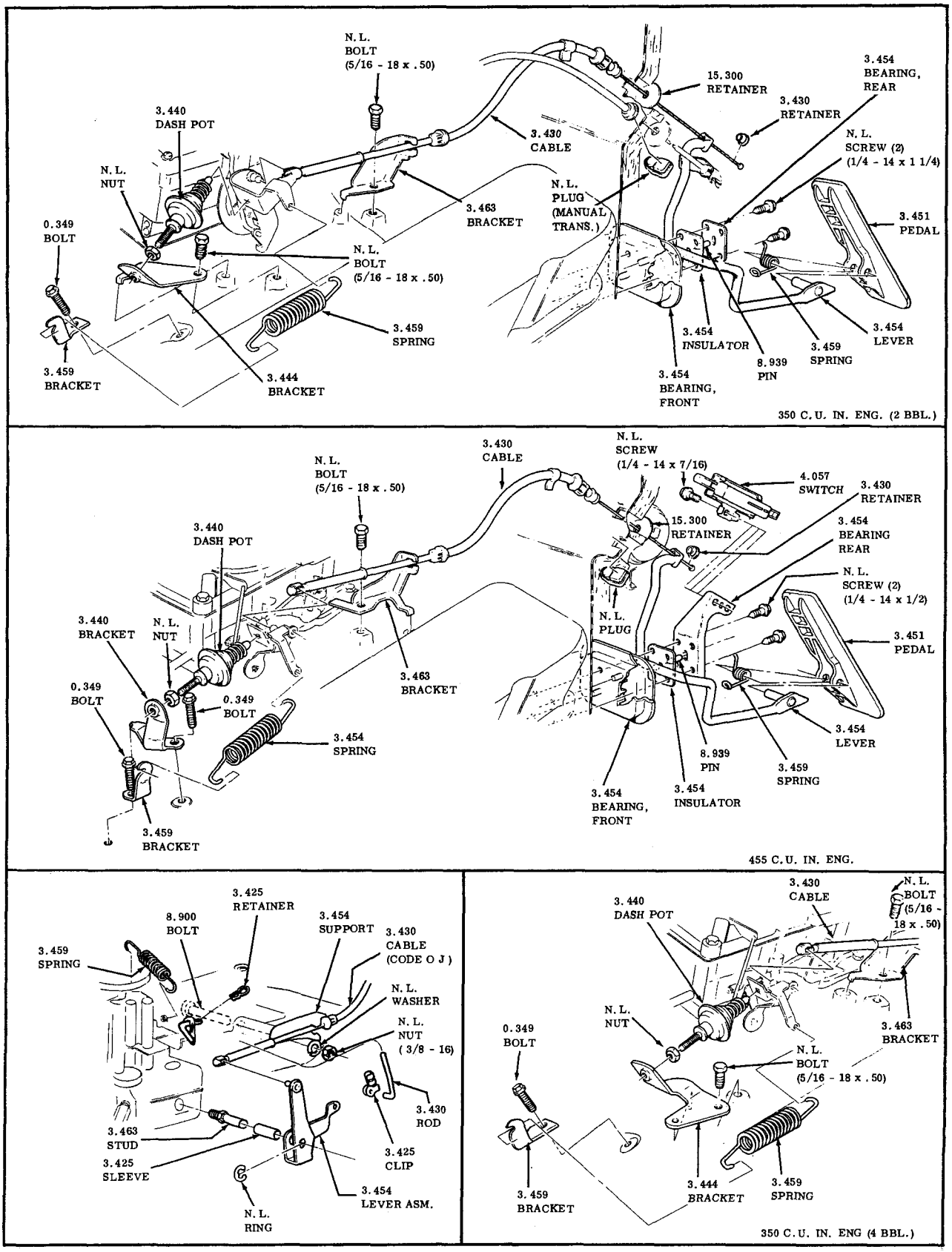

THROTTLE CONTROLS
1971-30-4000
(1st TYPE)

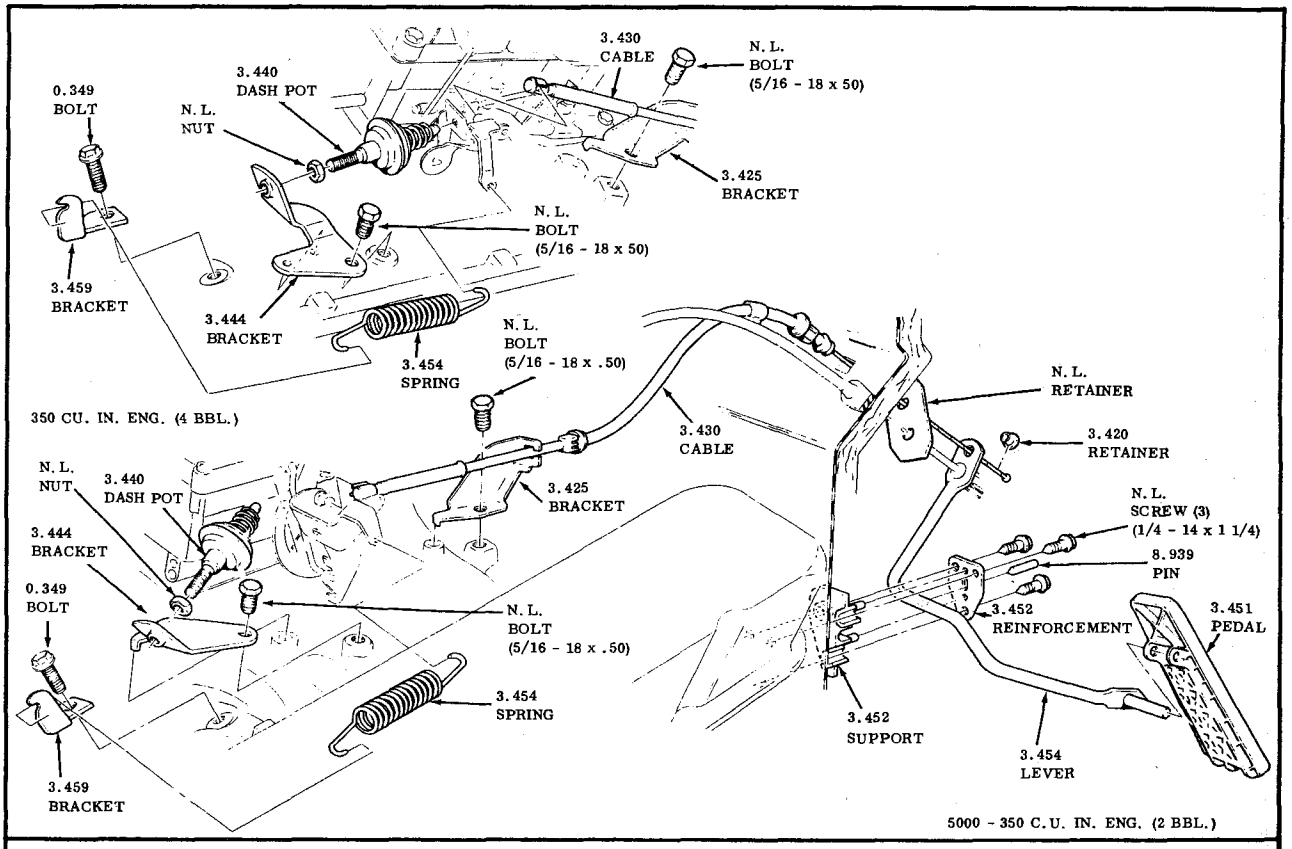

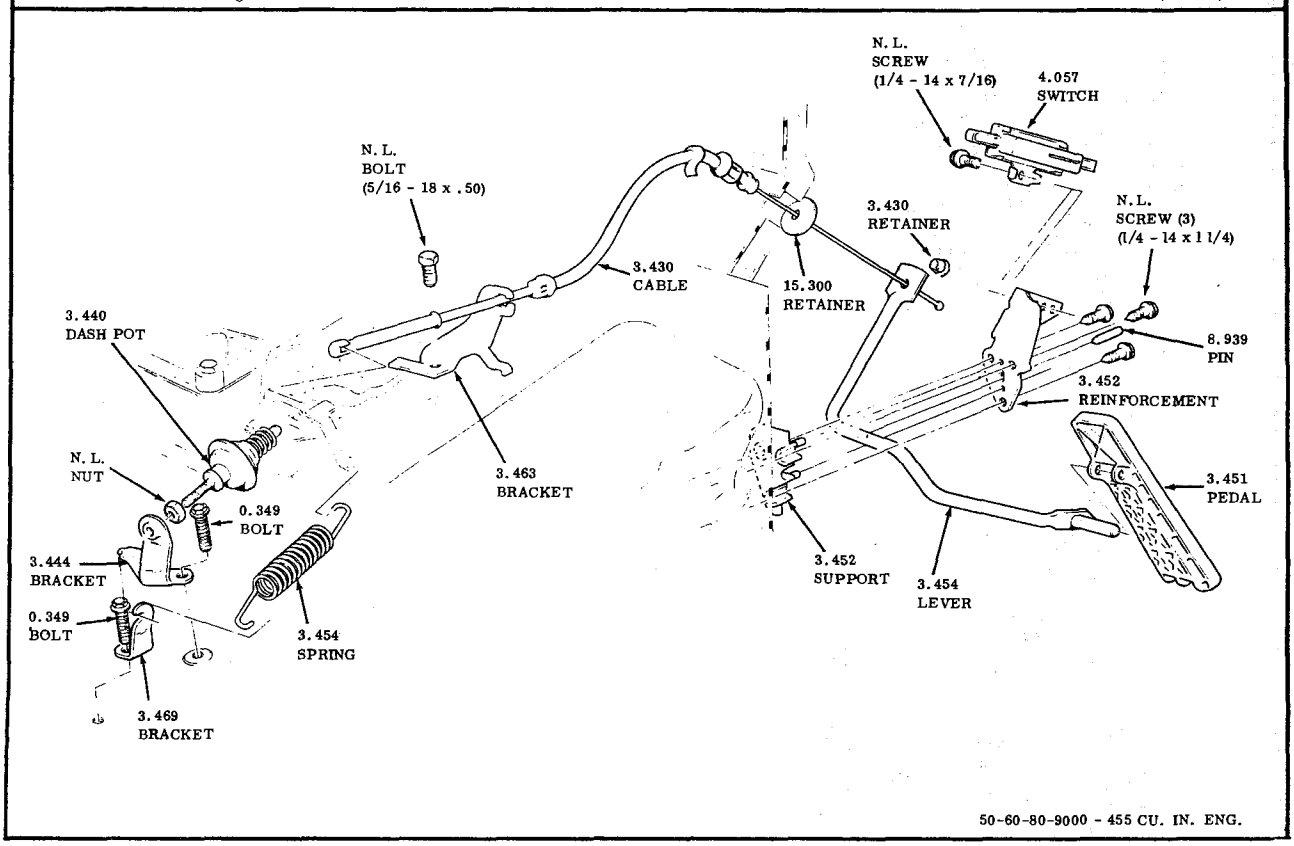

THROTTLE CONTROL
1971 - 50–60–80–9000
(1st TYPE)

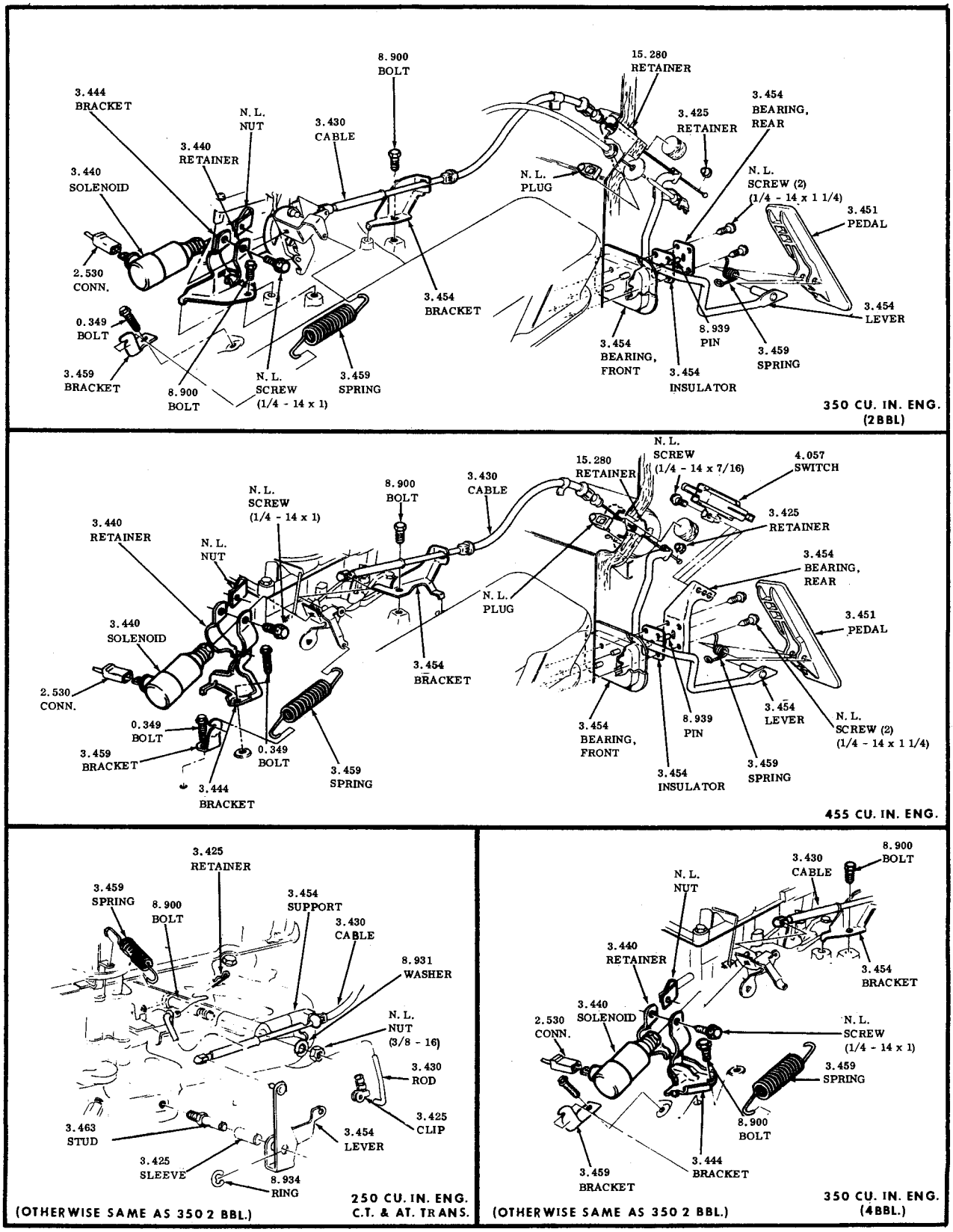

TYPICAL

THROTTLE CONTROL

1971-30-4000 (2ND TYPE)

1972-30-4000

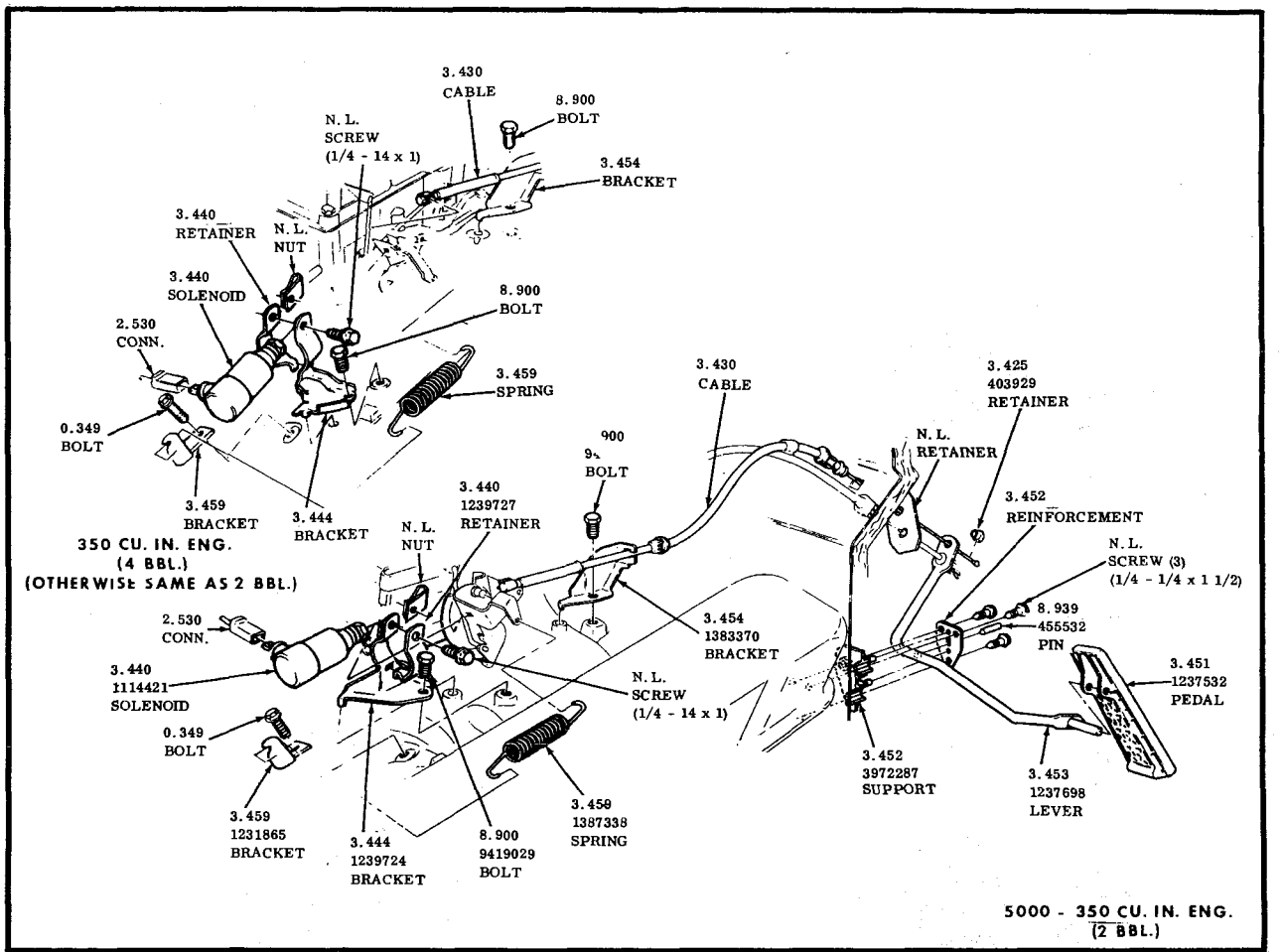

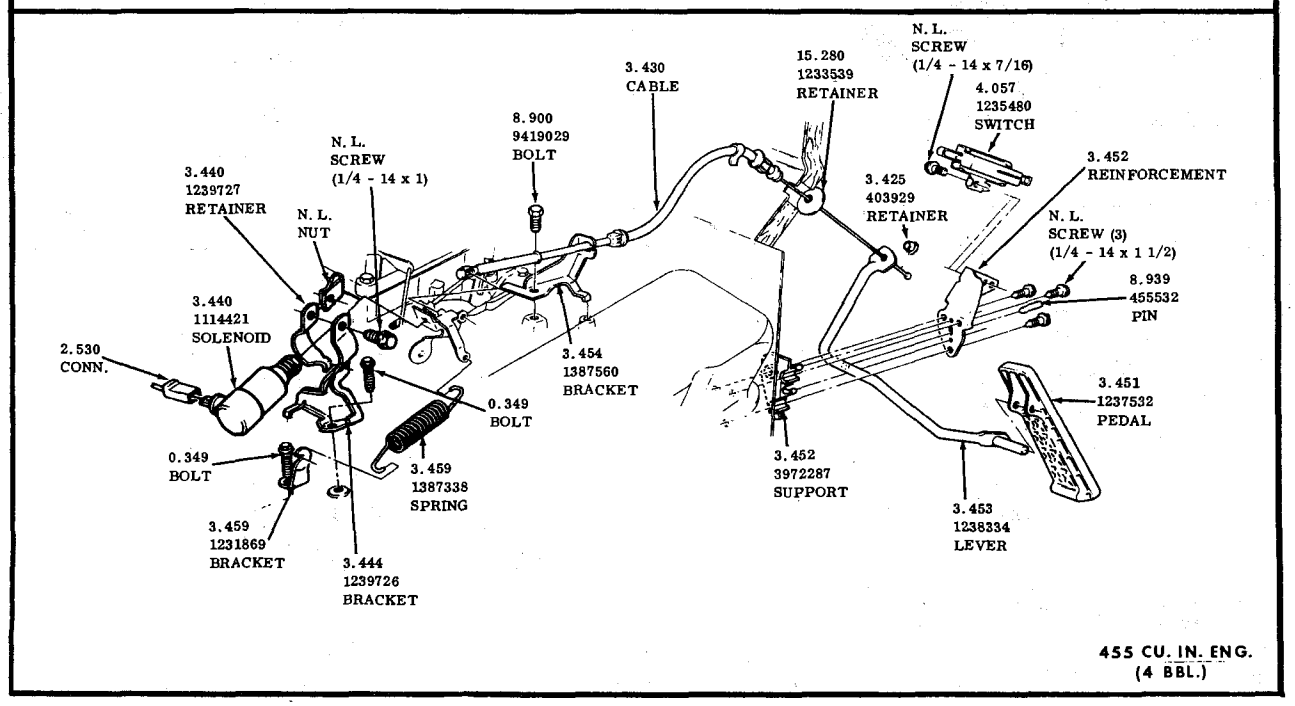

TYPICAL

THROTTLE CONTROL

1971-50-60-80-9000 (2ND. TYPE)

1972-50-60-80-9000

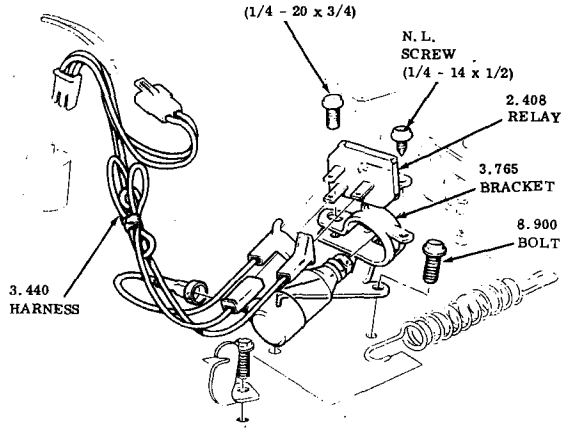

350 CU. IN. ENG.
(2BBL.)

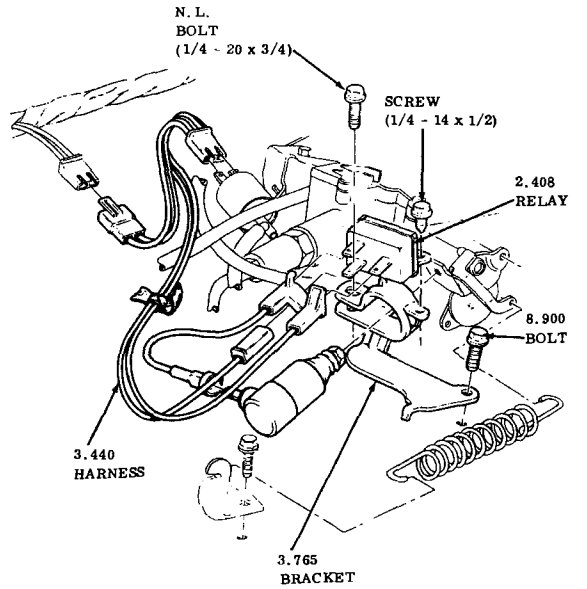

350 CU. IN. ENG.
(4BBL.)

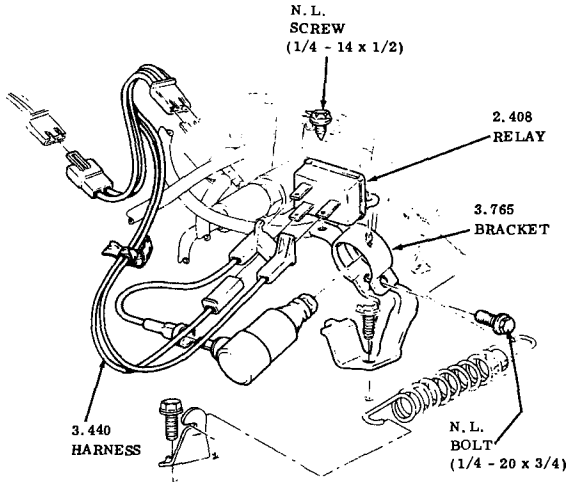

455 CU. IN. ENG.

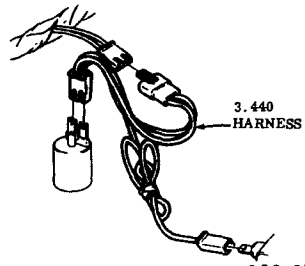

350 CU. IN. ENG.
WIRING HARN.
(2 BBL.)

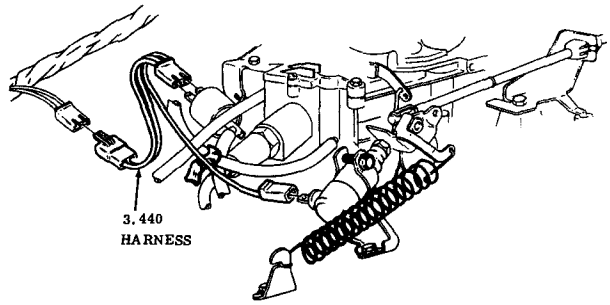

350 - 455 CU. IN. ENG.
WIRING HARN.
(4 BBL.)

TYPICAL
THROTTLE CONTROL-SOLENOID
1971-ALL MANUAL TRANSMISSION (2ND TYPE)
1972-ALL MANUAL TRANSMISSION

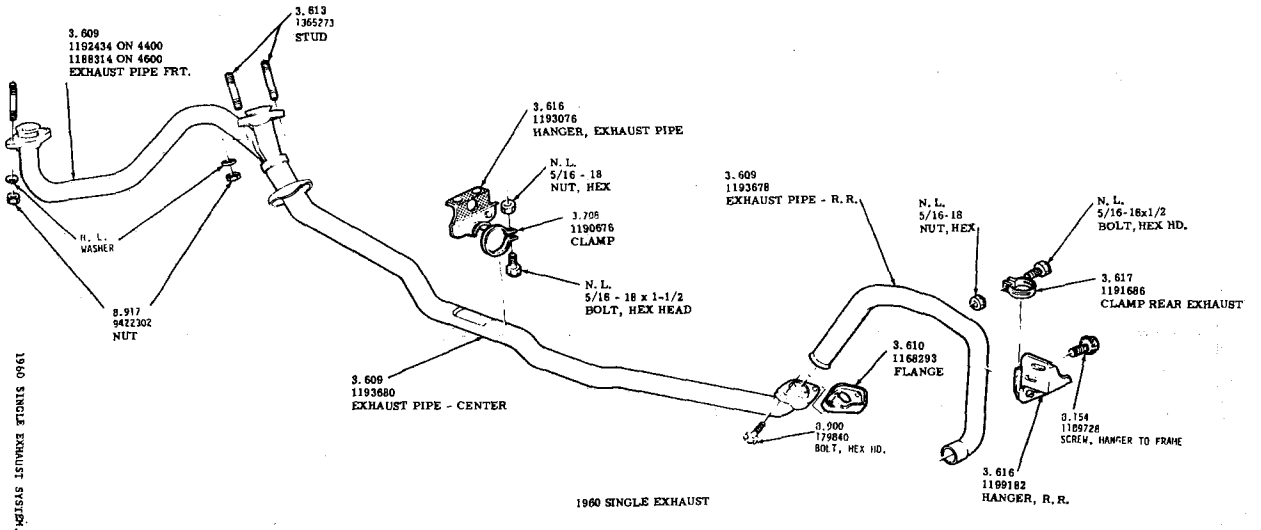

1960 SINGLE EXHAUST

1960 SINGLE EXHAUST SYSTEM.

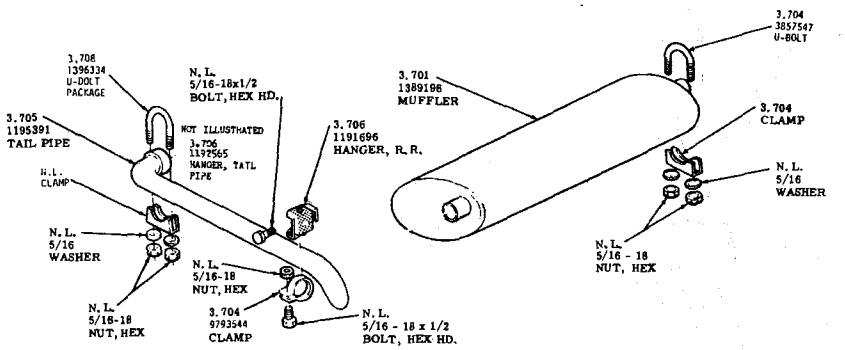

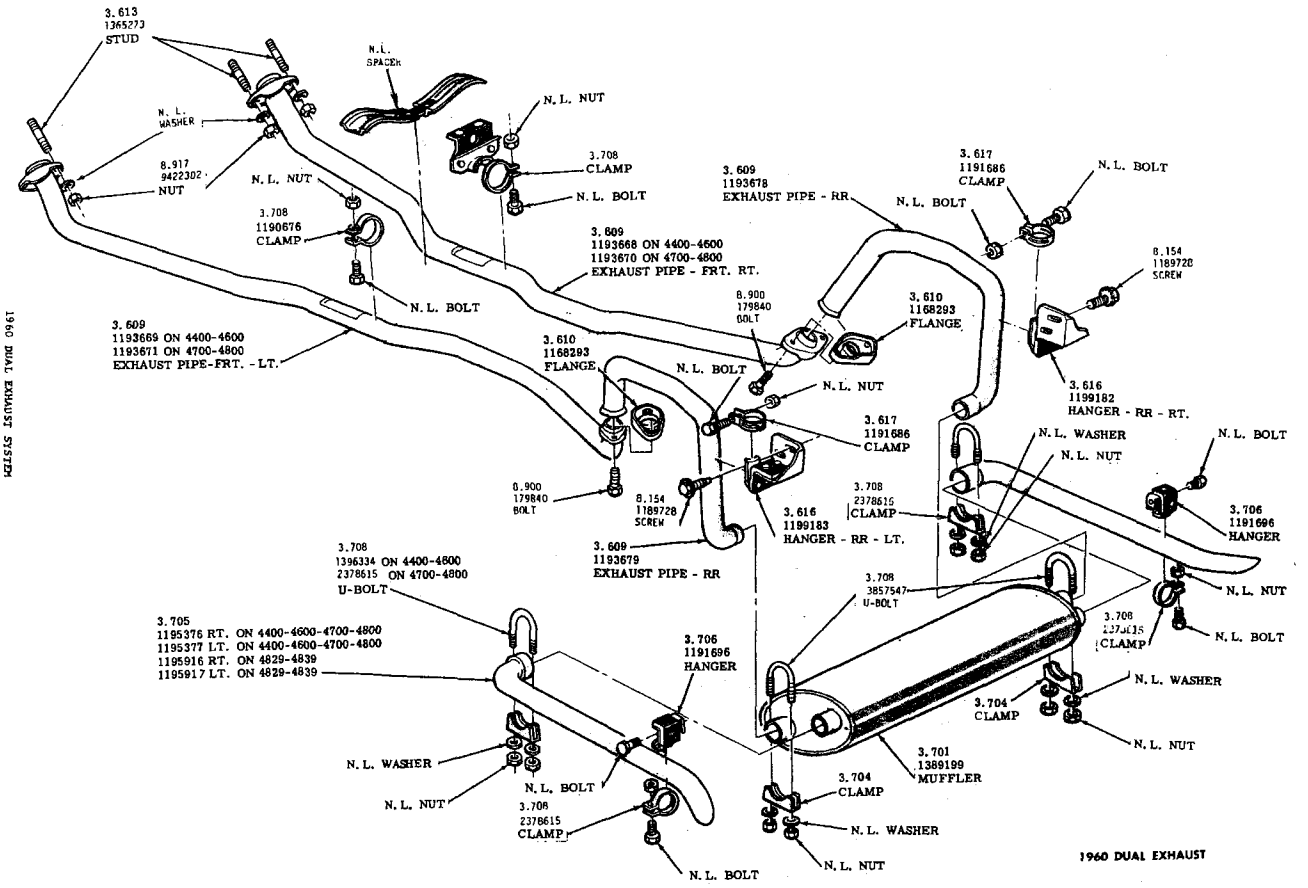
3.613
1365273
STUD
N. L.
WASHER
8.917
9422302
NUT
N. L. NUT
3.708
1190676
CLAMP
N. L.
SPACER
N. L. NUT
3.708
CLAMP
N. L. BOLT
3.609
1193668 ON 4400-4600
1193670 ON 4700-4800
EXHAUST PIPE - FRT. RT.
N. L. BOLT
3.609
1193669 ON 4400-4600
1193671 ON 4700-4800
EXHAUST PIPE-FRT. - LT.
3.610
1168293
FLANGE
N. L. BOLT
8.900
179840
BOLT
8.154
1189728
SCREW
3.609
1193679
EXHAUST PIPE - RR
3.609
1193678
EXHAUST PIPE - RR
N. L. BOLT
8.900
179840
BOLT
3.610
1168293
FLANGE
N. L. NUT
3.617
1191686
CLAMP
3.616
1199183
HANGER - RR - LT.
3.617
1191686
CLAMP
N. L. BOLT
8.154
1189728
SCREW
3.616
1199182
HANGER - RR - RT.
N. L. WASHER
N. L. NUT
3.708
2378615
CLAMP
N. L. BOLT
3.706
1191696
HANGER
N. L. NUT
3.708
2378615
CLAMP
N. L. BOLT
3.708
3857547
U-BOLT
3.704
CLAMP
N. L. WASHER
N. L. NUT
3.701
1389199
MUFFLER
3.704
CLAMP
N. L. WASHER
N. L. NUT
3.708
1396334 ON 4400-4600
2378615 ON 4700-4800
U-BOLT
3.705
1195376 RT. ON 4400-4600-4700-4800
1195377 LT. ON 4400-4600-4700-4800
1195916 RT. ON 4829-4839
1195917 LT. ON 4829-4839
3.706
1191696
HANGER
N. L. WASHER
N. L. NUT
N. L. BOLT
3.708
2378615
CLAMP
N. L. BOLT
1960 DUAL EXHAUST
1960 DUAL EXHAUST SYSTEM

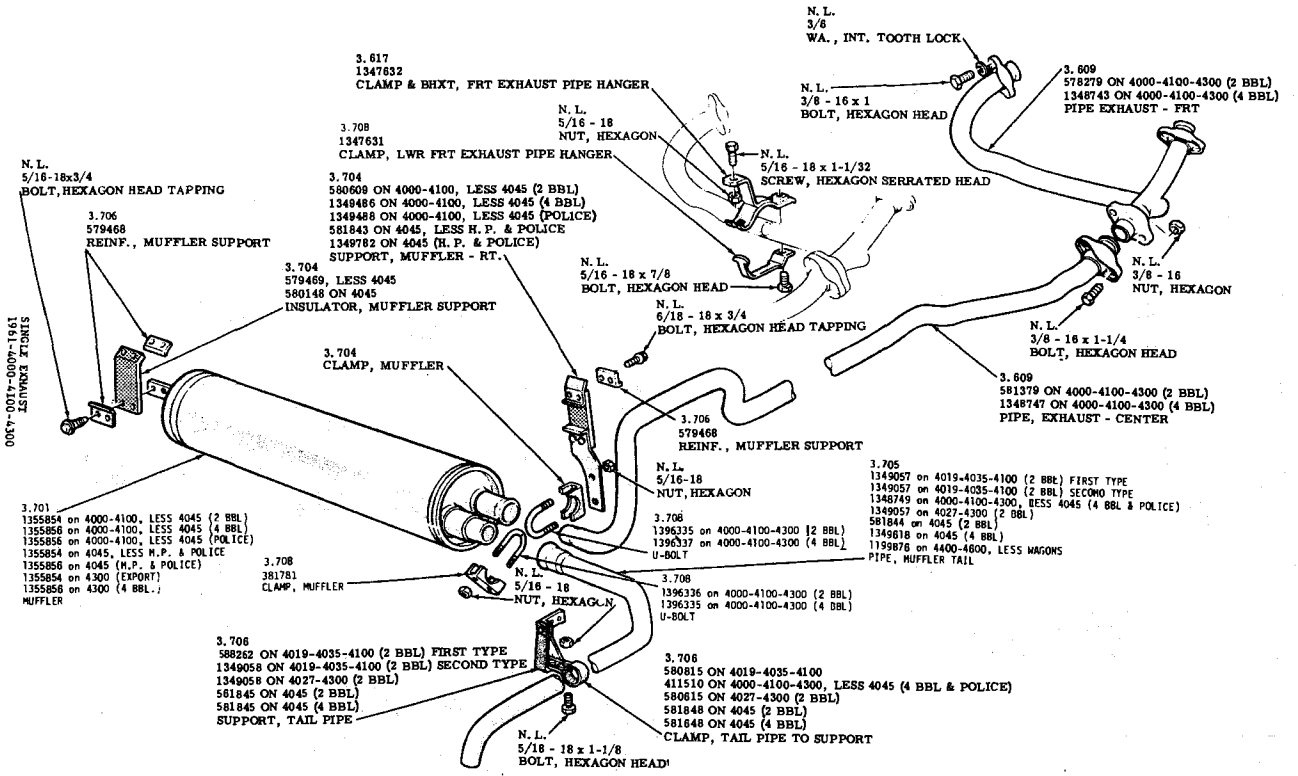

SINGLE EXHAUST
1961 4000-4100-4300

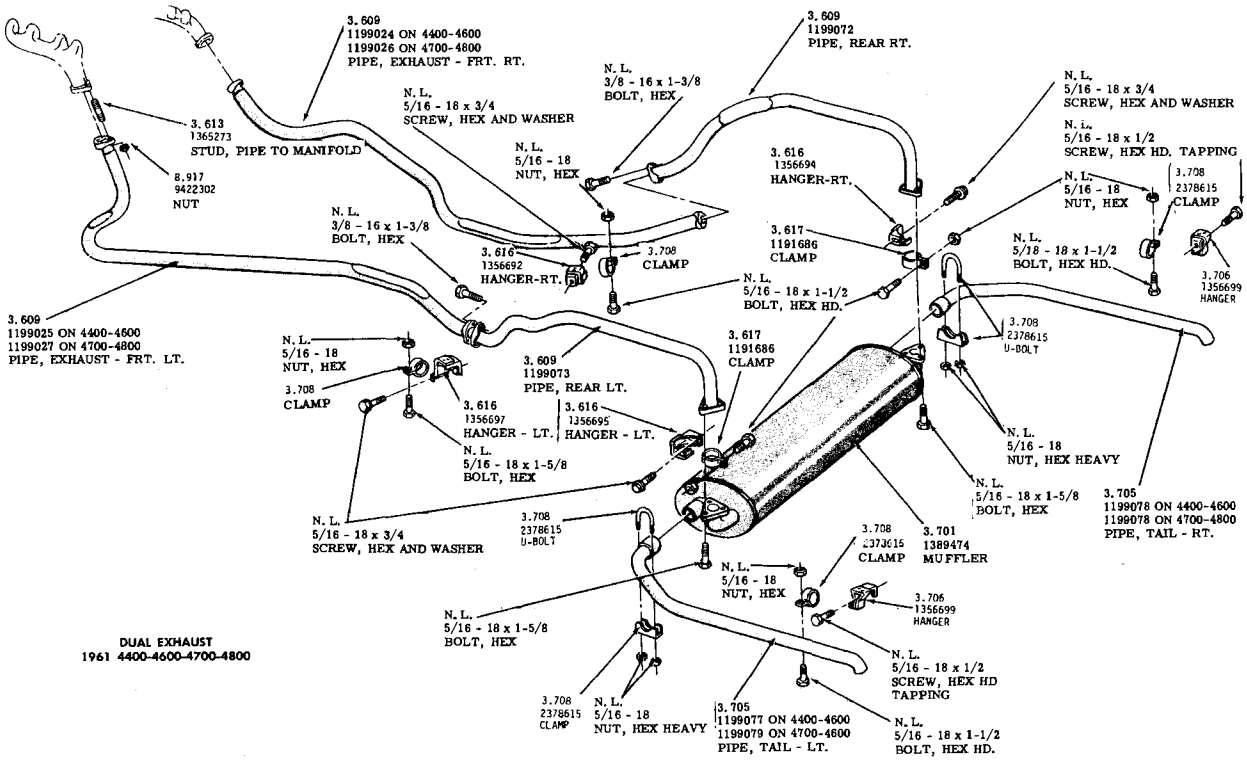

DUAL EXHAUST
1961 4400-4600-4700-4800

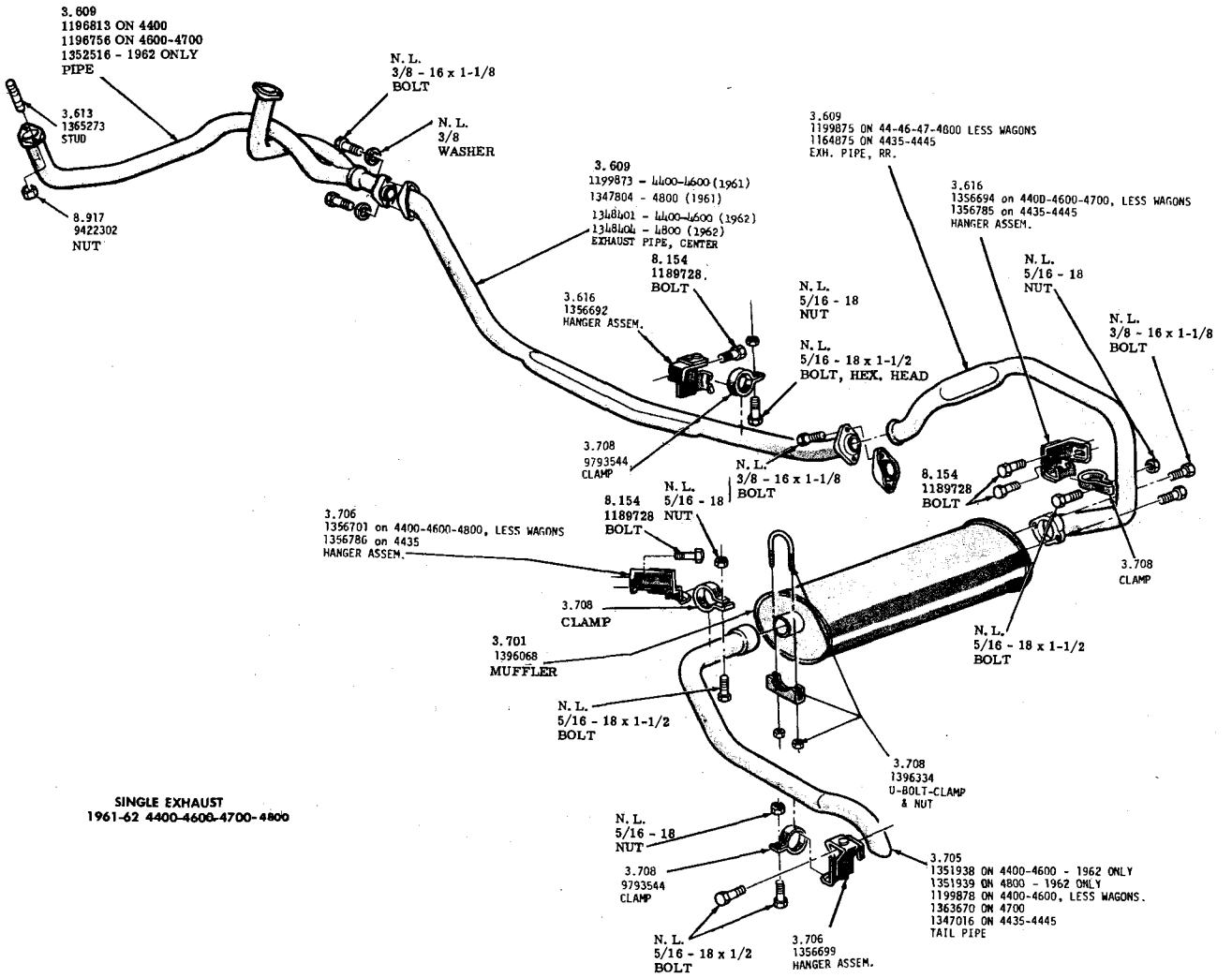

SINGLE EXHAUST
1961-62 4400-4600-4700-4800

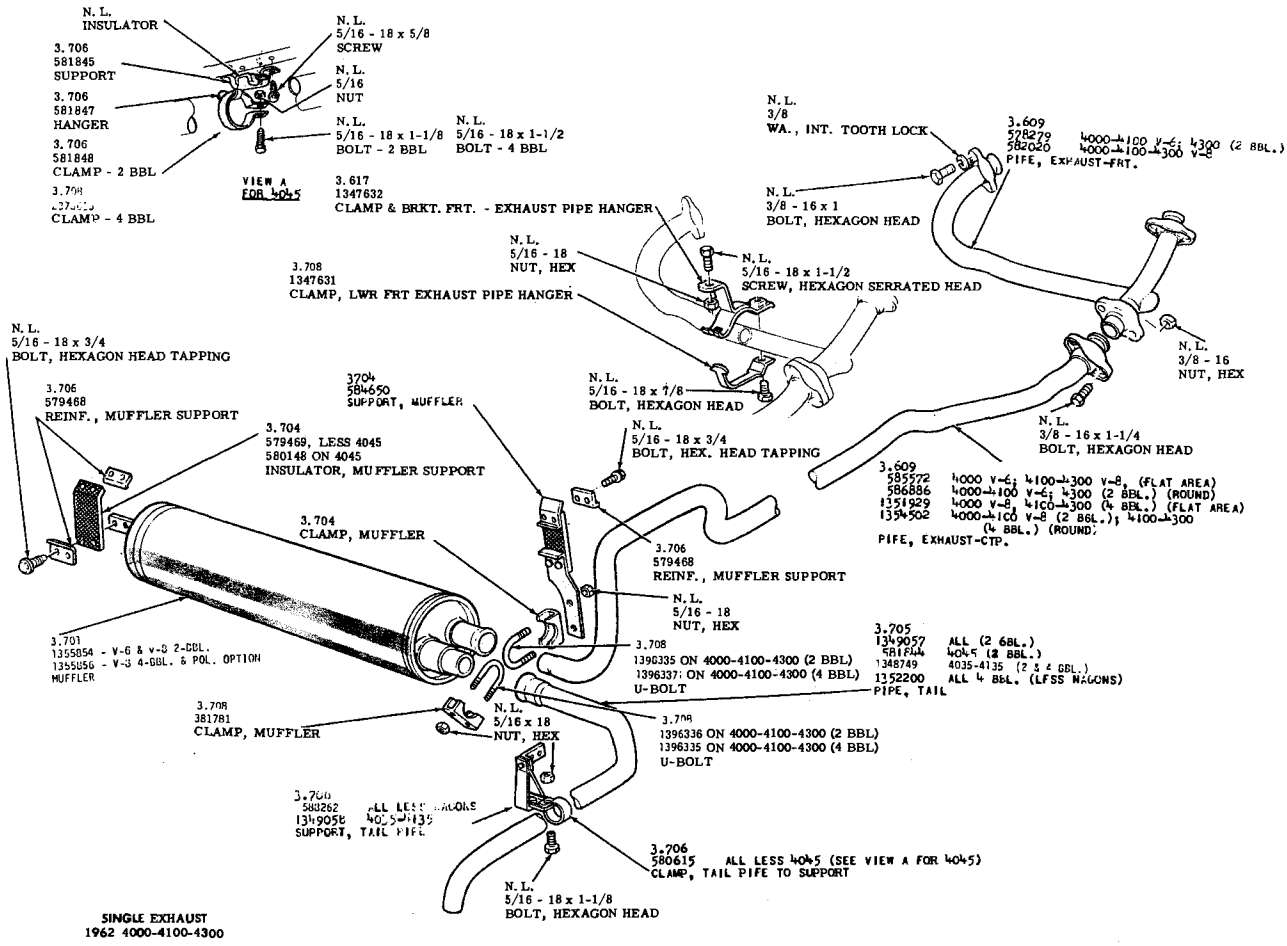

SINGLE EXHAUST
1962 4000-4100-4300

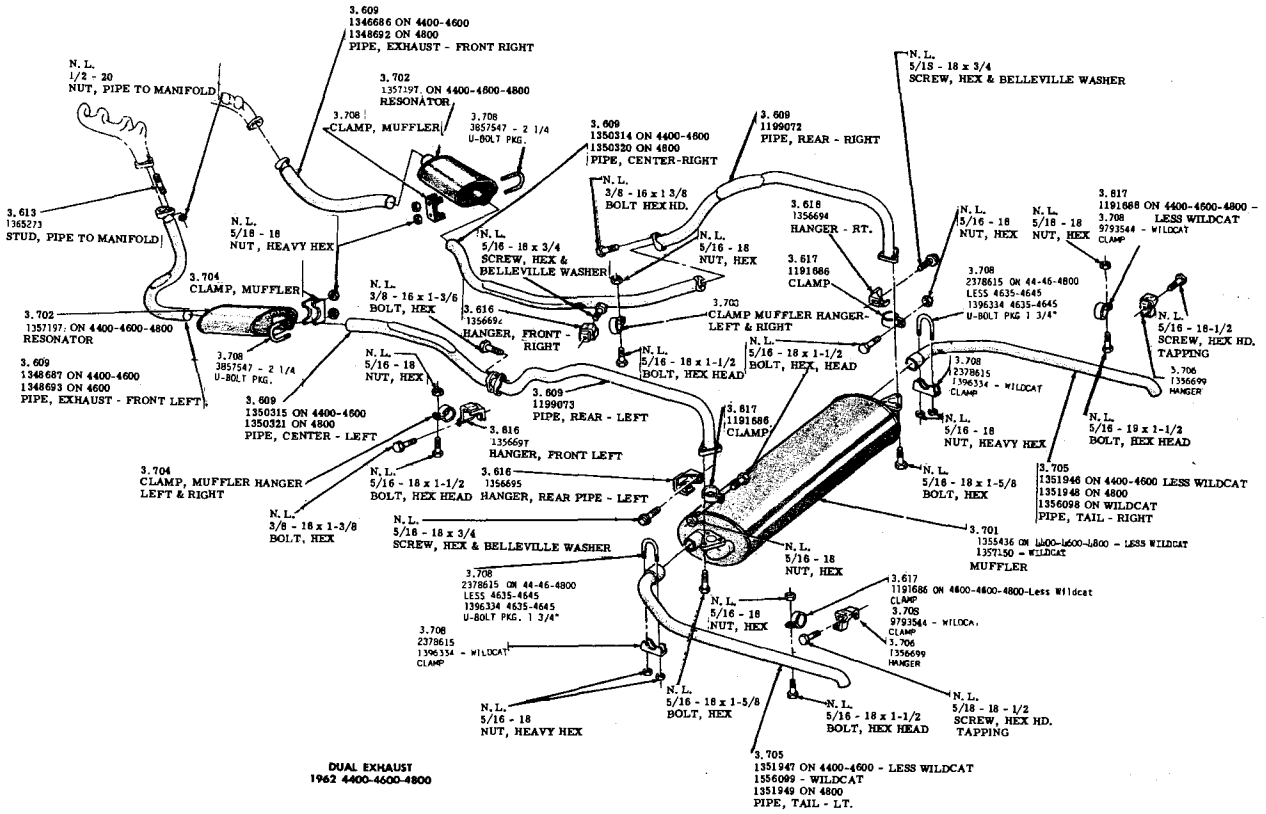

DUAL EXHAUST
1962 4400-4600-4800

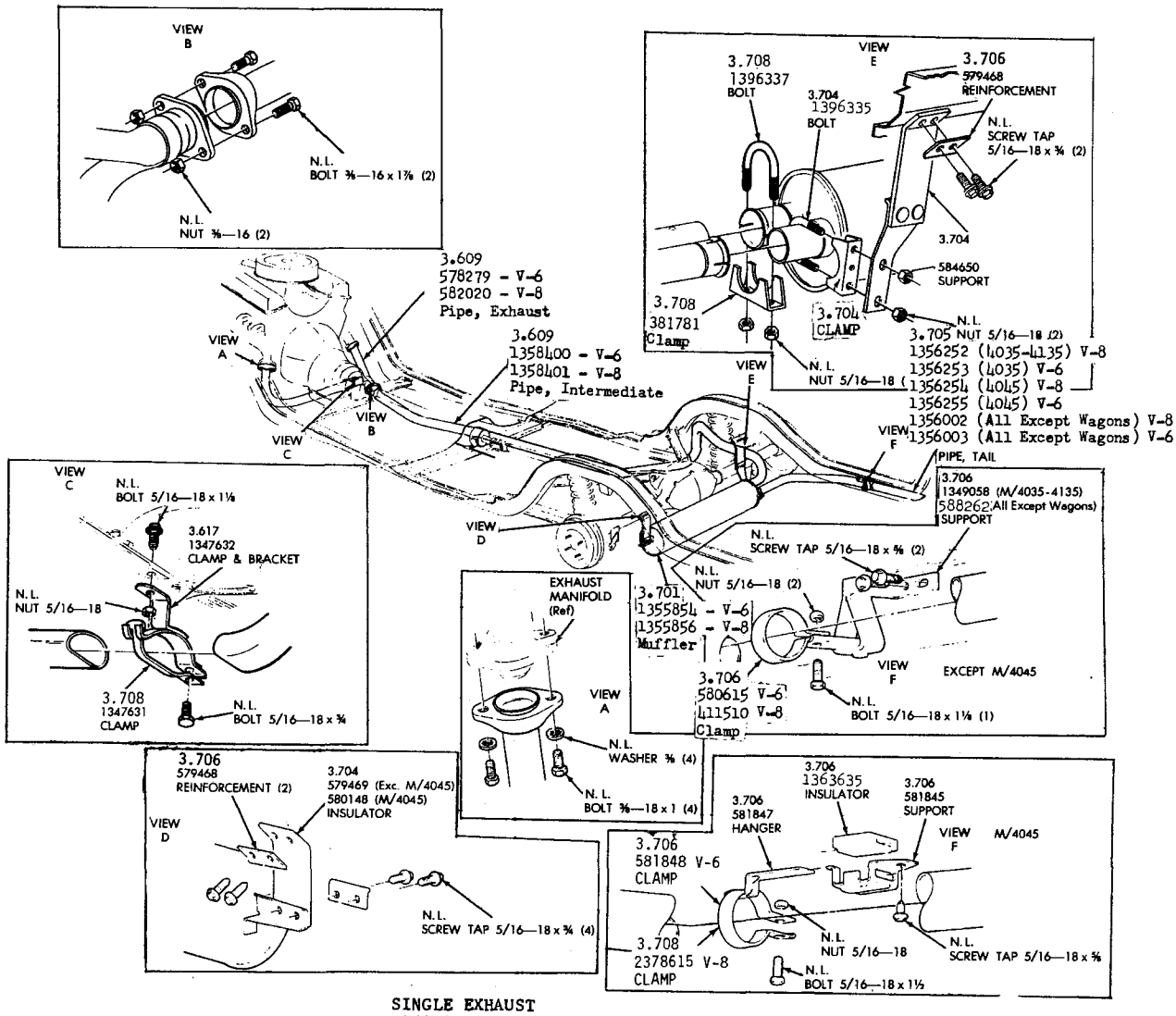

SINGLE EXHAUST
1963-4000-4100-4300

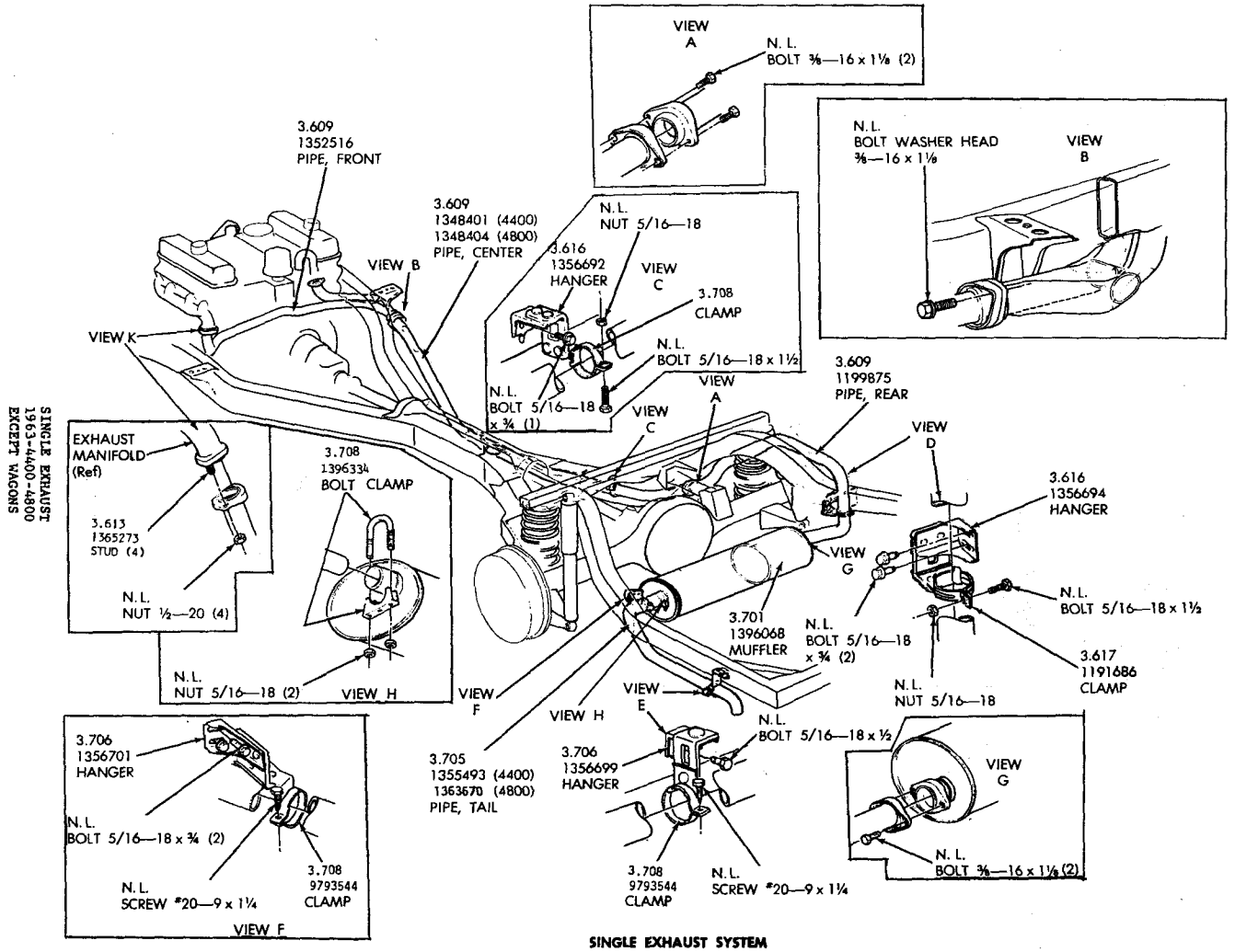

SINGLE EXHAUST SYSTEM
1963 SERIES — 4400-4800
EXCEPT WAGONS

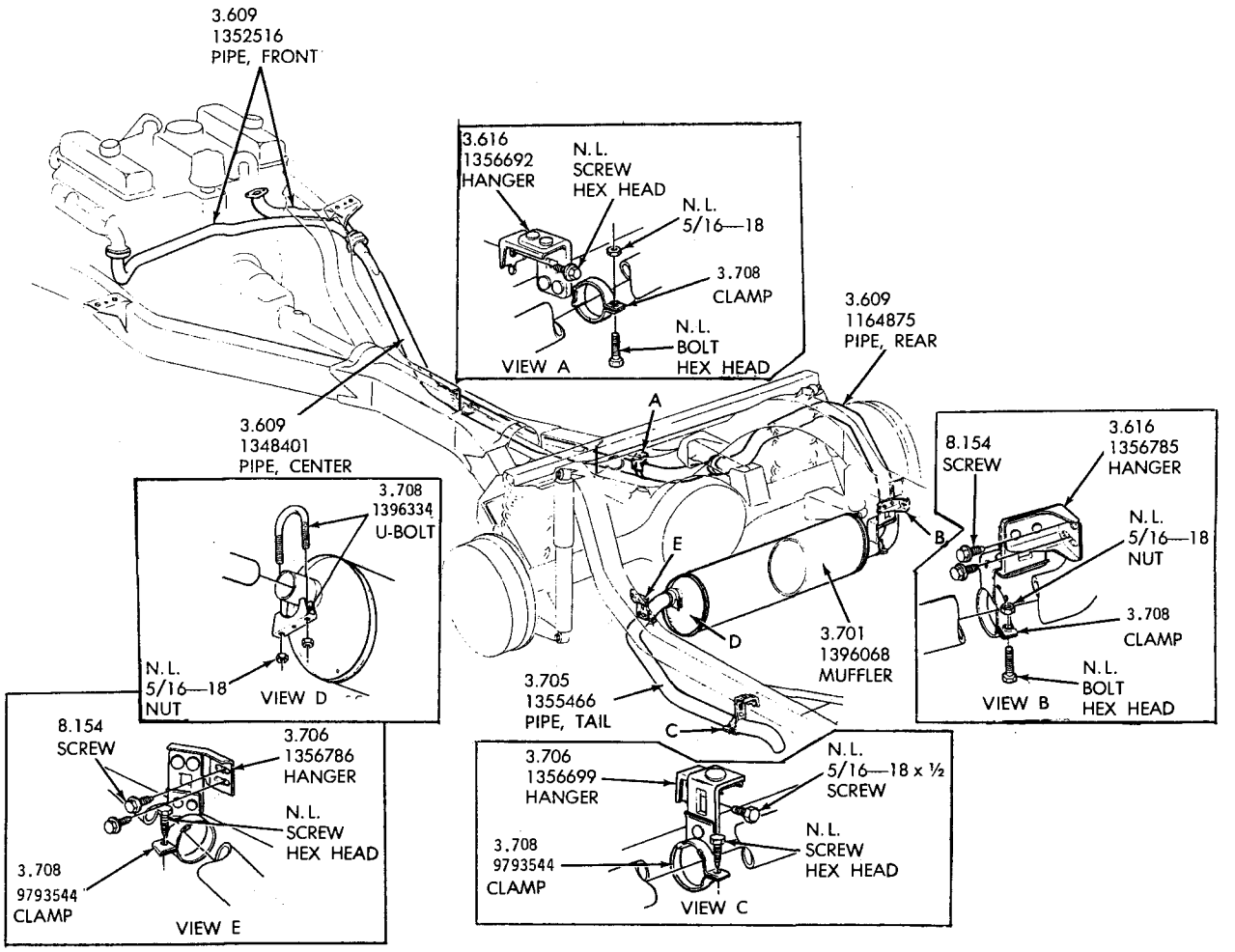

SINGLE EXHAUST
1963-4400-4600
WAGONS ONLY

SINGLE EXHAUST SYSTEM
1963 — 4400 - 4600
WAGONS ONLY

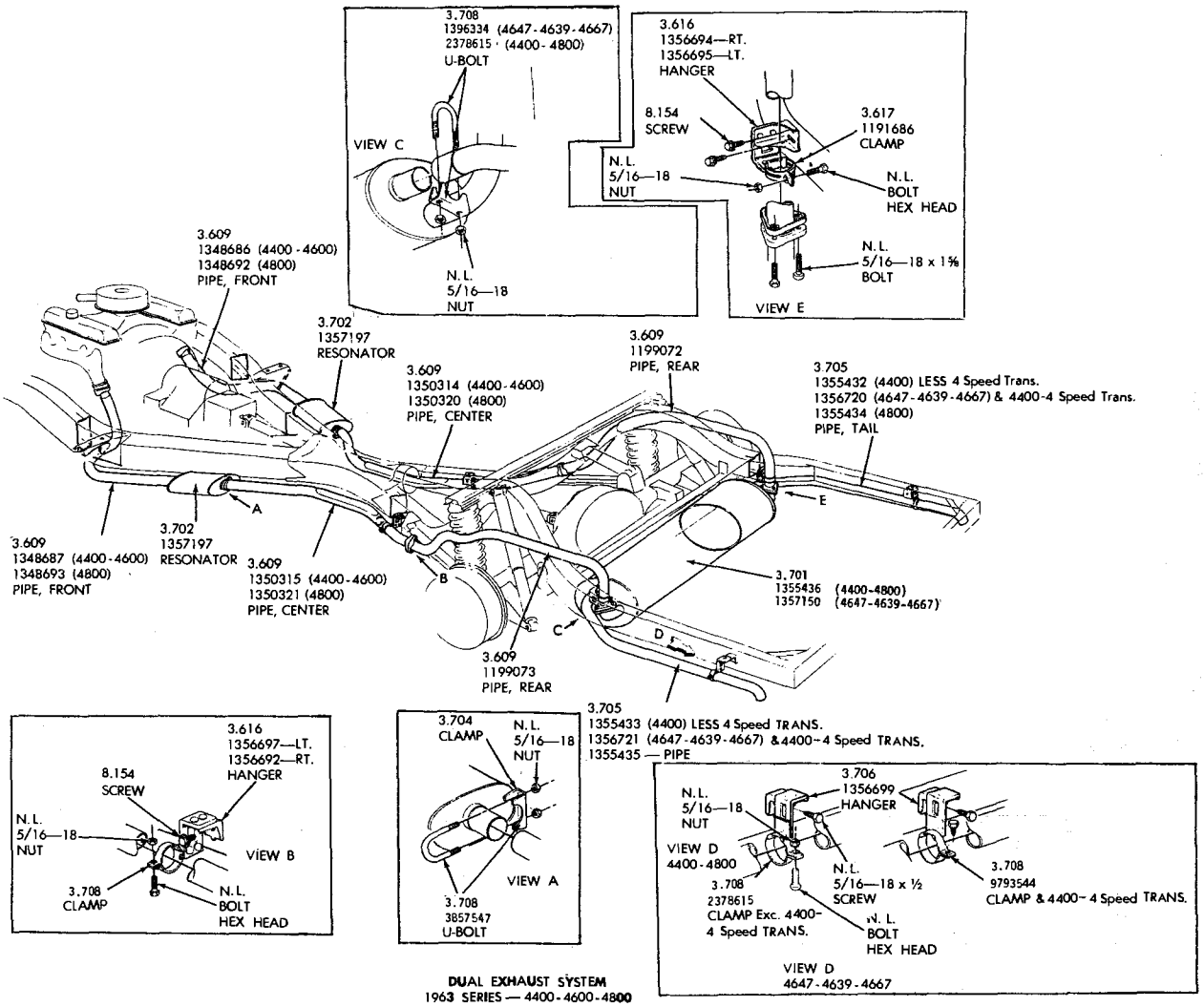

DUAL EXHAUST SYSTEM
1963 SERIES — 4400-4600-4800

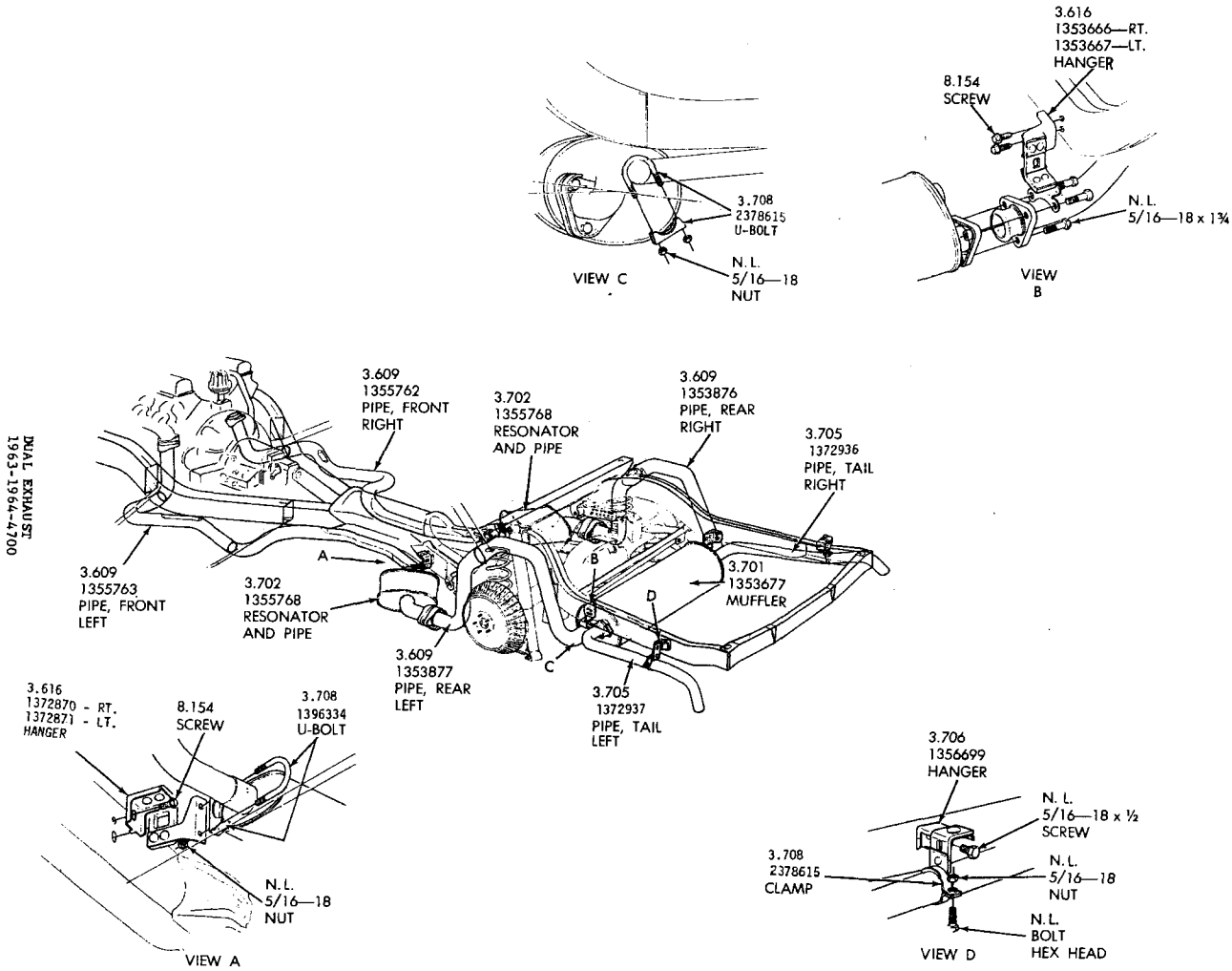

DUAL EXHAUST SYSTEM
1963—1964—4700

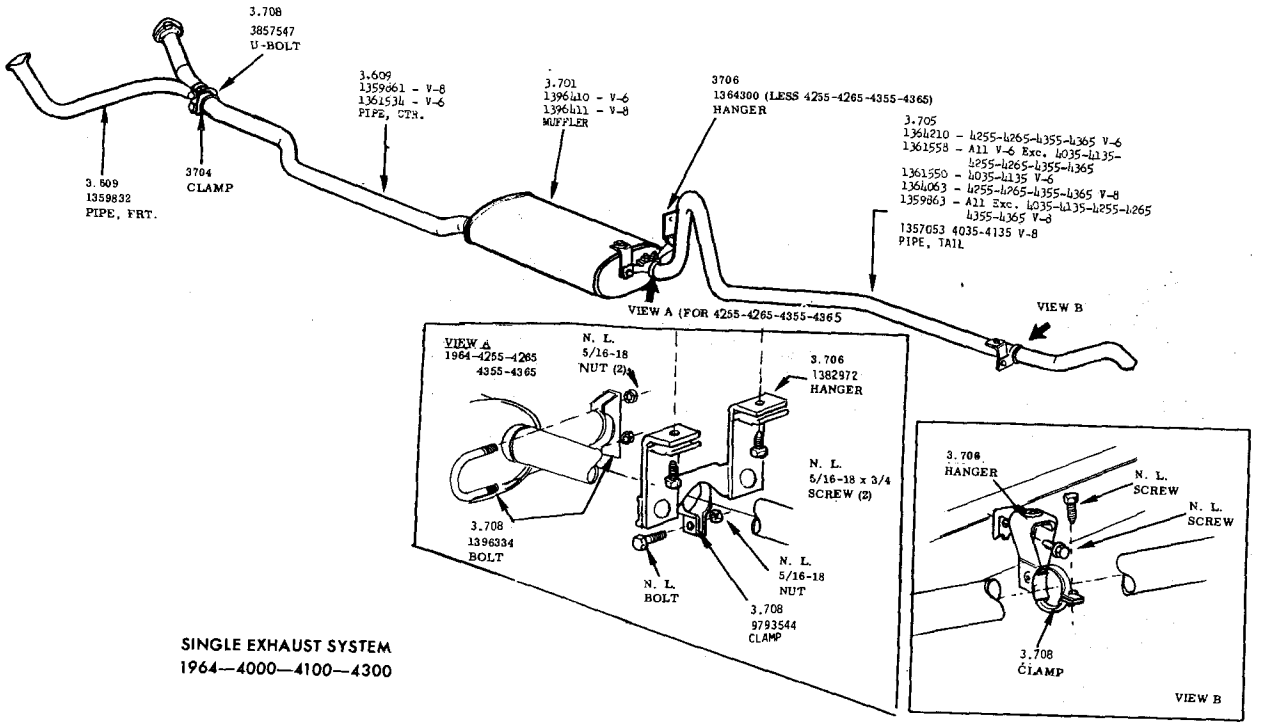

SINGLE EXHAUST SYSTEM
1964—4000—4100—4300

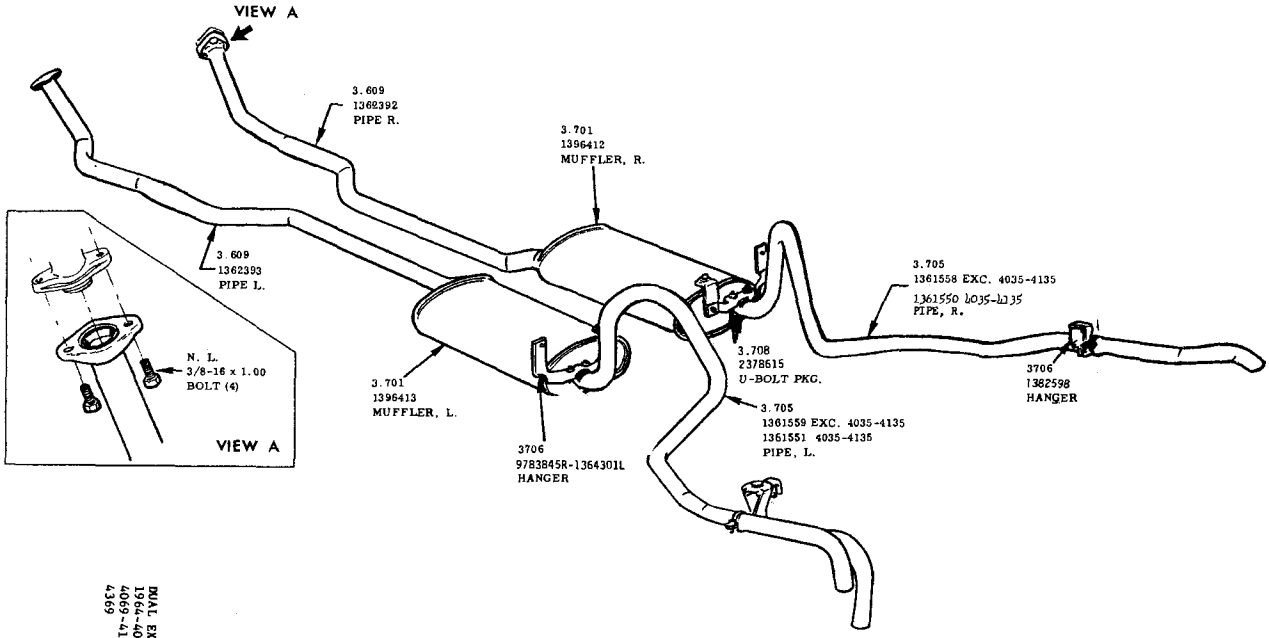

DUAL EXHAUST
1964-4027-4035-4067
4069-4100-4337-4367
4369

DUAL EXHAUST SYSTEM
1964—4027—4035—4067—4069—4100—
4337—4367—4369

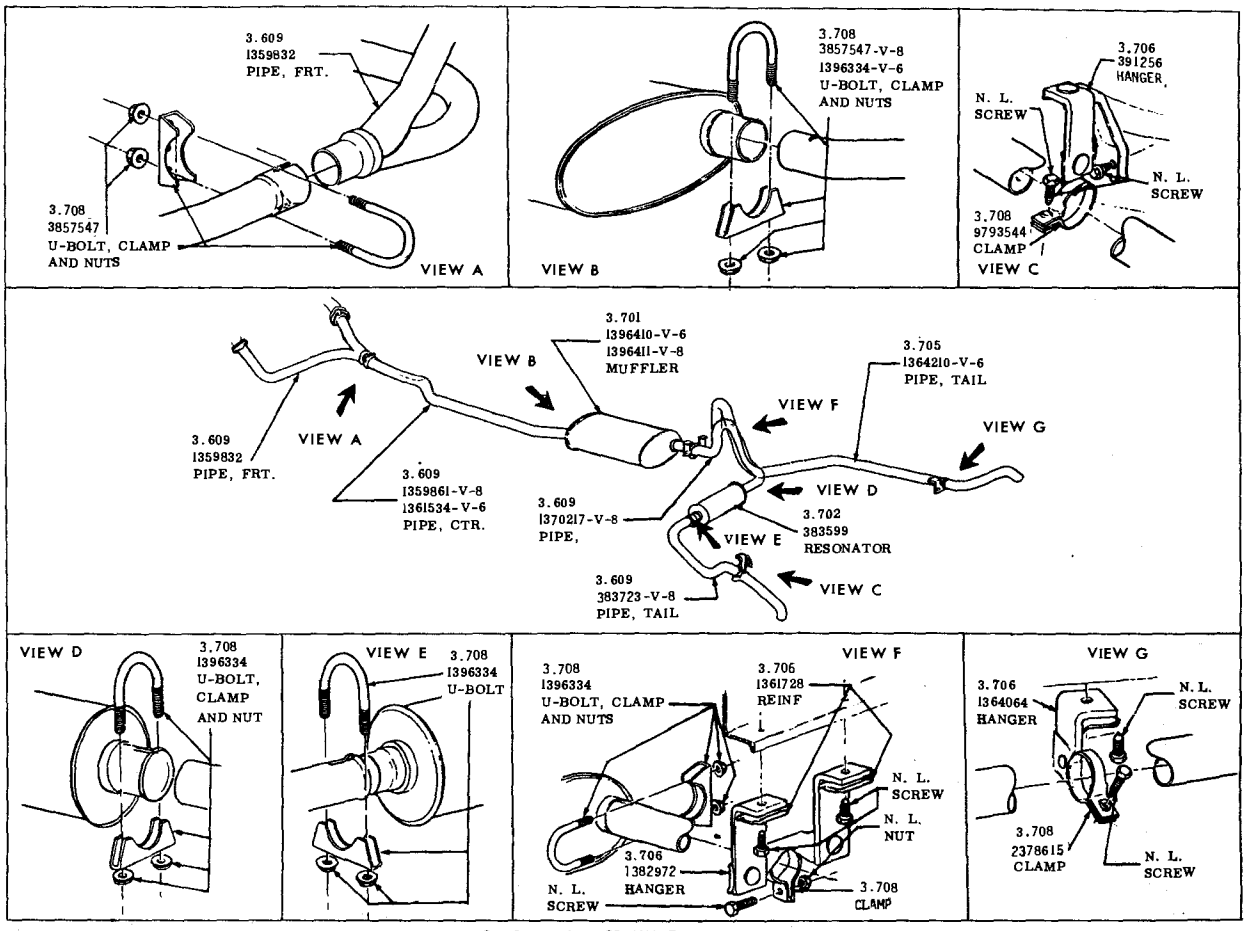

SINGLE EXHAUST SYSTEM
1964-SKYLARK WAGONS

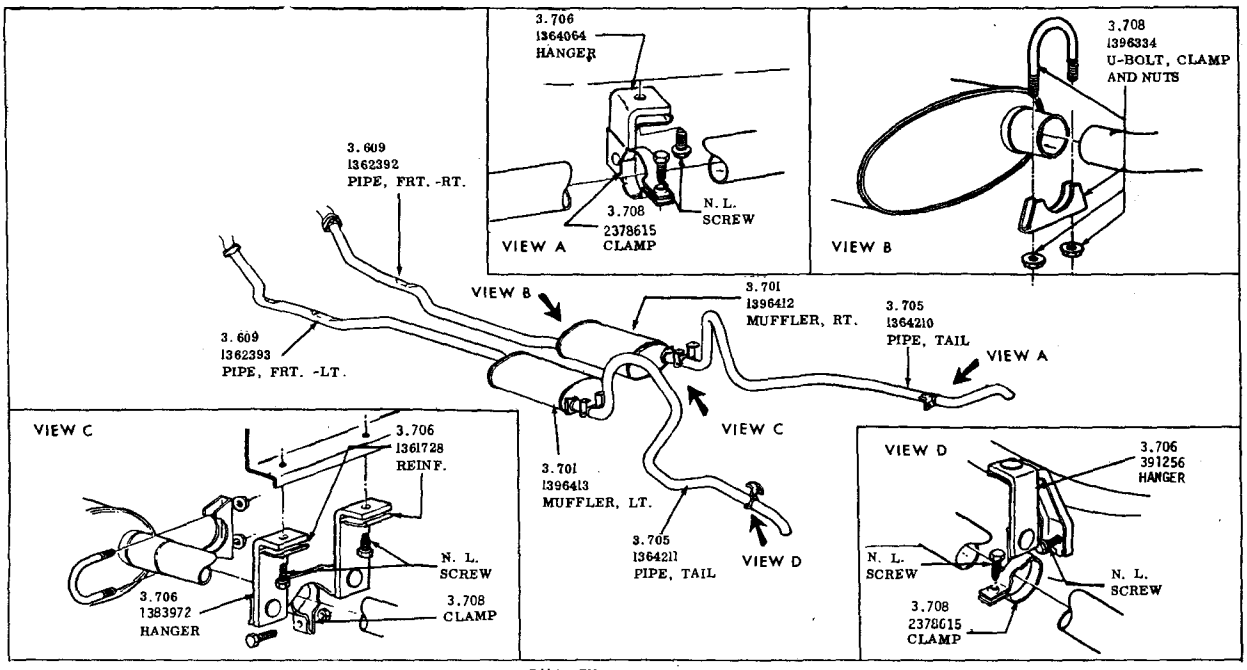

DUAL EXHAUST SYSTEM
1964—SKYLARK WAGONS

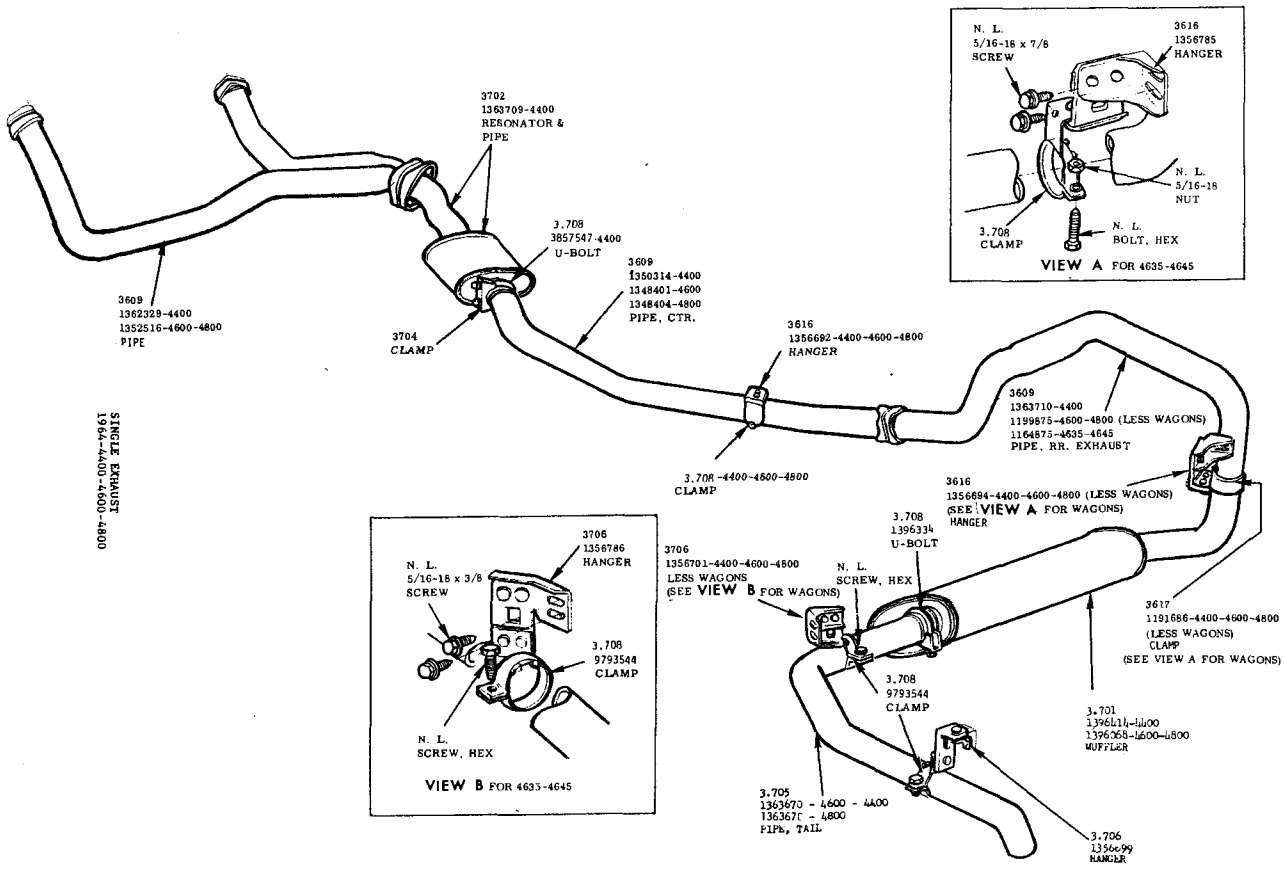

SINGLE EXHAUST SYSTEM
1964—4400—4600—4800

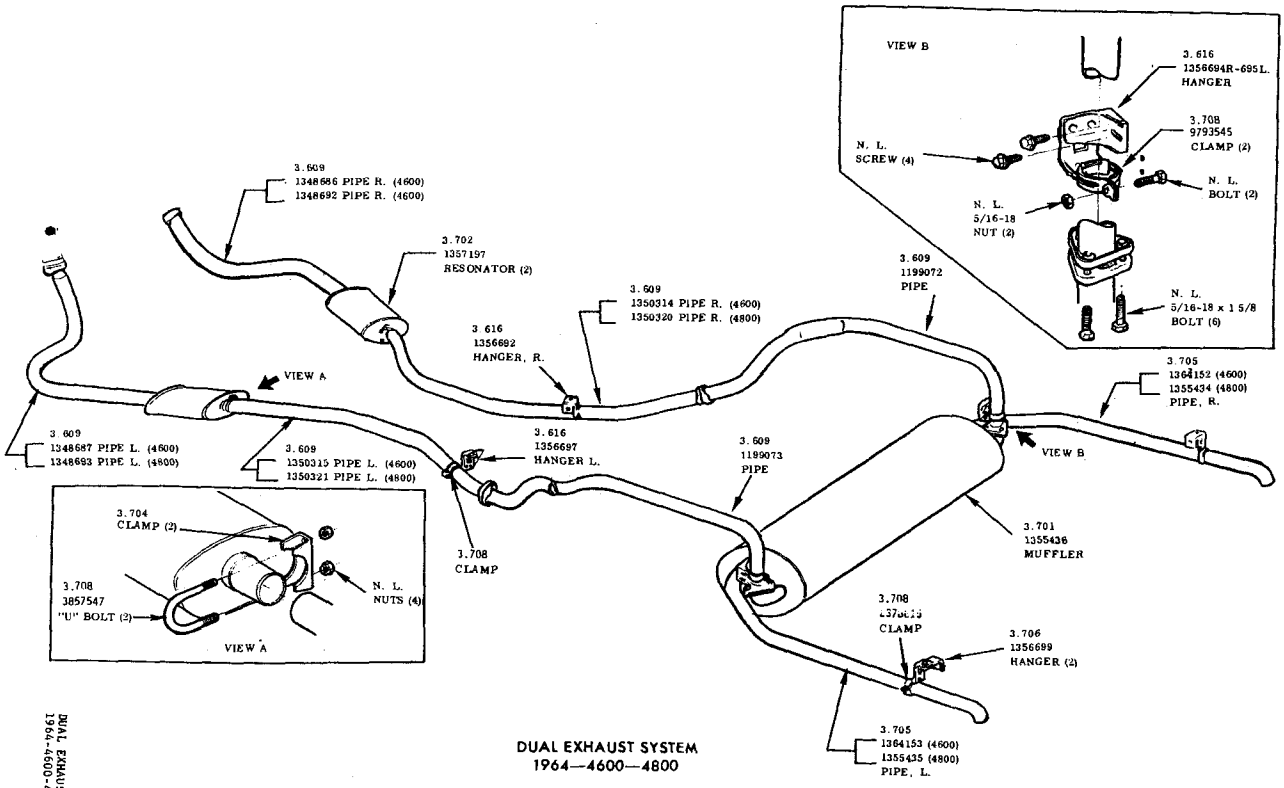

DUAL EXHAUST SYSTEM
1964—4600—4800

DUAL EXHAUST
1964-4600-4800

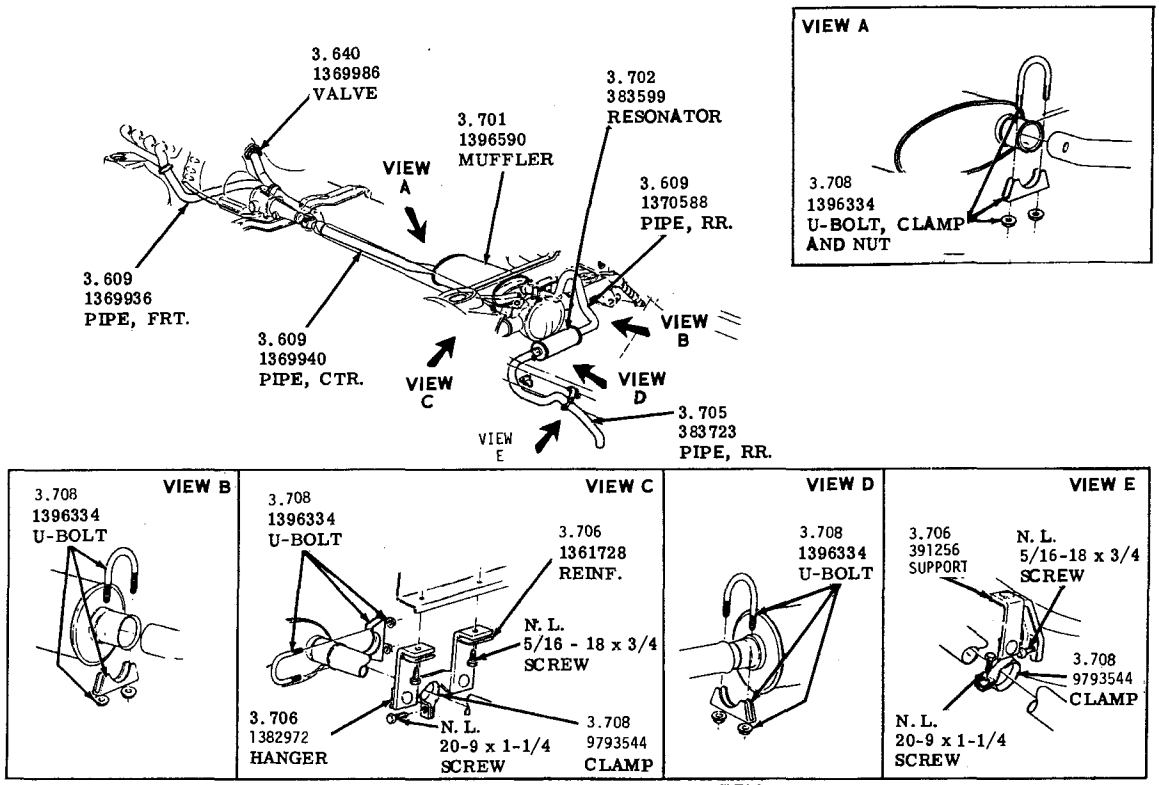

SINGLE EXHAUST SYSTEM
1965 SPORT WAGONS

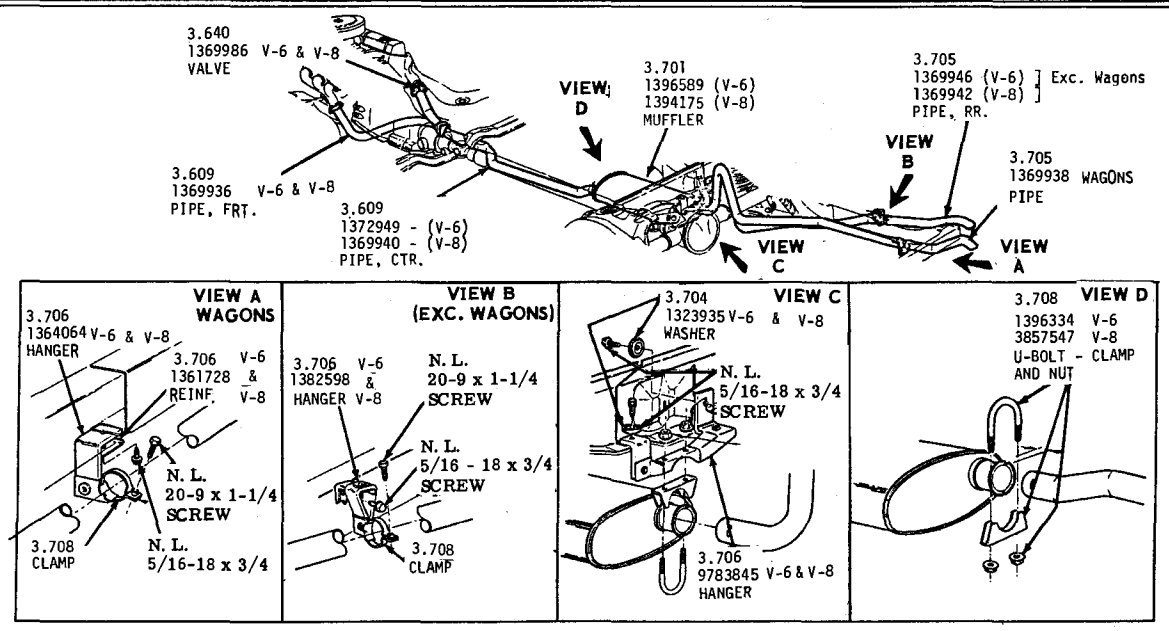

SINGLE EXHAUST SYSTEM
1965 - SPECIAL - SKYLARK

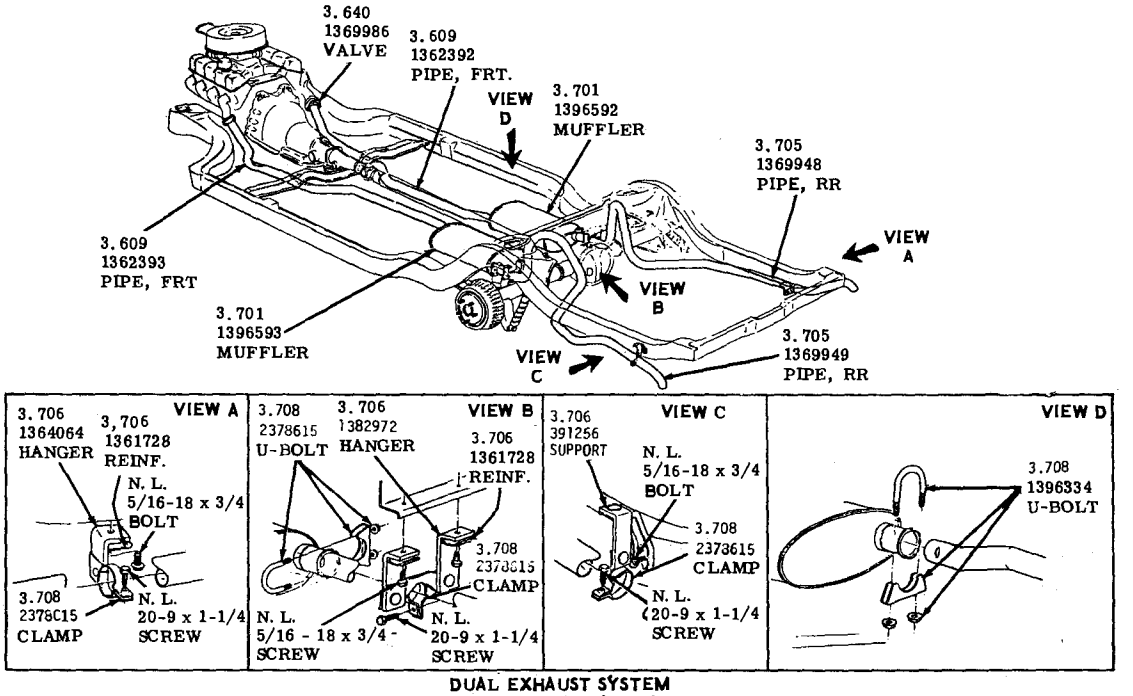

DUAL EXHAUST SYSTEM
1965 - SPORT WAGONS

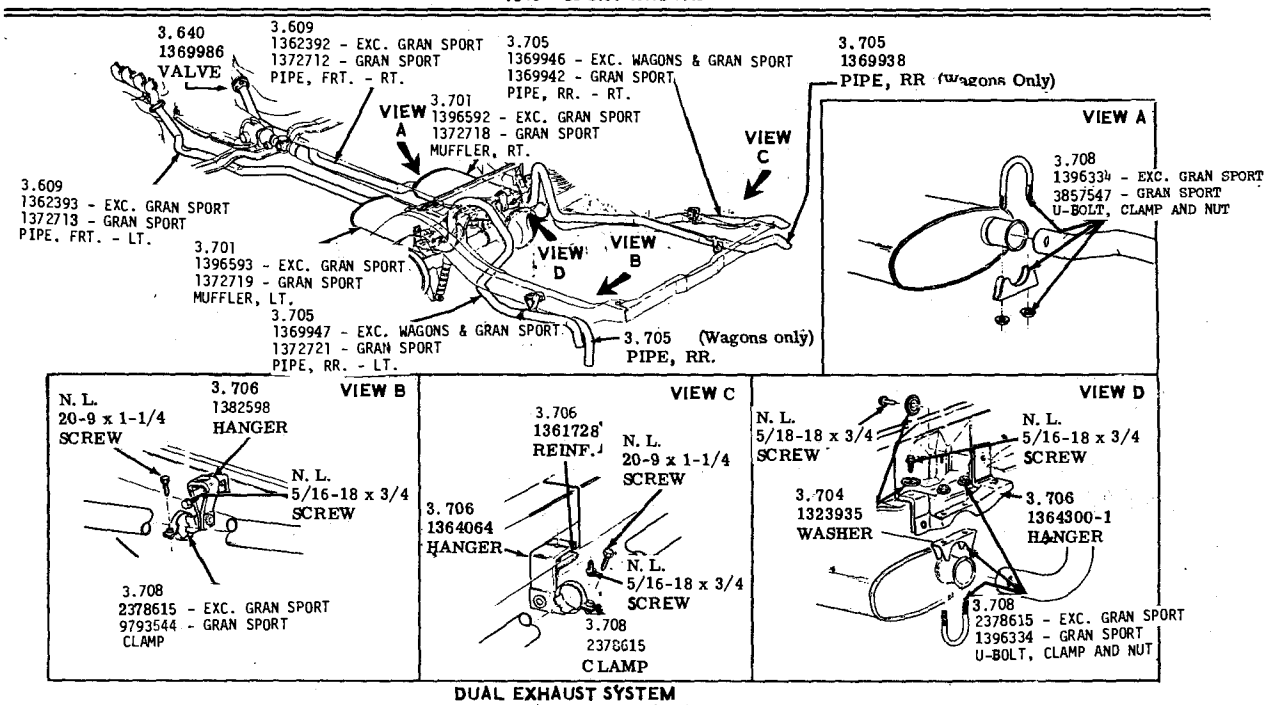

DUAL EXHAUST SYSTEM
1965 - SPECIAL-SKYLARK - V-8

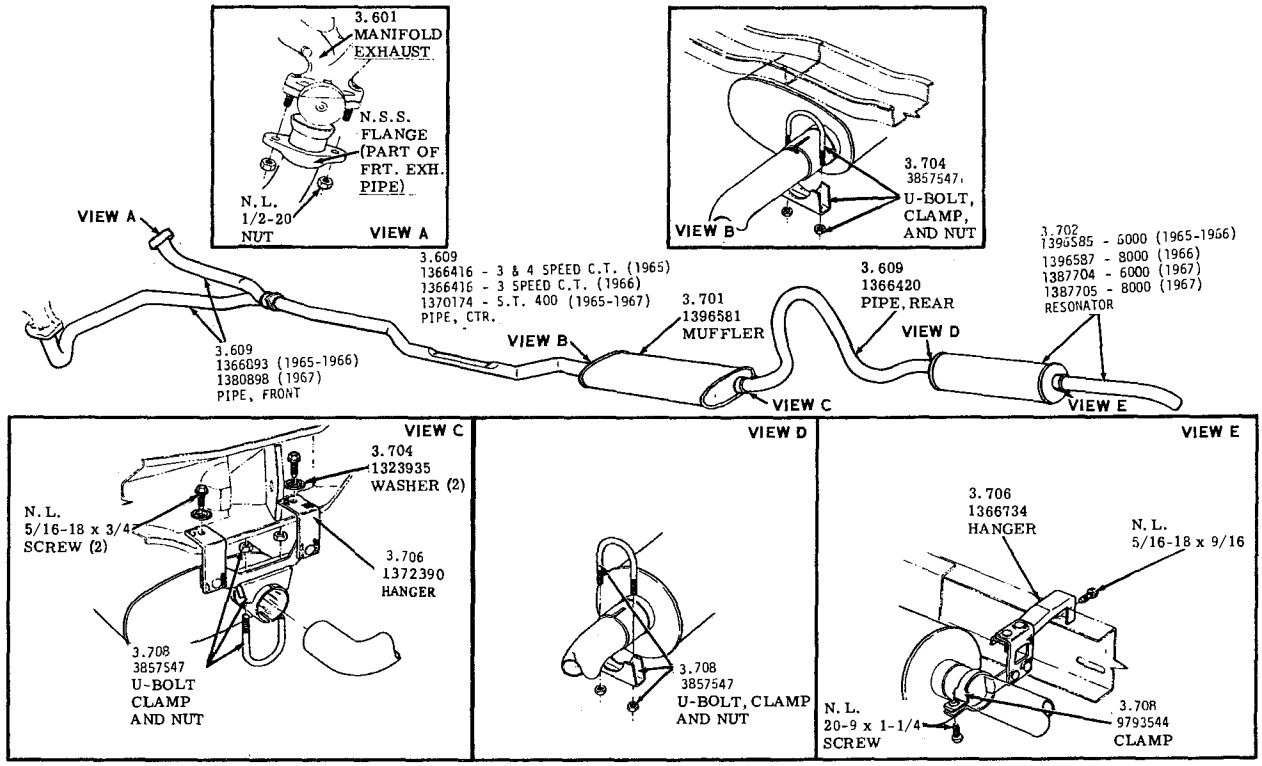

1965-1967 - WILDCAT AND ELECTRA 225
SINGLE EXHAUST SYSTEM

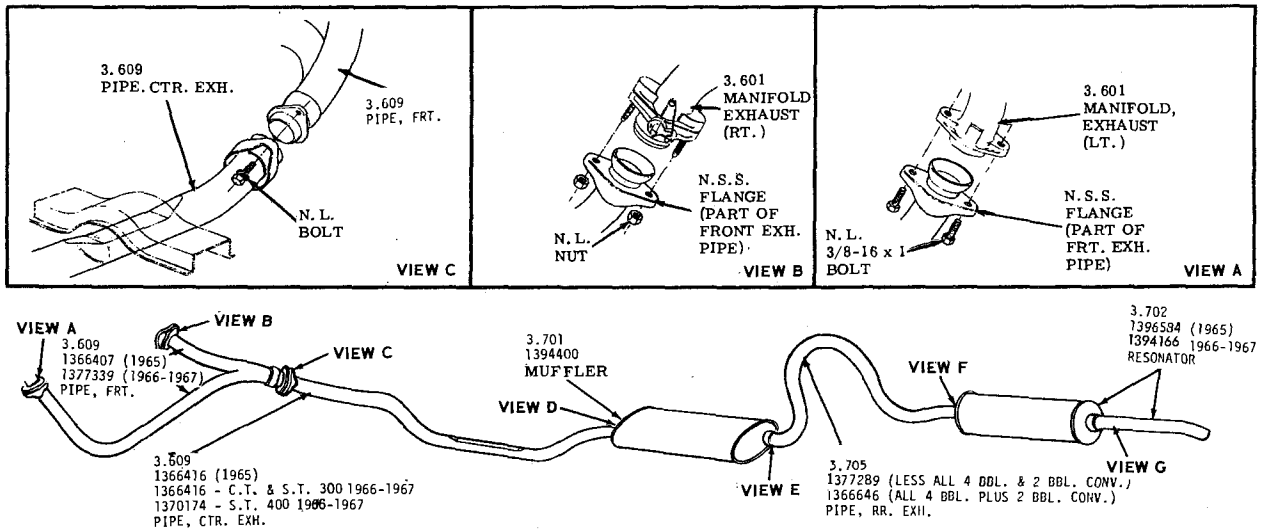

1965-1967 - LE SABRE
SINGLE EXHAUST SYSTEM

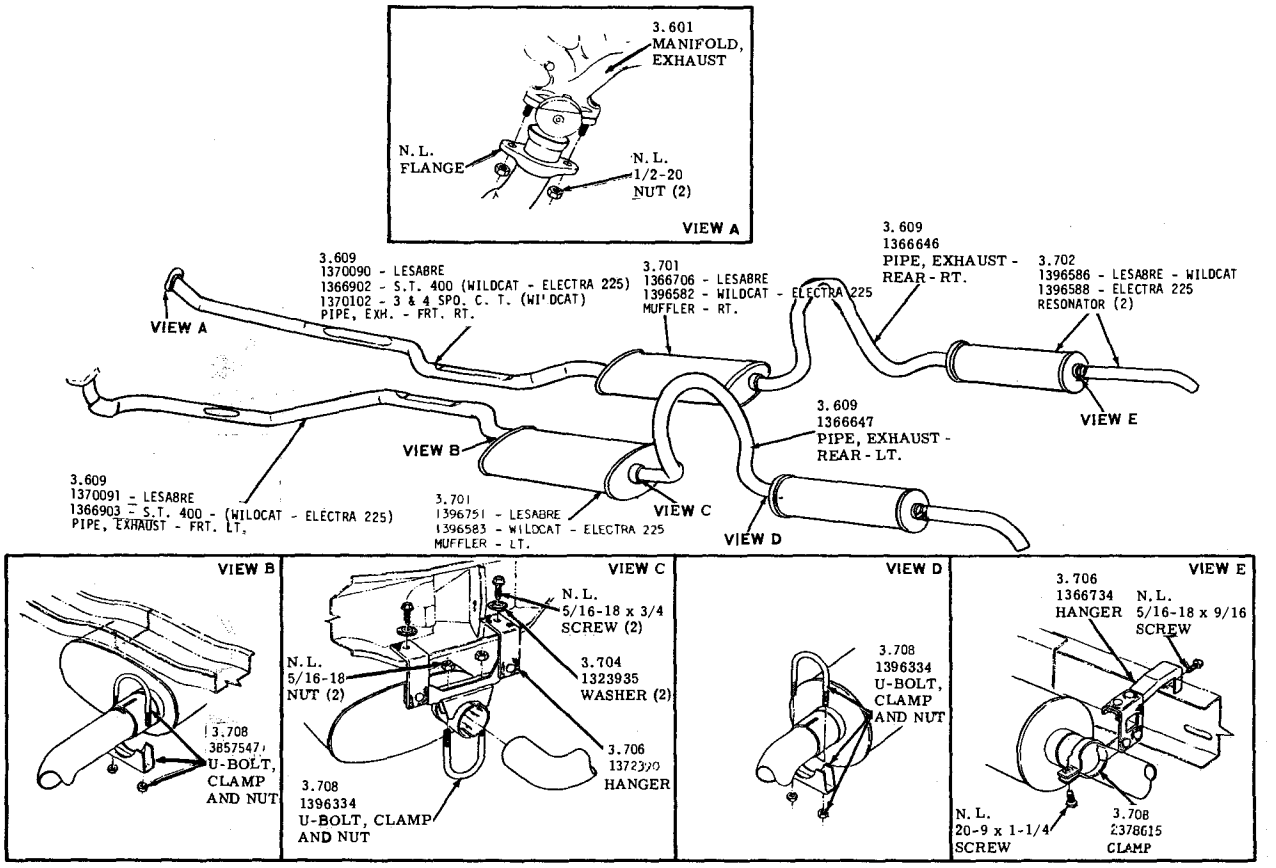

DUAL EXHAUST SYSTEM
1965-LESABRE-WILDCAT-ELECTRA 225

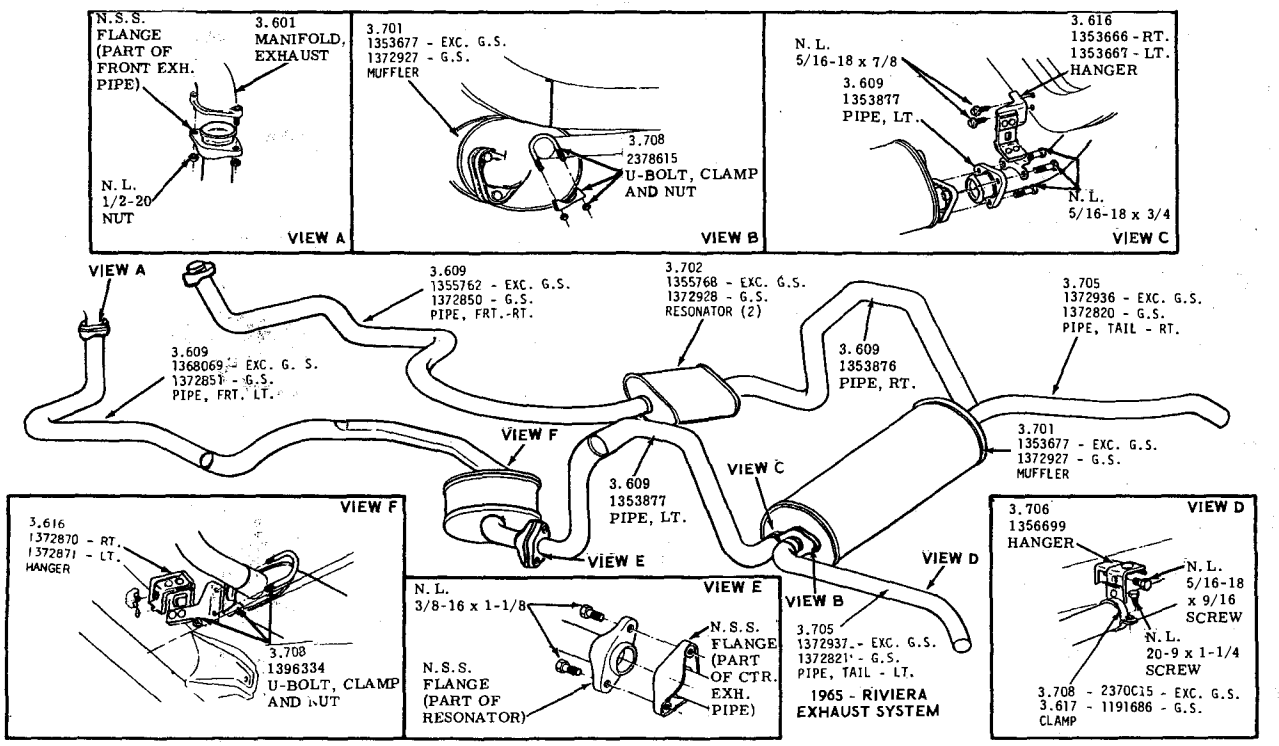

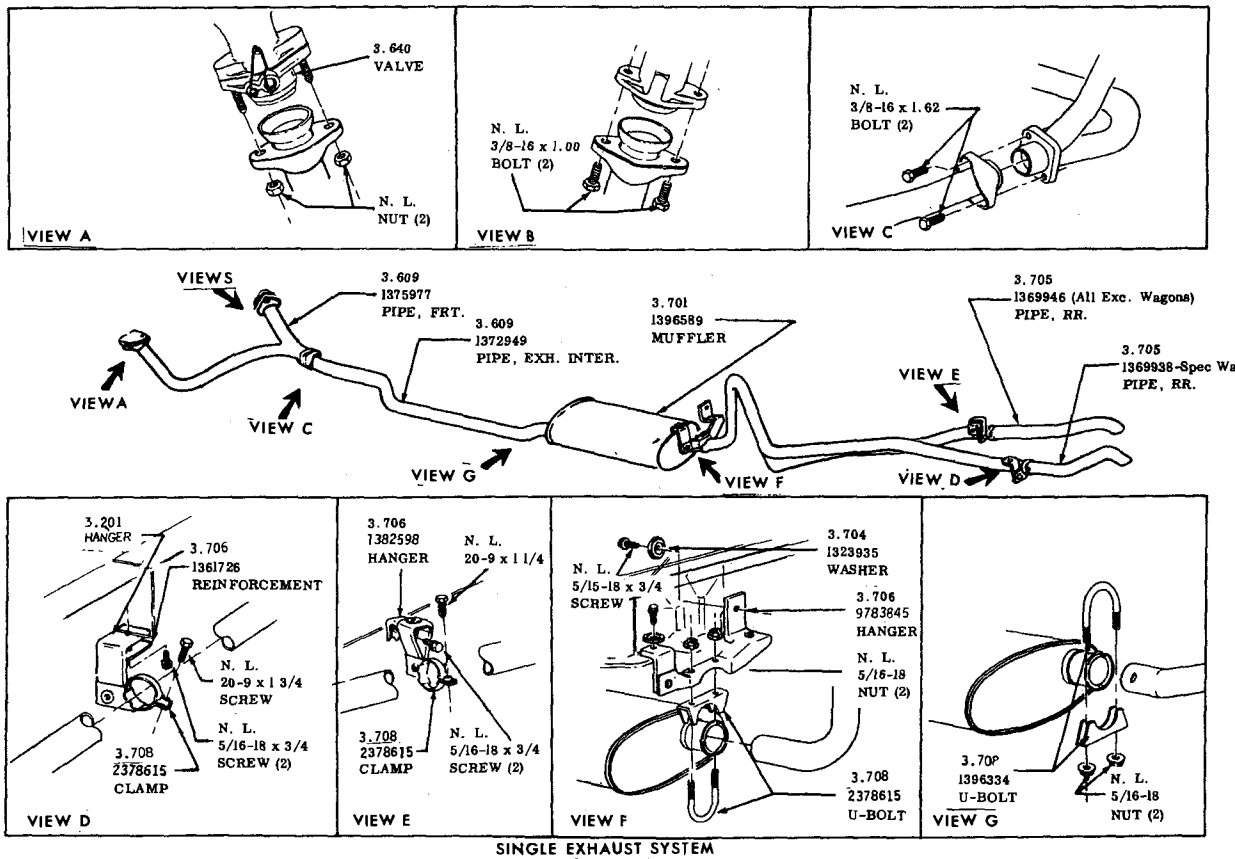

SINGLE EXHAUST SYSTEM
1966-1967 —SPECIAL—SKYLARK (V-6)

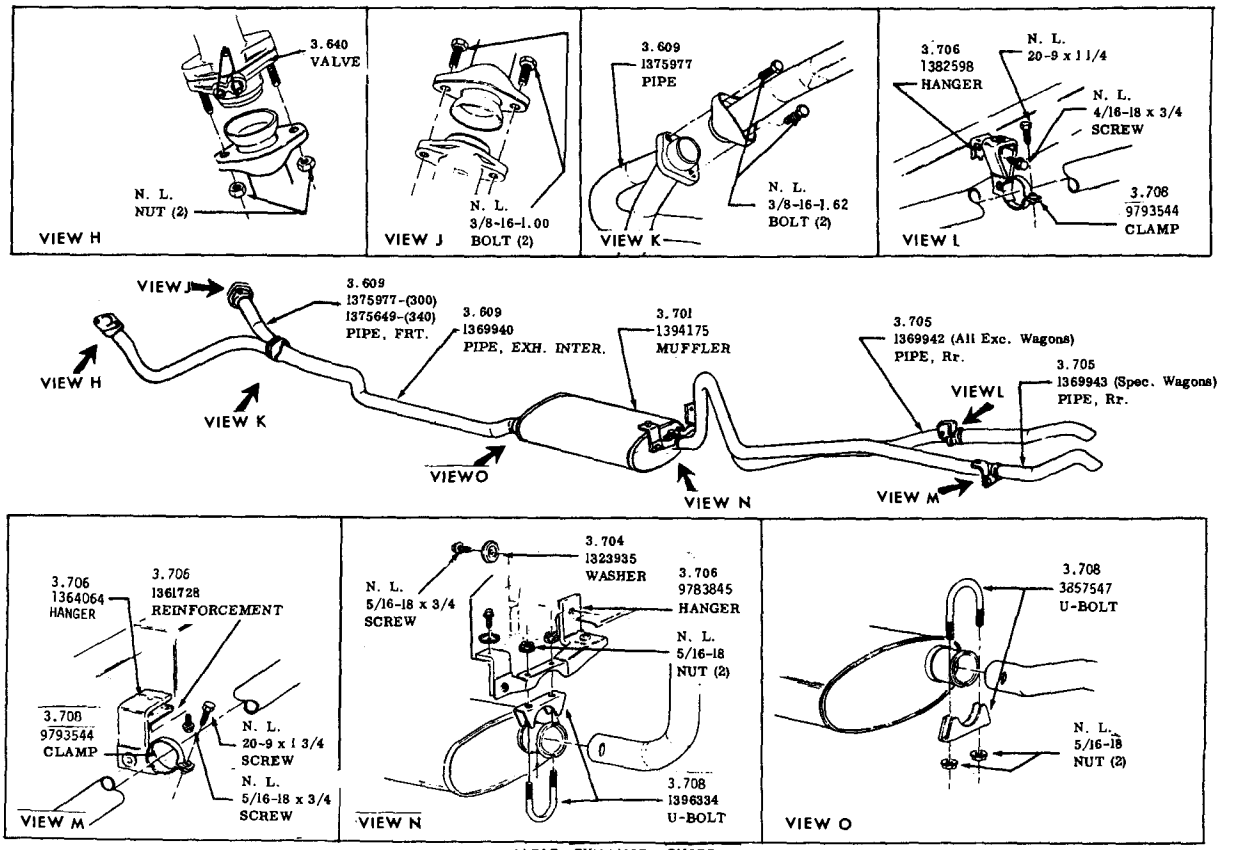

SINGLE EXHAUST SYSTEM
1966-1967 —SPECIAL—SKYLARK (V-8)

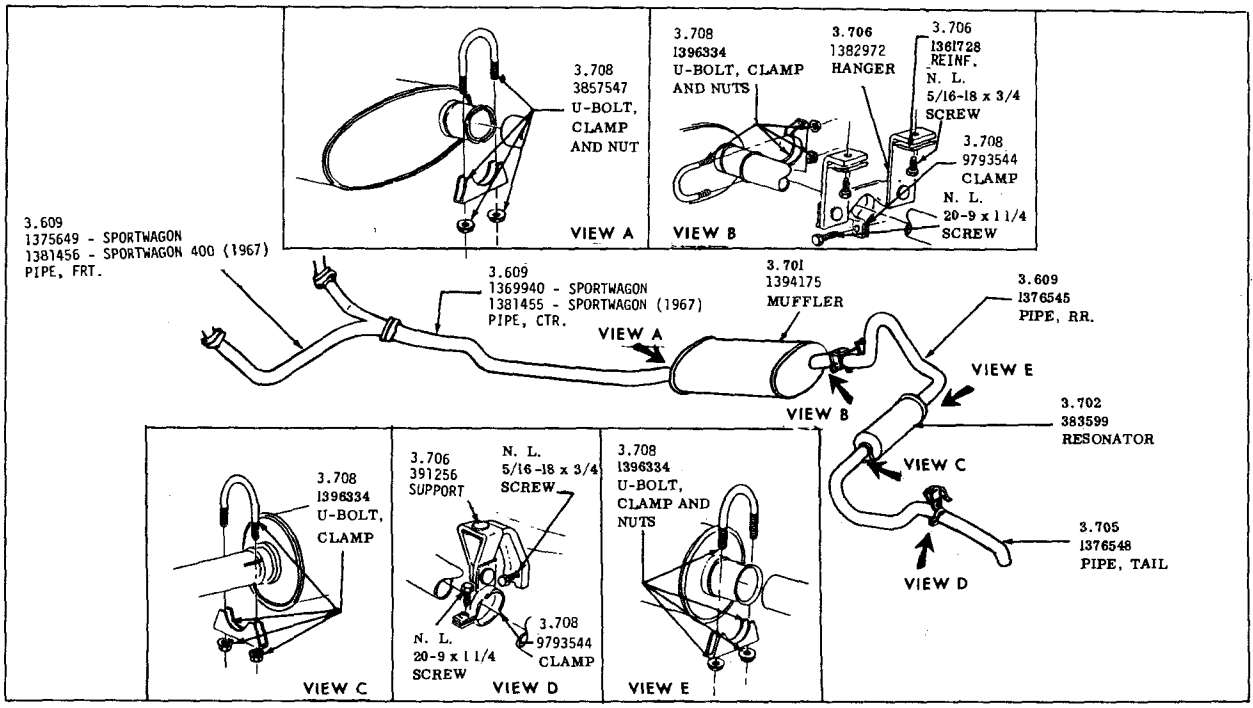

SINGLE EXHAUST SYSTEM
1966-1967 SPORTWAGONS

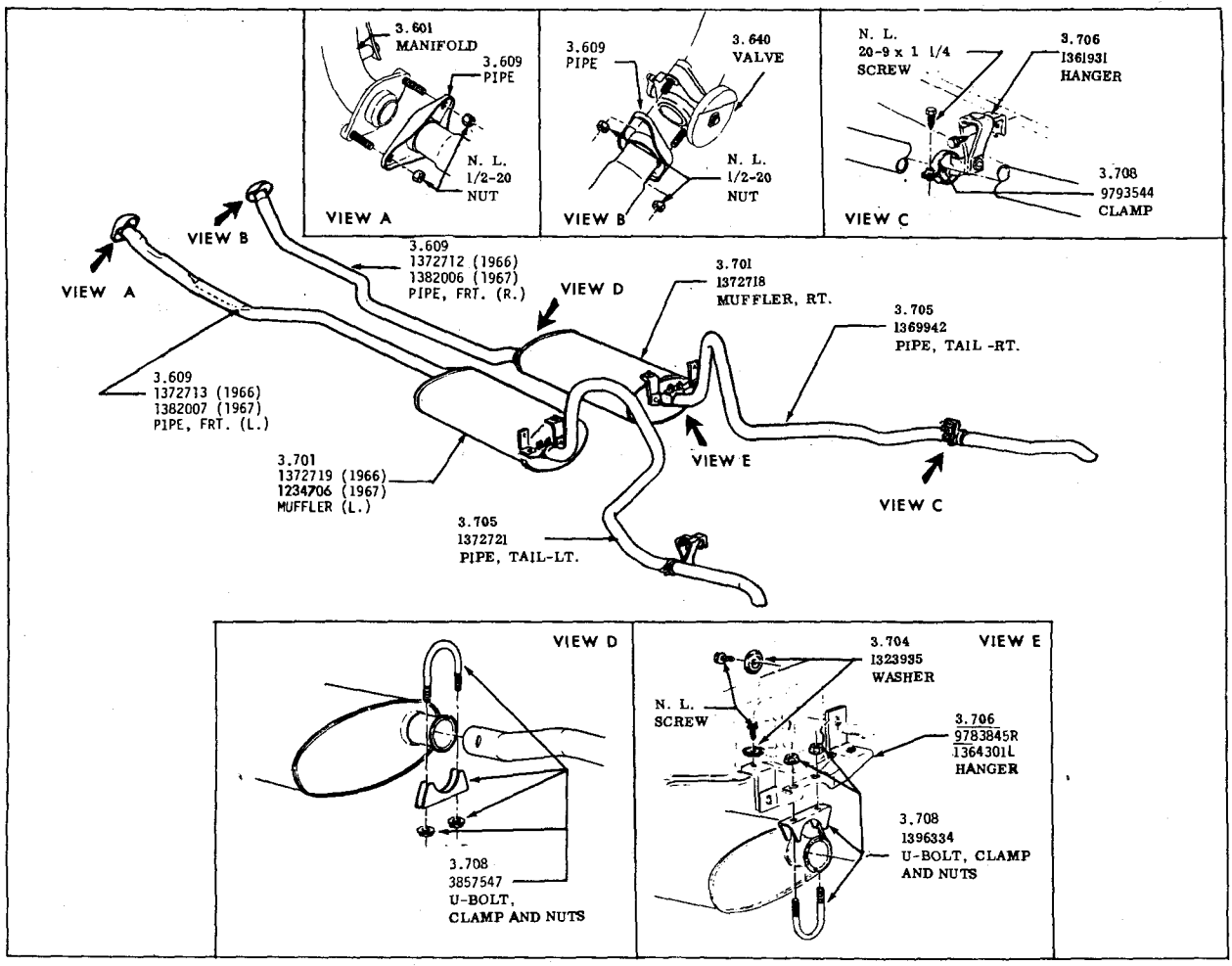

DUAL EXHAUST SYSTE/
1966-1967 —SKYLARK GRAN SPORT

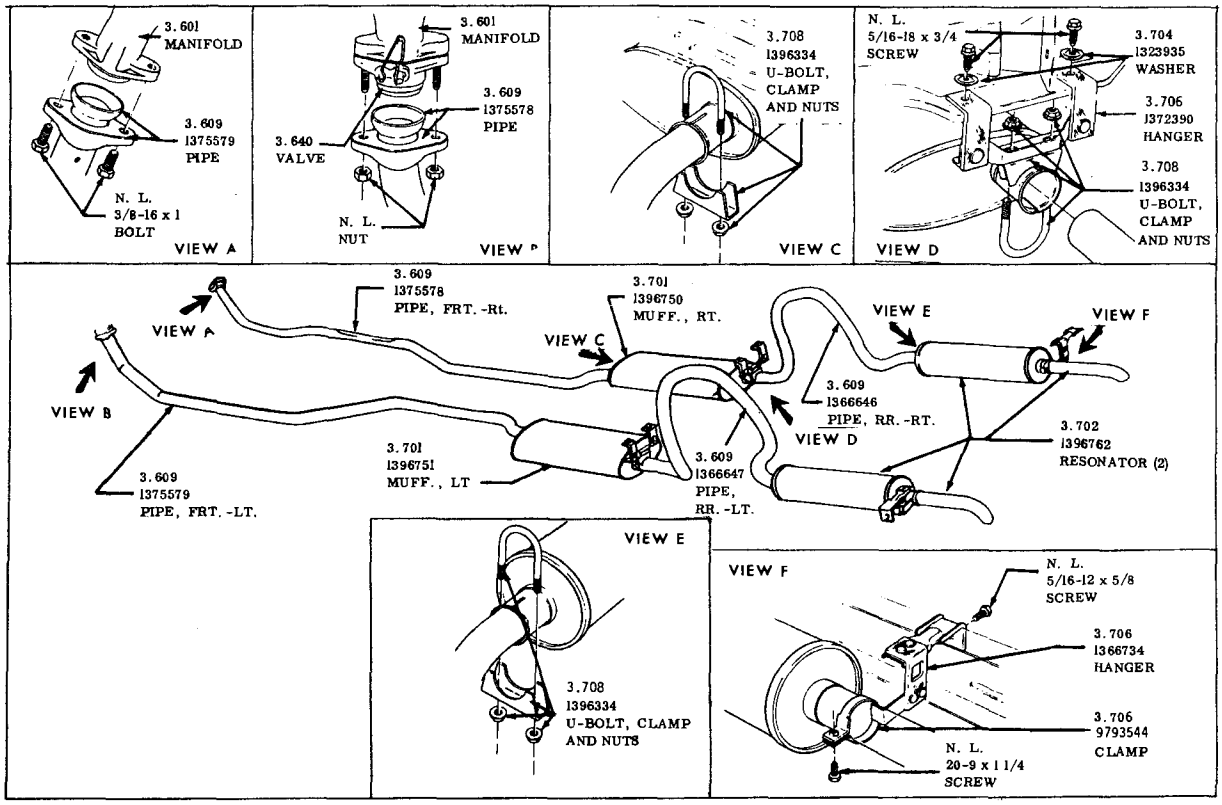

DUAL EXHAUST SYSTEM
1966 — LESABRE

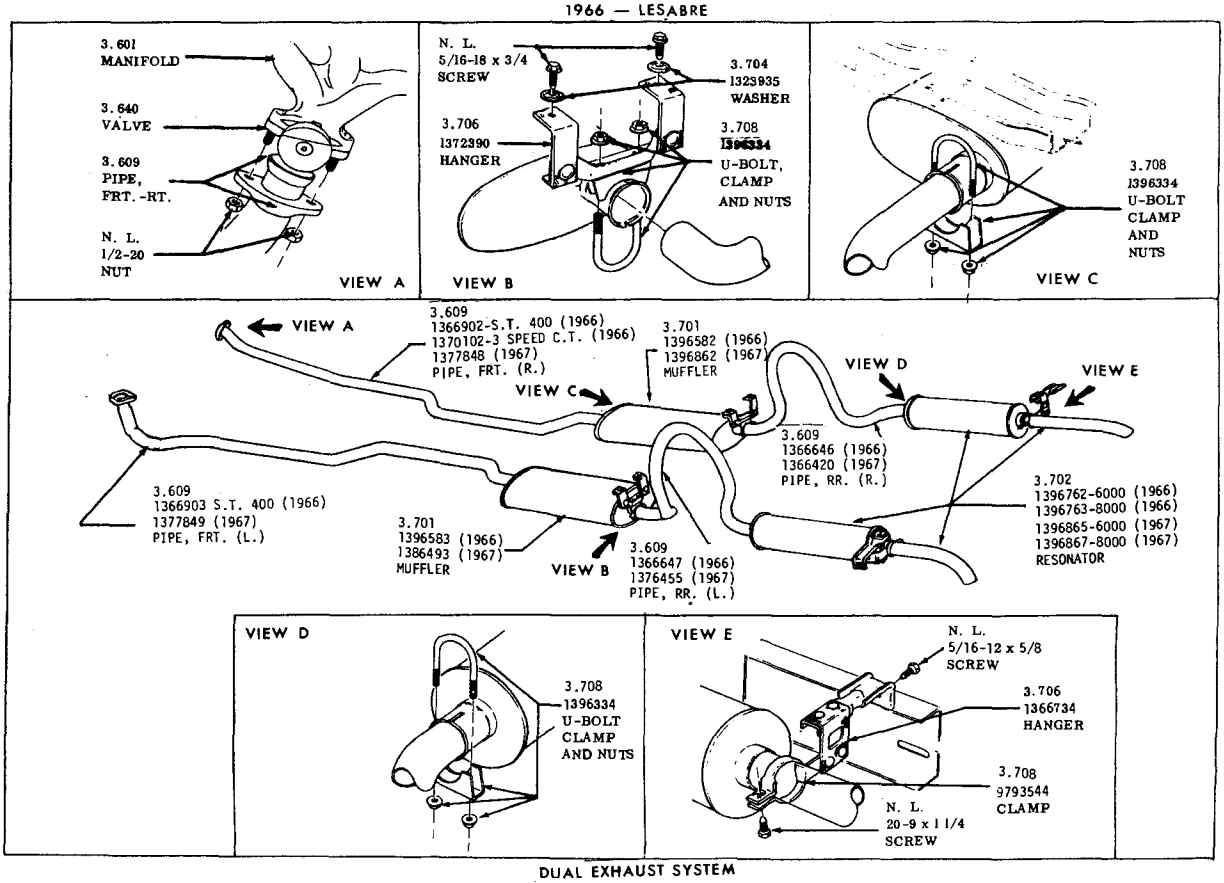

DUAL EXHAUST SYSTEM
1966-1967-WILDCAT-ELECTRA 225

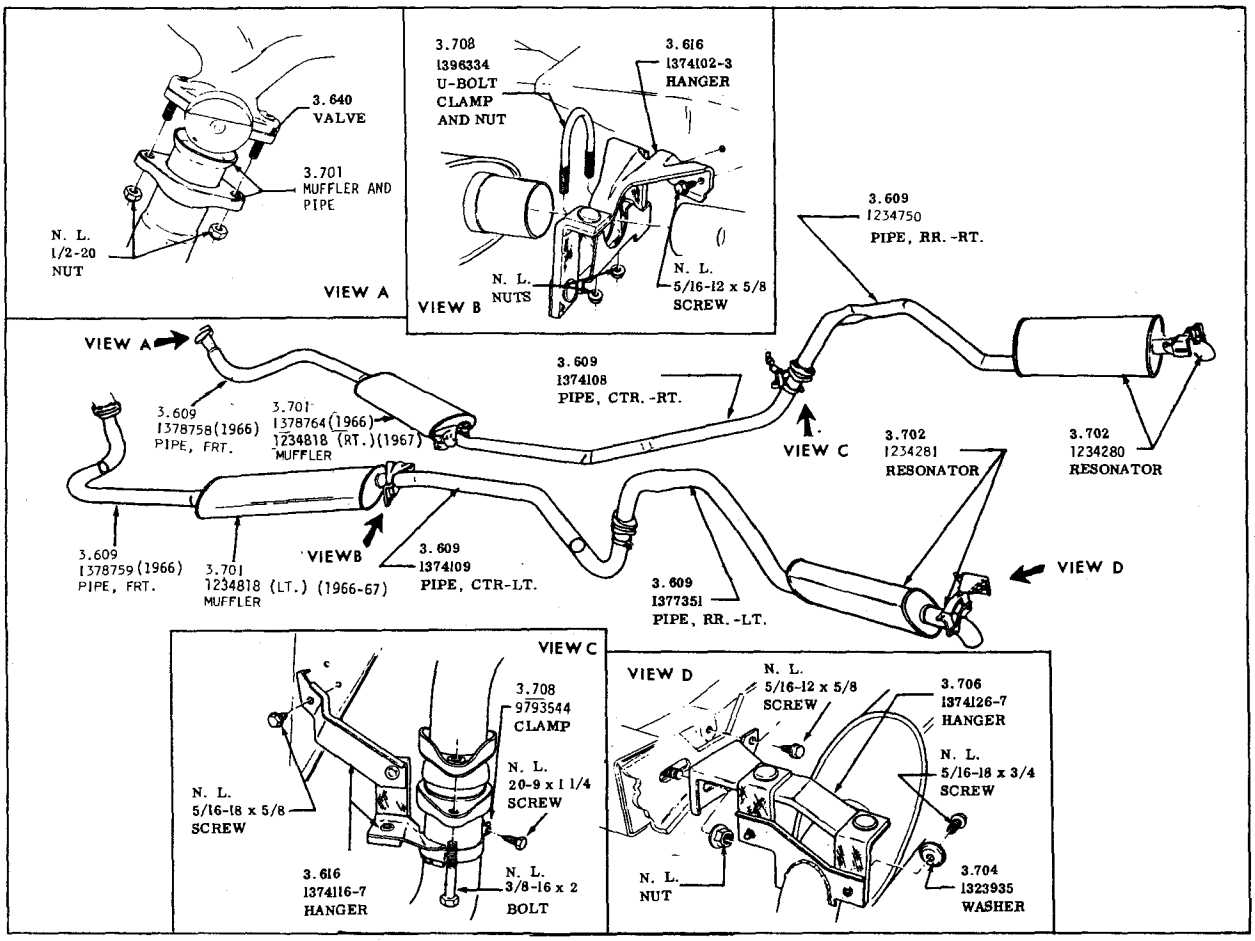

DUAL EXHAUST SYSTEM
1966-1967-RIVIERA

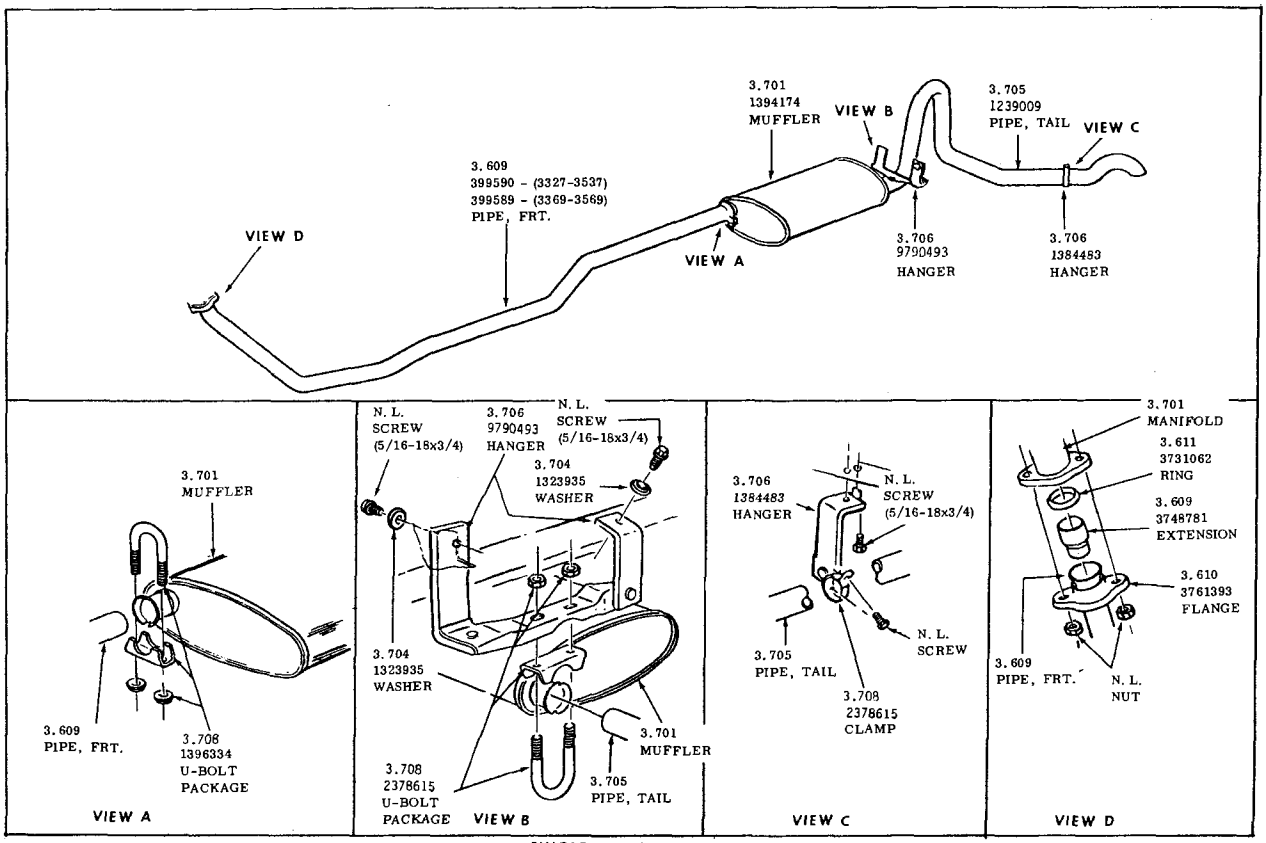

SINGLE EXHAUST SYSTEM
1968 - (250 ENG.) L6

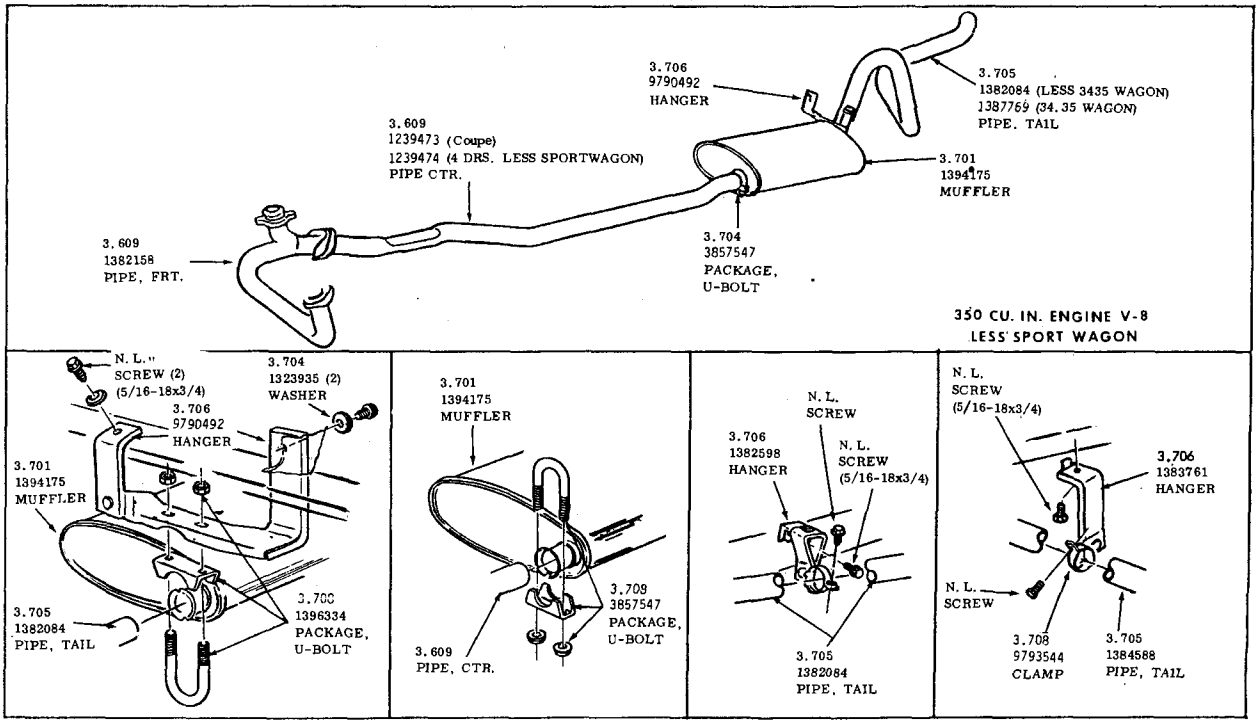

SINGLE EXHUST SYSTEM
1968 - 350 ENG.
30-4000

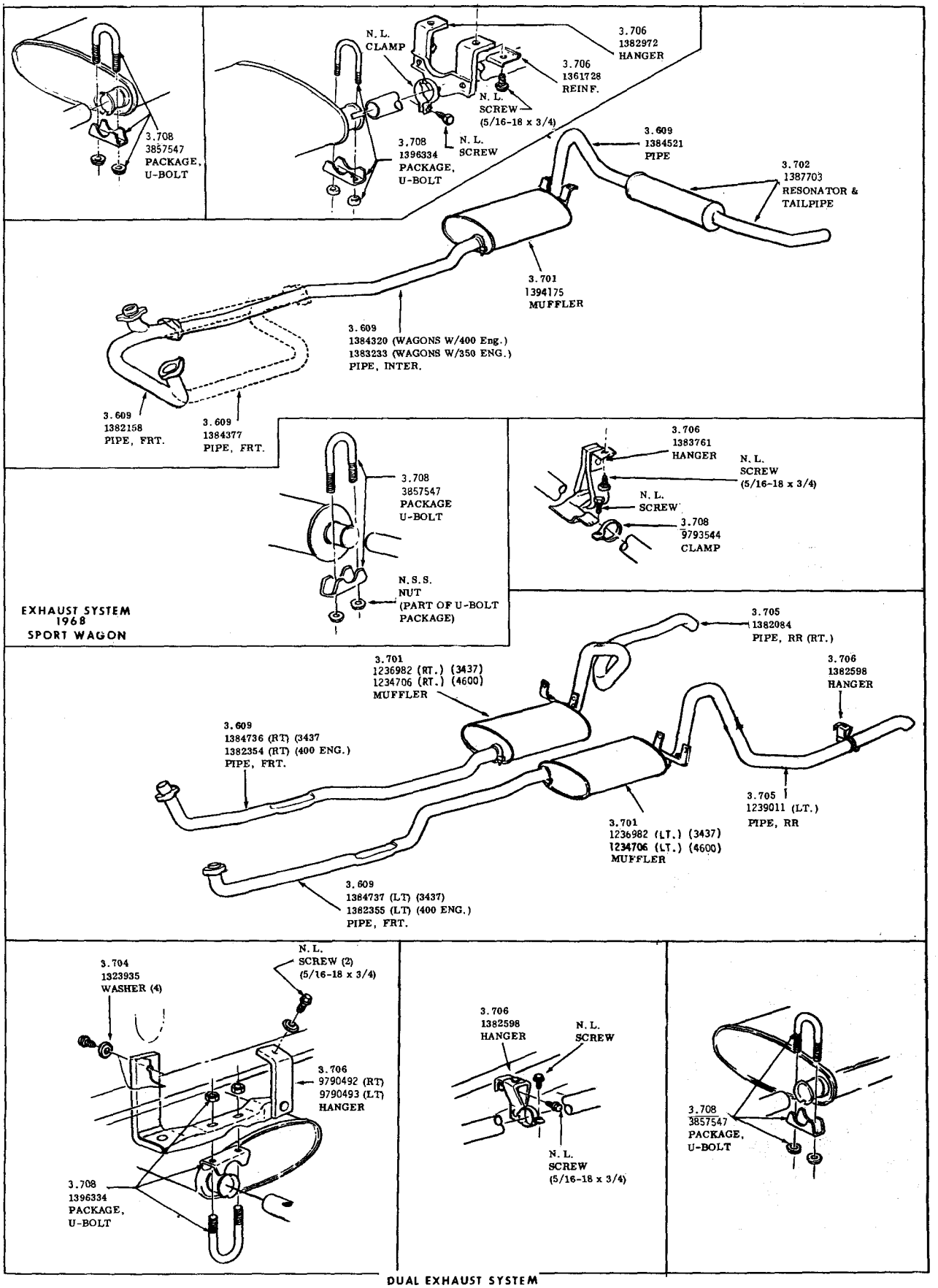

DUAL EXHAUST SYSTEM
1968-3437-4600

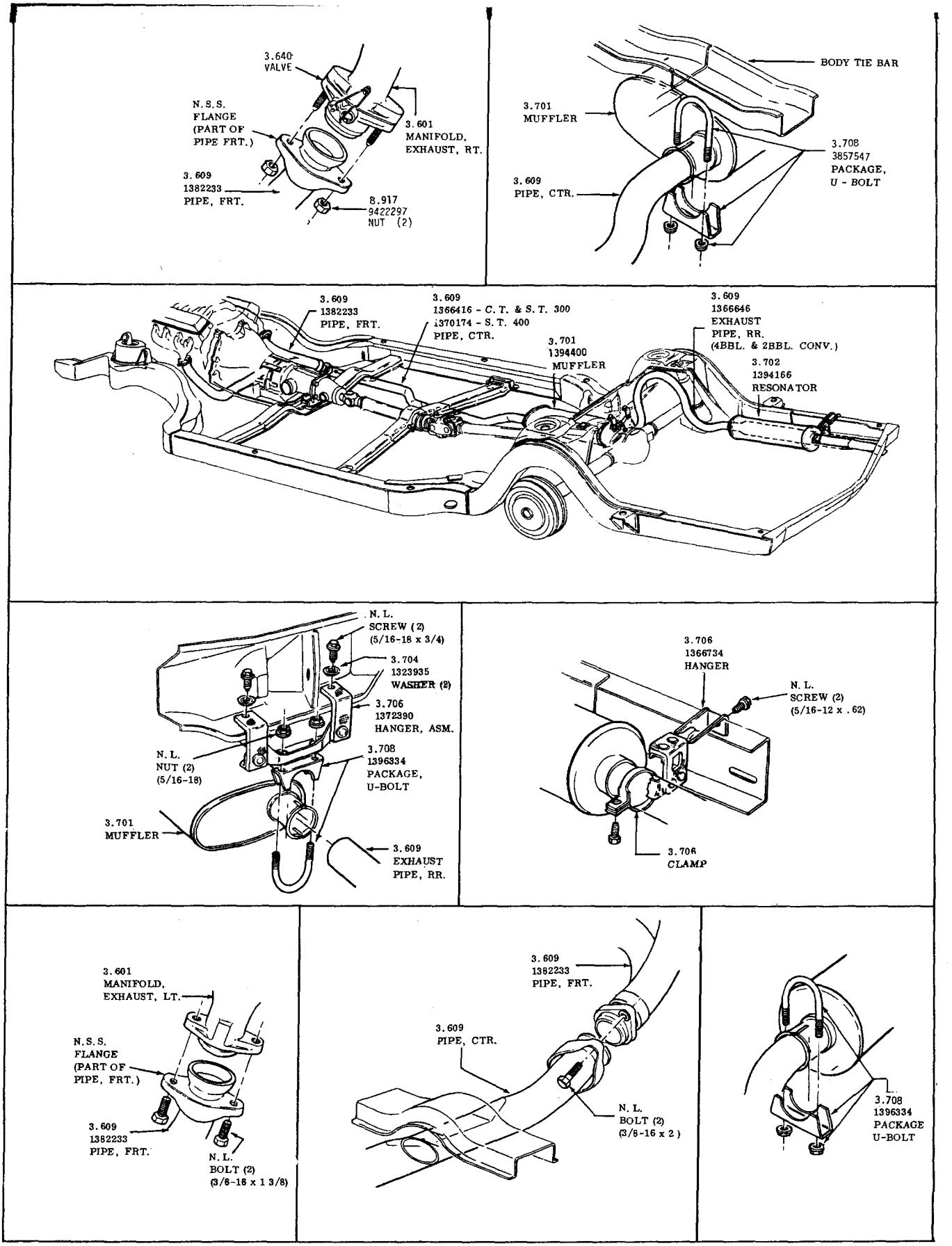

SINGLE EXHAUST SYSTEM
1968 LESABRE

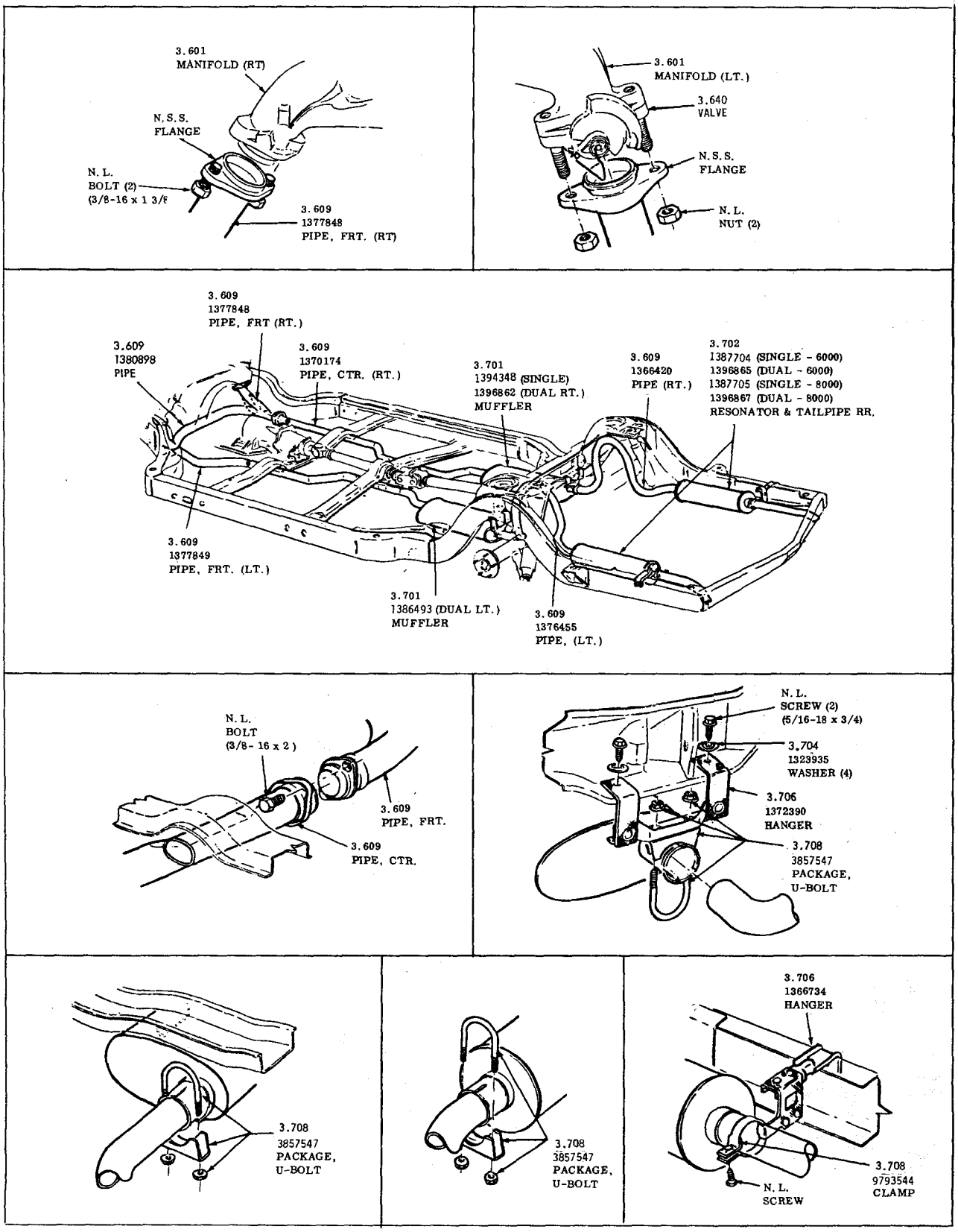

SINGLE & DUAL EXHAUST SYSTEM
1968–6000–8000

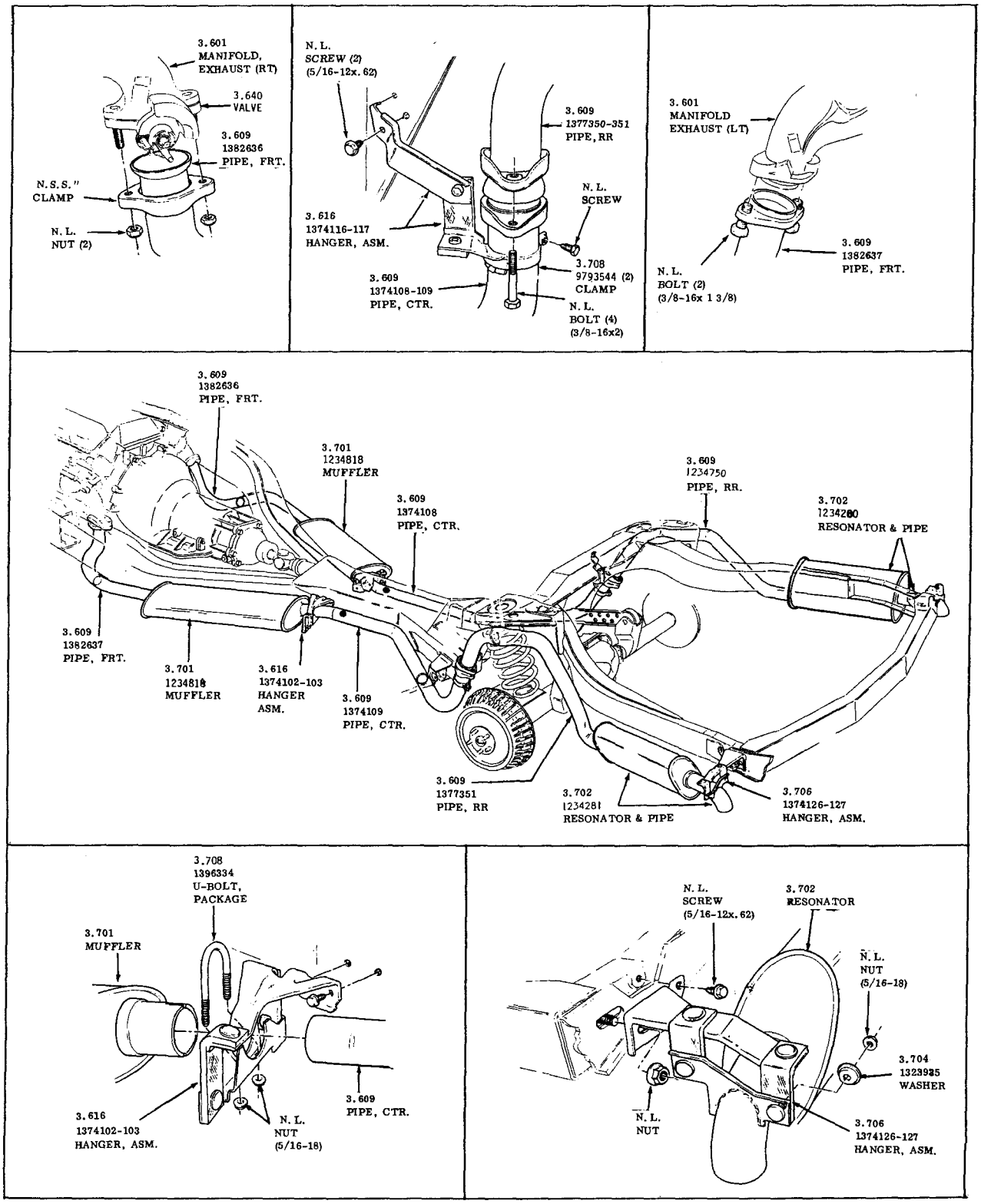

DUAL EXHAUST SYSTEM
1968 -RIVIERA

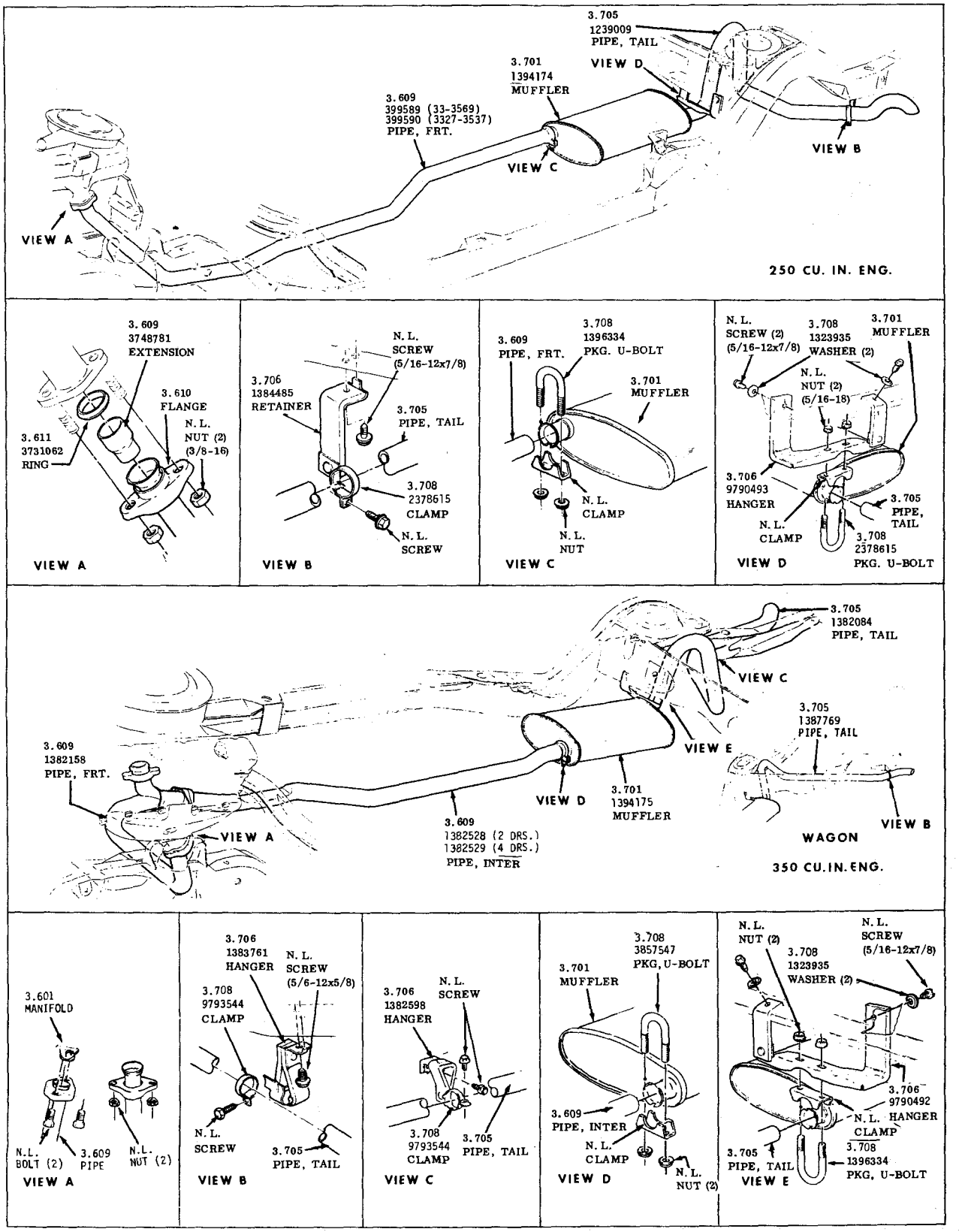

SINGLE EXHAUST SYSTEM
250-350 CU. IN. ENGINE
1969

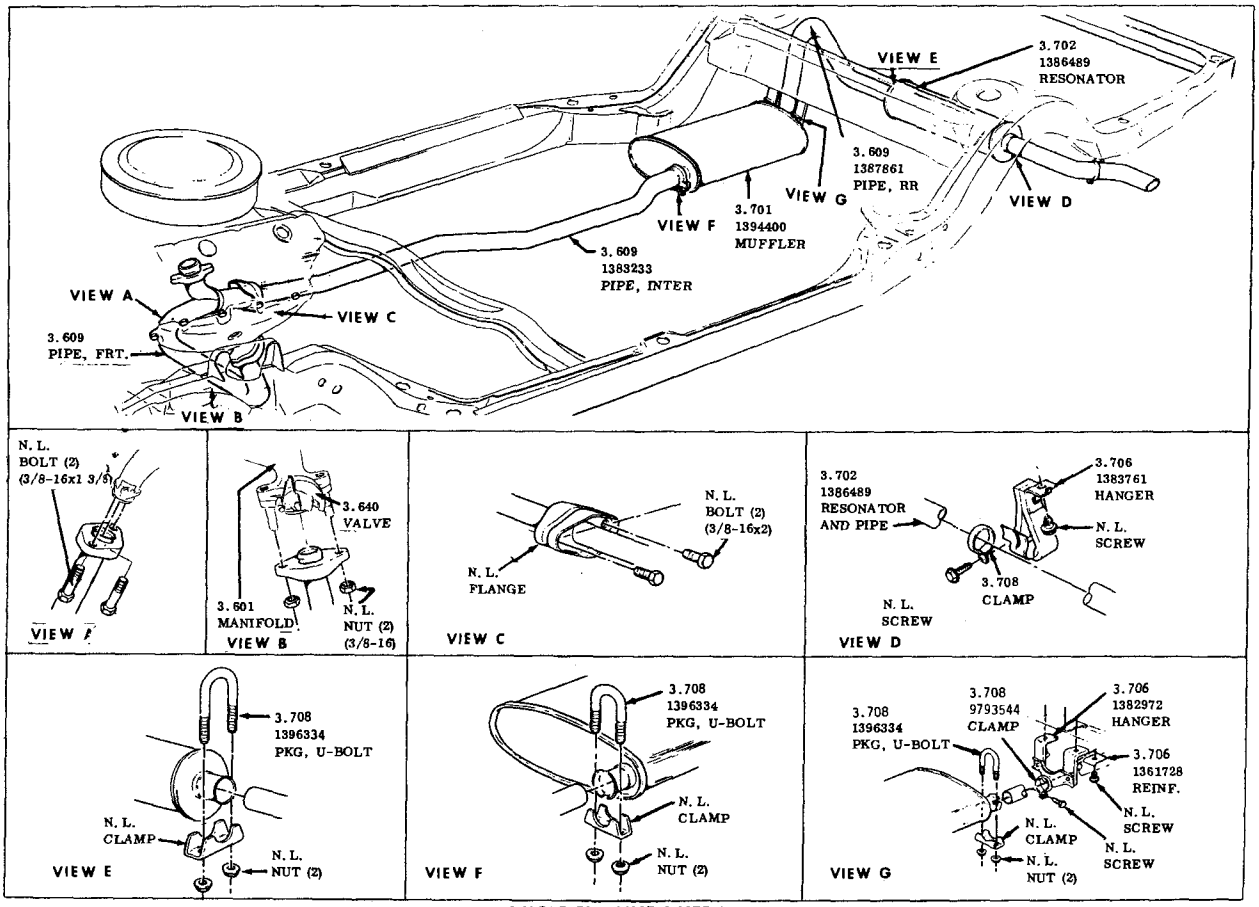

SINGLE EXHAUST SYSTEM
1969 -SPORTWAGON

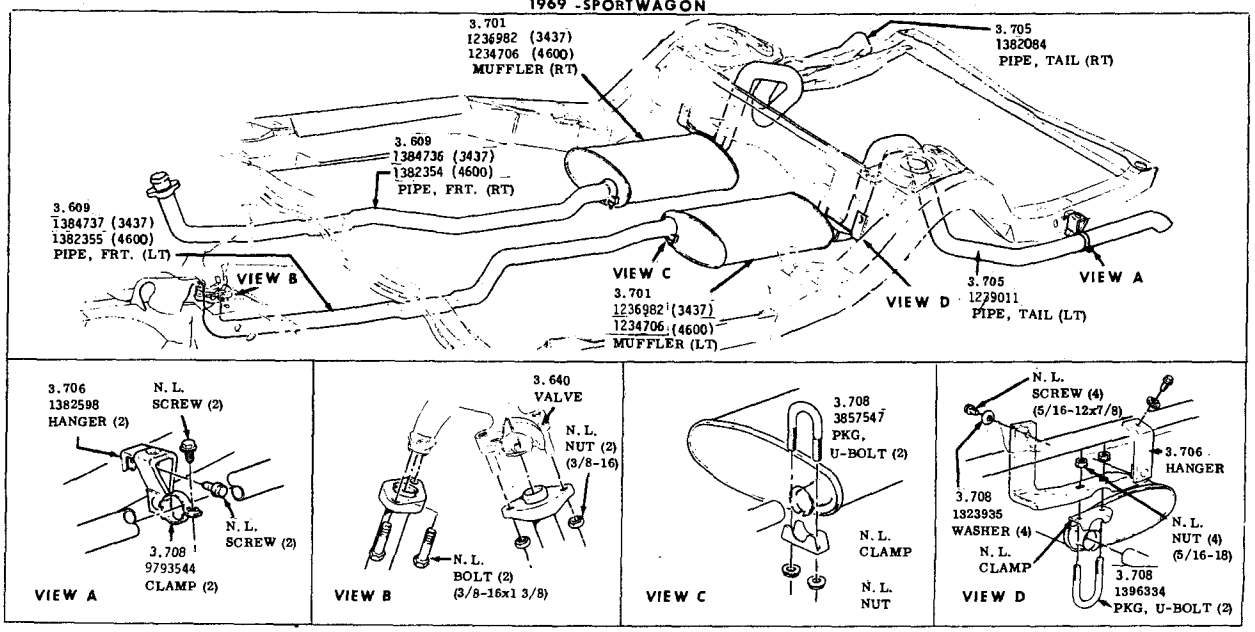

DUAL EXHAUST SYSTEM
350 & 400 CU. IN. ENG.
1969-30-4000

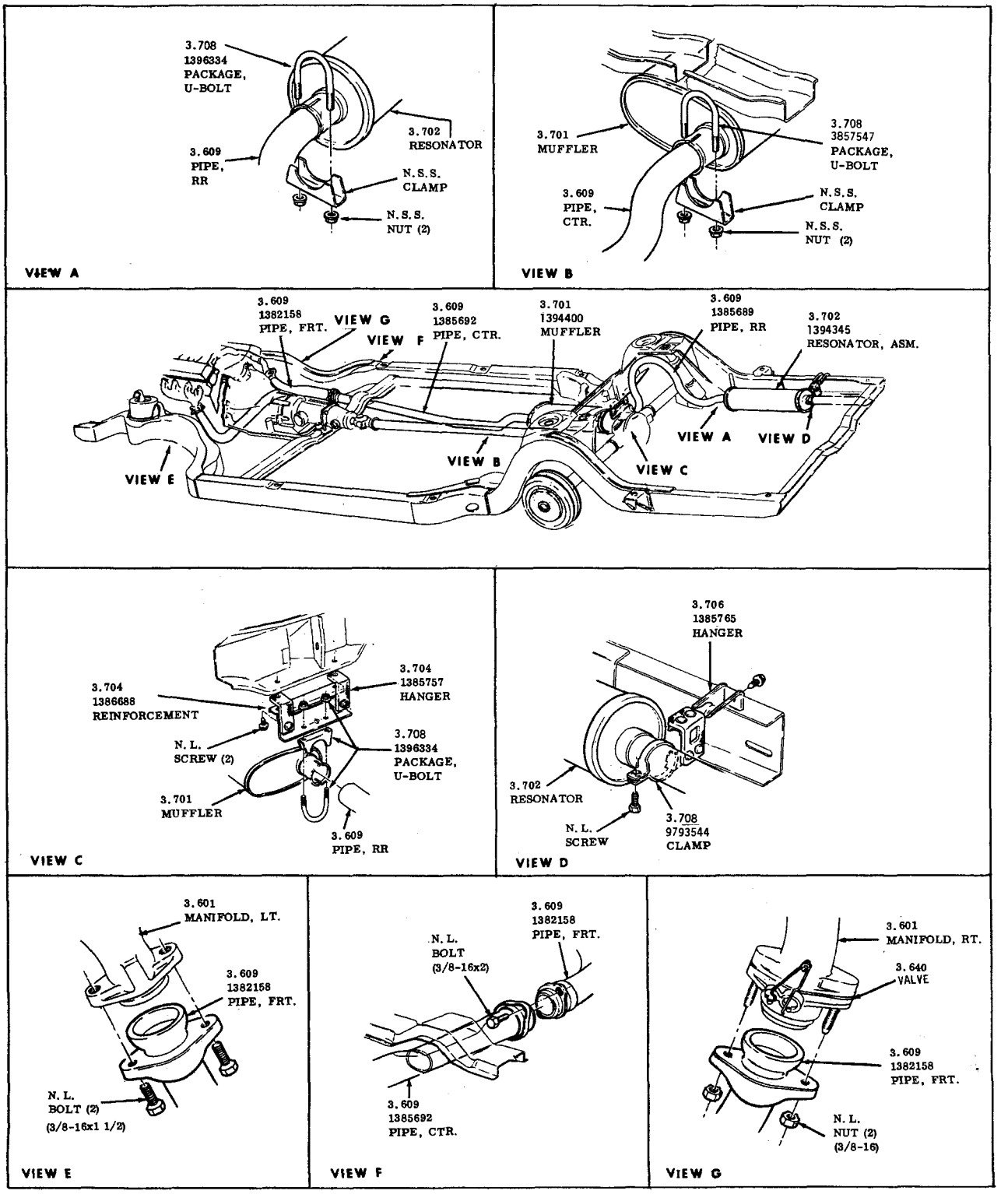

SINGLE EXHAUST SYSTEM
1969-5000

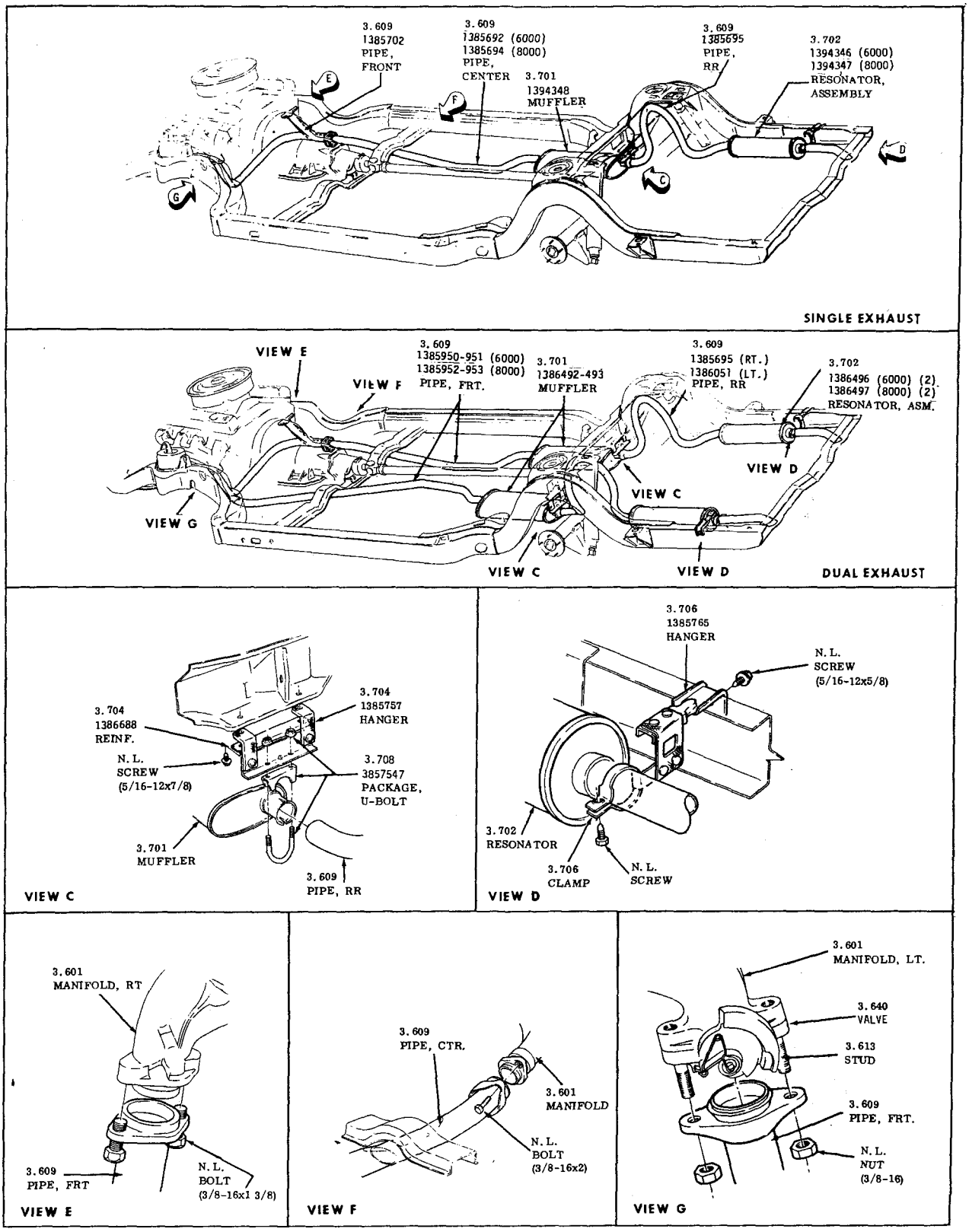

SINGLE & DUAL EXHAUST SYSTEM
1969 - 60-8000

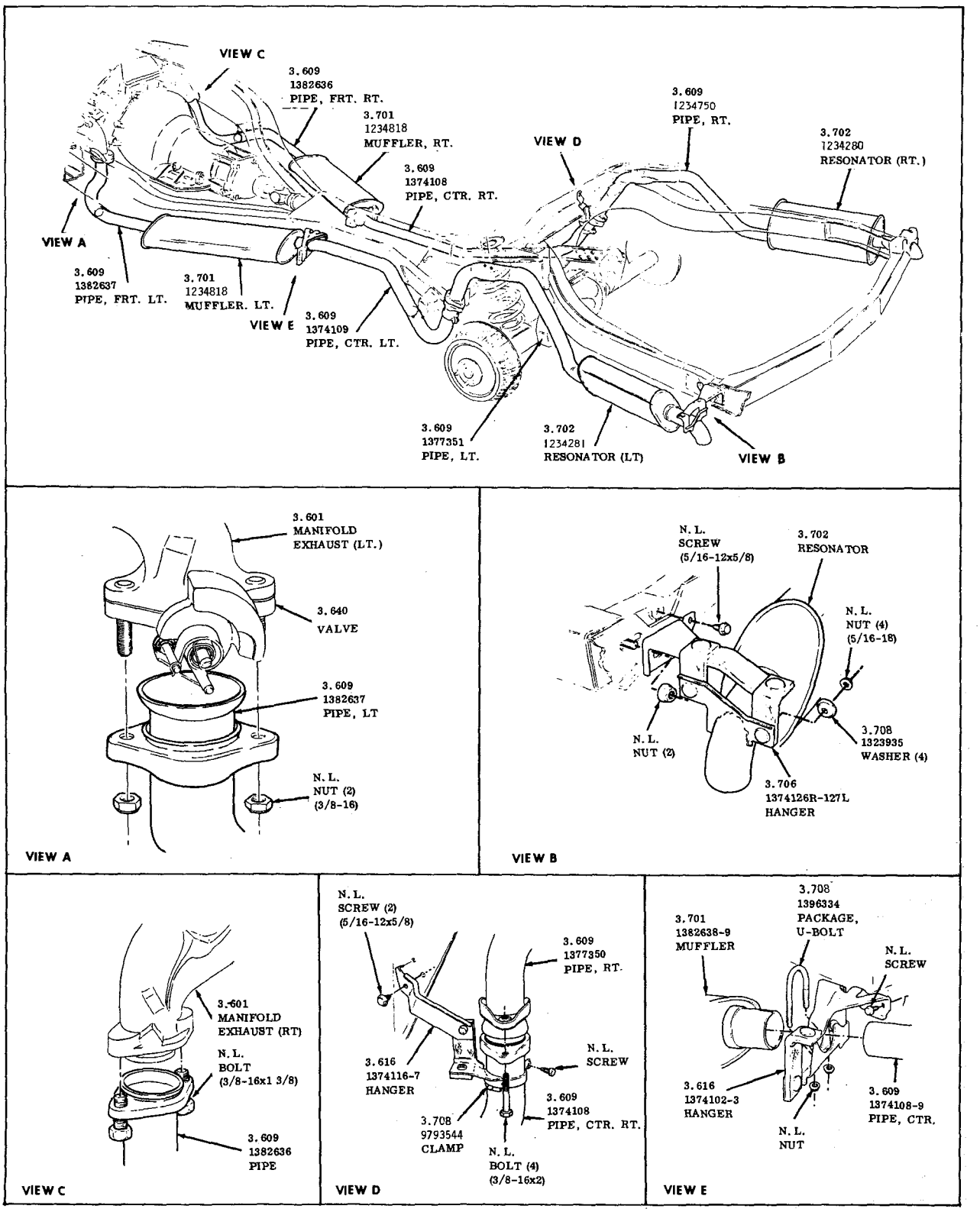

DUAL EXHAUST SYSTEM
1969 RIVIERA

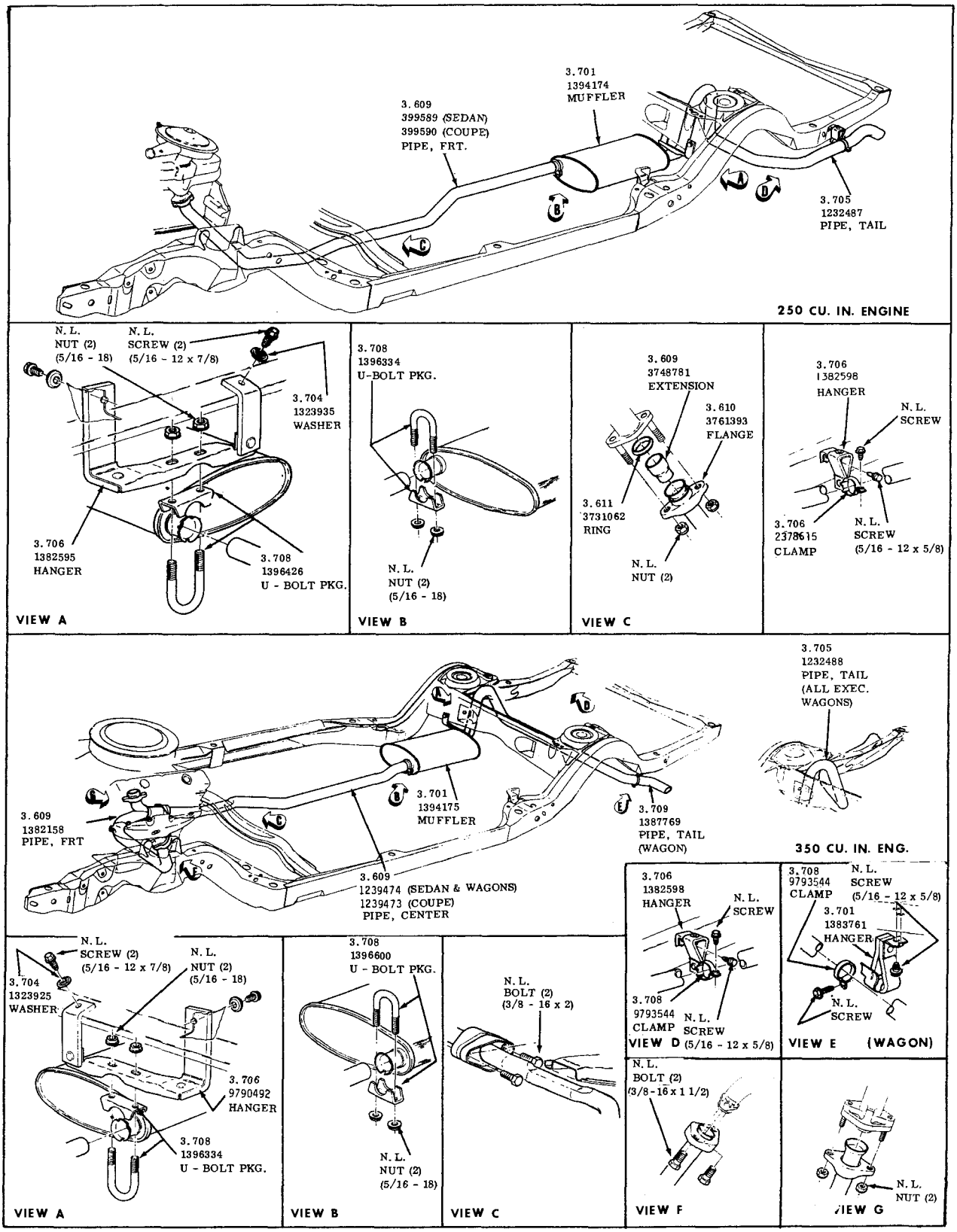

EXHAUST SYSTEM
250-350 CU. IN. ENG. SINGLE
1970-ALL

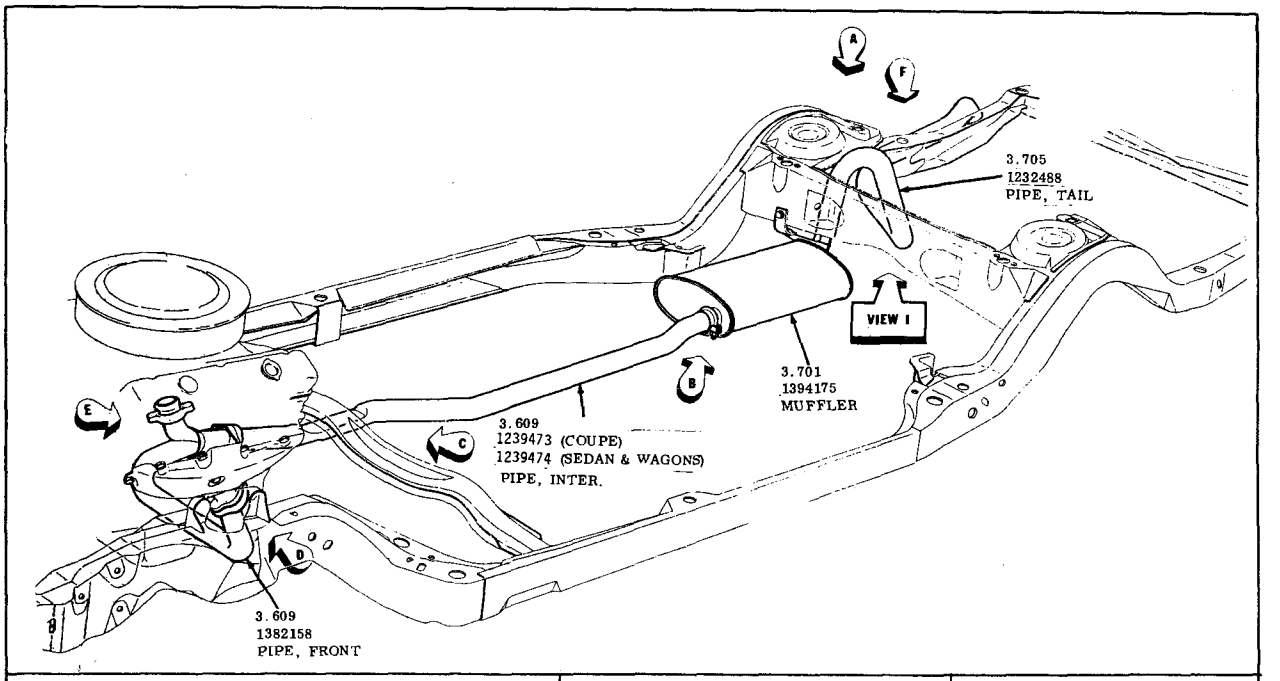

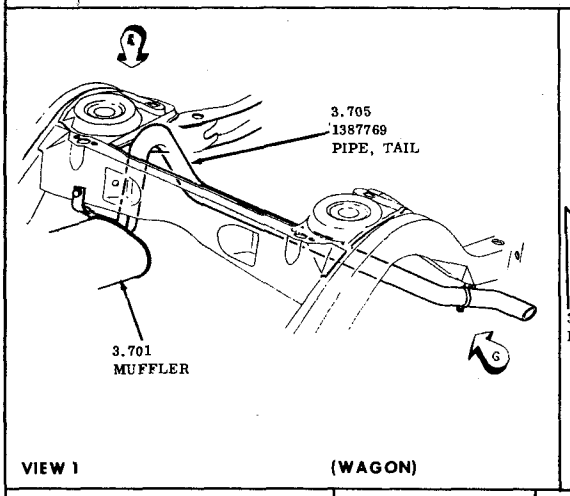

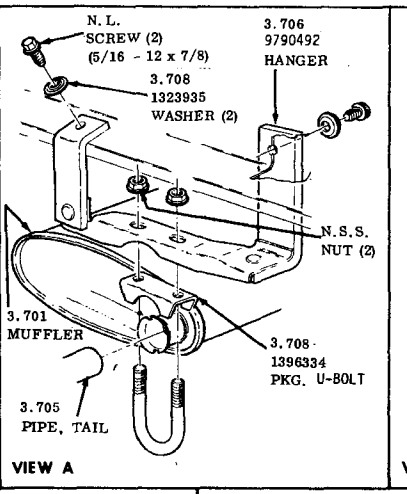

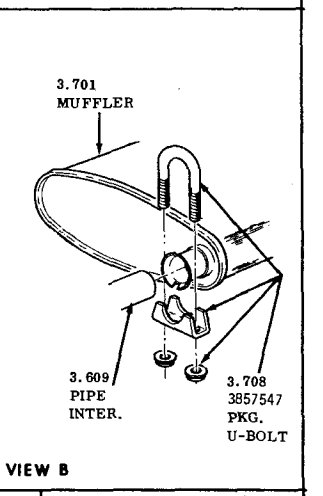

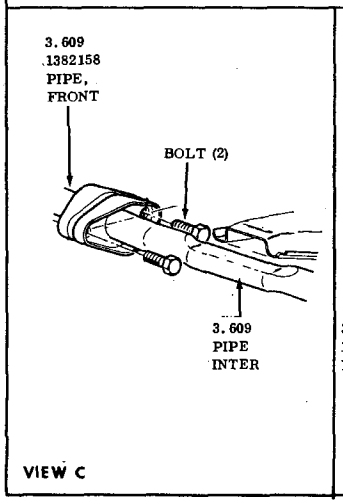

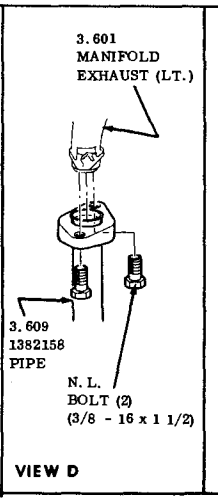

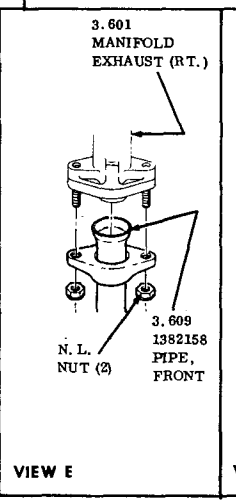

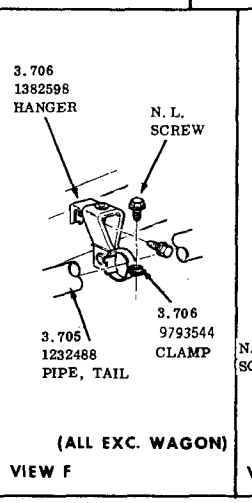

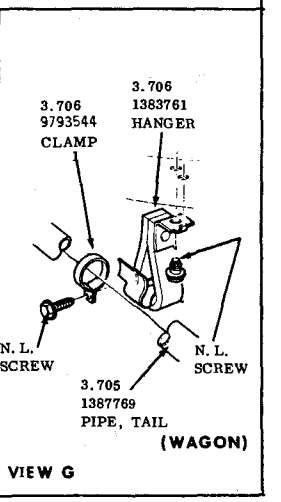

EXHAUST SYSTEM
1970-30-4000
350 C.U. IN. ENG.

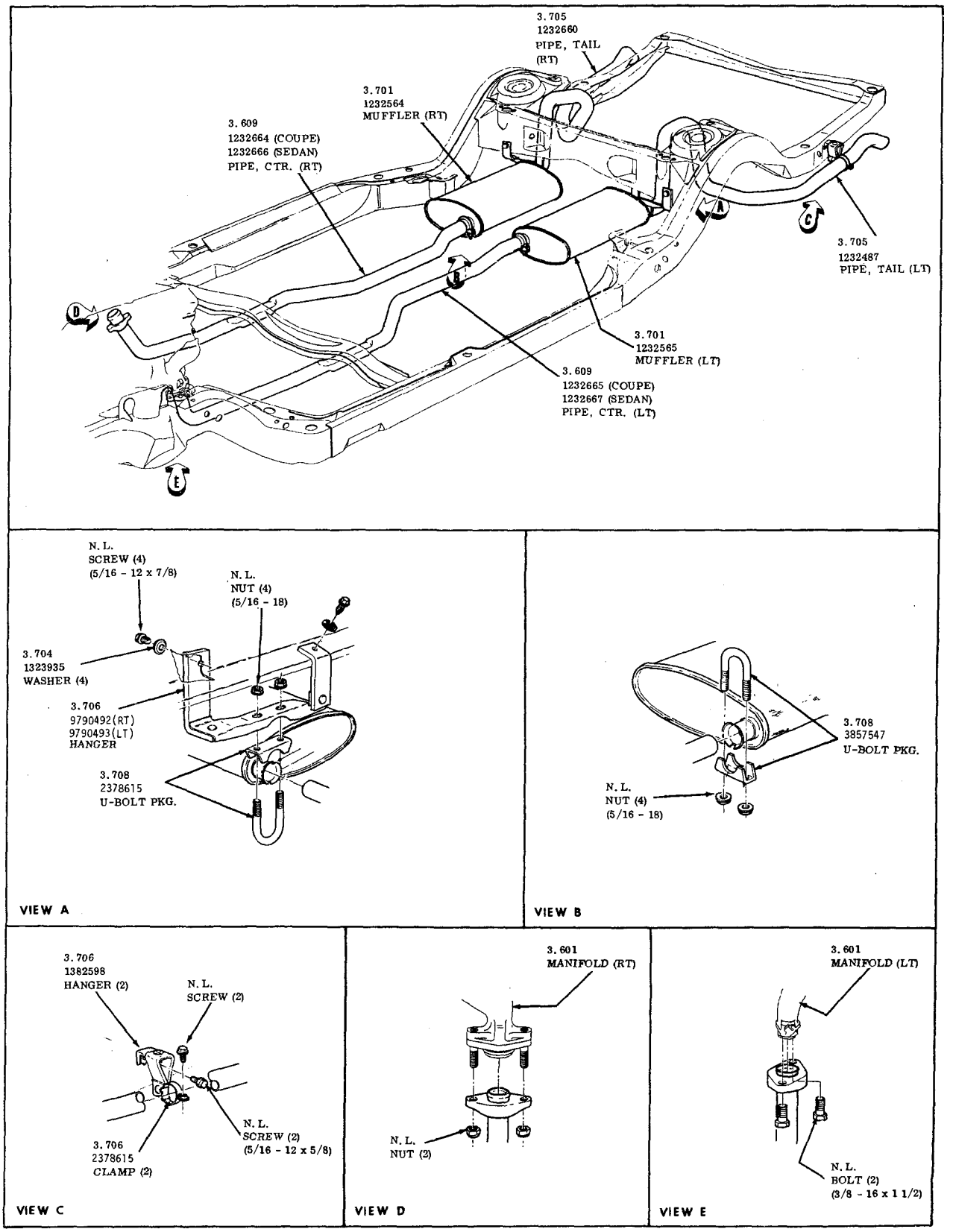

EXHAUST SYSTEM
350 CU. IN. ENGINE DUAL
1970-30-4000

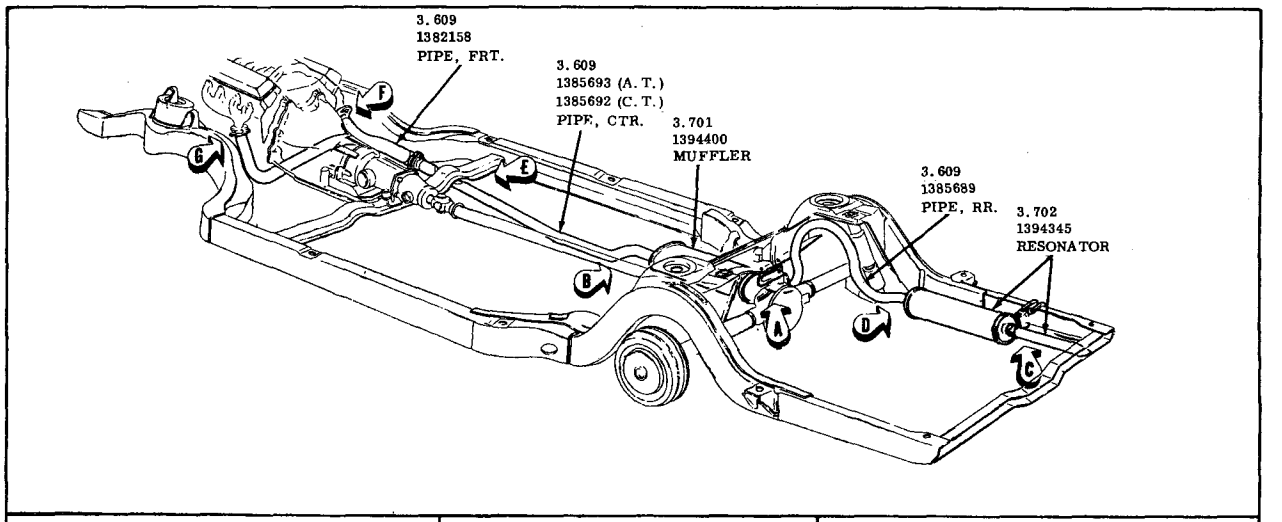

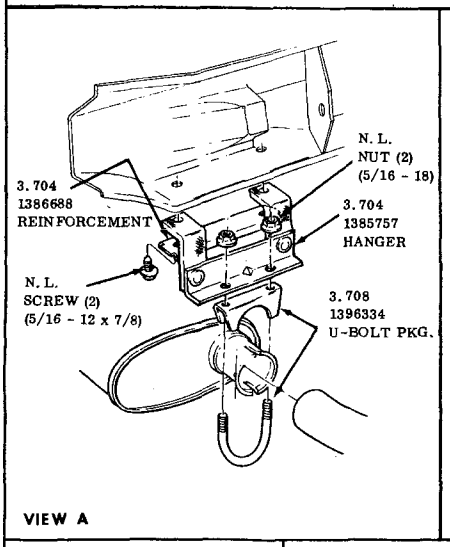

VIEW A

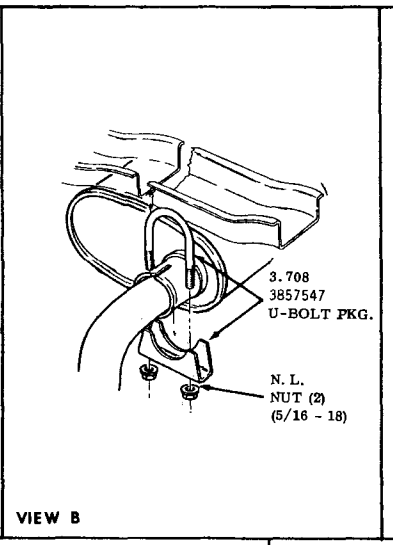

VIEW B

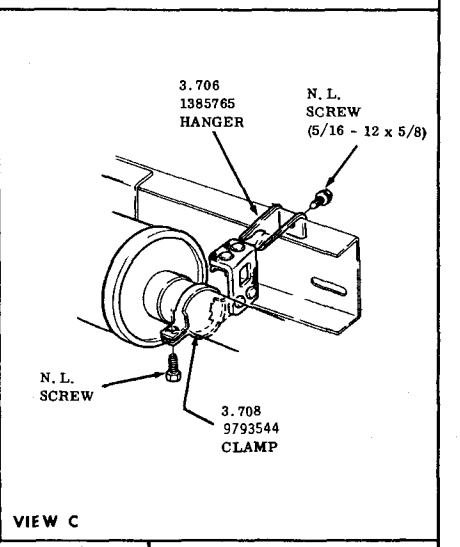

VIEW C

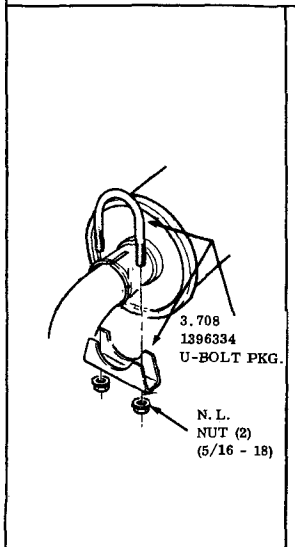

VIEW D

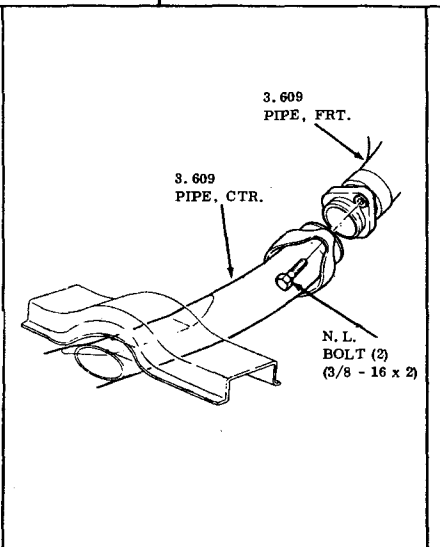

VIEW E

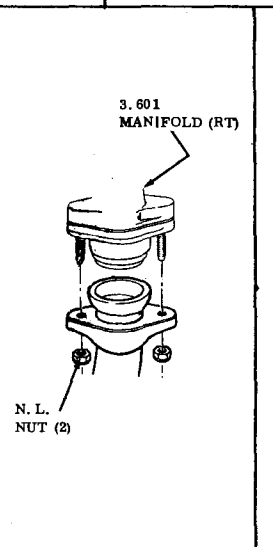

VIEW F

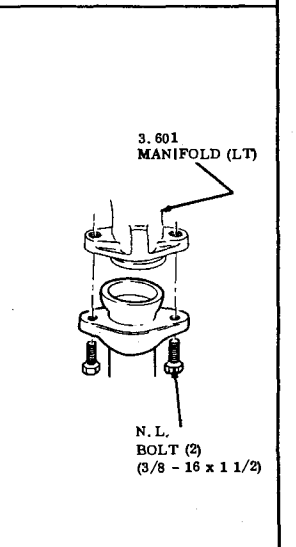

VIEW G

EXHAUST SYSTEM
1970-5000 SINGLE

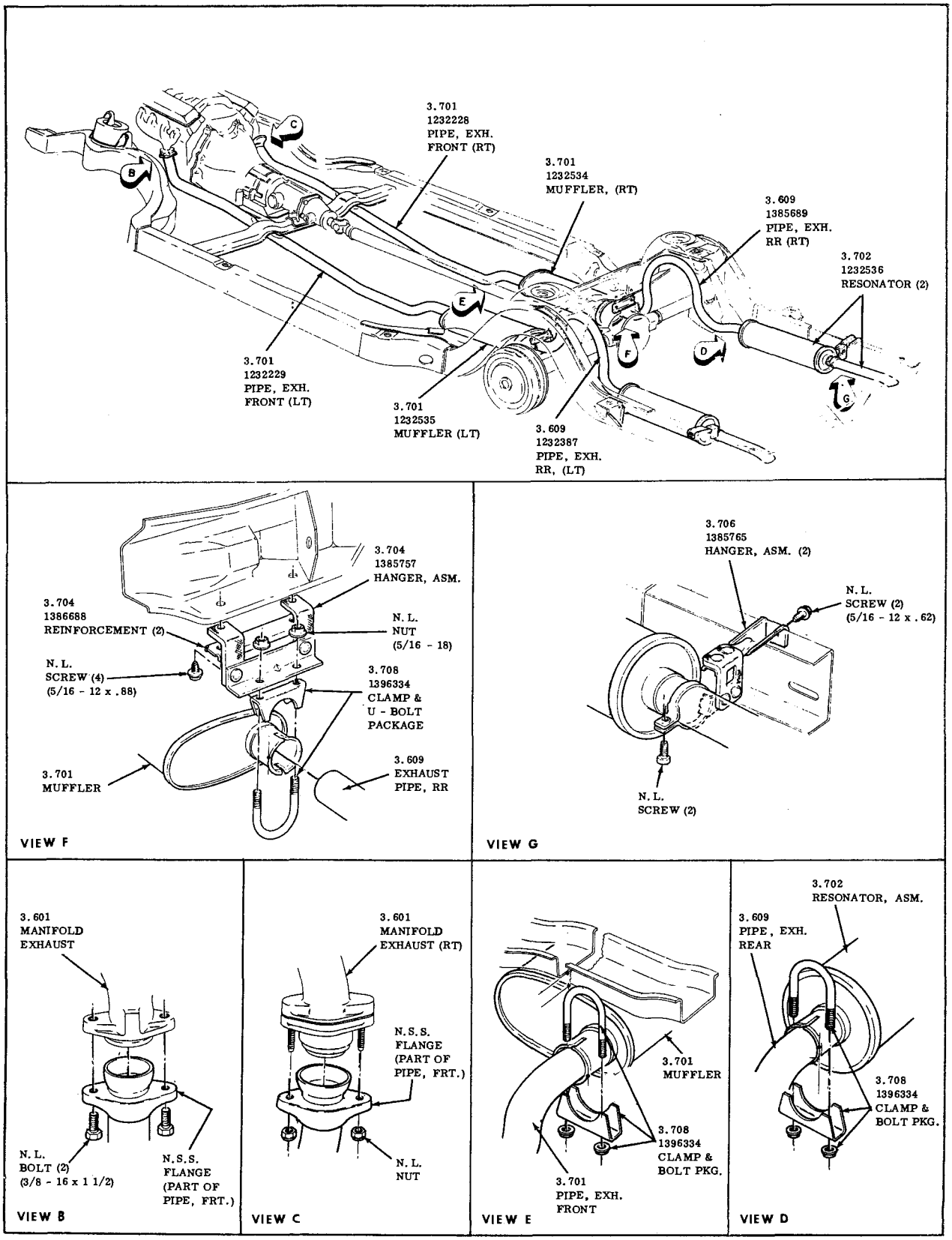

DUAL EXHAUST SYSTEM
1970-5000

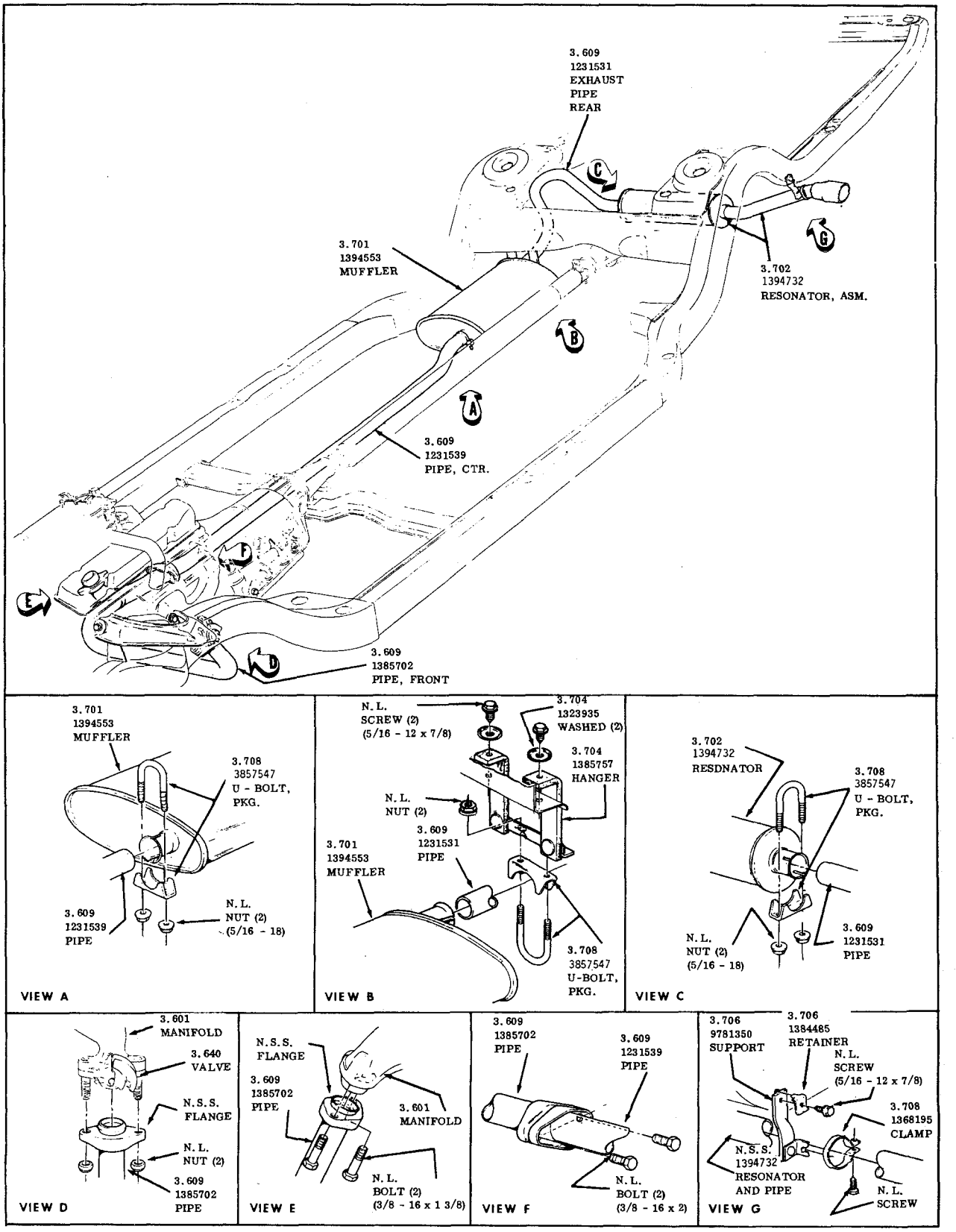

SINGLE EXHAUST SYSTEM

1970-6000 WAGON

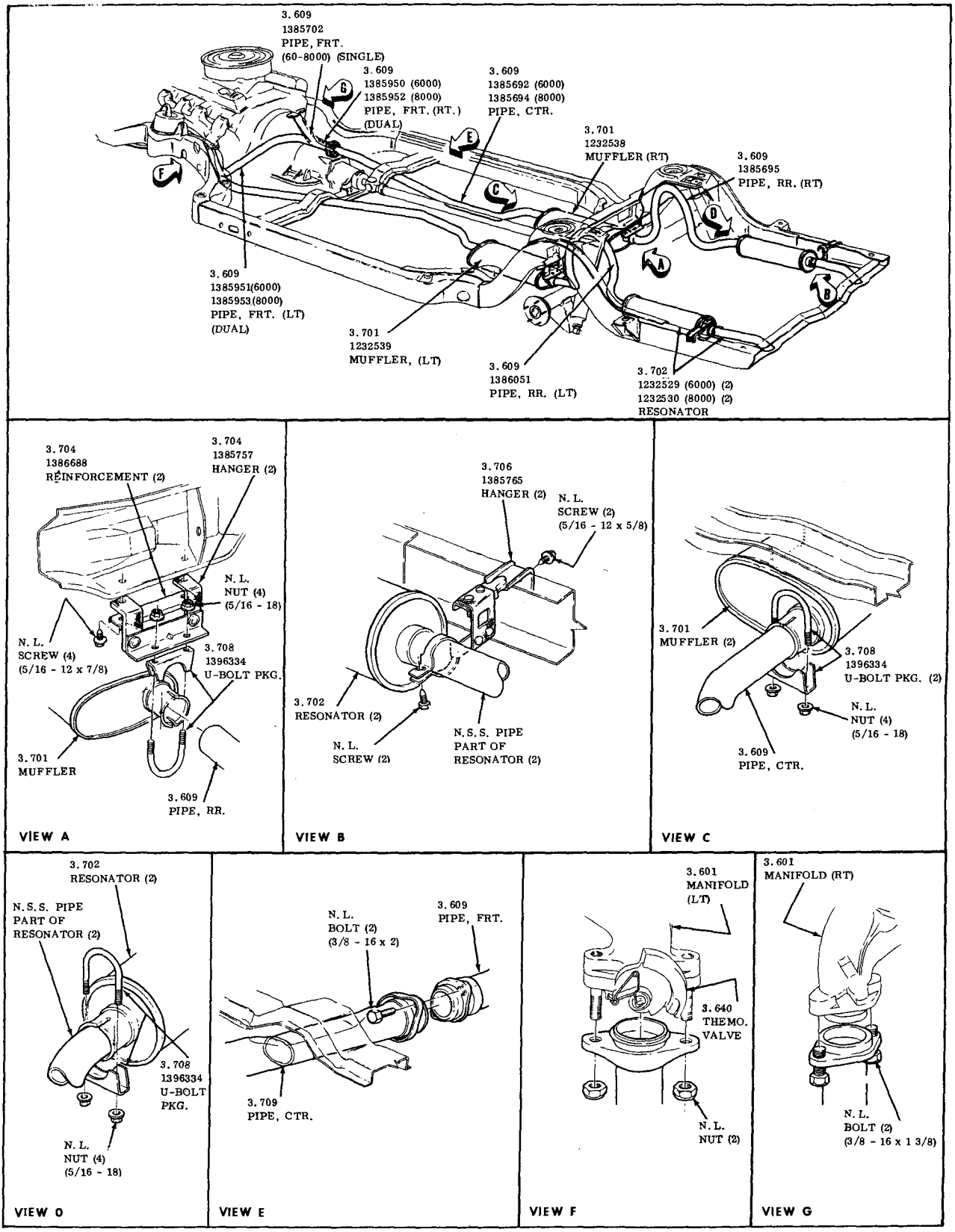

EXHAUST SYSTEM
DUAL & SINGLE
1970-60-8000

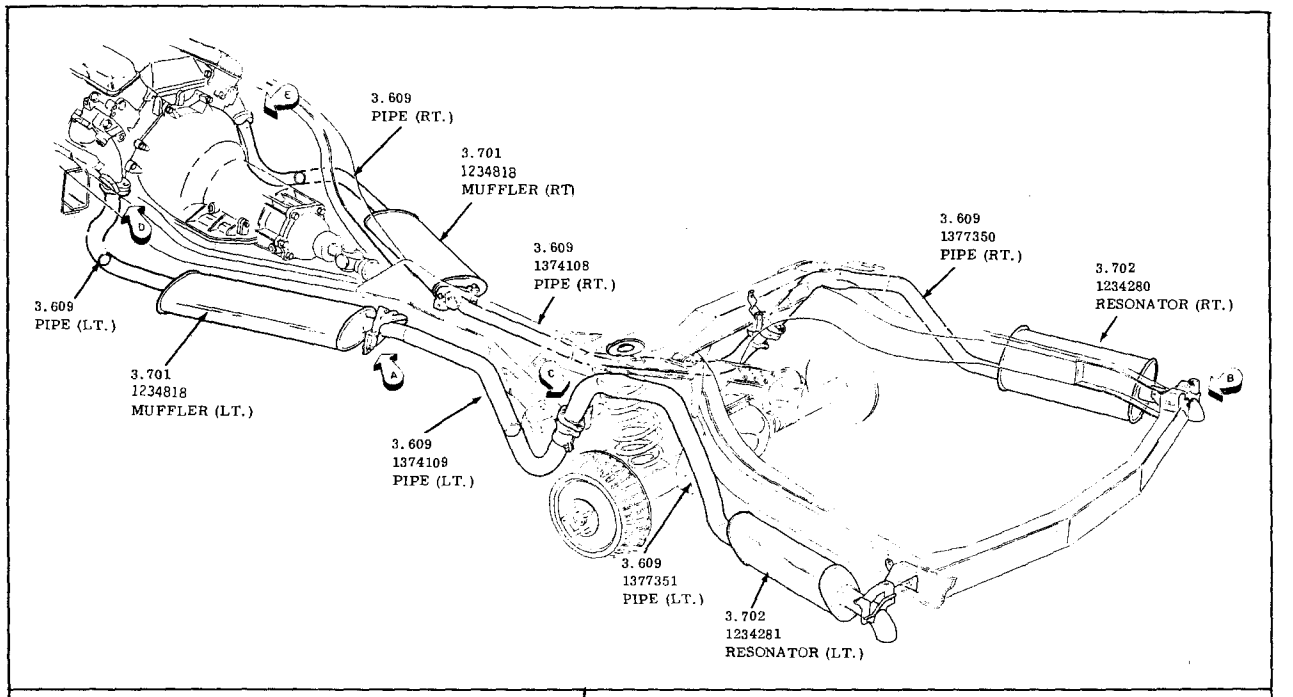

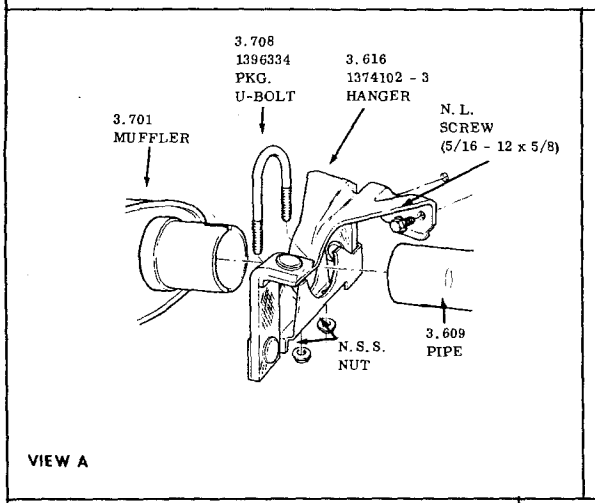

VIEW A

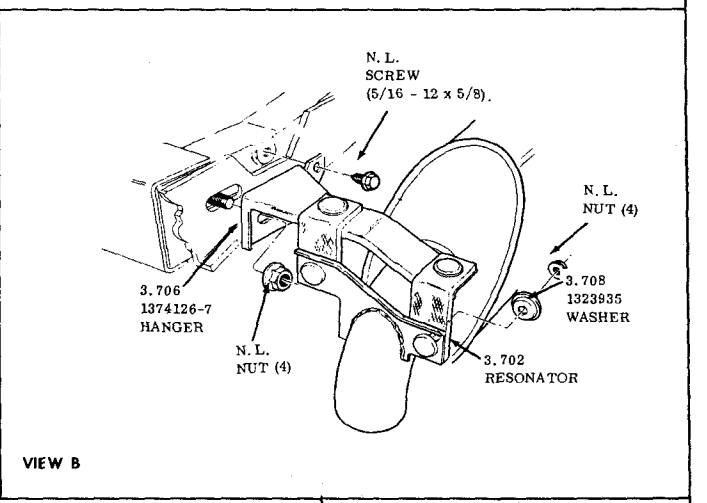

VIEW B

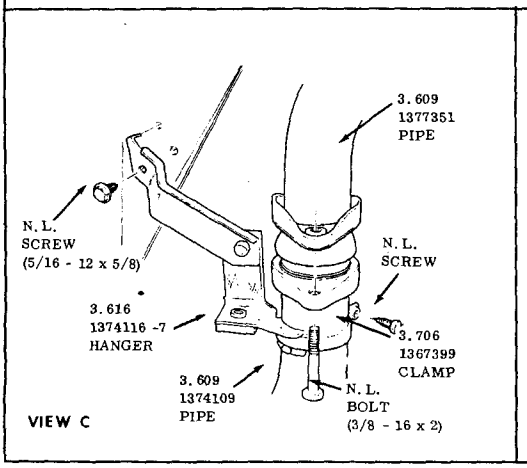

VIEW C

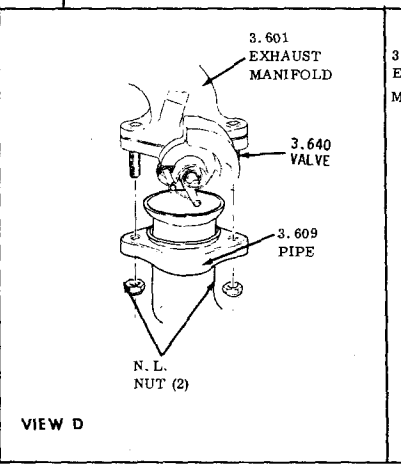

VIEW D

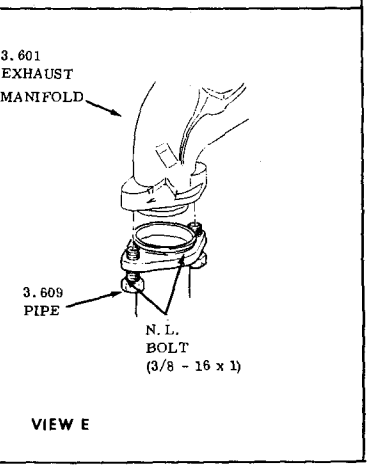

VIEW E

EXHAUST SYSTEM
1970-9000

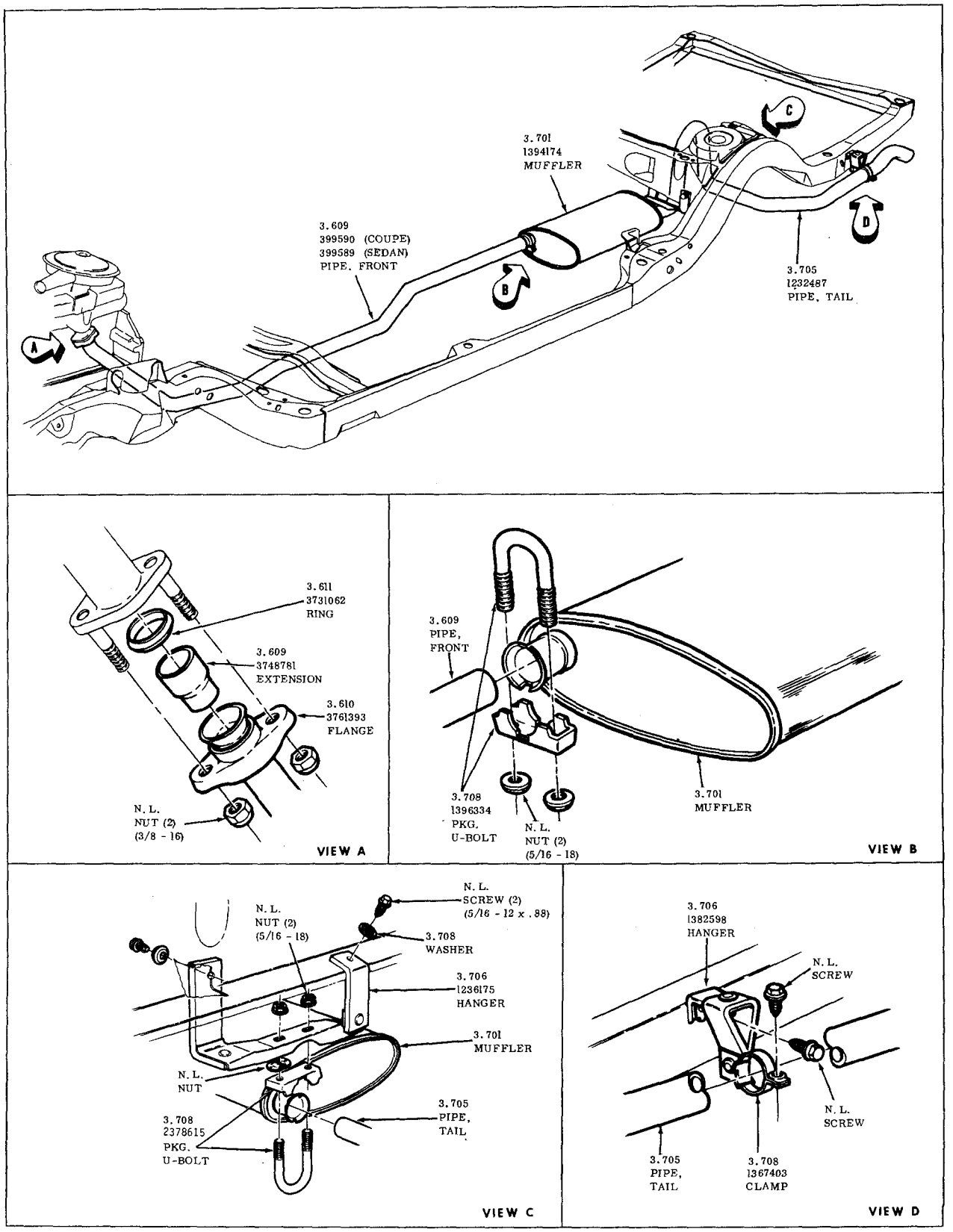

EXHAUST SYSTEM SINGLE

1971 - 250 CU. IN. ENGINE

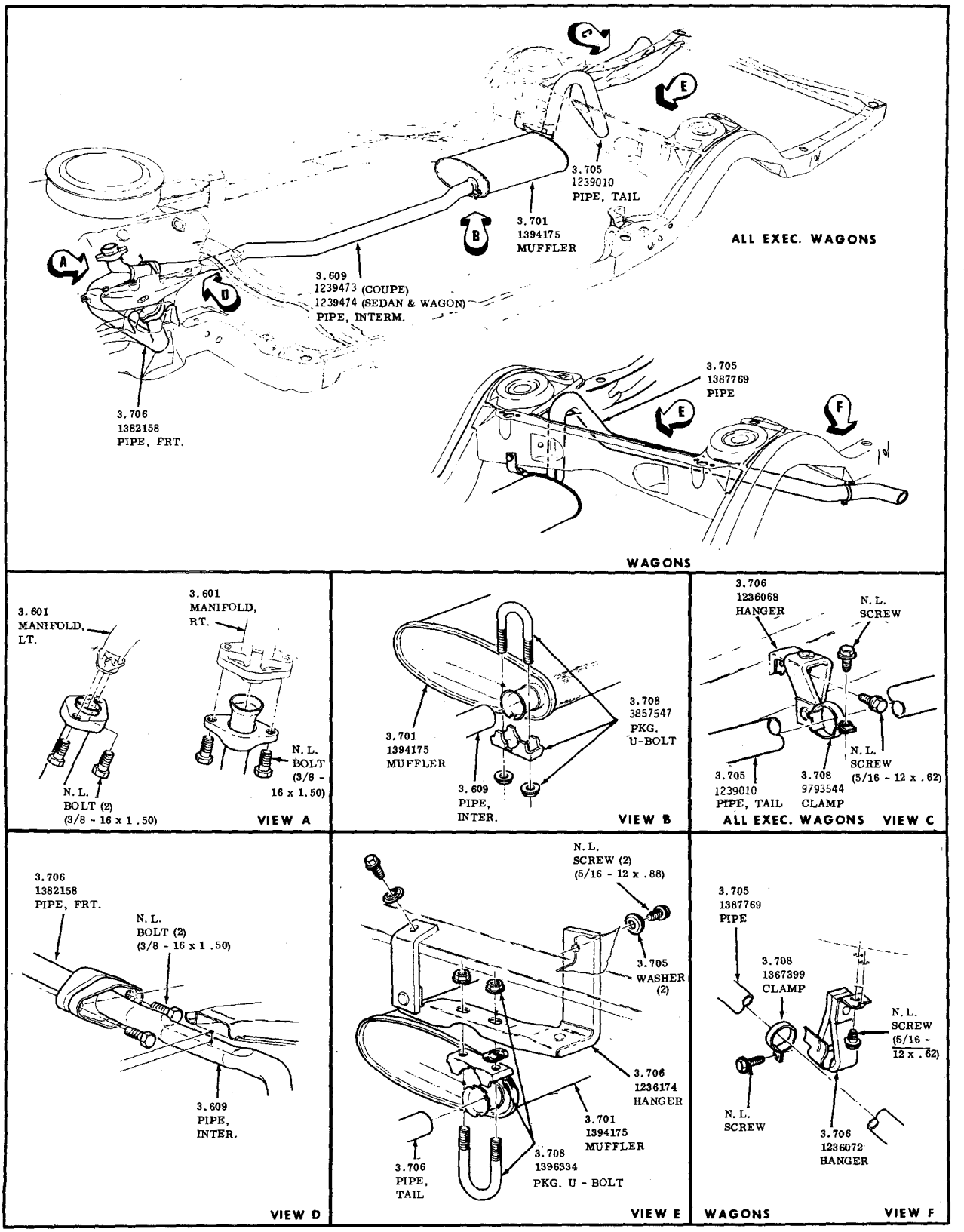

SINGLE EXHAUST SYSTEM
350 CU.IN. ENGINE
1971-1972 30-4000

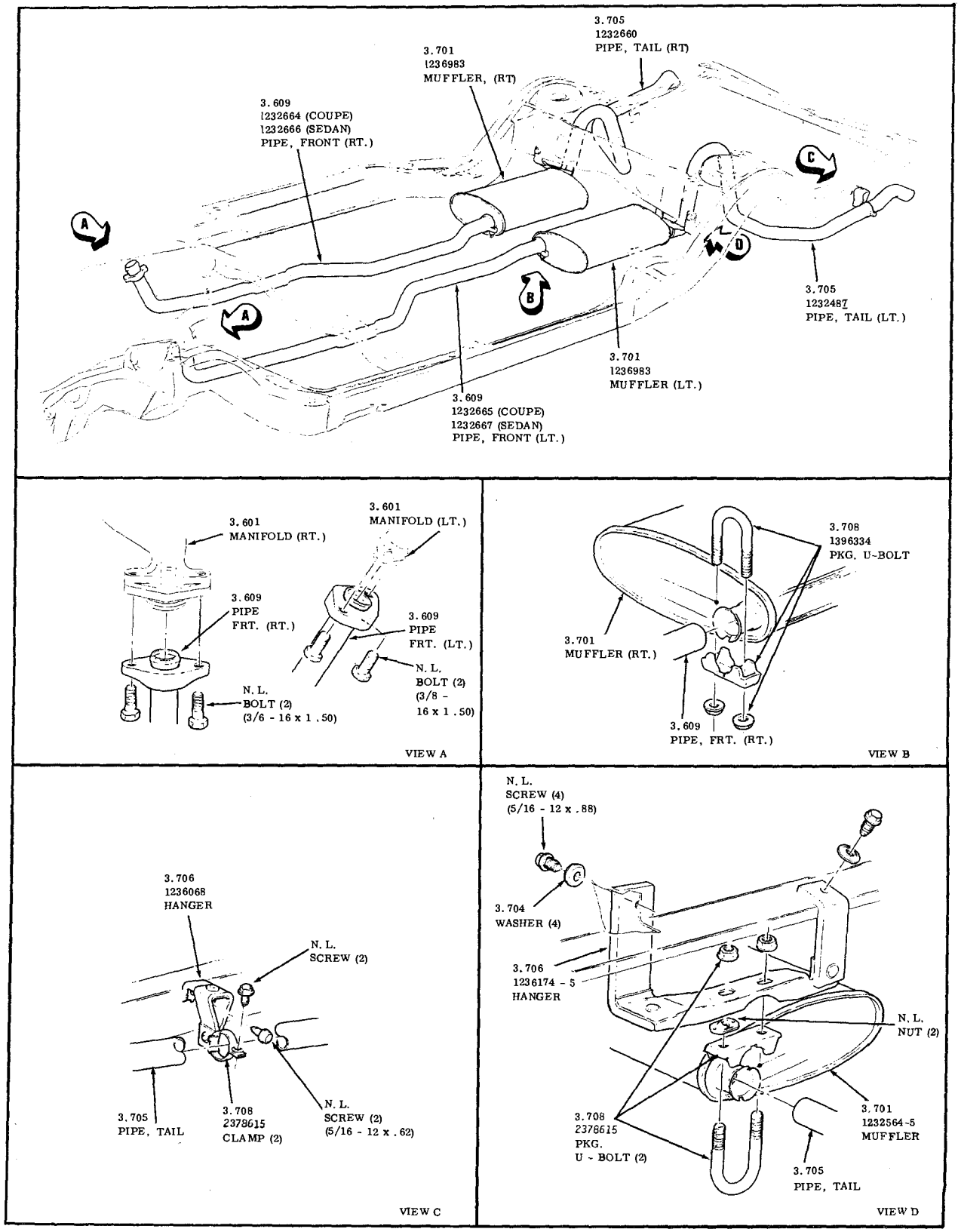

DUAL EXHAUST SYSTEM
350 CU.IN. ENGINE
1971- 1972 30-4000

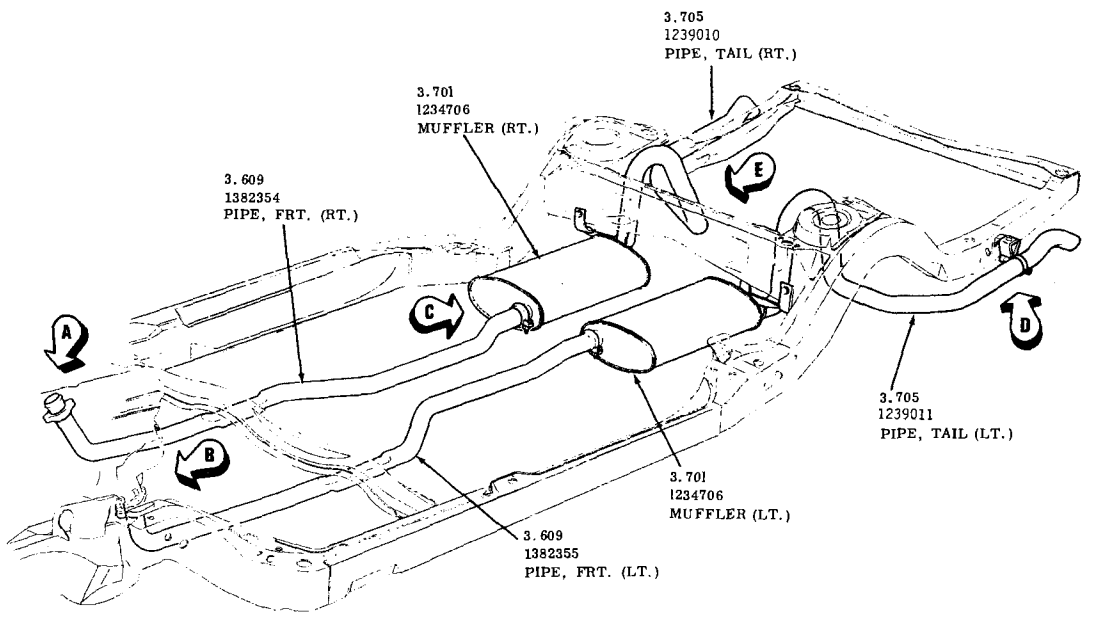

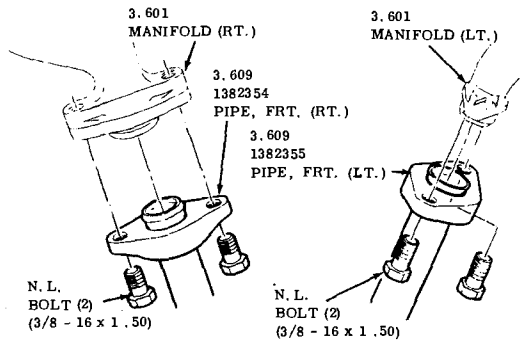

VIEW A

VIEW B

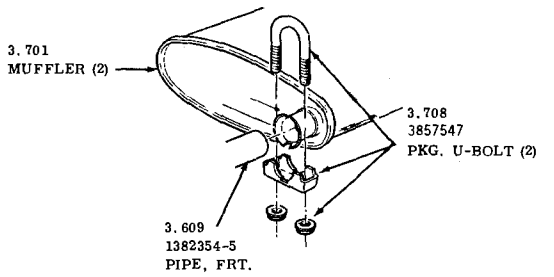

VIEW C

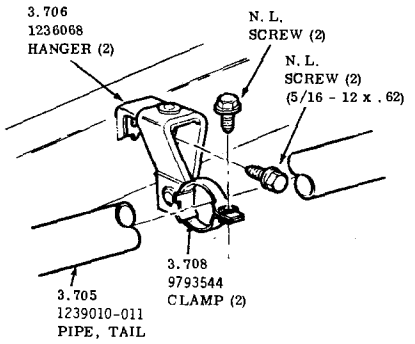

VIEW D

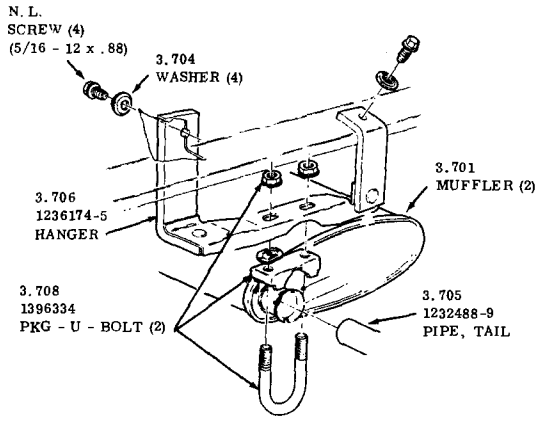

VIEW E

EXHAUST SYSTEM
455 Cu. In. Engine
1971 - 1972 3437-67-4600

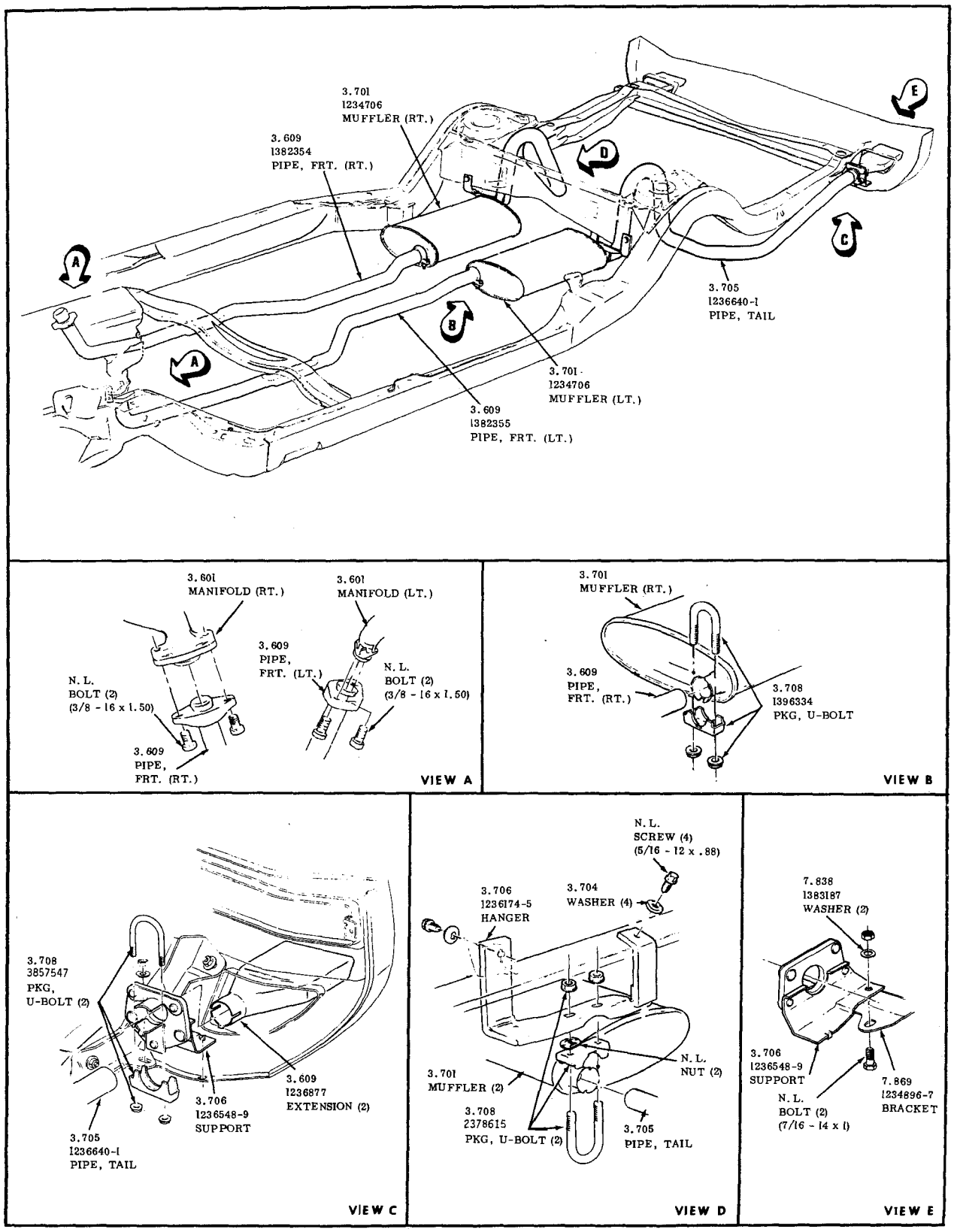

DUAL EXHAUST SYSTEM
1971 - 1972 3437

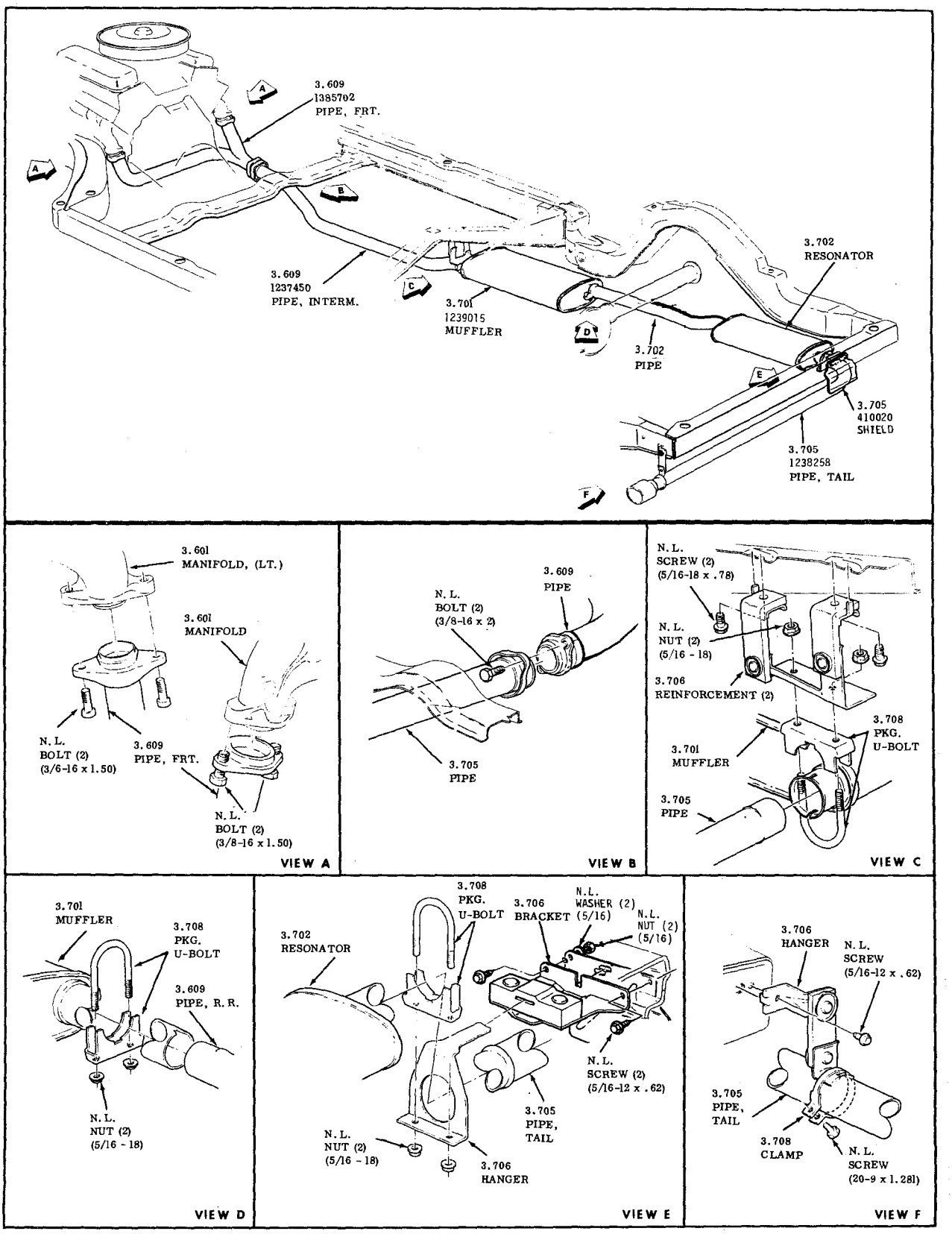

EXHAUST SYSTEM SINGLE

1971-1972 6035-45

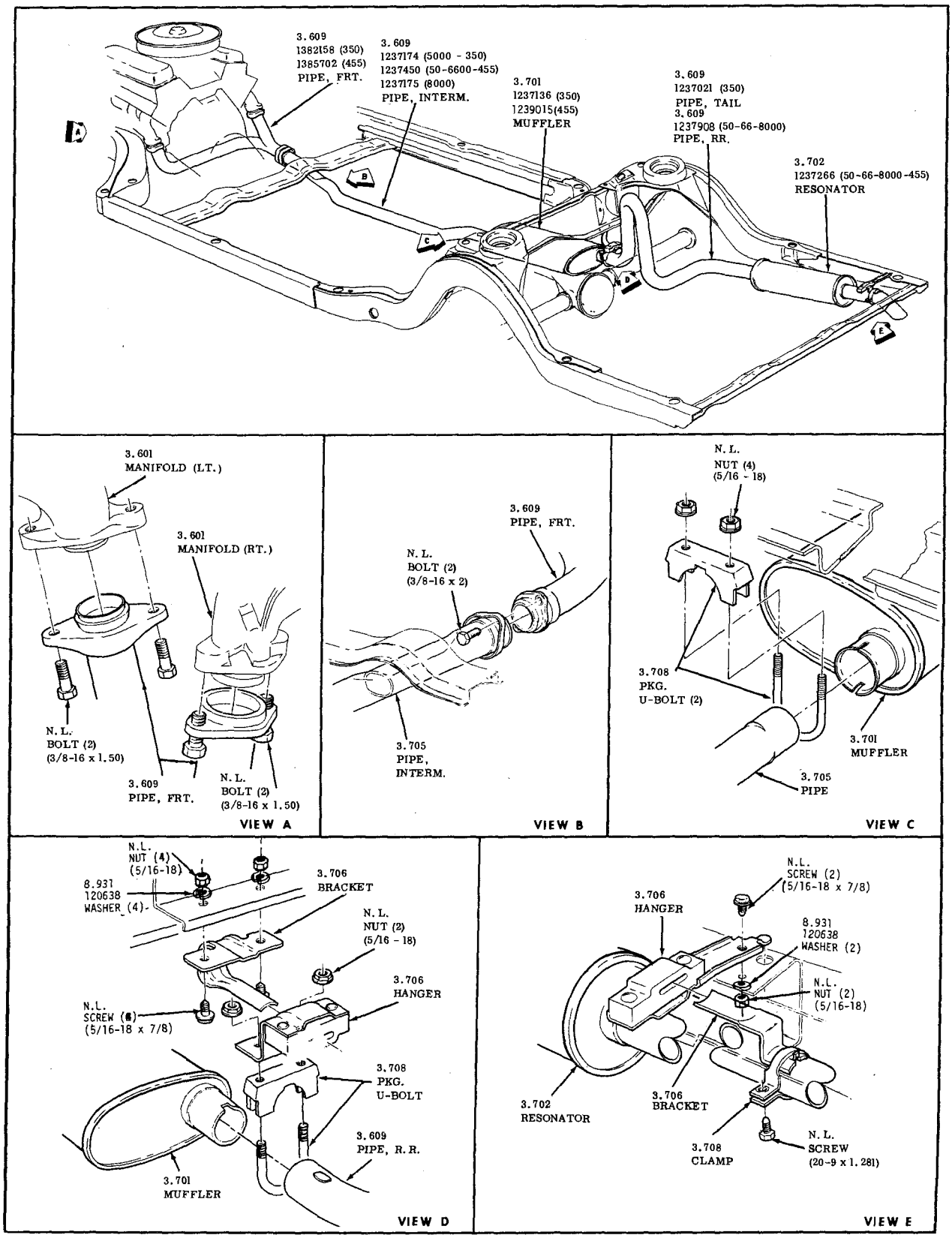

EXHAUST SYSTEM

SINGLE

1971-1972 50-60-8000

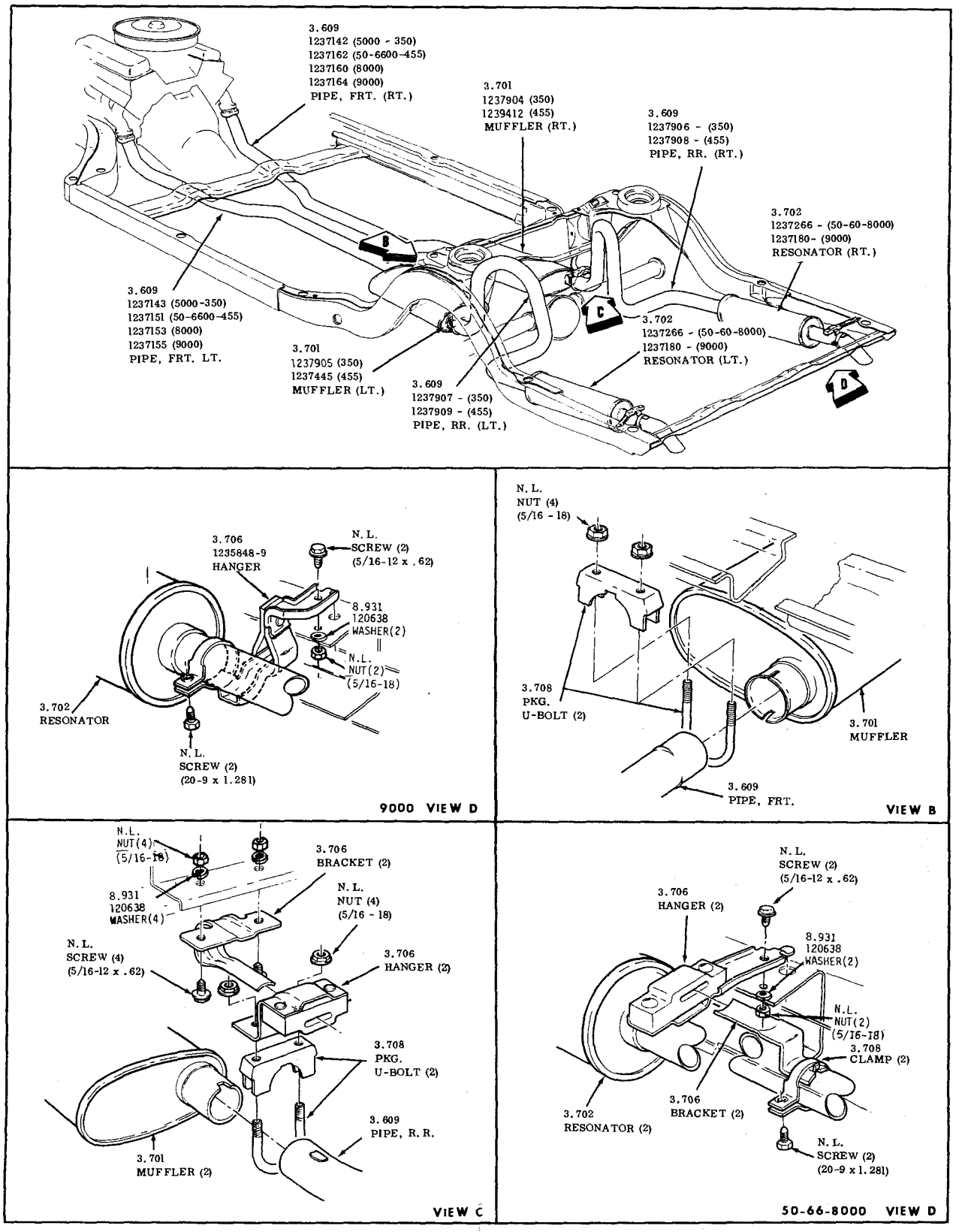

EXHAUST SYSTEM

DUAL

1971-1972 50-66-80-9000

MEMORANDA

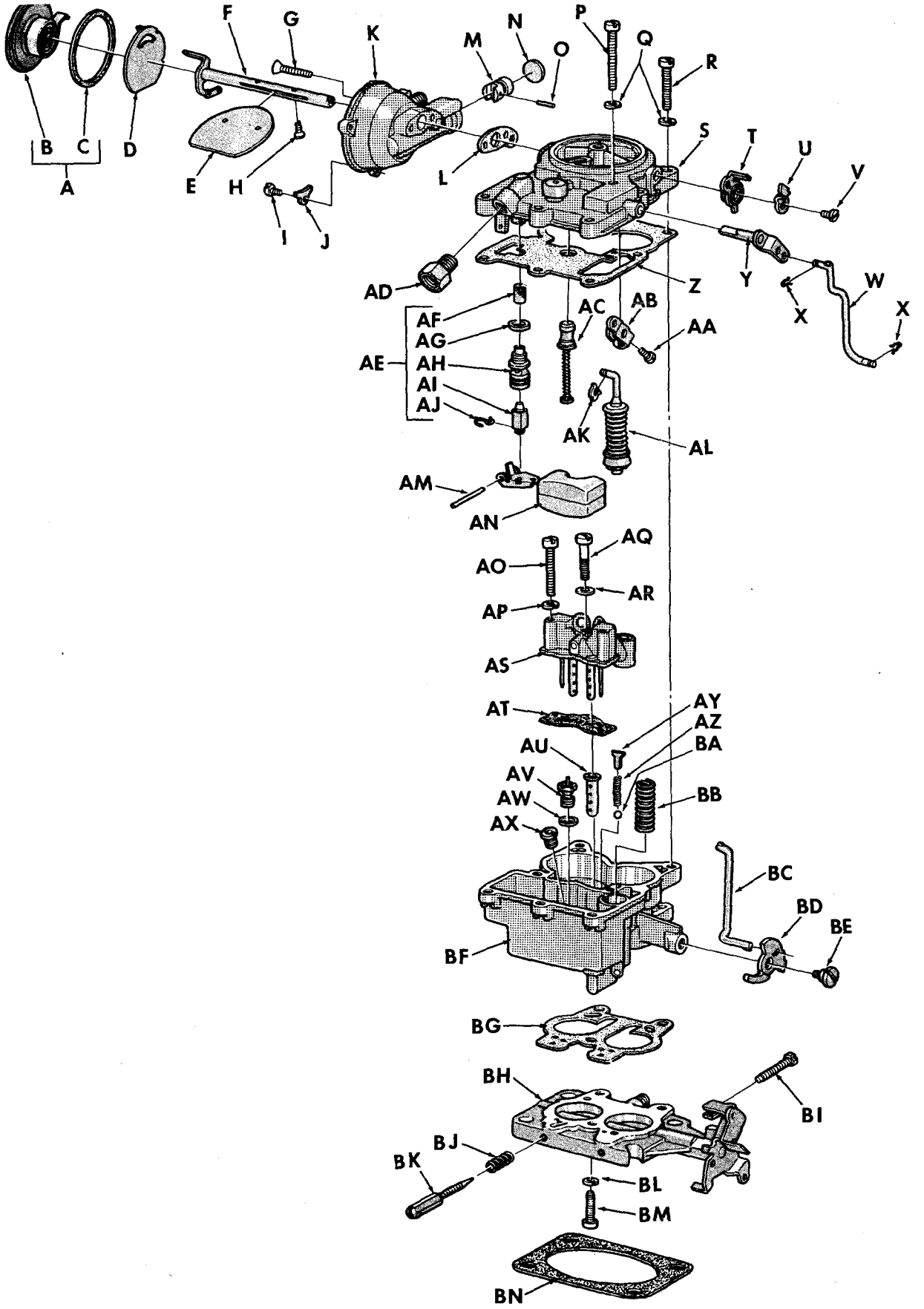
A
B
C
D
E
F
G
H
I
J
K
L
M
N
O
P
Q
R
S
T
U
V
W
X
X
Y
Z
AA
AB
AC
AD
AE
AF
AG
AH
AI
AJ
AK
AL
AM
AN
AO
AP
AQ
AR
AS
AT
AU
AV
AW
AX
AY
AZ
BA
BB
BC
BD
BE
BF
BG
BH
BI
BJ
BK
BL
BM
BN

TYPICAL 2 BARREL CARBURETOR (ROCHESTER) A.T.
1961-1965-4000-4100 V-8

A	COVER, Thermostat (Includes Coil & Gasket)	3.750
B	THERMOSTAT, Cover & Coil	N. L.
C	GASKET, Thermostat Cover	3.750
D	PLATE, Baffle	3.750
E	VALVE, Choke	3.751
F	SHAFT, Choke	3.752
G	SCREW, Choke Housing	3.751
H	SCREW, Choke Valve	3.751
I	SCREW, Thermostat Cover	N. L.
J	RETAINER, Thermostat Coil Cover	3.750
K	HOUSING, Choke Thermostatic	3.750
L	GASKET, Choke Housing	3.750
M	PISTON, Choke	3.752
N	PLUG, Choke Housing Expansion—Large	3.750
O	PIN, Choke Piston	3.752
P	SCREW, Air Horn (Long)	3.730
Q	LOCKWASHER, Air Horn Screws	N. L.
R	SCREW, Air Horn (Short)	3.730
S	HORN, Air	3.730
T	LEVER & COLLAR, Choke	3.752
U	LEVER, Choke Trip	3.752
V	SCREW, Trip Lever	3.752
W	ROD, Pump	3.843
X	SPRING, Countershaft Pin	3.841
Y	SHAFT & LEVER, Pump	3.842
Z	GASKET, Air Horn	3.738
AA	SCREW, Pump Lever	N. L.
AB	LEVER, Pump Inside	3.842
AC	PISTON, Power	3.858
AD	CONNECTOR, Inverted Flared Tube—5/16	8.963
AE	NEEDLE & SEAT	3.814
AF	STRAINER, Fuel Inlet	3.740
AG	GASKET, Needle Seat	3.858
AH	SEAT, Float Valve	N. L.
AI	FLOAT VALVE	N. L.
AJ	CLIP, Float Valve	N. L.
AK	SPRING, Countershaft Pin	3.841
AL	PUMP	3.838
AM	PIN, Float Hinge	3.747
AN	FLOAT	3.745
AO	SCREW, Venturi Cluster—Outer	3.786
AP	LOCKWASHER, Outer Screws	N. L.
AQ	SCREW, Venturi Cluster—Center	3.786
AR	GASKET, Center Screw	3.790
AS	VENTURI CLUSTER	3.786
AT	GASKET, Venturi Cluster	3.790
AU	INSERT, Float Bowl Main Well	3.734
AV	VALVE, Power	3.858
AW	GASKET, Power Valve	3.858
AX	JET, Main Metering—Standard	3.792
AY	GUIDE, Pump Discharge	3.825
AZ	SPRING, Pump Discharge Ball	3.825
BA	BALL, Pump Discharge	3.825
BB	SPRING, Pump Return	3.841
BC	ROD, Choke	3.752
BD	CAM, Fast Idle	3.766
BE	SCREW, Fast Idle Cam Attaching	3.766
BF	BOWL, Float	3.734
BG	GASKET, Throttle Body	3.735
BH	BODY, Throttle	3.729
BI	SCREW, Idle Stop	3.766
BJ	SPRING, Idle Needle	3.823
BK	NEEDLE, Idle Adjusting	3.822
BL	LOCKWASHER, Throttle Body Screws	N. L.
BM	SCREW, Throttle Body	3.741
BN	GASKET, Carburetor to Manifold	3.726

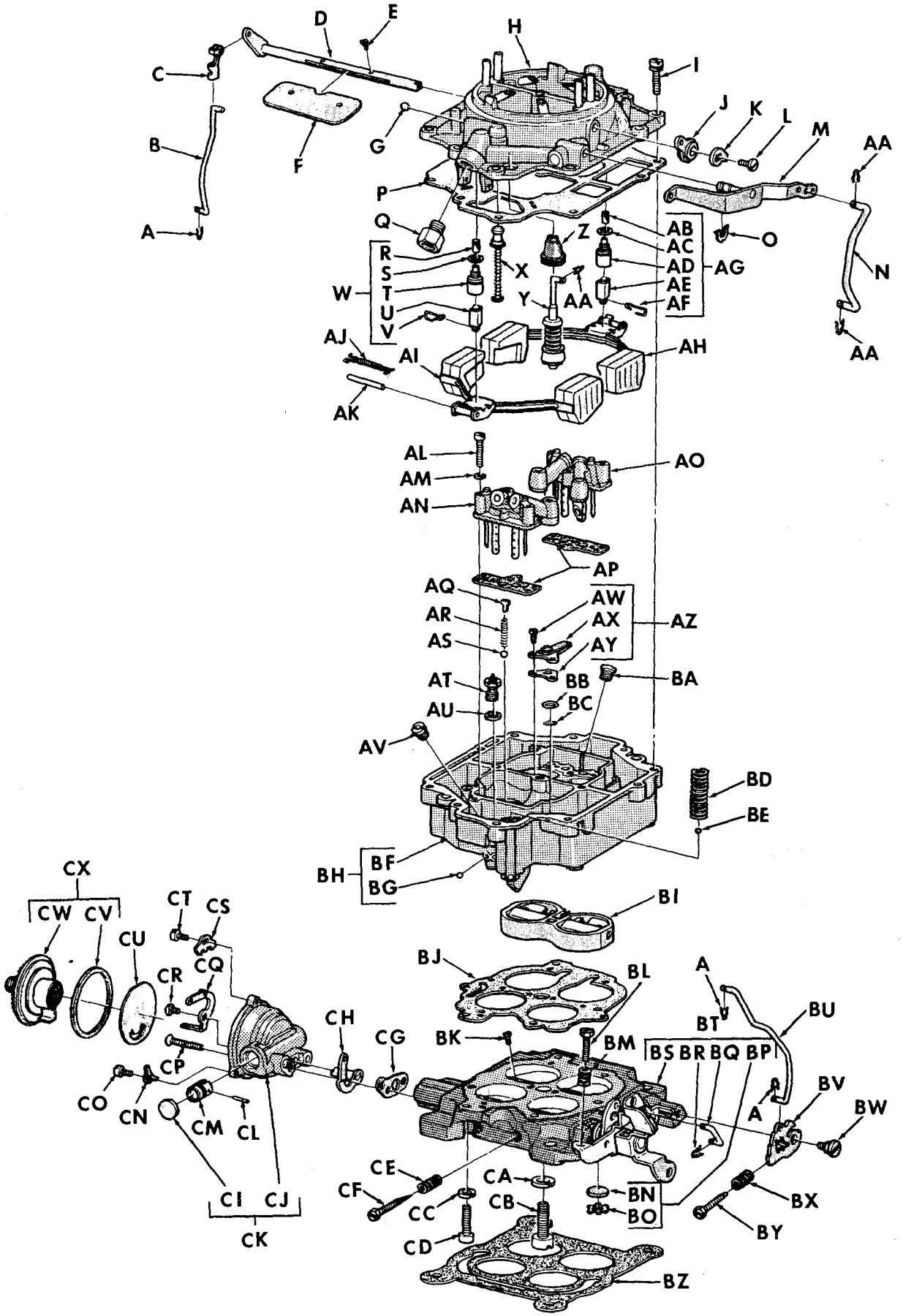
A
B
C
D
E
F
G
H
I
J
K
L
M
N
O
P
Q
R
S
T
U
V
W
X
Y
Z
AA
AB
AC
AD
AE
AF
AG
AH
AI
AJ
AK
AL
AM
AN
AO
AP
AQ
AR
AS
AT
AU
AV
AW
AX
AY
AZ
BA
BB
BC
BD
BE
BF
BG
BH
BI
BJ
BK
BL
BM
BN
BO
BP
BQ
BR
BS
BT
BU
BV
BW
BX
BY
BZ
CA
CB
CC
CD
CE
CF
CG
CH
CI
CJ
CK
CL
CM
CN
CO
CP
CQ
CR
CS
CT
CU
CV
CW
CX

TYPICAL 4 BARREL CARBURETOR (ROCHESTER)
1961-63—4600-4700-4800

A	SPRING, Pin	3.752
B	ROD, Intermediate Choke Shaft Actuating	3.752
C	CLIP, Intermediate Choke Rod Spring	3.752
D	SHAFT & LEVER, Choke	3.752
E	SCREW, Choke Valve	3.751
F	VALVE, Choke	3.751
G	PLUG, Air Horn Lead Ball	3.775
H	HORN, Air	3.730
I	SCREW, Air Horn	3.730
J	LEVER & COLLAR, Choke	3.752
K	LEVER, Choke Trip	3.752
L	SCREW, Trip Lever	3.752
M	SHAFT & LEVER, Pump	3.842
N	ROD, Pump Actuating Lever	3.843
O	CLIP, Pump Shaft & Lever	3.843
P	GASKET, Air Horn to Bowl	3.738
Q	FITTING, Fuel Inlet	3.740
R	STRAINER, Needle Seat	3.740
S	GASKET, Needle Seat	3.858
T	SEAT, Float Valve	N.L.
U	VALVE, Float	N.L.
V	CLIP, Float Valve	N.L.
W	NEEDLE, Seat & Gasket—Primary	3.814
X	PISTON, Power (Includes Spring)	3.858
Y	PUMP	3.838
Z	BOOT, Pump	3.843
AA	SPRING, Countershaft Pin (Pump Rod)	3.841
AB	STRAINER, Needle Seat	3.740
AC	GASKET, Needle Seat	3.858
AD	SEAT, Float Valve	N.L.
AE	VALVE, Float	N.L.
AF	CLIP, Float Valve	N.L.
AG	NEEDLE, Seat & Gasket—Secondary	3.814
AH	FLOAT, Secondary	3.745
AI	FLOAT, Primary	3.745
AJ	SPRING & CLIP, Float Balance	3.747
AK	PIN, Float Hinge	3.747
AL	SCREW, Venturi Cluster	3.786
AM	LOCKWASHER, Cluster Screws	N.L.
AN	VENTURI CLUSTER—Primary	3.786
AO	VENTURI CLUSTER—Secondary	3.786
AP	GASKET, Venturi Clusters	3.790
AQ	GUIDE, Pump Discharge	3.825
AR	SPRING, Pump Discharge Ball	3.825
AS	BALL, Pump Discharge	3.825
AT	VALVE, Power	3.858
AU	GASKET, Power Valve	3.858
AV	JET, Primary Main Metering—Standard	3.792
AW	SCREW, Idle Compensator	3.820
AX	IDLE, Compensator	N.L.
AY	GASKET, Idle Compensator	3.820
AZ	KIT, Idle Compensator	3.820
BA	JET, Main Metering	3.792
BB	RETAINER, Pump Inlet Screen	3.841
BC	SCREEN, Pump Inlet	3.841
BD	SPRING, Pump Return	3.841
BE	BALL, Pump Inlet Check	3.826
BF	BOWL, Float	N.L.
BG	PLUG, Lead Ball	3.775
BH	BOWL, Float	3.734
BI	BODY, Auxiliary Throttle	3.729
BJ	GASKET, Throttle Body	3.735
BK	SCREW, Valve Attaching	3.751
BL	SCREW, Fast Idle Cam	3.766
BM	SPRING, Fast Idle Screw	3.766
BN	CAP, Screw Protecting	N.L.
BO	RING, Internal Retaining	N.L.
BP	CAP & RETAINER, Protecting	3.729
BQ	LINK, Secondary Lever	3.762
BR	SPRING, Countershaft Pin	3.841
BS	BODY, Throttle	N.L.
BT	BODY, Throttle	3.729
BU	ROD, Choke	3.752
BV	CAM, Fast Idle	3.766
BW	SCREW, Cam Attaching	3.766
BX	SPRING, Idle Stop	3.766
BY	SCREW, Idle Stop	3.766
BZ	GASKET, Carburetor to Manifold	3.726
CA	LOCKWASHER, Throttle Body Large Screw	N.L.
CB	SCREW, Throttle Body—Large	3.741
CC	LOCKWASHER, Small Screws	N.L.
CD	SCREW, Throttle Body—Small	3.741
CE	SPRING, Idle Needle	3.823
CF	NEEDLE, Idle Adjusting	3.822
CG	GASKET, Choke Housing	3.750
CH	SHAFT & LEVER, Intermediate Choke	3.752
CI	PLUG, Choke Housing Expansion—Large	3.750
CJ	HOUSING, Choke Thermostat	N.L.
CK	HOUSING, Choke Thermostat	3.750
CL	PIN, Choke Piston	3.752
CM	PISTON, Choke	3.752
CN	RETAINER, Thermostat Coil Cover	3.750
CO	SCREW, Thermostat Cover	N.L.
CP	SCREW, Choke Housing	3.751
CQ	LEVER & LINK, Choke	3.752
CR	SCREW, Choke Piston Lever	3.751
CS	RETAINER, Thermostat Coil Cover—Toothed	3.750
CT	SCREW, Thermostat Cover	N.L.
CU	PLATE, Baffle	3.750
CV	GASKET, Choke Cover	3.750
CW	COVER, Choke Coil	N.L.
CX	COVER, Thermostat (Includes Coil & Gasket)	3.750

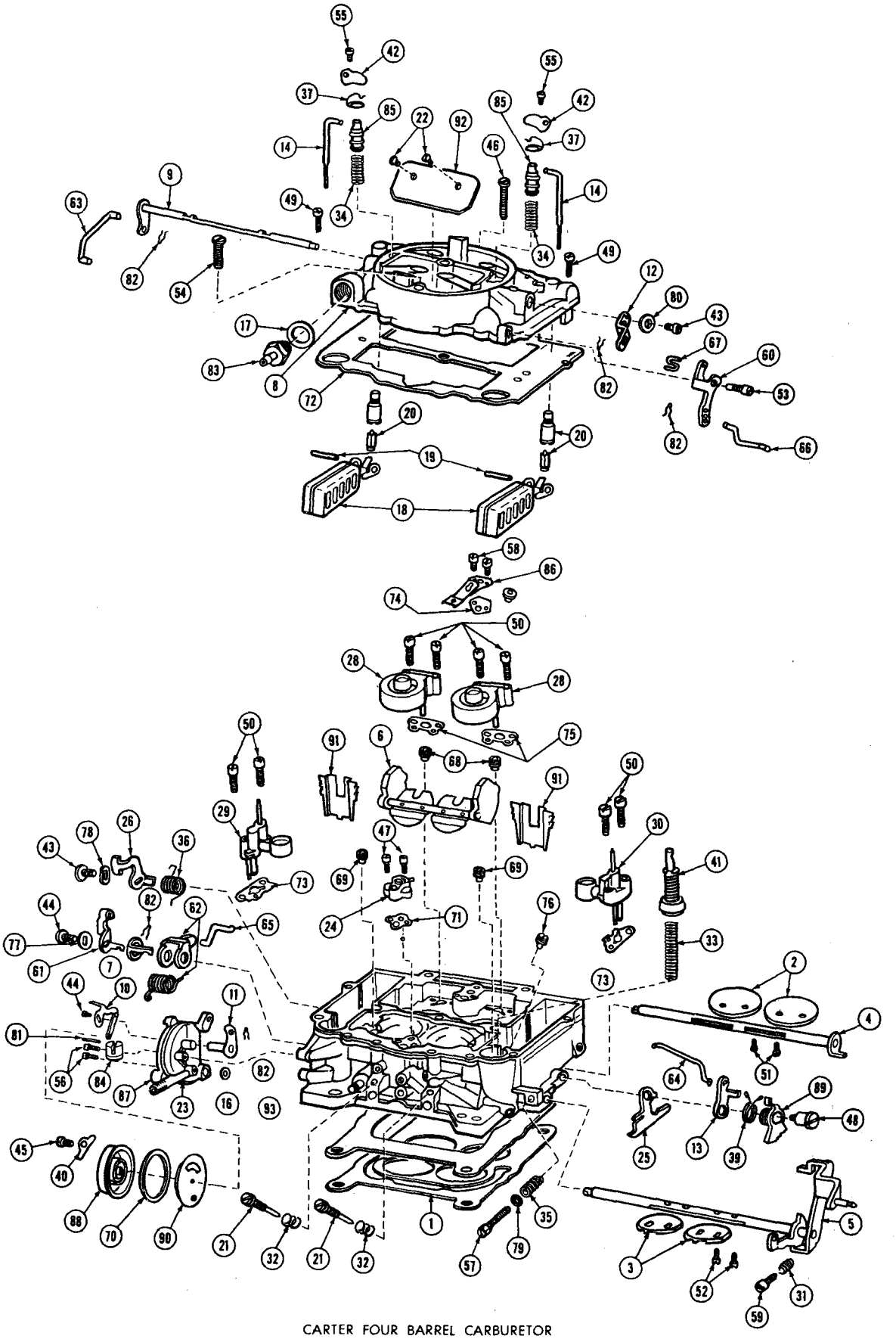

CARTER FOUR BARREL CARBURETOR
1963-1967

CARTER FOUR BARREL CARBURETOR

Key	Description	Group No.
1	Flange gasket	3.726
2	Secondary throttle valve (2)	3.758
3	Primary throttle valve (2)	3.758
4	Secondary throttle shaft and lever assembly	3.759
5	Primary throttle shaft and lever assembly	3.759
6	Auxiliary throttle shaft, valve and weight assembly	3.759
7	Primary throttle shaft dog	3.762
8	Air Horn	N.S.S.*
9	Choke lever and shaft assembly	3.750
10	Choke piston lever and link assembly	3.752
11	Choke shaft and lever assembly (piston housing)	3.750
12	Choke shaft lever	3.752
13	Cam trip lever	3.766
14	Step-up rod (3578S) 16-219 (3503S-SA)	3.858
15	Pump discharge check needle	3.825
16	Piston housing gasket	3.750
17	Fuel inlet fitting gasket	3.740
18	Float and lever assembly (2)	3.745
19	Float lever pin (2)	3.747
20	Needle and seat assembly (2)	3.814
21	Idle adjustment screw (2)	3.822
22	Choke valve attaching screw (2)	3.751
23	Piston housing welch plug (not shown)	N.L.
24	Pump jet housing assembly	3.844
25	Lockout dog	3.762
26	Secondary throttle operating lever	3.759
27	Secondary venturi assembly - choke side	3.786
28	Secondary venturi assembly - pump side	3.786
29	Primary venturi assembly - choke side (1)	3.786
30	Primary venturi assembly - pump side (2)	3.786
31	Fast idle adjusting screw spring	3.766
32	Idle adjustment screw spring (2)	3.823
33	Pump spring (lower)	N.L.
34	Vacuum piston spring (2)	3.859
35	Throttle lever adjusting screw spring	3.761
36	Secondary throttle return spring	3.763
37	Step-up rod retaining spring (2)	3.858
38	Throttle flex spring	3.763
39	Fast idle cam spring	3.767
40	Coil housing retainer (3)	3.750
41	Pump plunger rod and spring assembly	3.838
42	Step-up piston cover plate (2)	3.858
43	Choke shaft lever attaching screw (2)	3.751
44	Throttle shaft lever attaching screw (2)	N.L.
45	Coil housing attaching screw (3)	N.L.
46	Air horn attaching screw and washer assembly	3.730
47	Pump jet housing attaching screw and washer assembly (2)	3.732
48	Fast idle cam attaching screw	3.766
49	Air horn attaching screw and washer assembly (8)	3.730
50	Secondary and primary venturi attaching screw and washer assembly (8)	3.786
51	Secondary throttle valve attaching screw (4)	3.761
52	Primary throttle valve attaching screw (4)	3.761
53	Pump arm attaching screw	3.838
54	Air horn attaching screw and washer assembly	3.730
55	Step-up piston cover plate attaching screw and washer assembly (2)	3.858
56	Piston housing attaching screw (3)	3.750
57	Throttle lever adjusting screw	3.761
58	Thermostatic valve attaching screw and washer assembly (2)	3.750
59	Fast idle adjustment screw	3.766
60	Pump arm	3.845
61	Primary throttle shaft arm (outer)	3.759
62	Primary throttle shaft arm (inner)	3.759
63	Choke connector rod	3.766
64	Fast idle connector rod	3.752
65	Throttle operating rod	3.762
66	Throttle connector rod	3.843
67	Pump connector link	3.843
68	Secondary metering jet (2)	3.792
69	Primary metering jet (2)	3.792
70	Coil housing gasket	3.750
71	Pump jet housing gasket	3.844
72	Air horn gasket	3.738
73	Primary venturi cluster gasket (2)	3.790
74	Thermostatic valve gasket	3.750
75	Secondary venturi cluster gcsket (2)	3.790
76	Pump intake ball check assembly	3.826
77	Primary throttle shaft washer	3.762
78	Secondary throttle shaft washer	3.762
79	Throttle lever adjusting screw washer	3.761
80	Choke piston lever retaining washer	N.L.
81	Choke piston pin	3.752
82	Pin spring (6)	3.752
83	Fuel inlet fitting assembly	3.740
84	Choke piston	3.752
85	Step-up piston (2)	3.858
86	Thermostatic valve assembly	3.750
87	Piston housing and plug assembly	3.750
88	Thermostatic coil and housing assembly	3.750
89	Fast idle cam assembly	3.766
90	Choke baffle plate assembly	3.750
91	Fuel bowl baffle (2)	3.745
92	Choke valve	3.751
93	Float bowl	N.S.S.*

Figures in parentheses indicate number of pieces used in one carburetor. Where no figure is shown, only one is used.
*Serviced only as part of complete carburetor - Group 3.725.

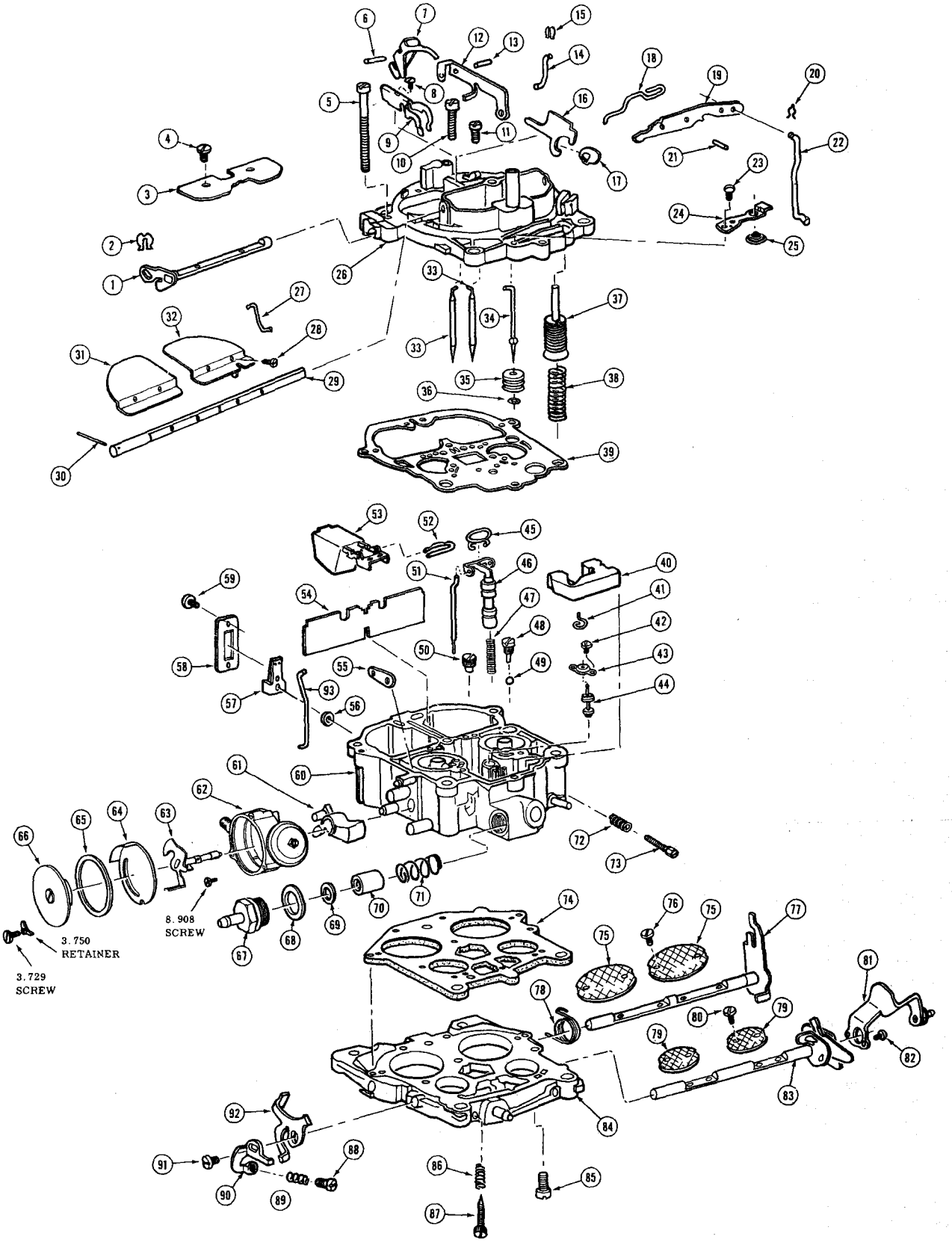
3.750
RETAINER
3.729
SCREW
8.908
SCREW

1966 ROCHESTER FOUR BARREL QUADRAJET CARBURETOR

		Group
1	SHAFT & LEVER, Asm.	3.752
2	CLIP, Choke Rod	3.752
3	VALVE, Choke	3.751
4	SCREW, Choke Valve Attaching	3.751
5	SCREW, Air Horn	3.730
6	ROLL PIN, Air Valve Lockout Lever	8.940
7	MODIFICATION KIT, Air Valve Lockout	3.752
8	SCREW, Mtr. Rod Lever (Incl. in 26)	N.S.S.
9	LEVER, Sec. Mtr. Rod (Incl. in 26)	N.S.S.
10	SCREW, Air Horn	3.730
11	SCREW, Air Horn	3.730
12	LEVER, Dash Pot Actuating	3.757
13	ROLL PIN, Dash Pot Actuating Lever	8.940
14	ROD, Air Valve	3.757
15	CLIP, Air Valve Rod	3.752
16	FOLLOWER, Cam (Incl. in 26)	N.S.S.
17	CAM, Air Valve (Incl. in 26)	N.S.S.
18	LEVER, Idle Vent Valve (Incl. in 24)	N.S.S.
19	LEVER, Pump Actuating	3.842
20	CLIP, Pump Rod	3.843
21	ROLL PIN, Pump Actuating Lever	8.940
22	ROD, Pump Actuating	3.843
23	SCREW, Idle Vent Valve (Also in 24)	3.852
24	VALVE KIT, Idle Vent (Incl. 18, 23, 24, 25)	3.852
25	VALVE, Vent (Also in 24)	3.852
26	AIR HORN ASM.	3.730
27	LINK (Incl. in 7)	N.S.S.
28	SCREW, Air Valve (Incl. in 26)	N.S.S.
29	SHAFT, Air Valve (Incl. in 26)	N.S.S.
30	PIN, Air Valve Shaft (Incl. in 26)	N.S.S.
31	VALVE, Air (Incl. in 26) Rt.	N.S.S.
32	VALVE, Air (Incl. in 26) Lt.	N.S.S.
33	METERING ROD, Secondary	3.806
34	ROD, Dash Pot (Incl. in 35)	N.S.S.
35	POT, Dash	3.440
36	RET., Dash Pot (Incl. in 35)	N.S.S.
37	PUMP ASM.	3.838
38	SPRING, Pump Return	3.841
39	GASKET, Air Horn	3.738
40	INSERT, Float Bowl	3.734
41	CLIP, Float Needle Pull	3.814
42	SCREW, Float Needle Retainer Attaching	3.729
43	RETAINER, Float Needle Asm.	3.814
44	NEEDLE & DIAPHRAGM ASM., Float	3.814
45	SPRING, Metering Rod - Primary	3.810
46	POWER PISTON ASM., Primary	3.858
47	SPRING, Power Piston	3.858
48	RETAINER, Pump Discharged Ball	3.825
49	BALL, Pump Discharge (3/16" Chrome)	3.825
50	JET, Primary	3.792
51	METERING ROD, Primary	3.806
52	PIN, Float Hinge	3.747
53	FLOAT ASM.	3.745
54	BAFFLE, Float Bowl	3.734
55	LEVER, Intermedicate Choke	3.752
56	GASKET, Idle Compensator	3.820
57	COMPENSATOR ASM., Idle	3.820
58	COVER, Idle Compensator	3.820
59	SCREW, Idle Compensator Cover	3.820
60	BOWL ASM., Float	3.734
61	CAM, Fast Idle	3.766
62	HOUSING, Choke	3.750
63	SHAFT AND LEVER, Choke Housing (Incl. in 62)	N.S.S.
64	PLATE, Baffle	3.750
65	GASKET, Stat Cover	3.750
66	COVER AND COIL, Stat	3.750
67	NUT, Fuel Inlet Filter	3.740
68	GASKET, Fuel Filter Nut	3.740
69	GASKET, Fuel Filter	3.740
70	FILTER, Fuel Inlet	3.740
71	SPRING, Fuel Inlet	3.740
72	SPRING, Idle Stop Screw	3.766
73	SCREW, Idle Stop	3.766
74	GASKET, Throttle Body	3.725
75	VALVE, Throttle, Sec. (Incl. in 84)	N.S.S.
76	SCREW, Valve (Incl. in 84)	N.S.S.
77	SHAFT & LEVER, Sec. Throttle (Incl. in 84)	N.S.S.
78	SPRING, Sec. Lever & Shaft (Incl. in 84)	N.S.S.
79	VALVE, Primary (Incl. in 84)	N.S.S.
80	SCREW, Valve (Incl. in 84)	N.S.S.
81	LEVER, Primary Throttle	3.759
82	SCREW, Lever	3.762
83	SHAFT & LEVER, (Incl in 84) Pri.	N.S.S.
84	THROTTLE BODY	3.729
85	SCREW, Throttle Body	3.741
86	SPRING, Idle Needle	3.823
87	NEEDLE, Idle Air Adjusting	3.822
88	SCREW, Fast Idle Adjusting	3.766
89	SPRING, Fast Idle Adjusting Screw	3.766
90	LEVER, Fast Idle	3.766
91	SCREW, Cam and Fast Idle Levers	3.762
92	CAM, Fast Idle Lever	3.766
93	ROD, Choke (Incl. in 7)	N.S.S.

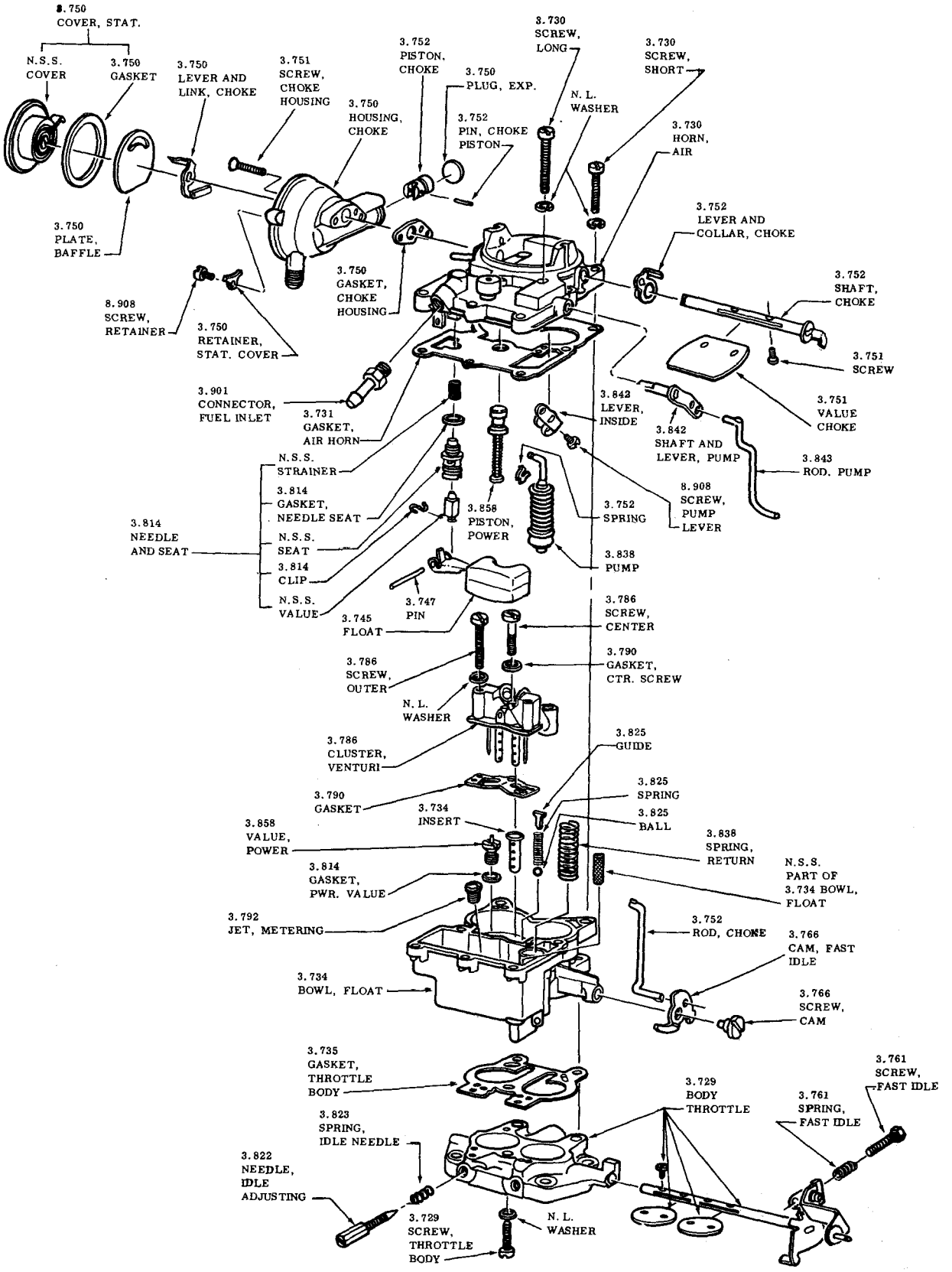

ROCHESTER CARBURETOR
TWO BARREL - VB
1966-1967—SPECIAL—SKYLARK

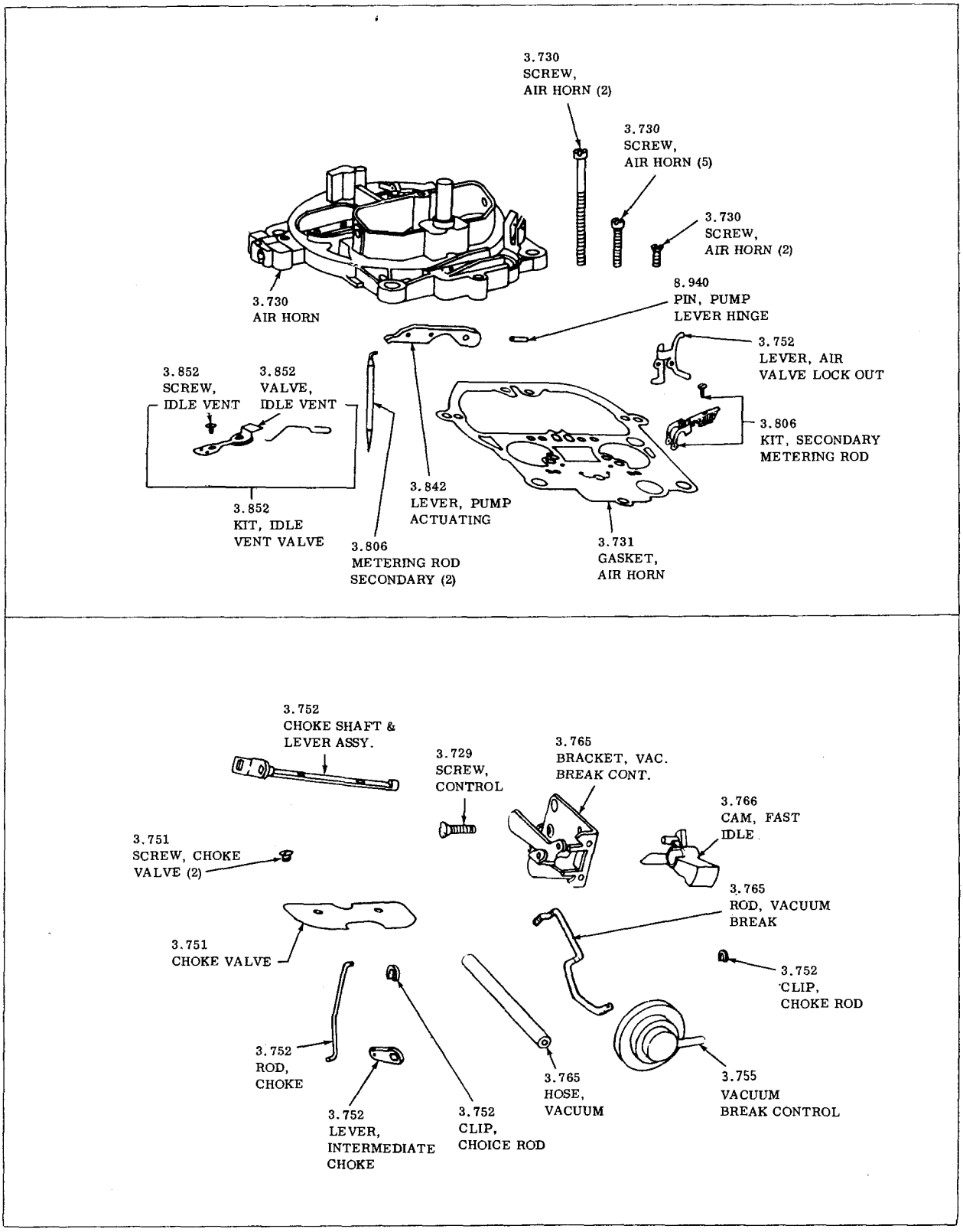

1967 ROCHESTER 4—BARREL
CARBURETOR
(400—430 ENGINE)

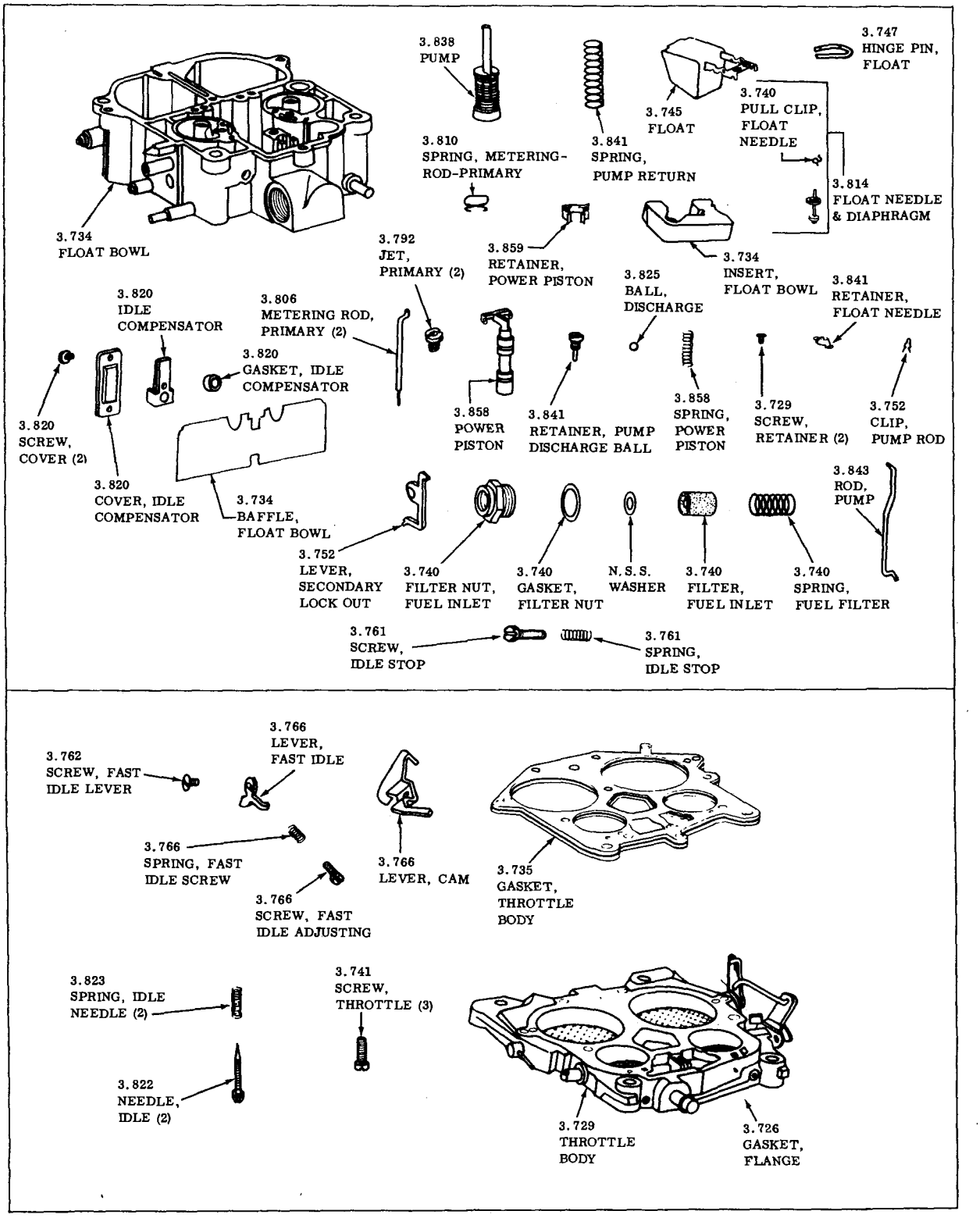

1967 ROCHESTER 4—BARREL
CARBURETOR
(400—430 ENGINE)

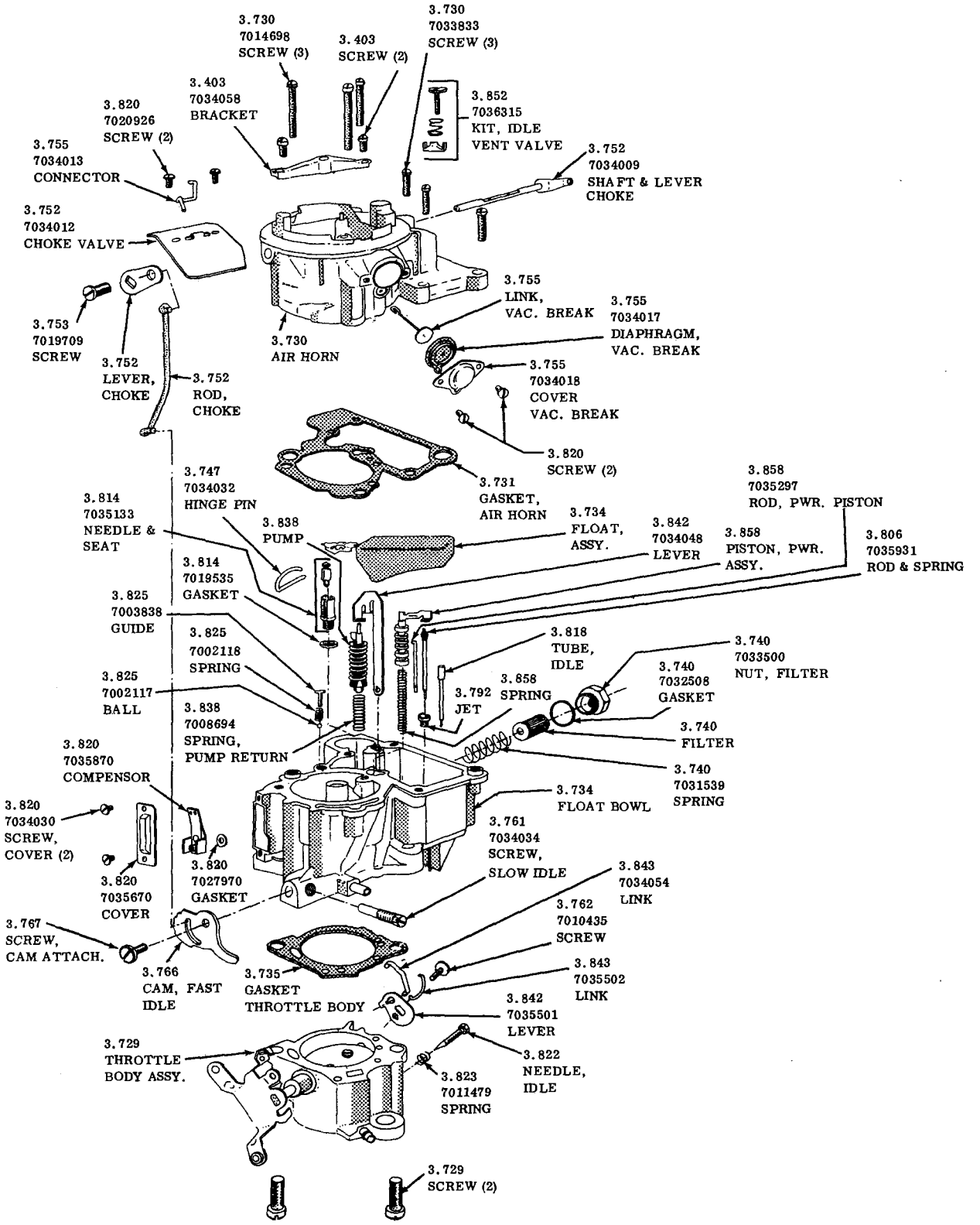

TYPICAL
ROCHESTER CARBURETOR
1968-69-250 ENGINE

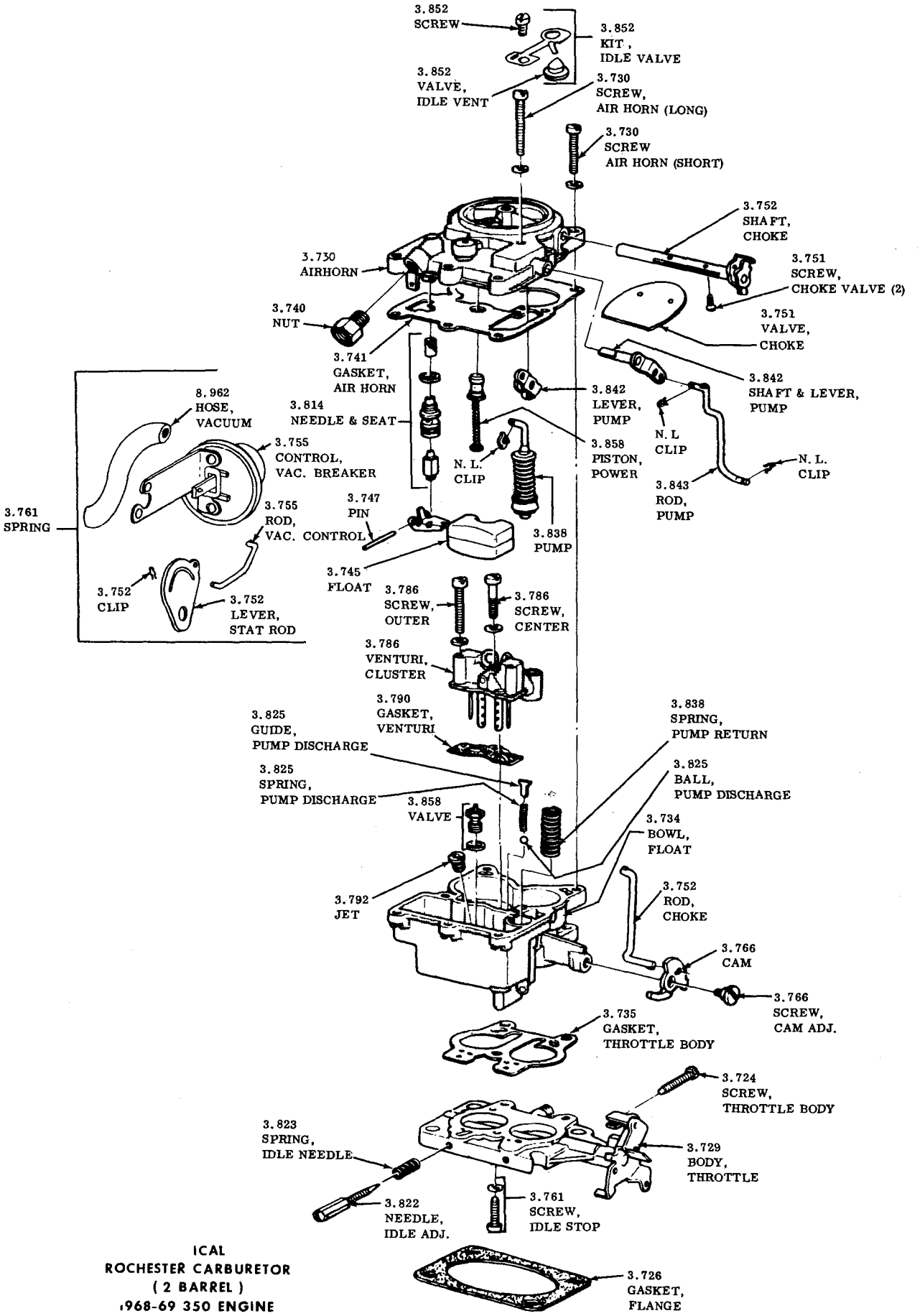

ICAL
ROCHESTER CARBURETOR
(2 BARREL)
1968-69 350 ENGINE

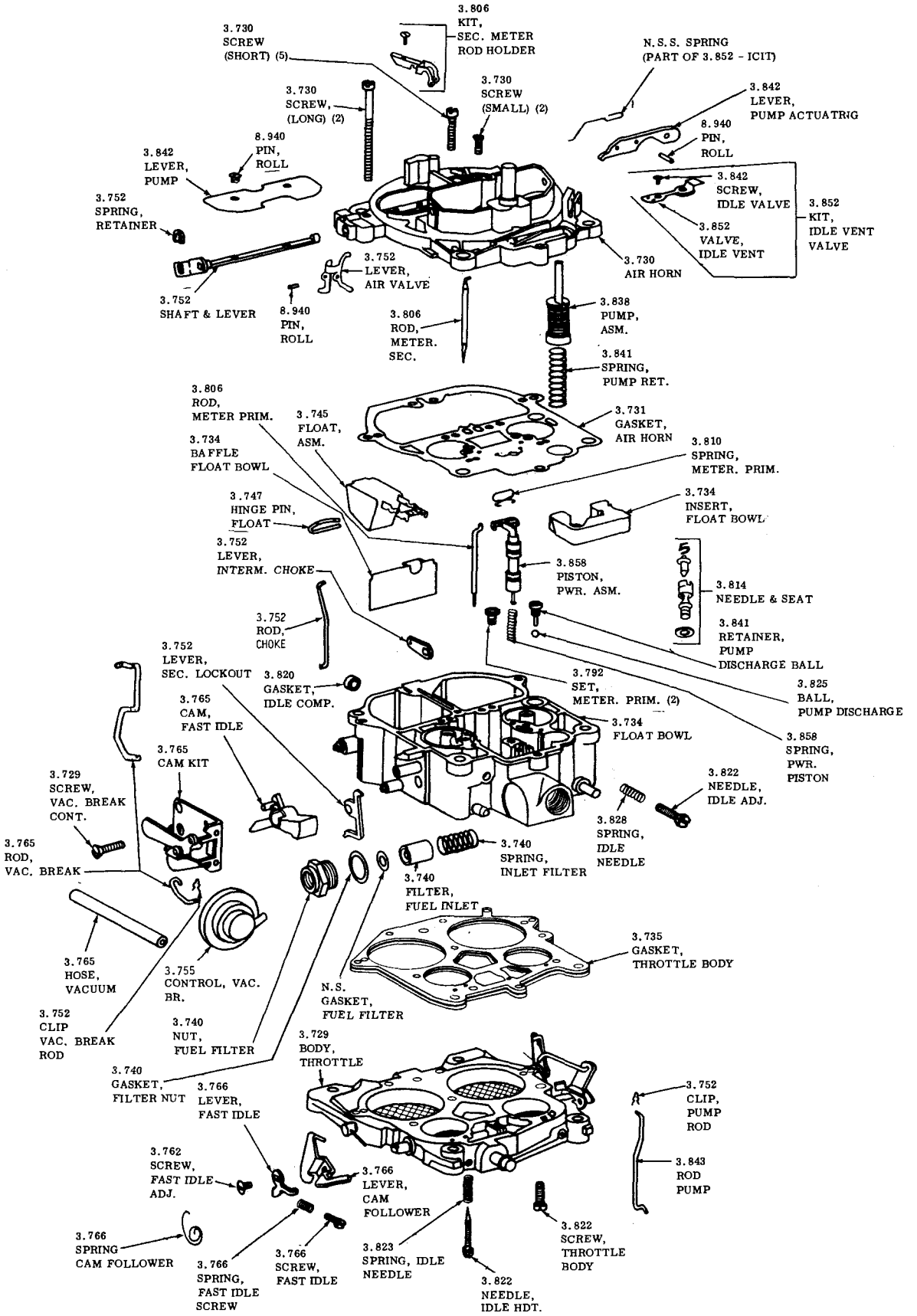

TYPICAL
ROCHESTER CARBURETOR
(4 BARREL)
1968-69-350-400-430 ENGINES

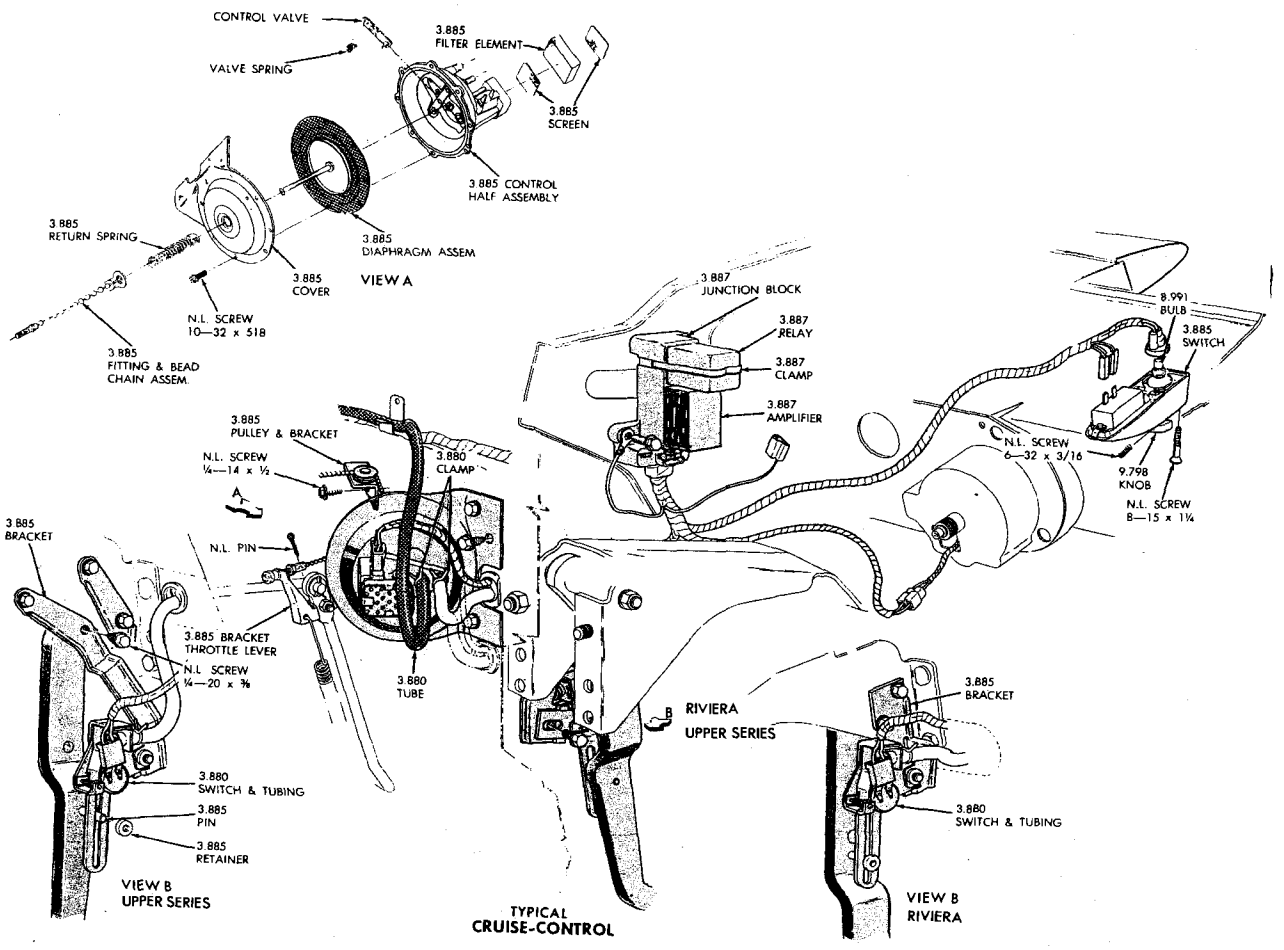
CONTROL VALVE
VALVE SPRING
3.885 FILTER ELEMENT
3.885 SCREEN
3.885 CONTROL HALF ASSEMBLY
3.885 DIAPHRAGM ASSEM
3.885 RETURN SPRING
3.885 COVER
VIEW A
N.L. SCREW 10—32 x 518
3.885 FITTING & BEAD CHAIN ASSEM.
3.887 JUNCTION BLOCK
3.887 RELAY
3.887 CLAMP
3.887 AMPLIFIER
8.991 BULB
3.885 SWITCH
N.L. SCREW 6—32 x 3/16
9.798 KNOB
N.L. SCREW 8—15 x 1¼
3.885 PULLEY & BRACKET
N.L. SCREW ¼—14 x ½
3.880 CLAMP
A
3.885 BRACKET
N.L. PIN
3.885 BRACKET THROTTLE LEVER
N.L SCREW ¼—20 x ⅜
3.880 TUBE
RIVIERA
UPPER SERIES
3.885 BRACKET
3.880 SWITCH & TUBING
3.885 PIN
3.885 RETAINER
VIEW B UPPER SERIES
TYPICAL CRUISE-CONTROL
3.880 SWITCH & TUBING
VIEW B RIVIERA

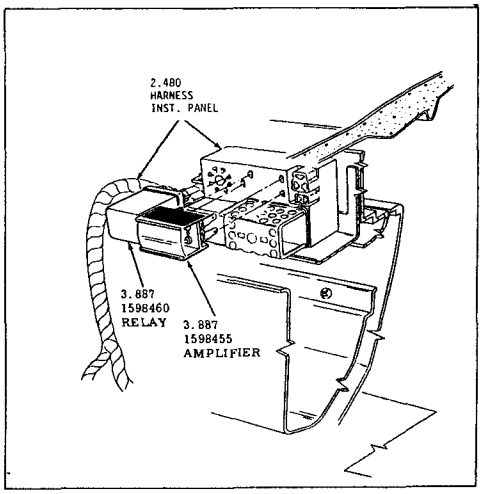

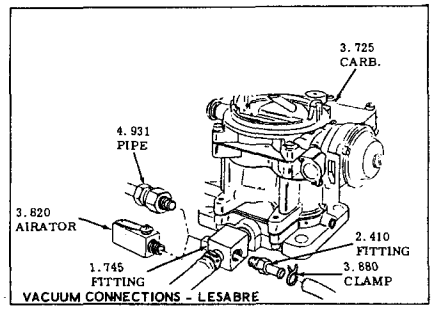

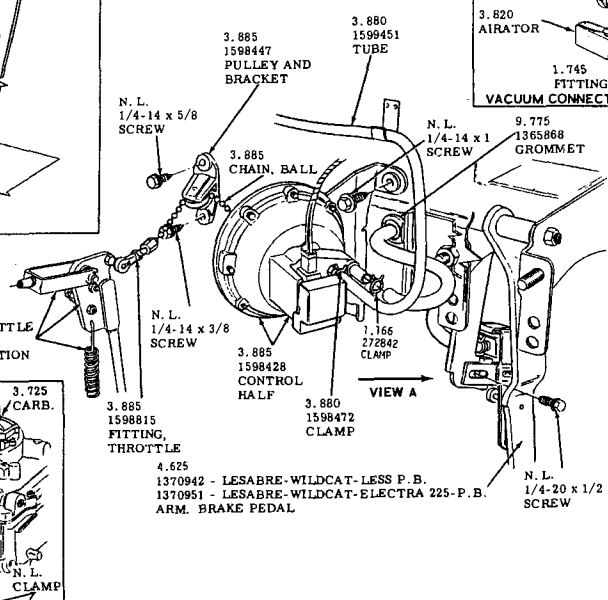

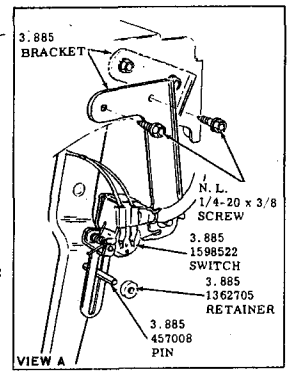

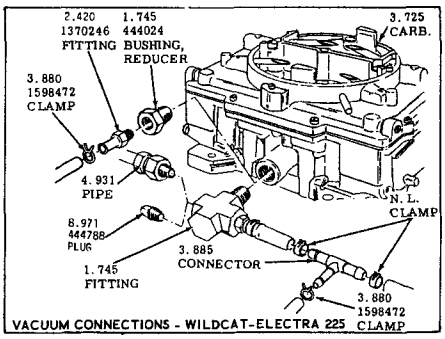

CRUISE CONTROL
1965 - LESABRE-WILDCAT-ELECTRA 225

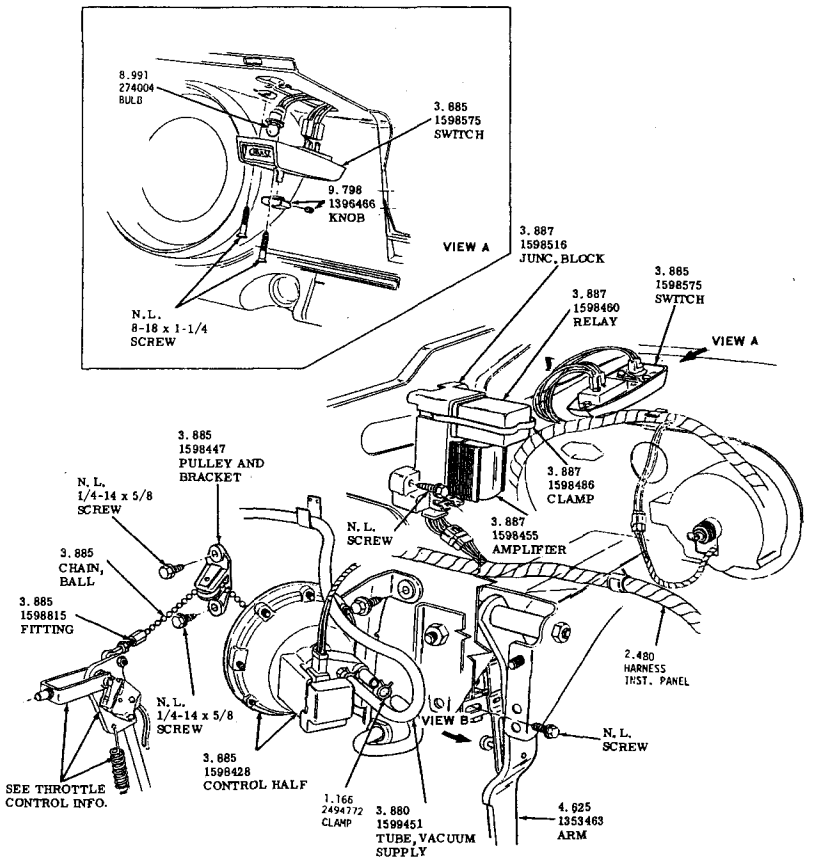

CRUISE CONTROL
1965-RIVIERA

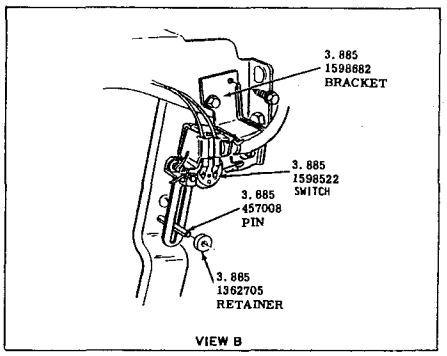

VIEW B

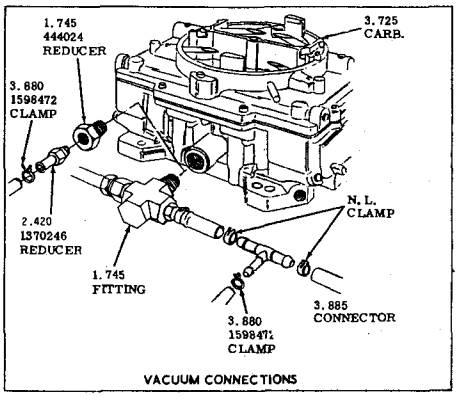

VACUUM CONNECTIONS

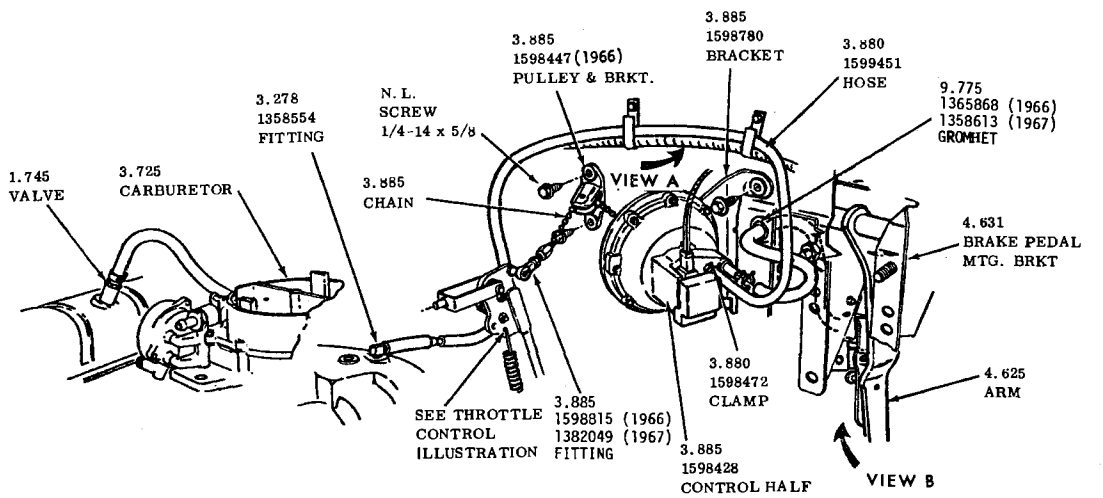

LESABRE—WILDCAT—ELECTRA 225

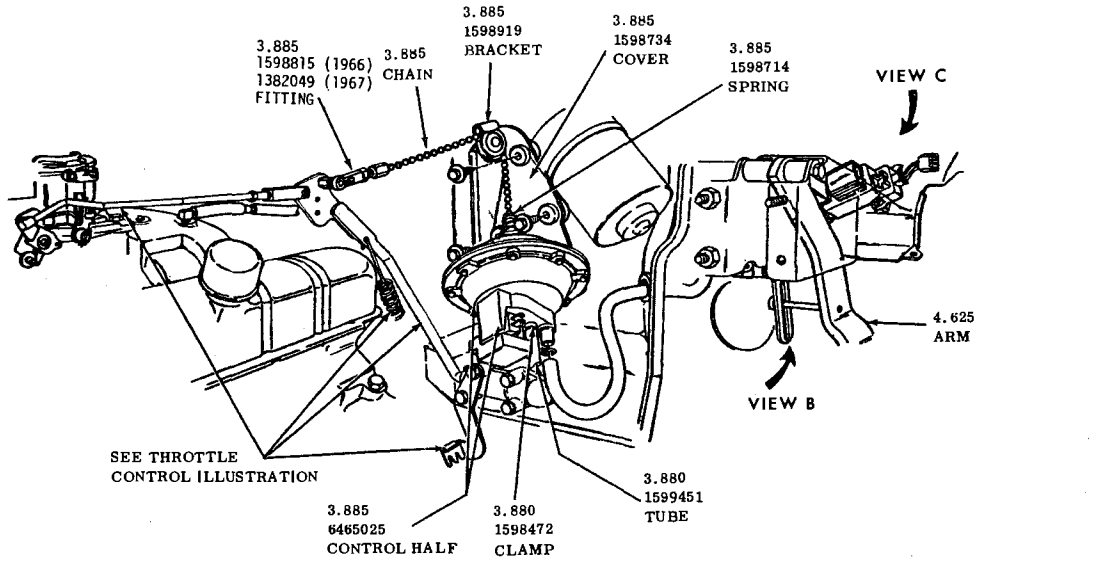

RIVIERA

VIEW A

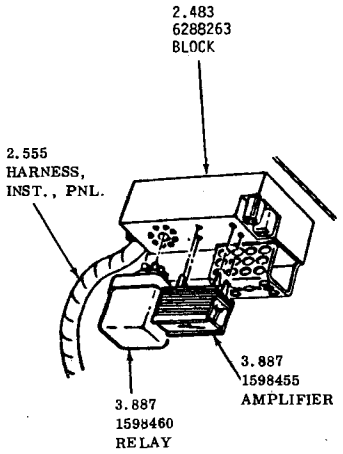

LESABRE —WILDCAT—ELECTRA 225

VIEW B

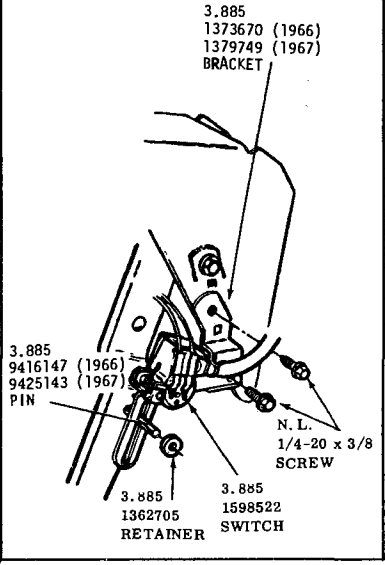

VIEW C

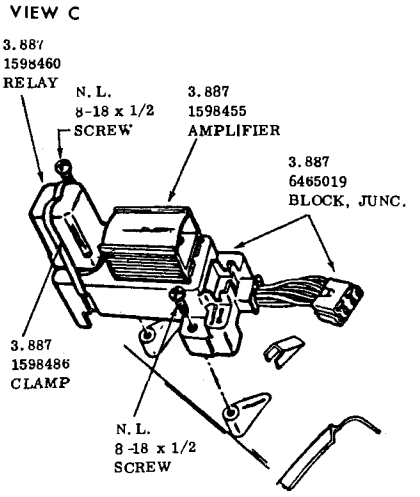

RIVIERA

1966 CRUISE CONTROL

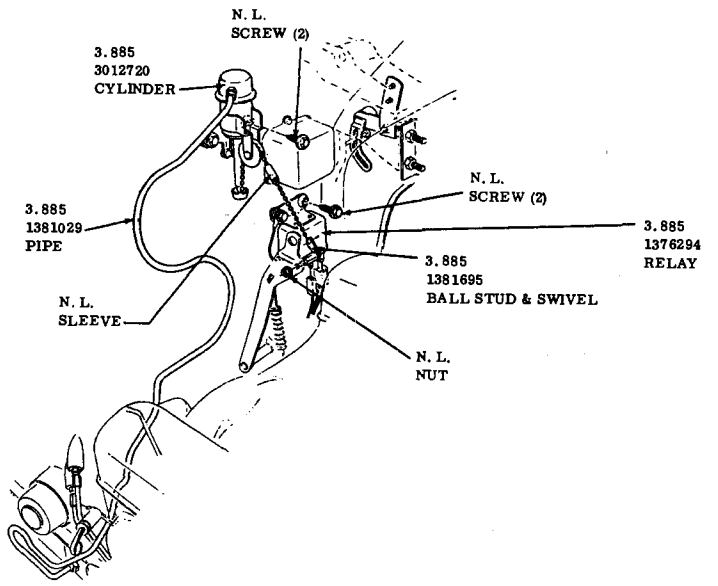

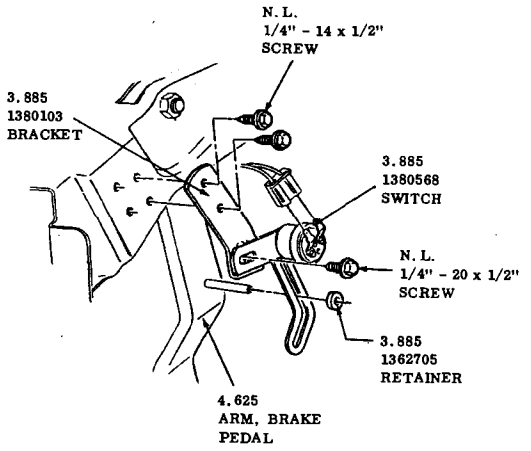

SPECIAL—SKYLARK

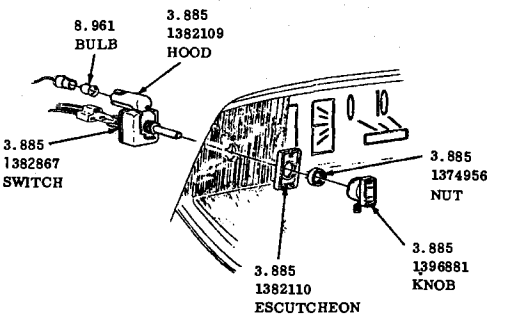

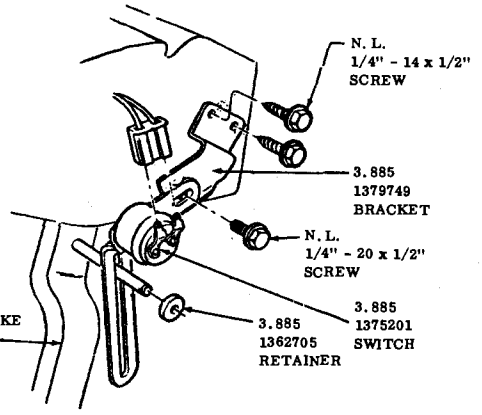

LESABRE

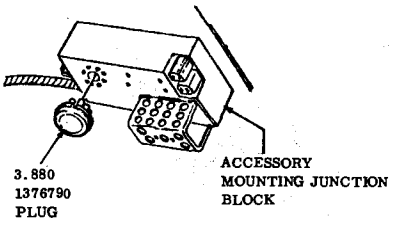

HYDRAULIC CRUISE CONTROL
1967—S.T. 300

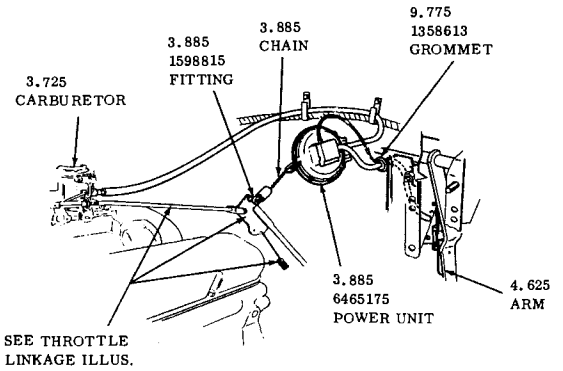

LESABRE—WILDCAT—ELECTRA 225

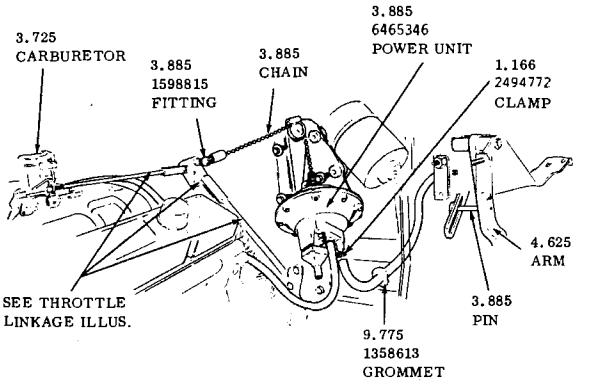

RIVIERA

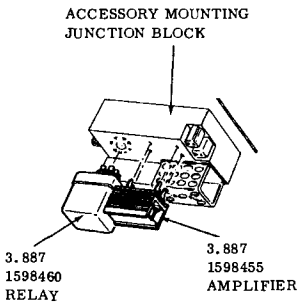

LESABRE—WILDCAT—ELECTRA 225

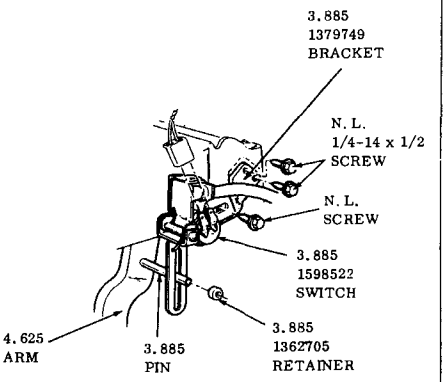

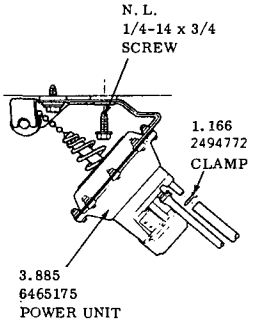

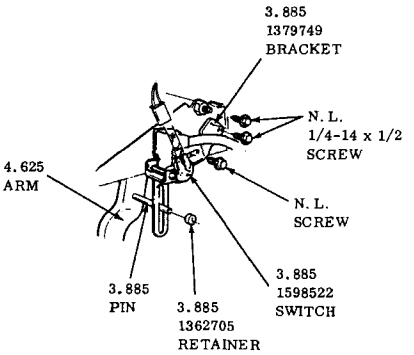

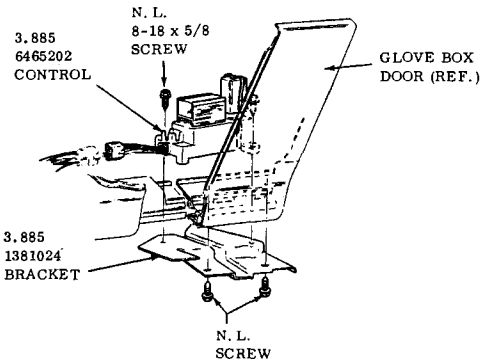

RIVIERA

CRUISE CONTROL

1967—LESABRE—WILDCAT—ELECTRA 225—RIVIERA

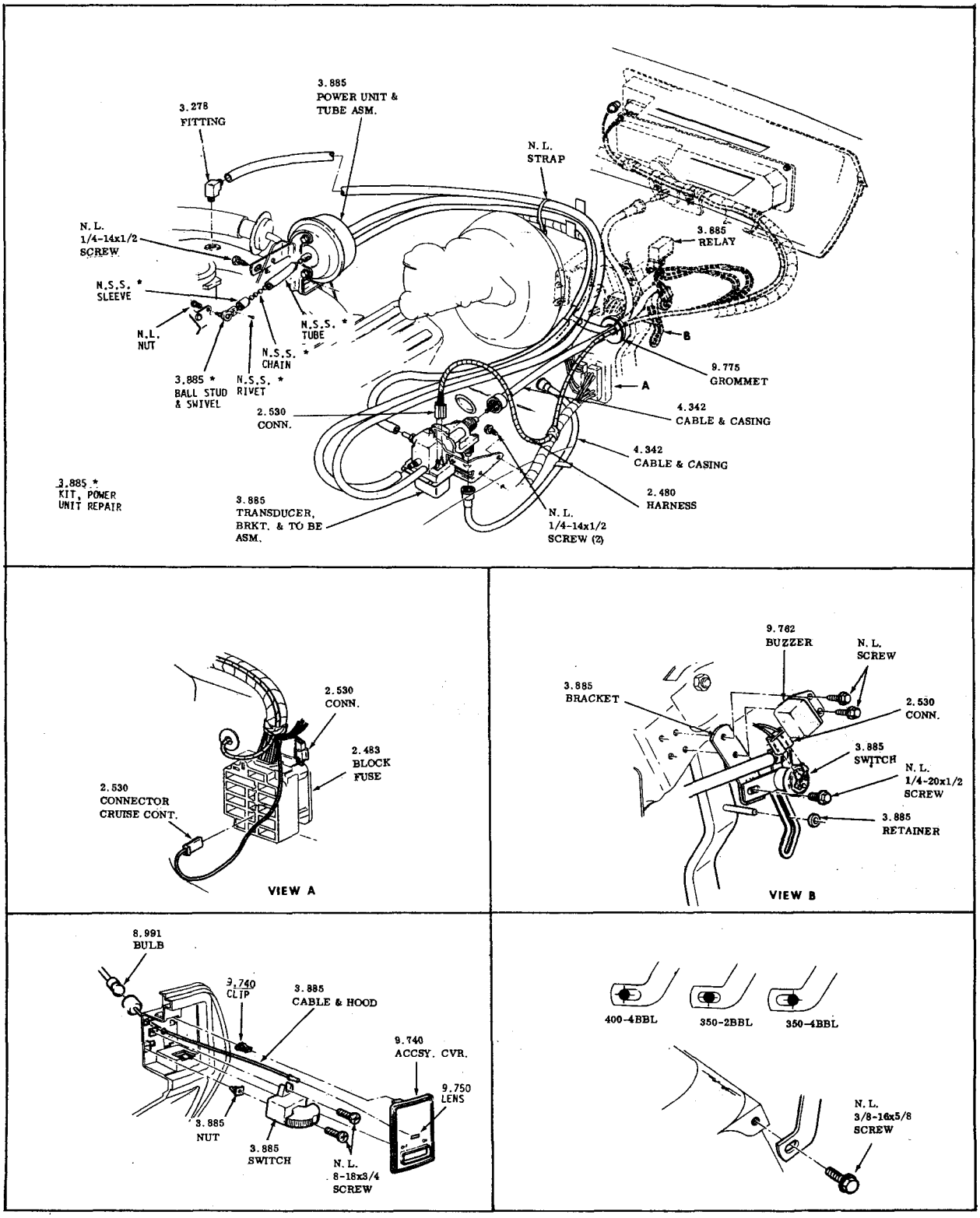

CRUISE MASTER

1968-1969 - 30-4000

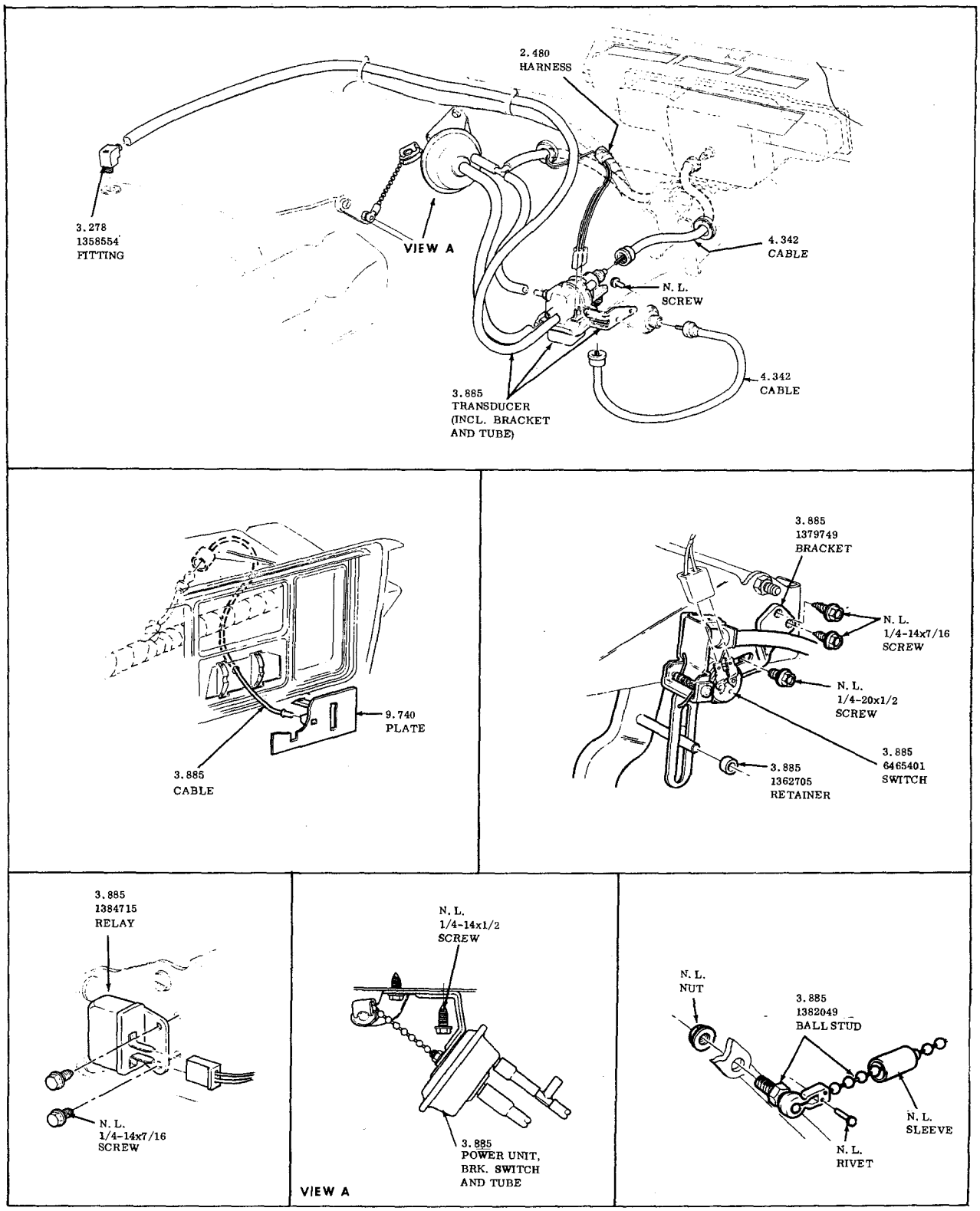

CRUISE CONTROL
1968 - 50-60-8000

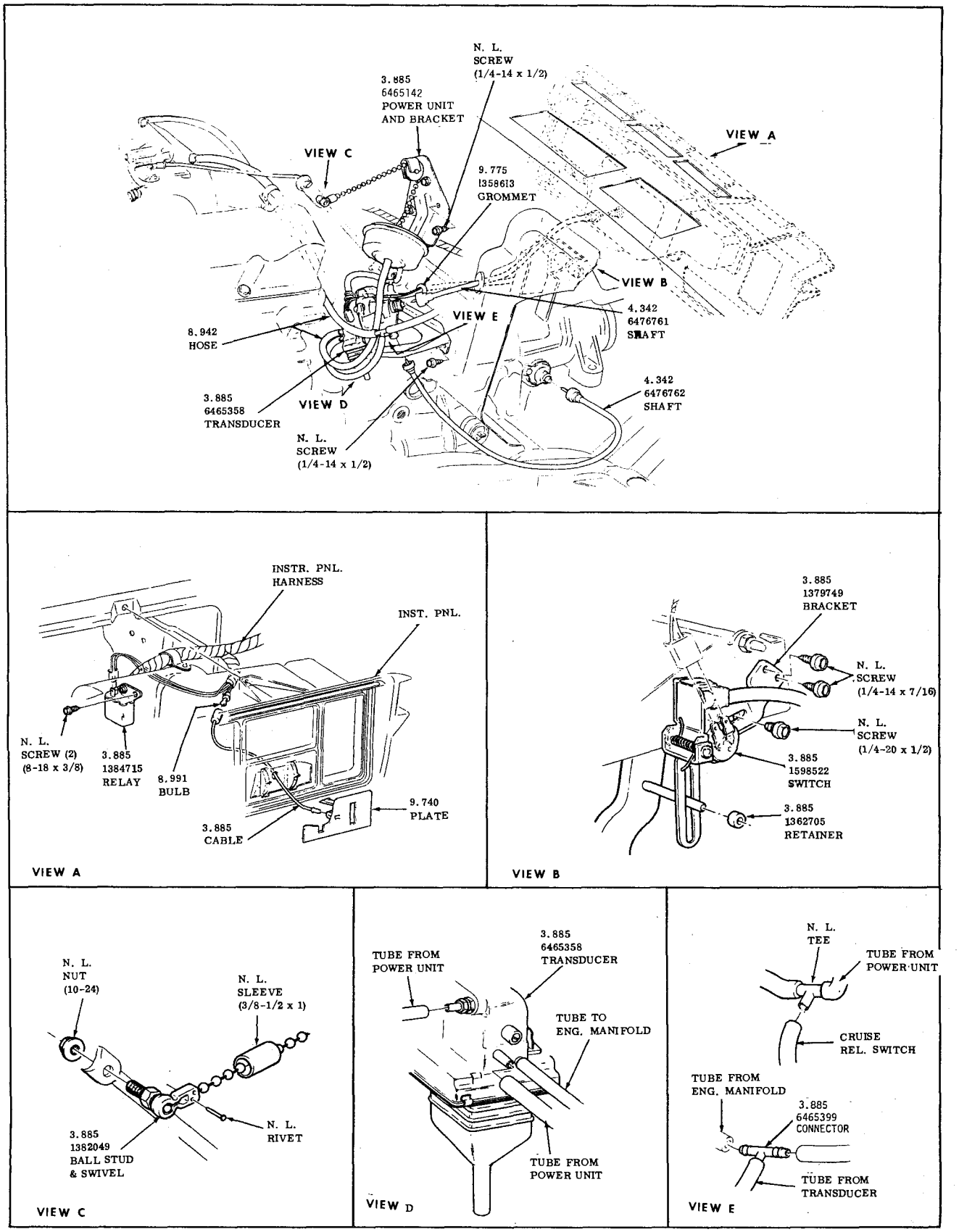

CRUISE CONTROL

1968 RIVIERA

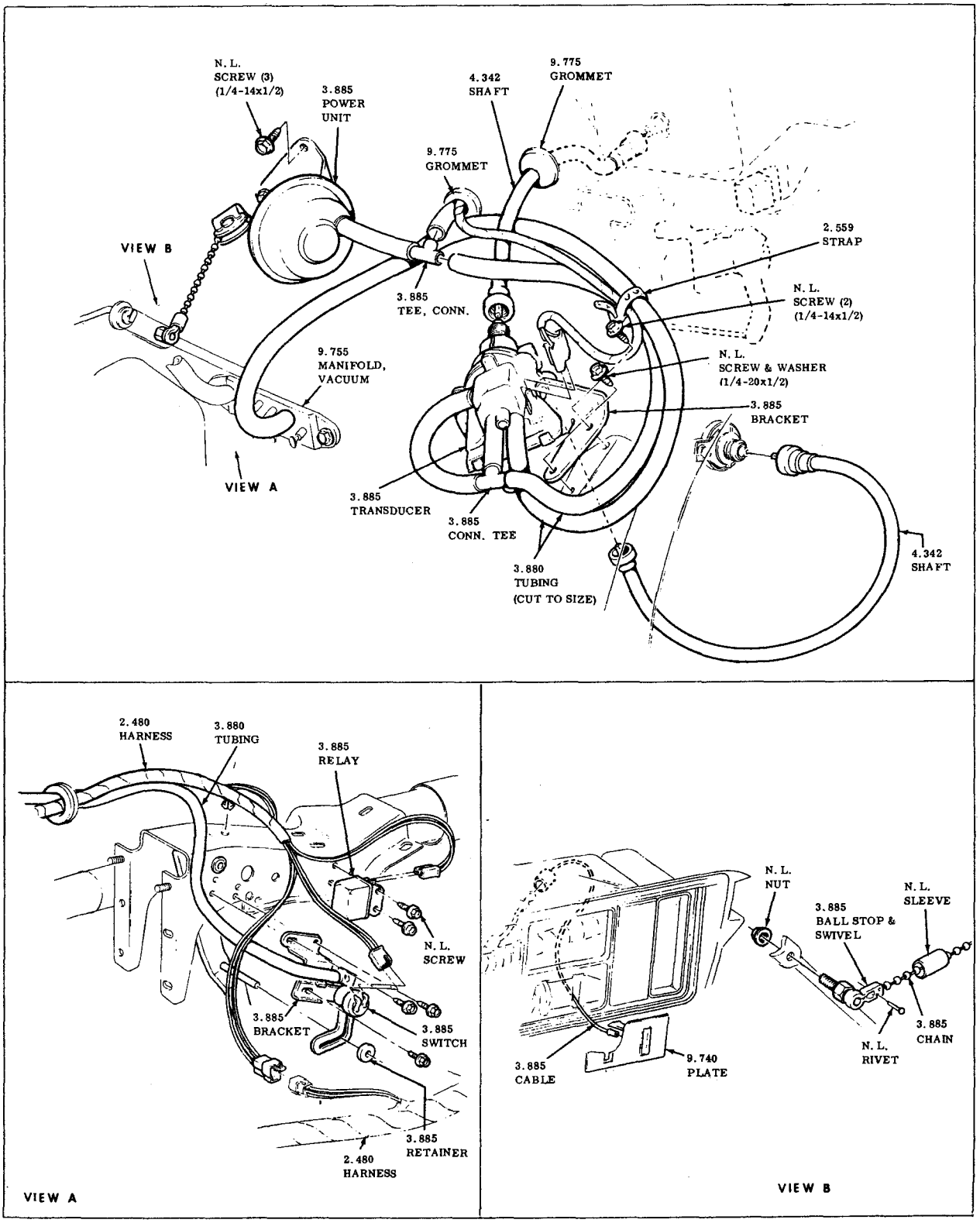

CRUISE MASTER
1969-50-60-8000

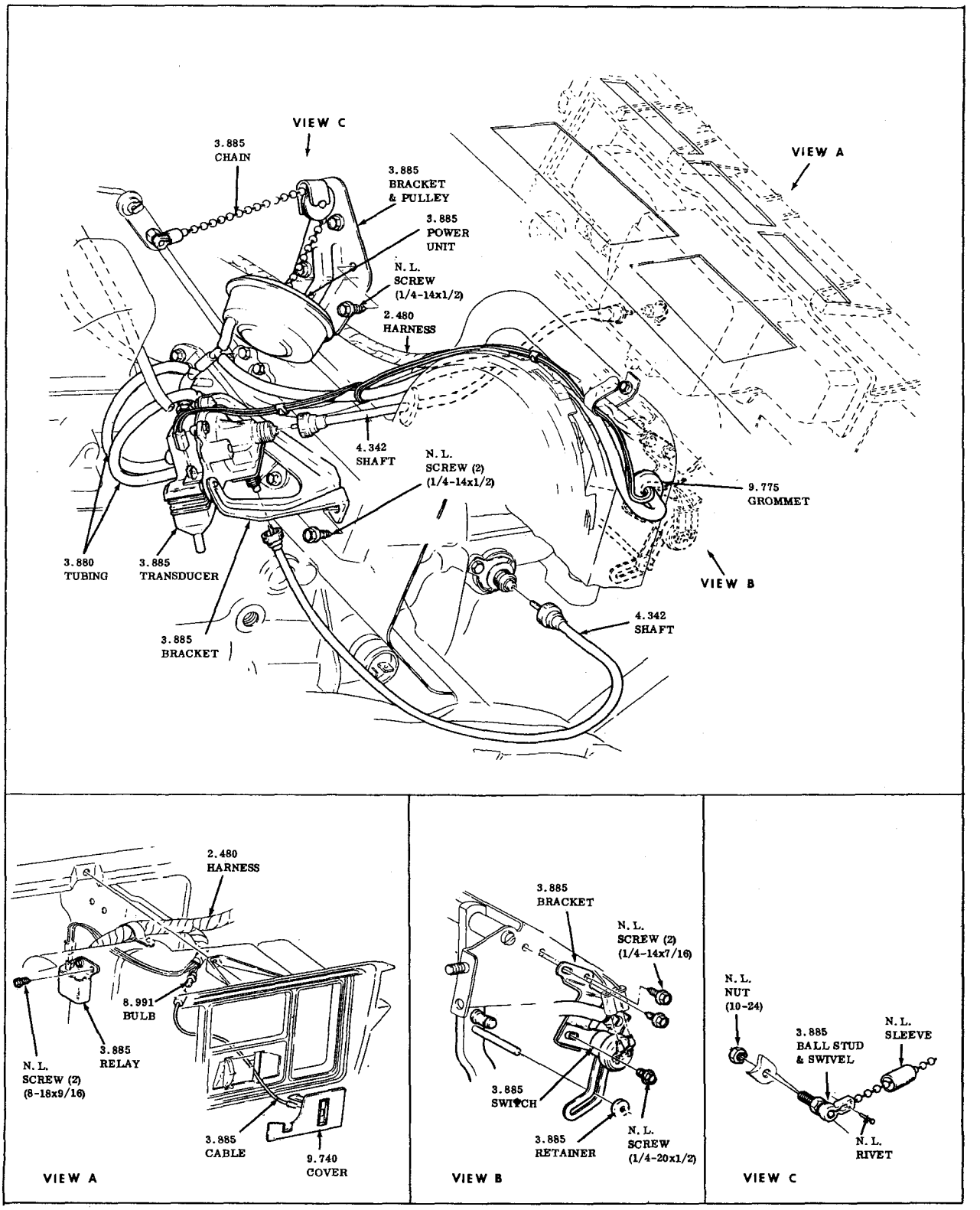

CRUISE MASTER
1969-9000

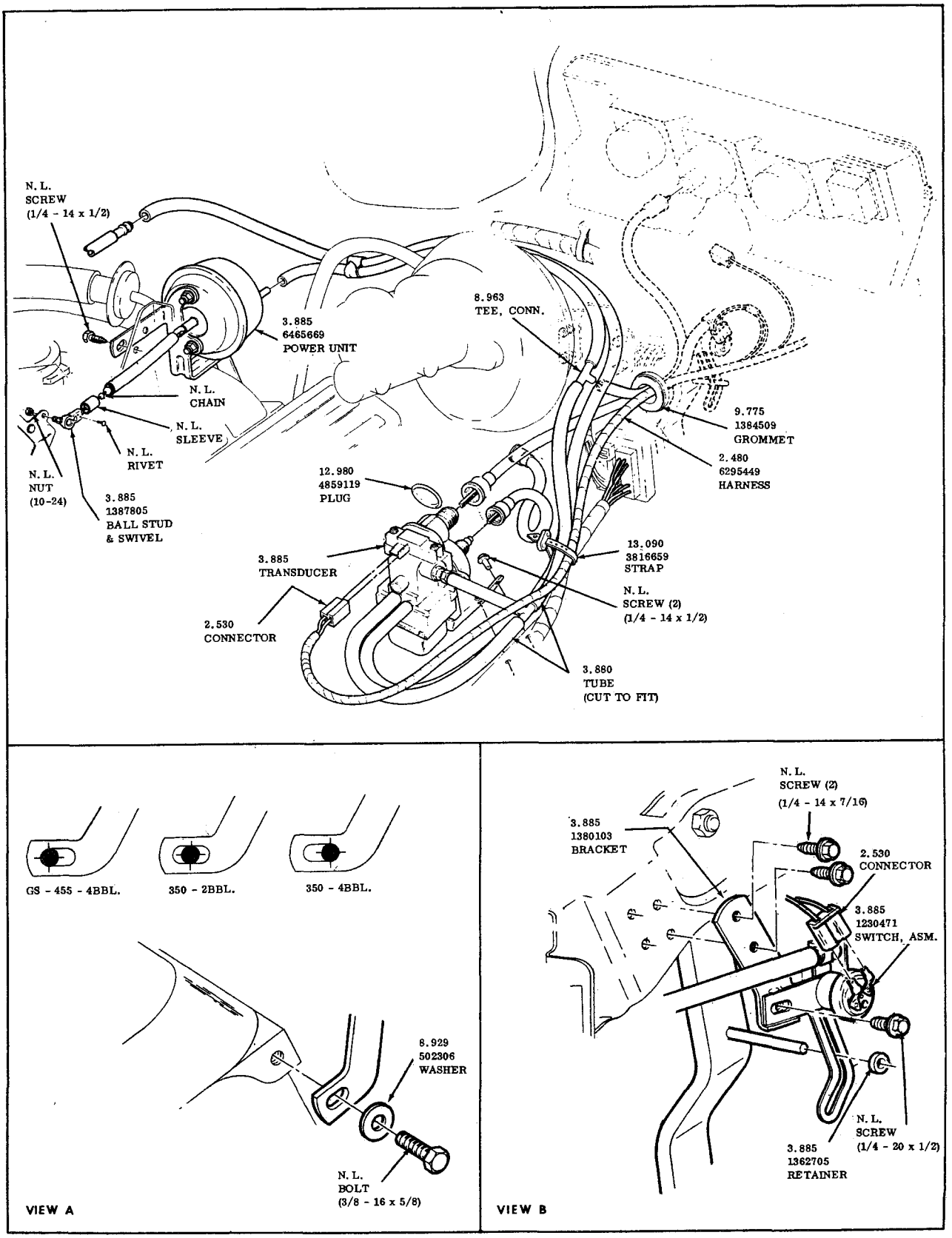

CRUISE MASTER

1970-30-4000

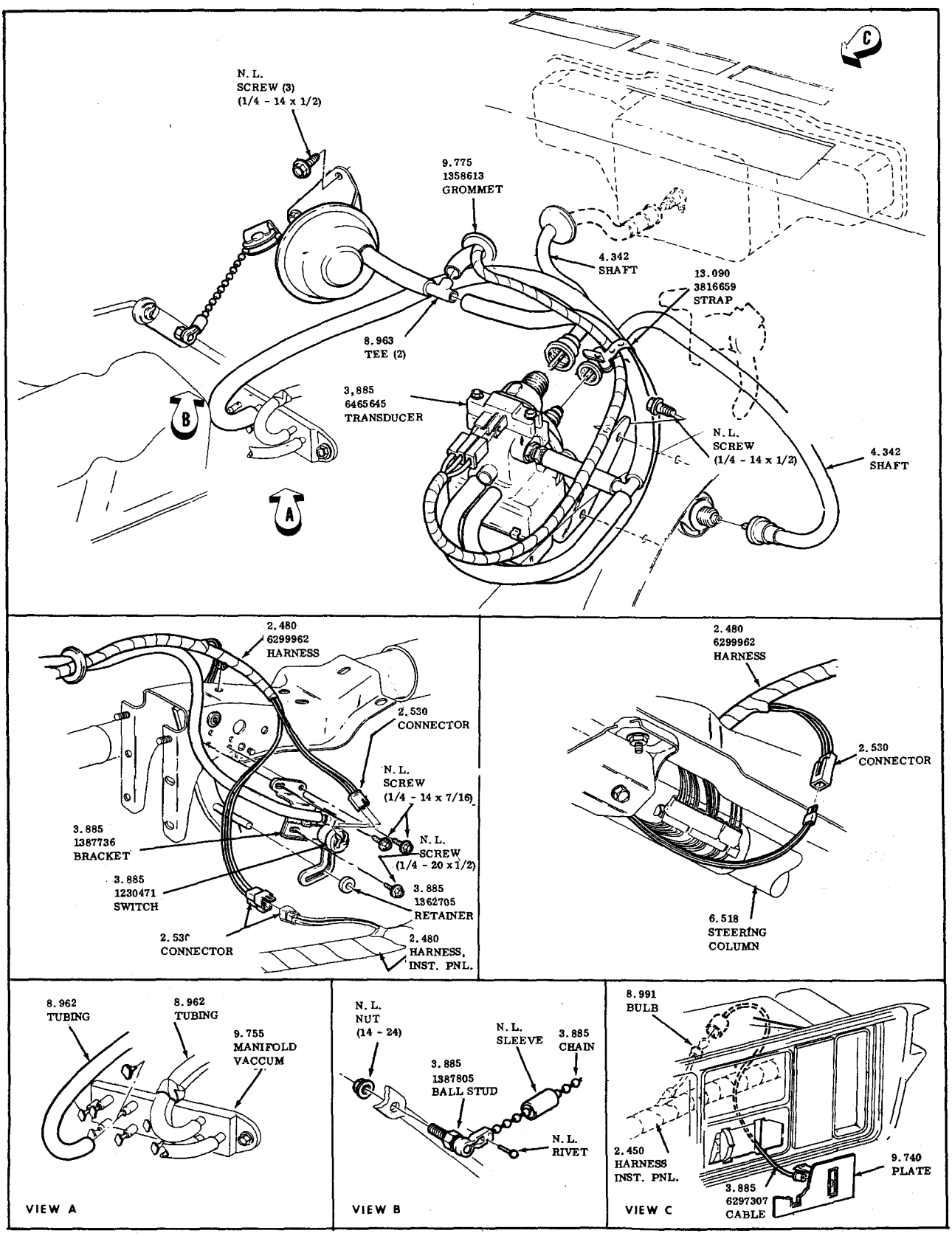

CRUISE MASTER

1970-50-60-8000

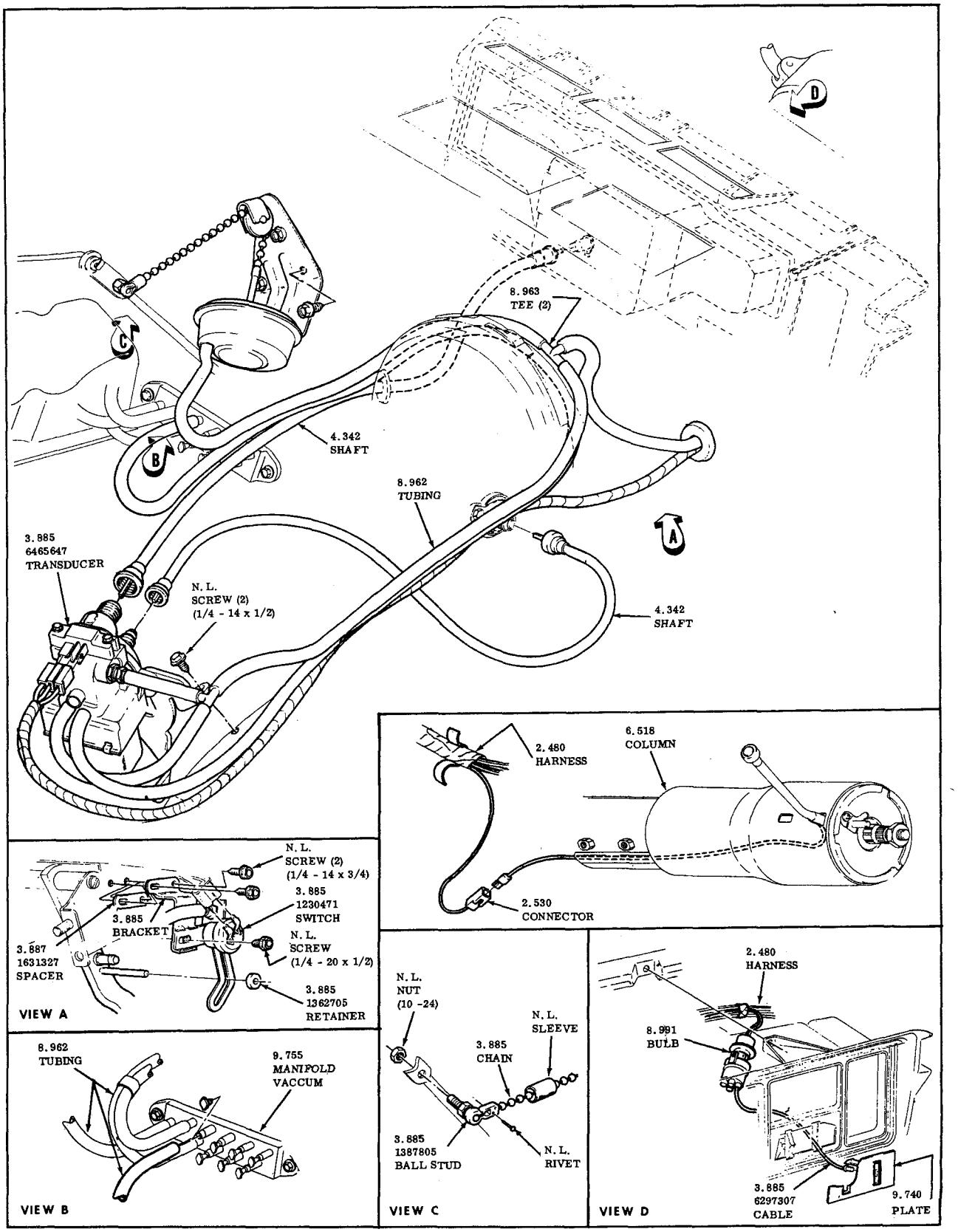

CRUISE MASTER
1970-9000

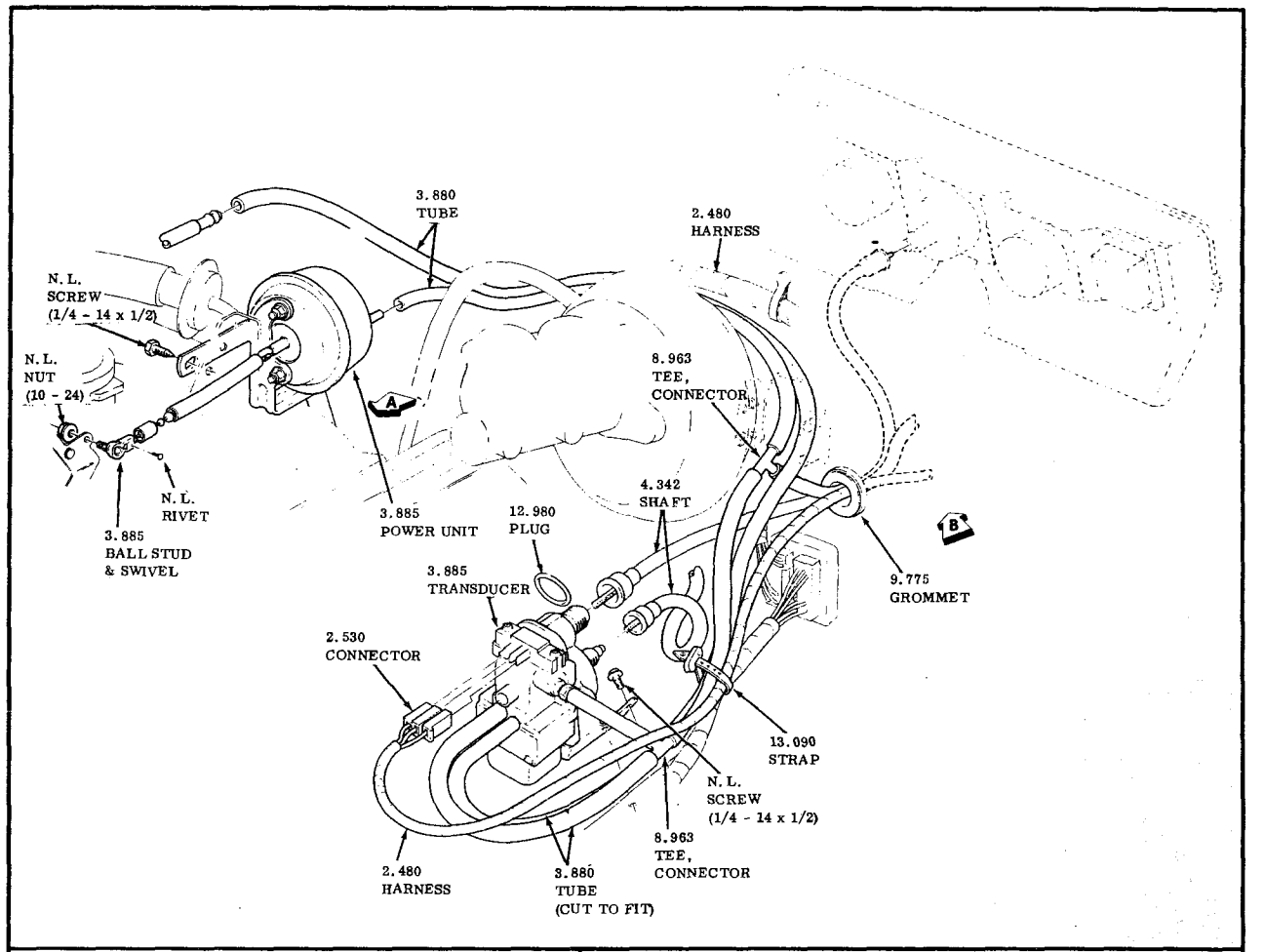

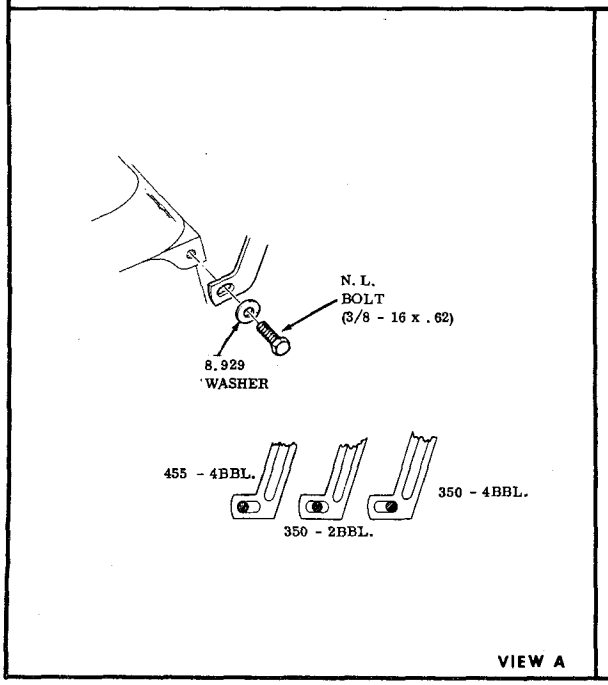

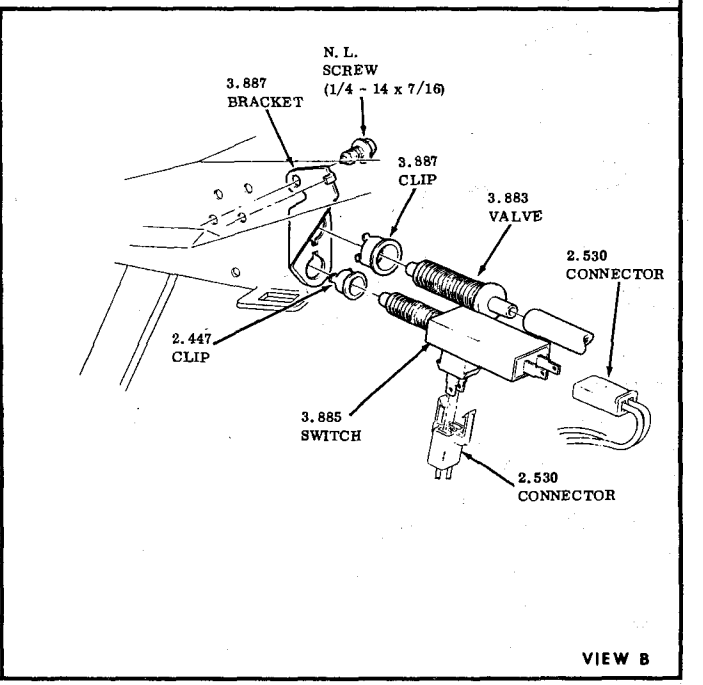

CRUISE MASTER
1971-1972 30-4000

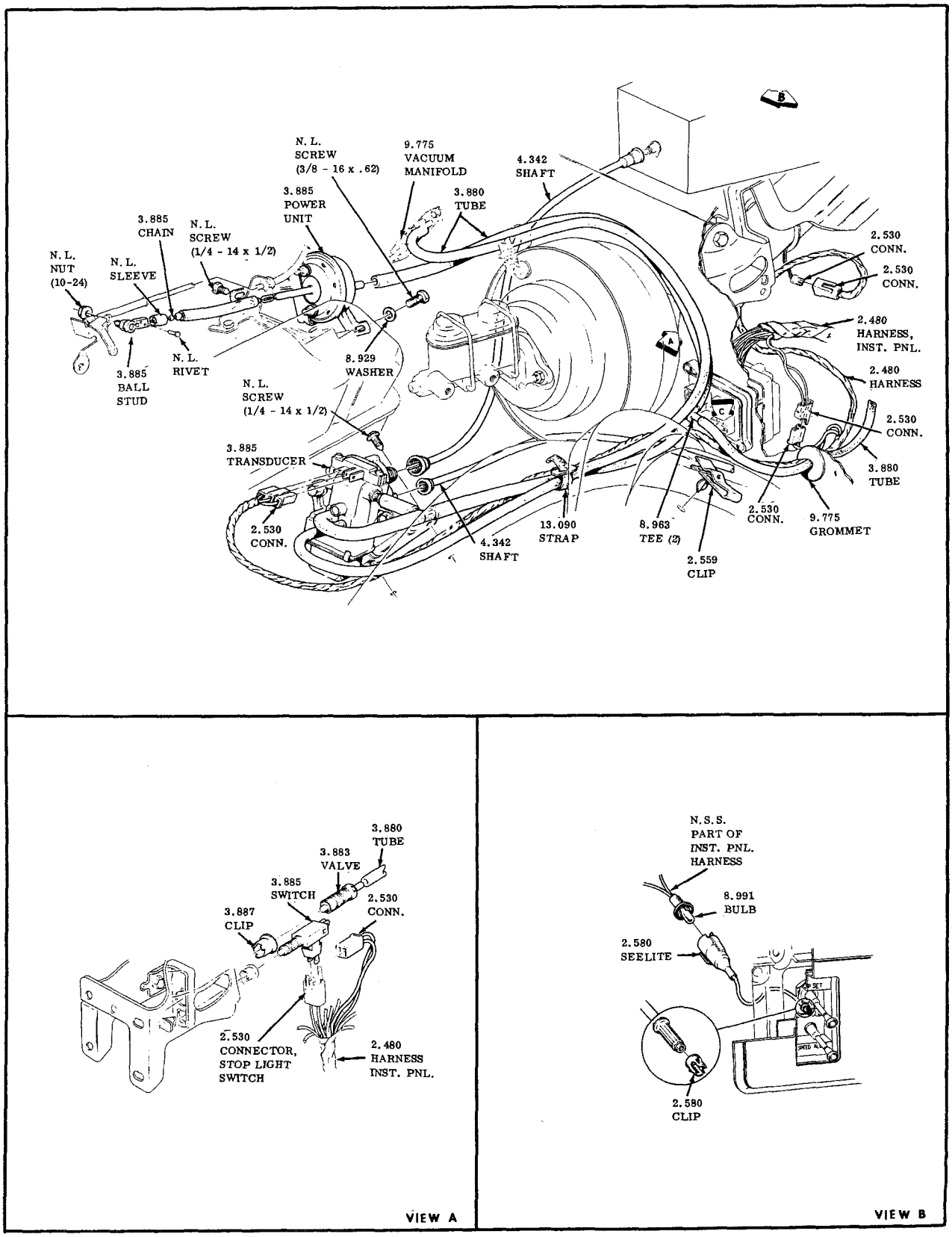

CRUISE MASTER
1971-1972 50-60-80-9000

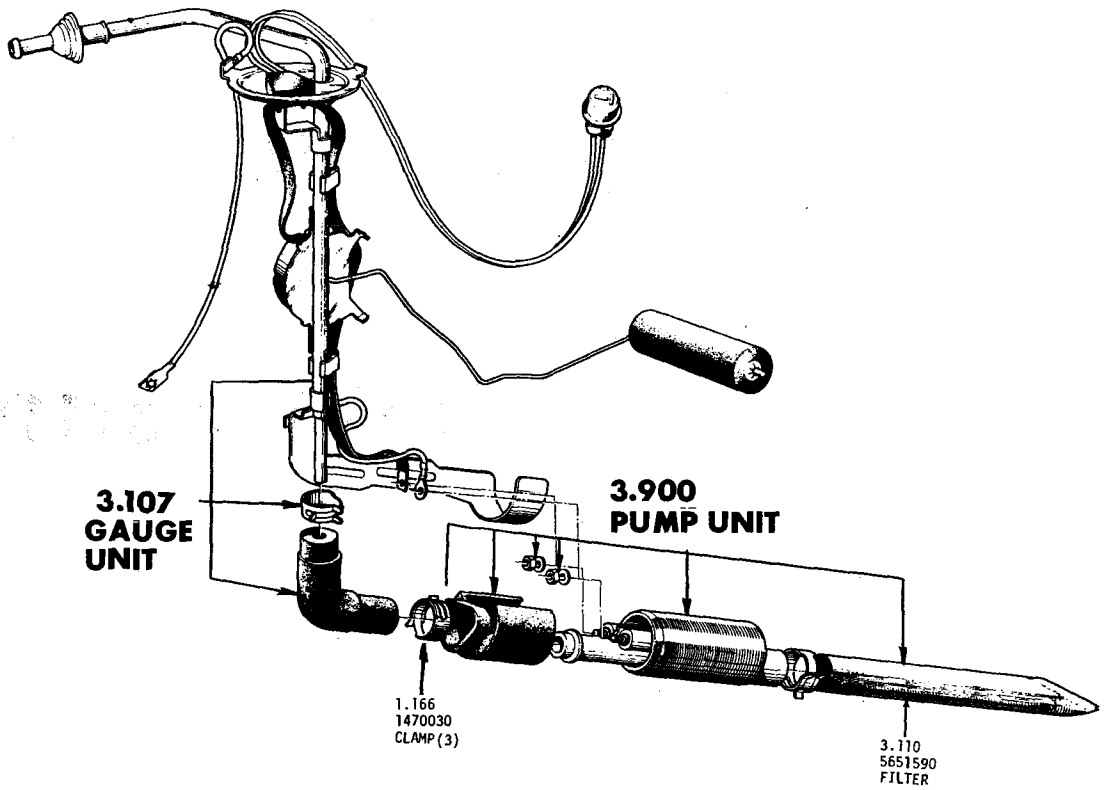

ELECTRIC FUEL PUMP AND GAUGE
1969-RIVIERA

GROUP 4

TRANSMISSION—BRAKE CONTROL

MEMORANDA

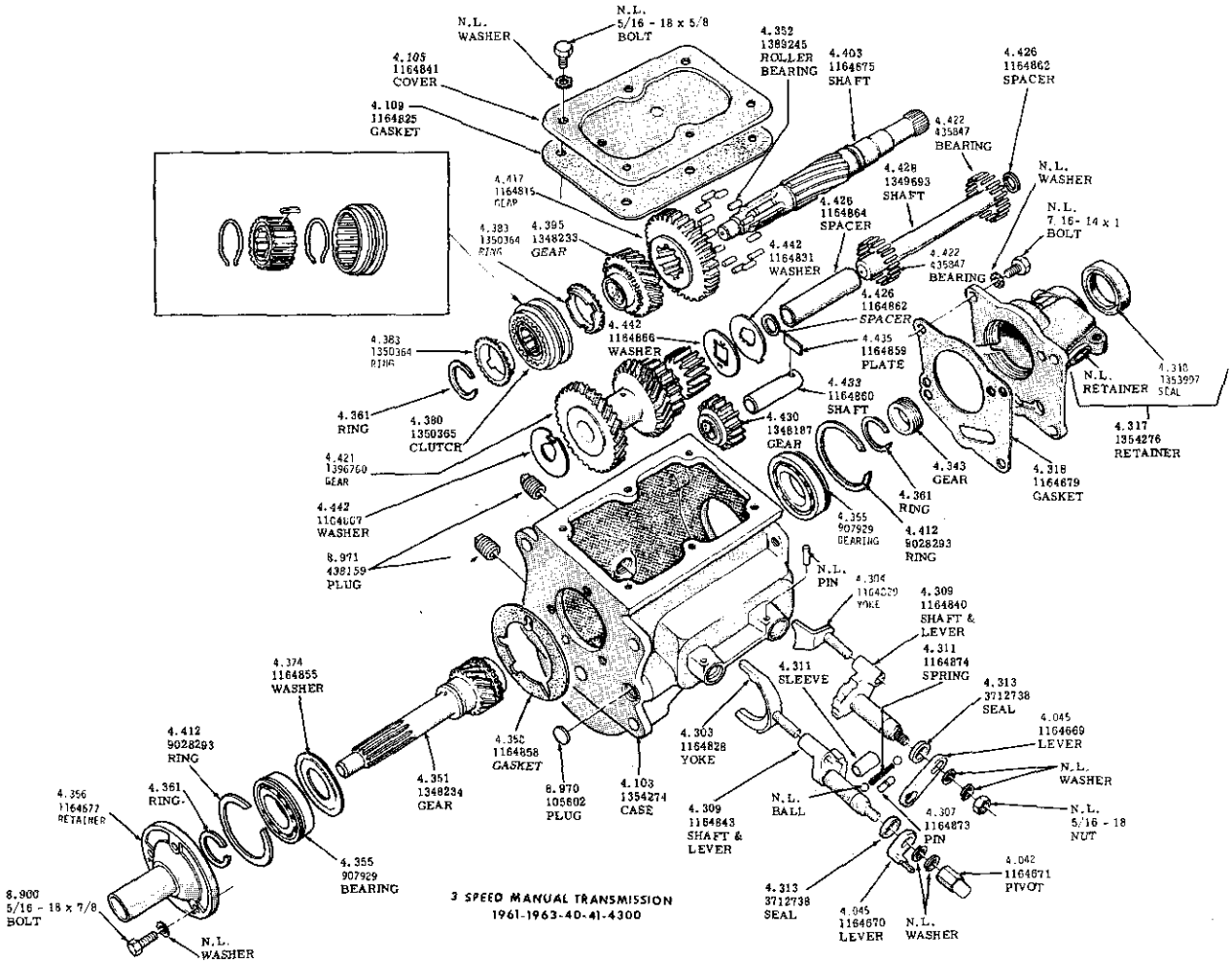
N.L. WASHER
N.L. 5/16 - 18 x 5/8 BOLT
4.105 1164841 COVER
4.109 1164825 GASKET
4.352 1389245 ROLLER BEARING
4.403 1164875 SHAFT
4.426 1164862 SPACER
4.422 435847 BEARING
4.428 1349693 SHAFT
N.L. WASHER
N.L. 7/16 - 14 x 1 BOLT
4.417 1164815 GEAR
4.383 1350364 RING
4.395 1348233 GEAR
4.426 1164864 SPACER
4.442 1164831 WASHER
4.422 435847 BEARING
4.426 1164862 SPACER
4.442 1164866 WASHER
4.435 1164859 PLATE
4.383 1350364 RING
4.433 1164860 SHAFT
4.361 RING
4.380 1350365 CLUTCH
4.430 1348187 GEAR
N.L. RETAINER
4.310 1363997 SEAL
4.317 1354276 RETAINER
4.421 1396760 GEAR
4.343 GEAR
4.318 1164679 GASKET
4.361 RING
4.442 1164867 WASHER
4.355 907929 BEARING
4.412 9028293 RING
8.971 438159 PLUG
N.L. PIN
4.309 1164840 SHAFT & LEVER
4.311 1164874 SPRING
4.374 1164855 WASHER
4.311 SLEEVE
4.313 3712738 SEAL
4.045 1164669 LEVER
4.412 9028293 RING
4.303 1164828 YOKE
N.L. WASHER
4.356 1164858 GASKET
4.361 RING
4.351 1348234 GEAR
8.970 105602 PLUG
4.103 1354274 CASE
N.L. BALL
N.L. 5/16 - 18 NUT
4.356 1164677 RETAINER
4.309 1164843 SHAFT & LEVER
4.307 1164873 PIN
4.355 907929 BEARING
4.042 1164671 PIVOT
8.900 5/16 - 18 x 7/8 BOLT
4.313 3712738 SEAL
4.045 1164670 LEVER
N.L. WASHER
N.L. WASHER
3 SPEED MANUAL TRANSMISSION
1961-1963-40-41-4300

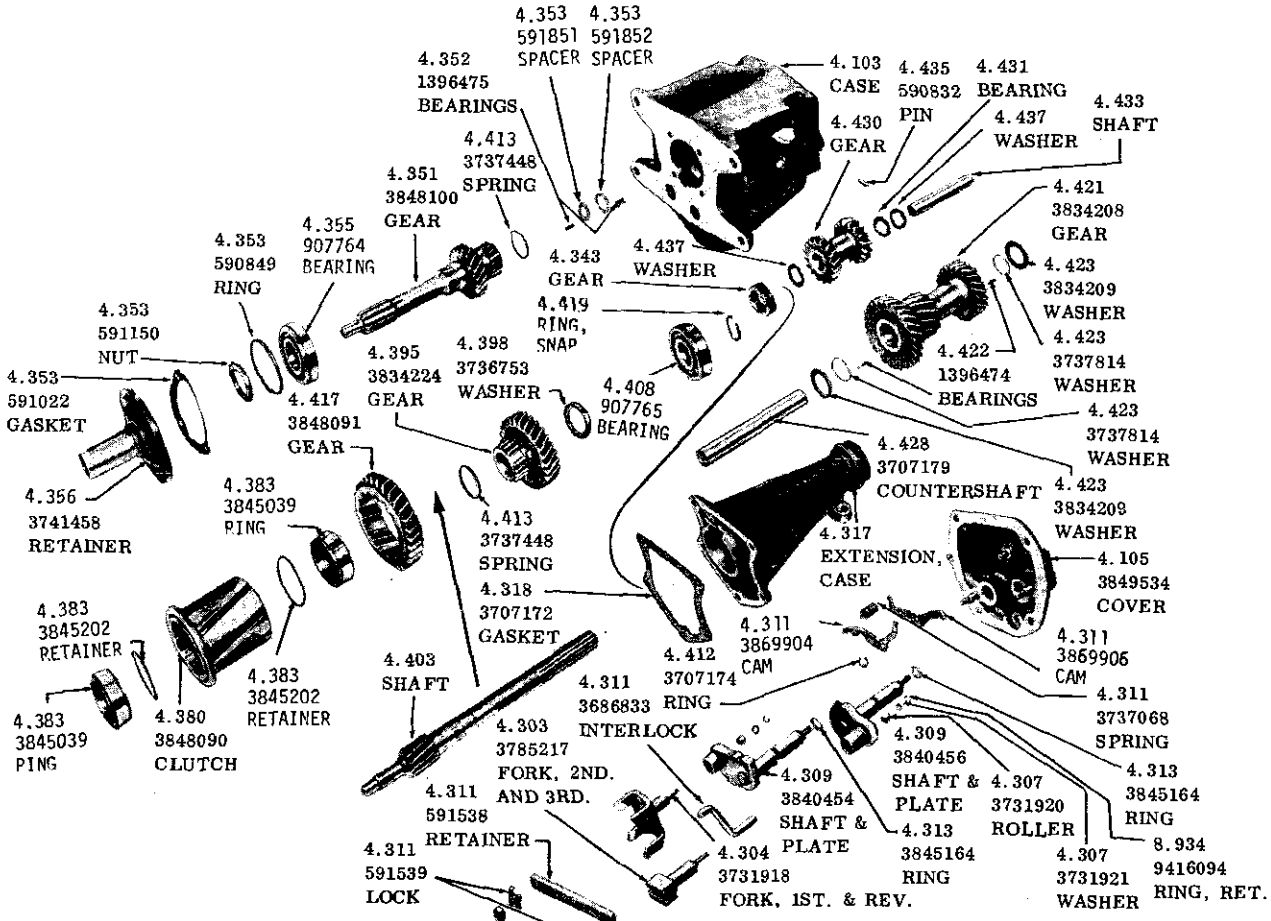

3 SPEED TRANSMISSION
1964-1965 - SPECIAL - SKYLARK
LESABRE

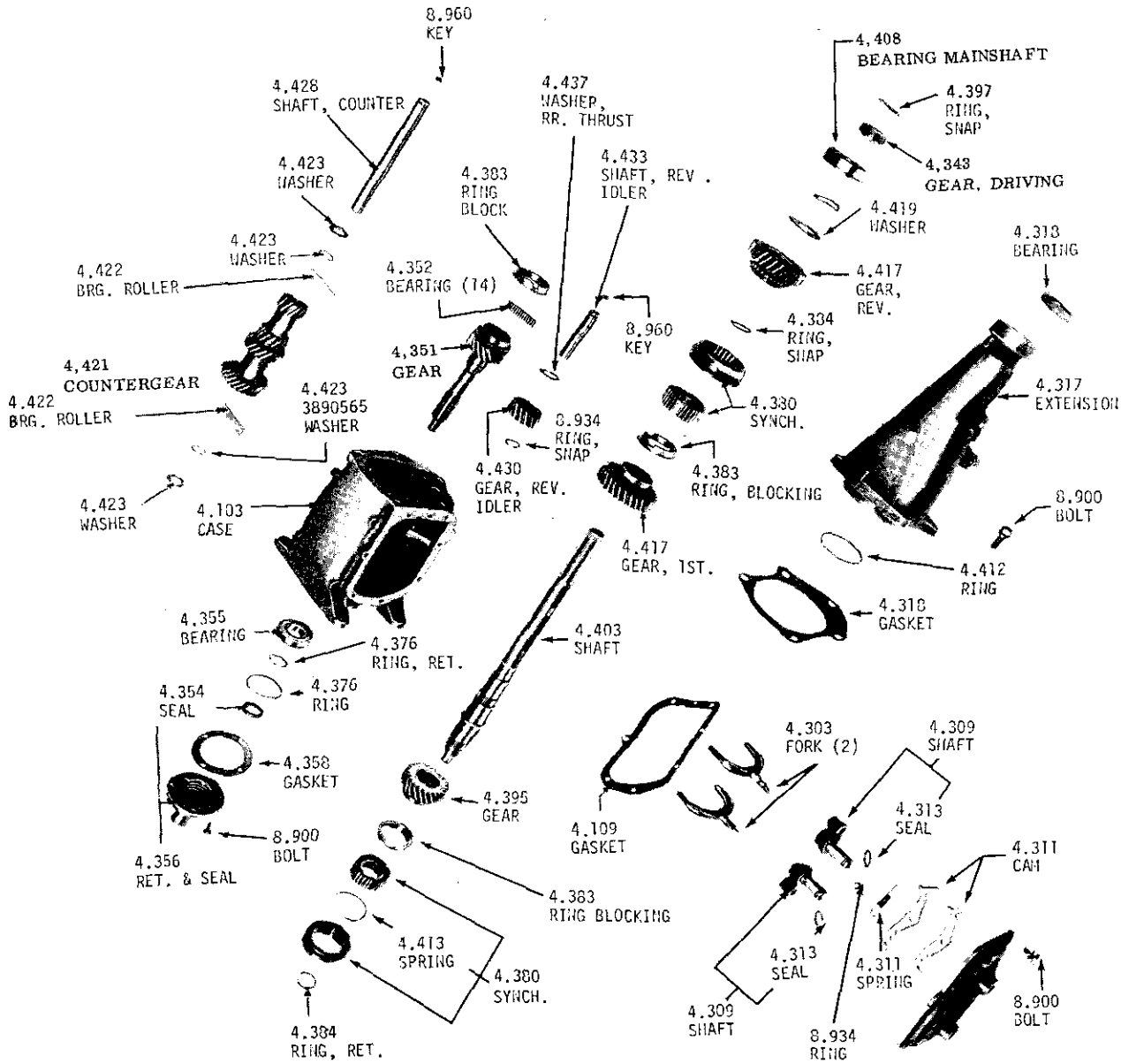

3—SPEED MANUAL TRANSMISSION
1966-1970 —SPECIAL—SKYLARK—LESABRE
1966-1972-SPECIAL-SKYLARK

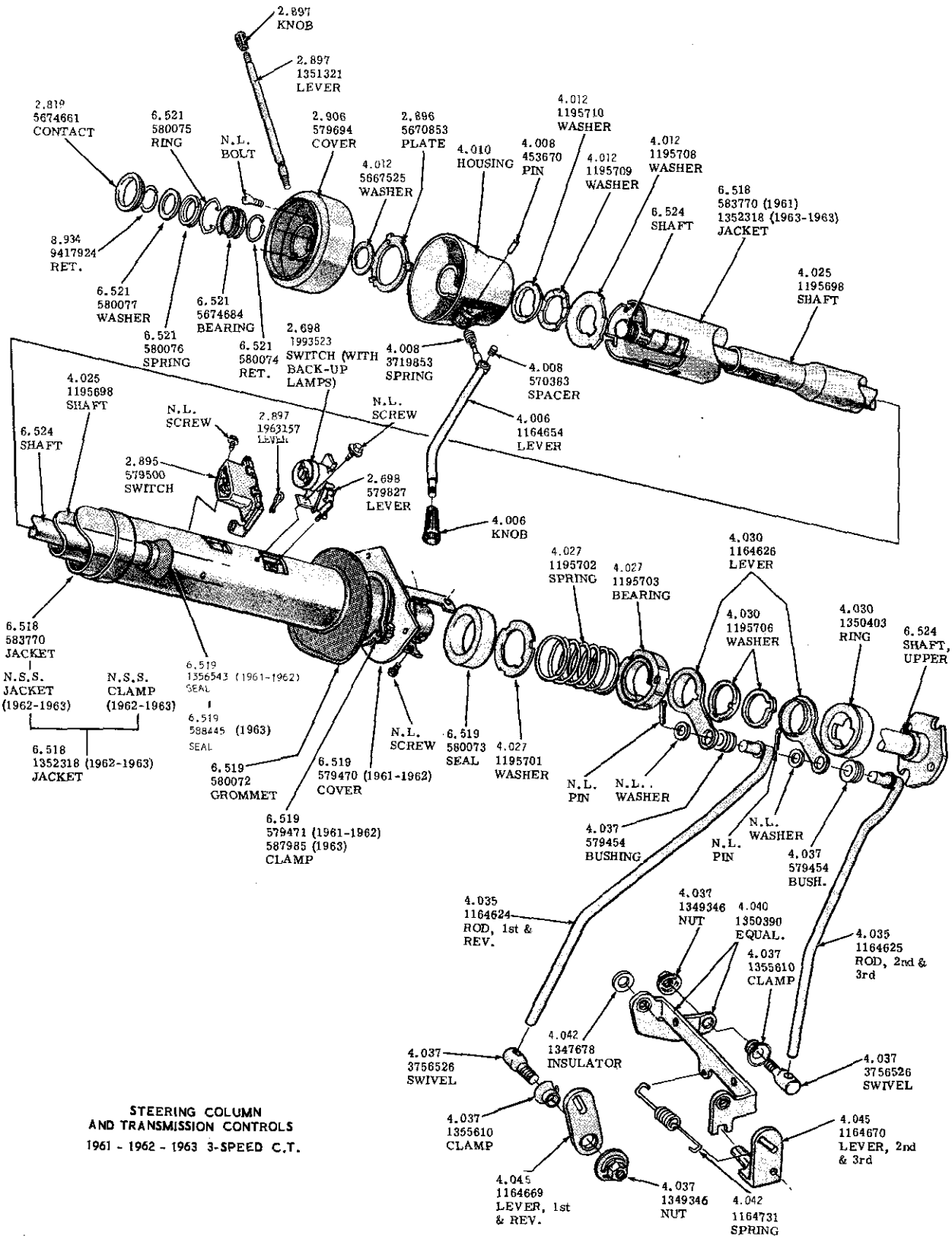

STEERING COLUMN
AND TRANSMISSION CONTROLS
1961 - 1962 - 1963 3-SPEED C.T.

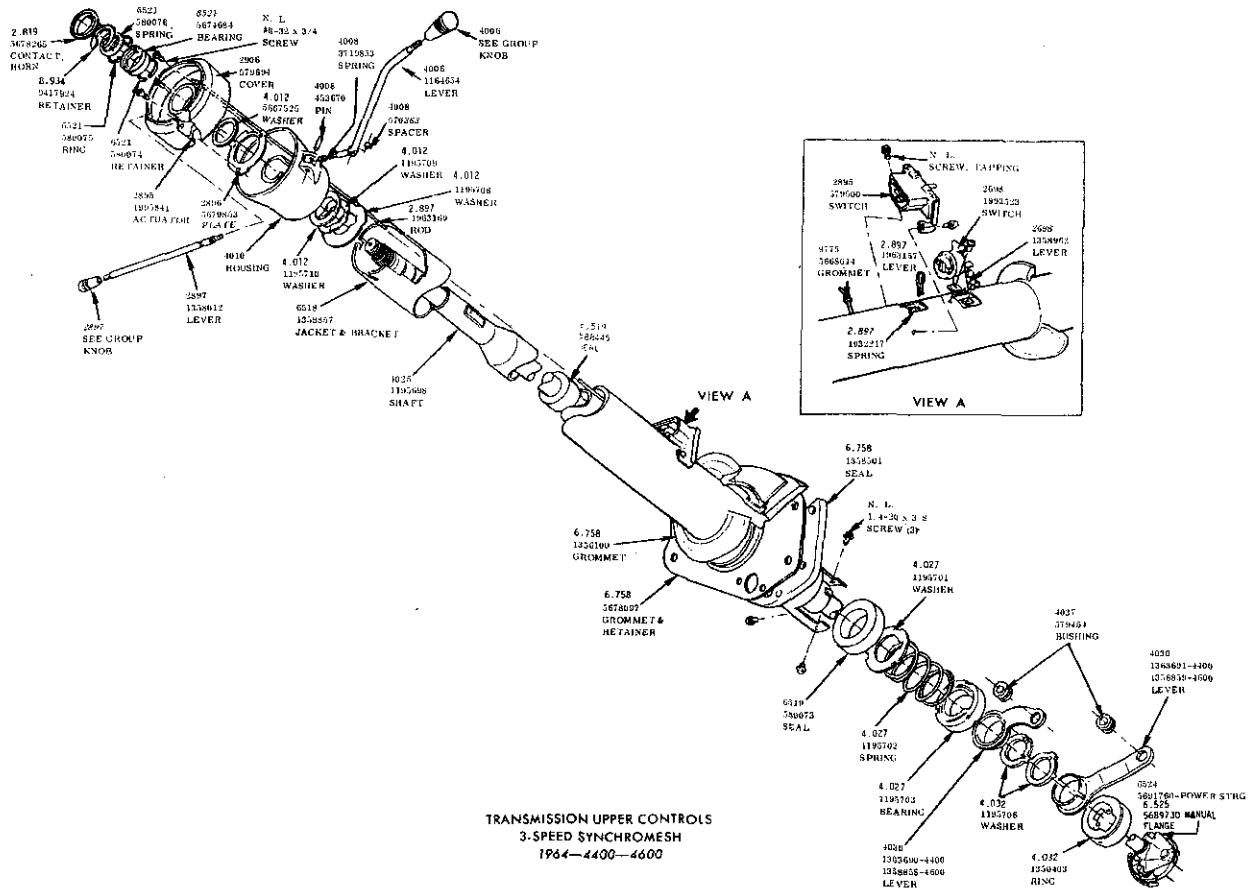

TRANSMISSION UPPER CONTROLS
3-SPEED SYNCHROMESH
1964—4400—4600

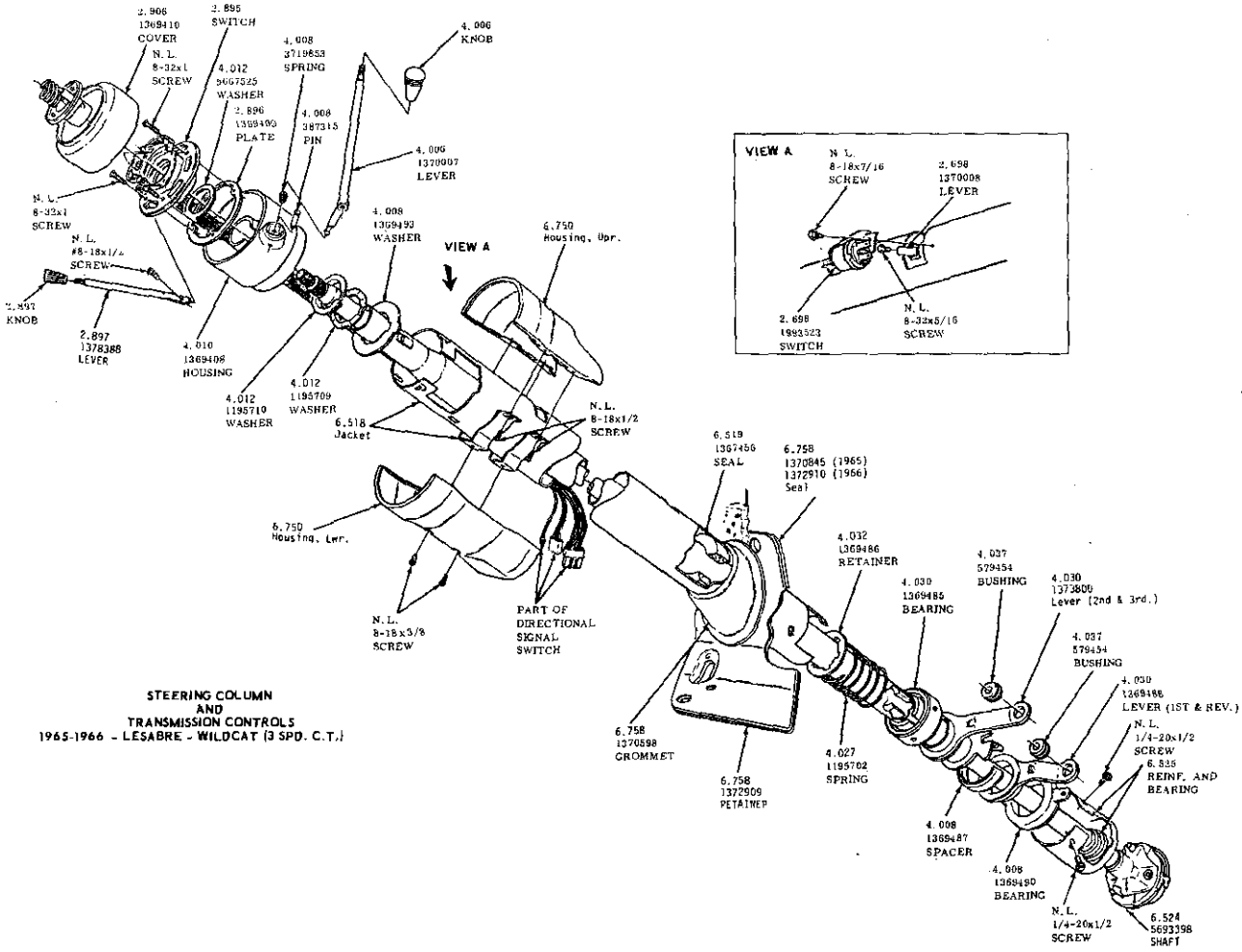

STEERING COLUMN AND TRANSMISSION CONTROLS
1965-1966 - LESABRE - WILDCAT (3 SPD. C.T.)

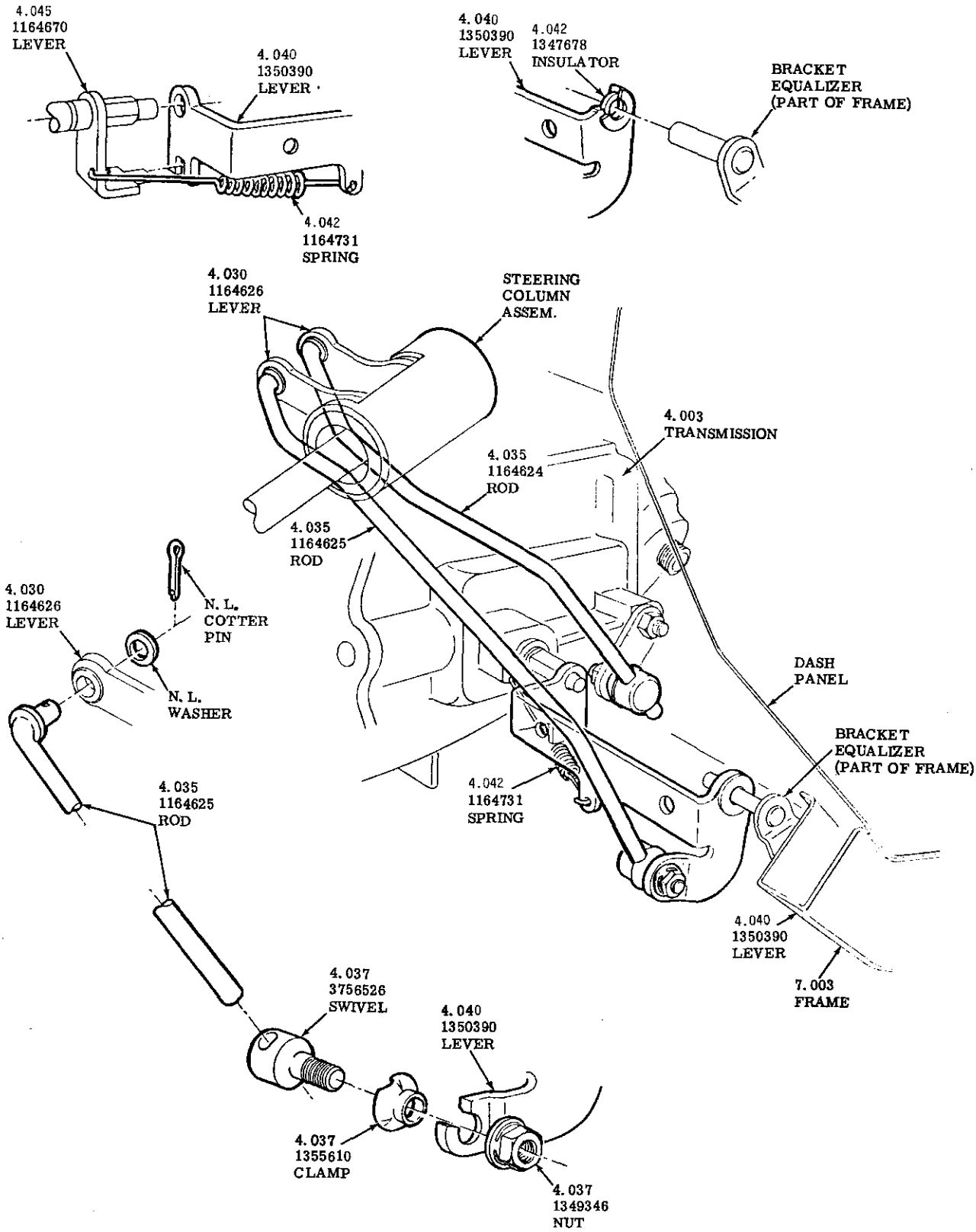

TRANSMISSION LOWER CONTROLS
1963-4000-4100-4300

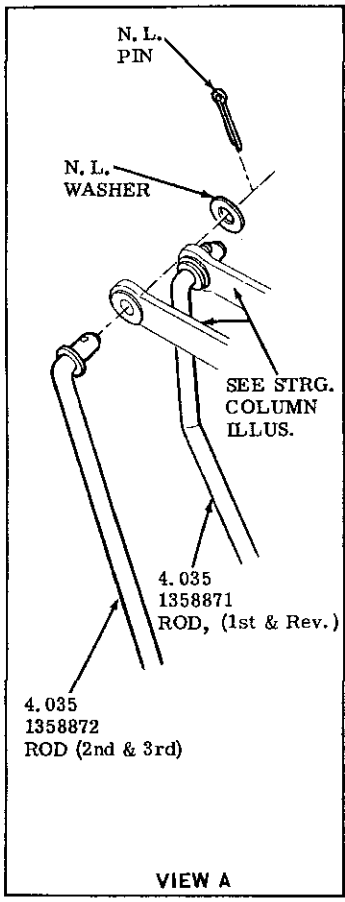

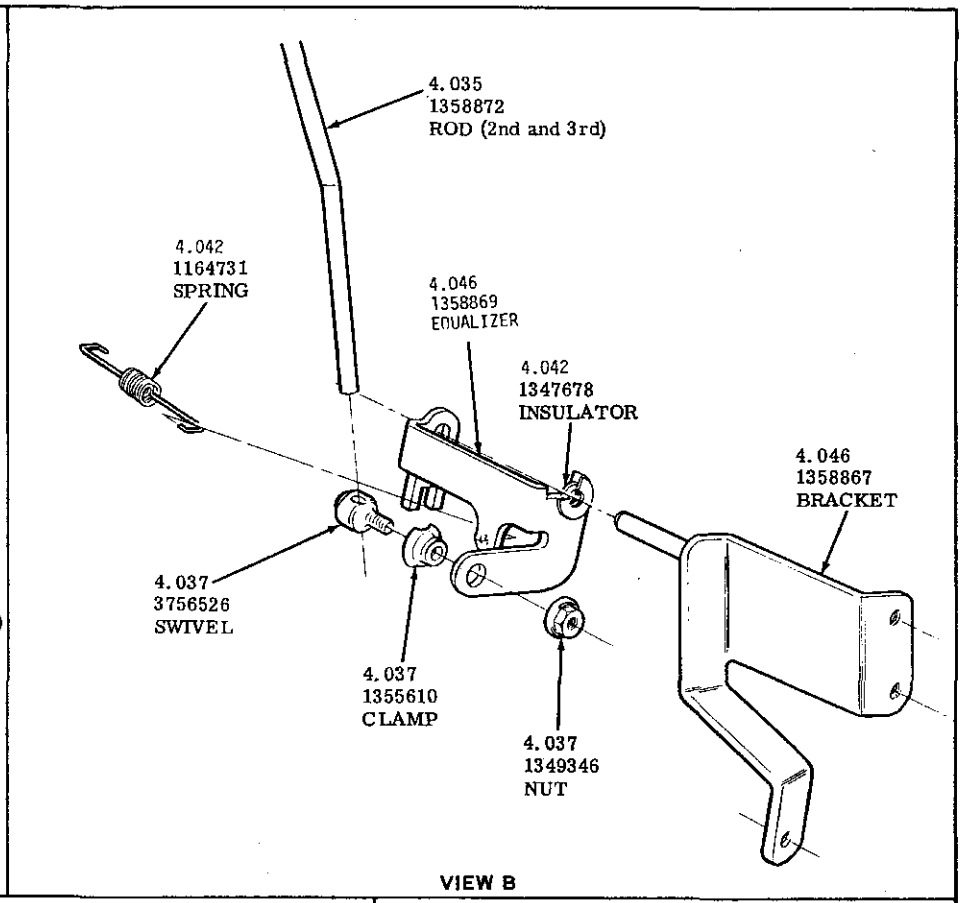

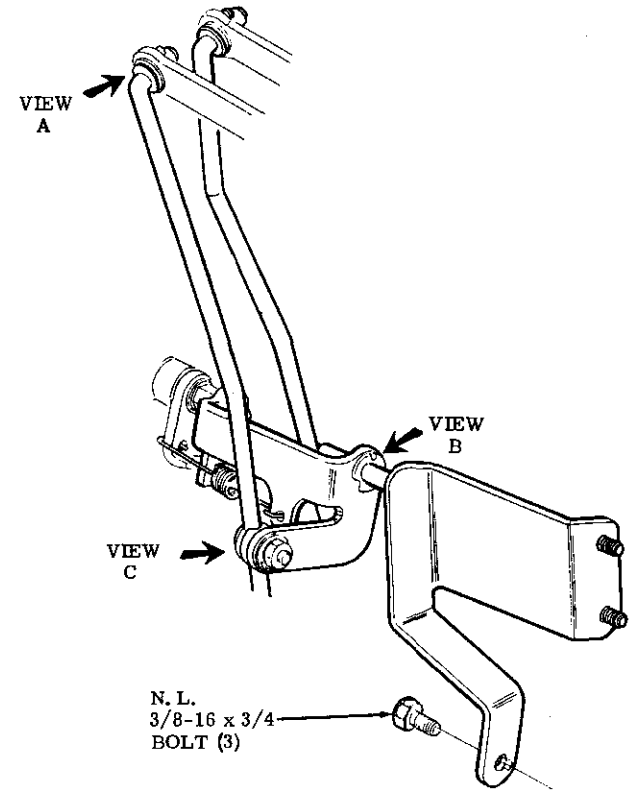

TRANSMISSION LOWER CONTROLS
1963-4400 C.T. 3 SPEED

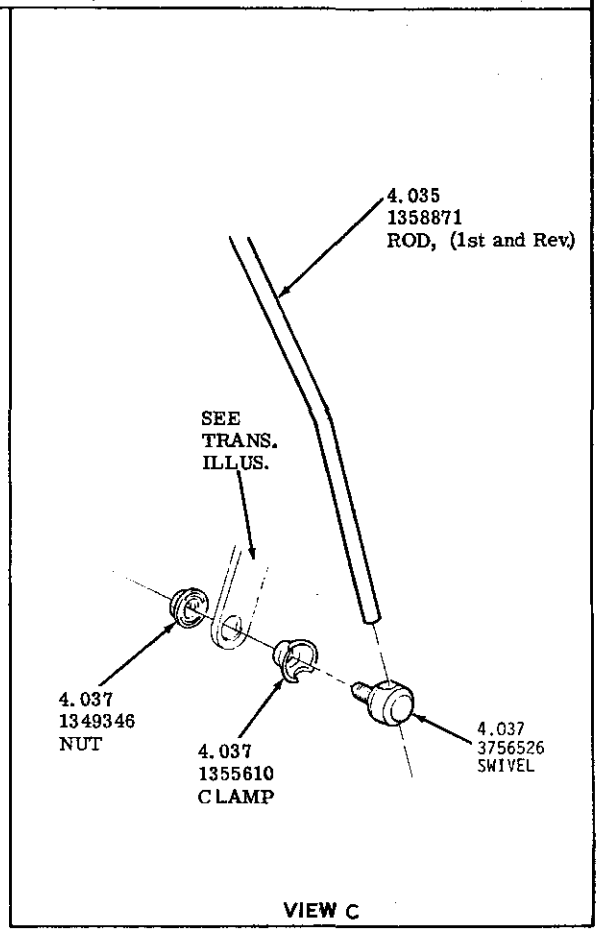

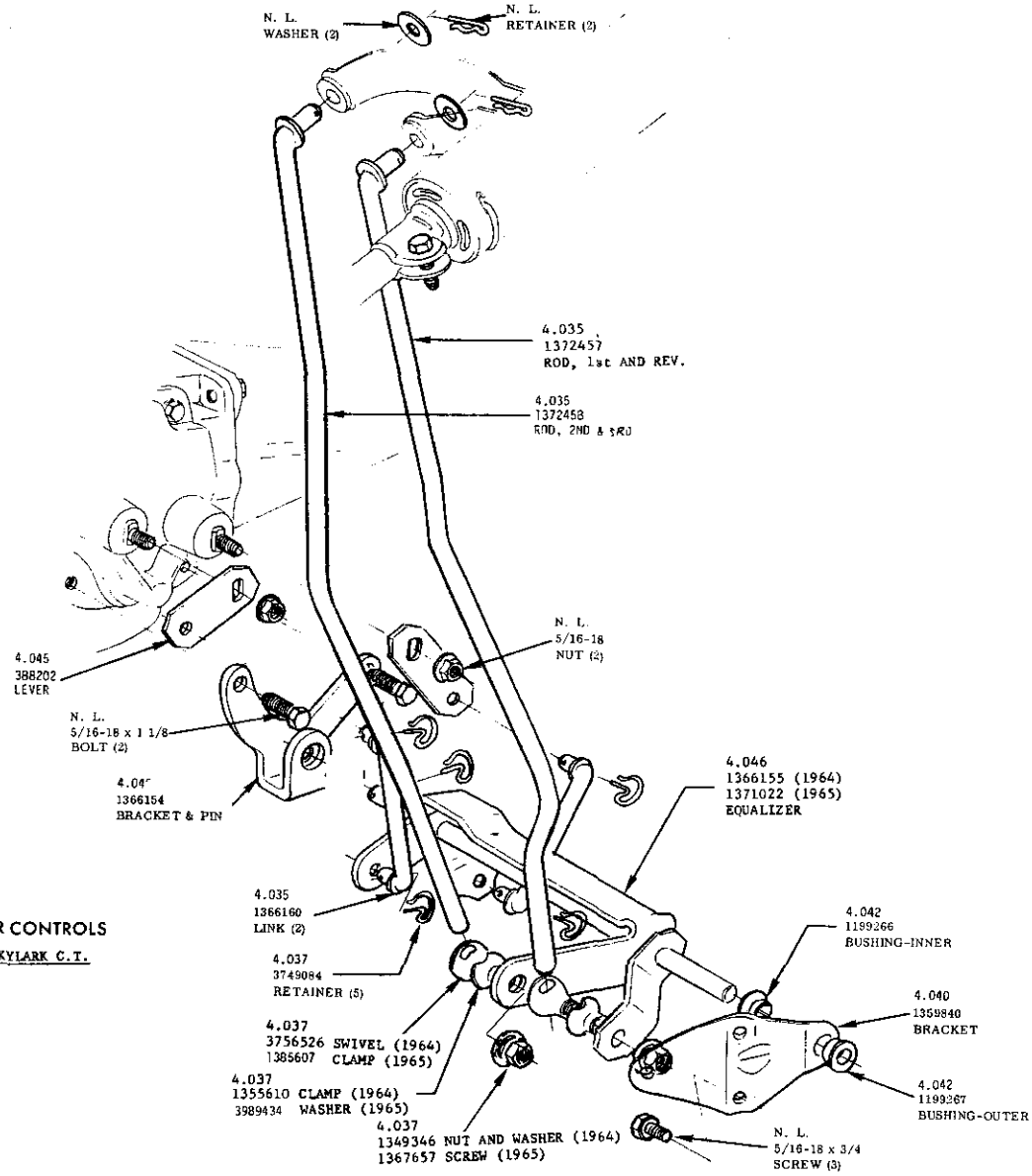

TRANSMISSION LOWER CONTROLS

1964-1965 SPECIAL - SKYLARK C.T.

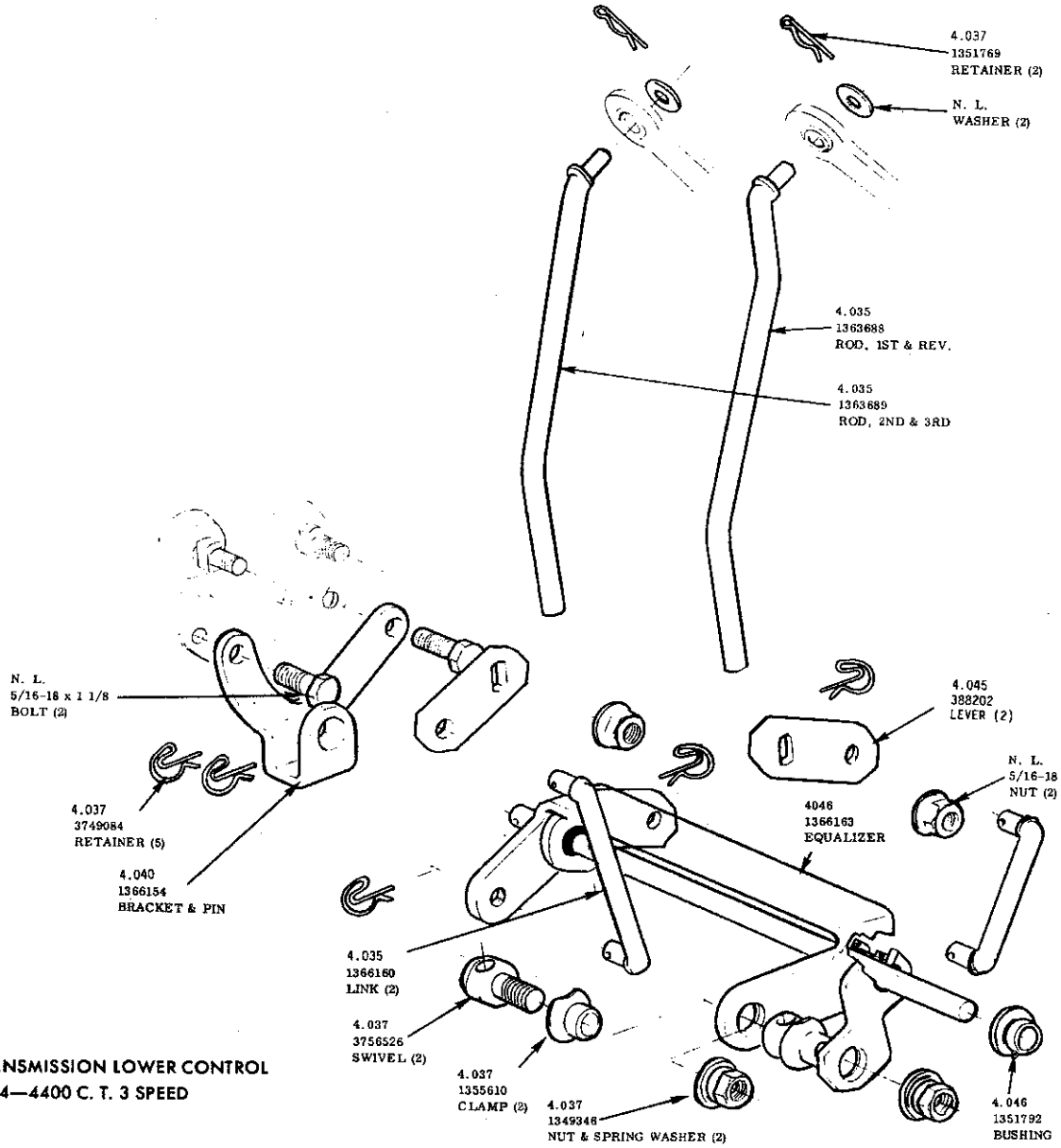

TRANSMISSION LOWER CONTROL
1964—4400 C. T. 3 SPEED

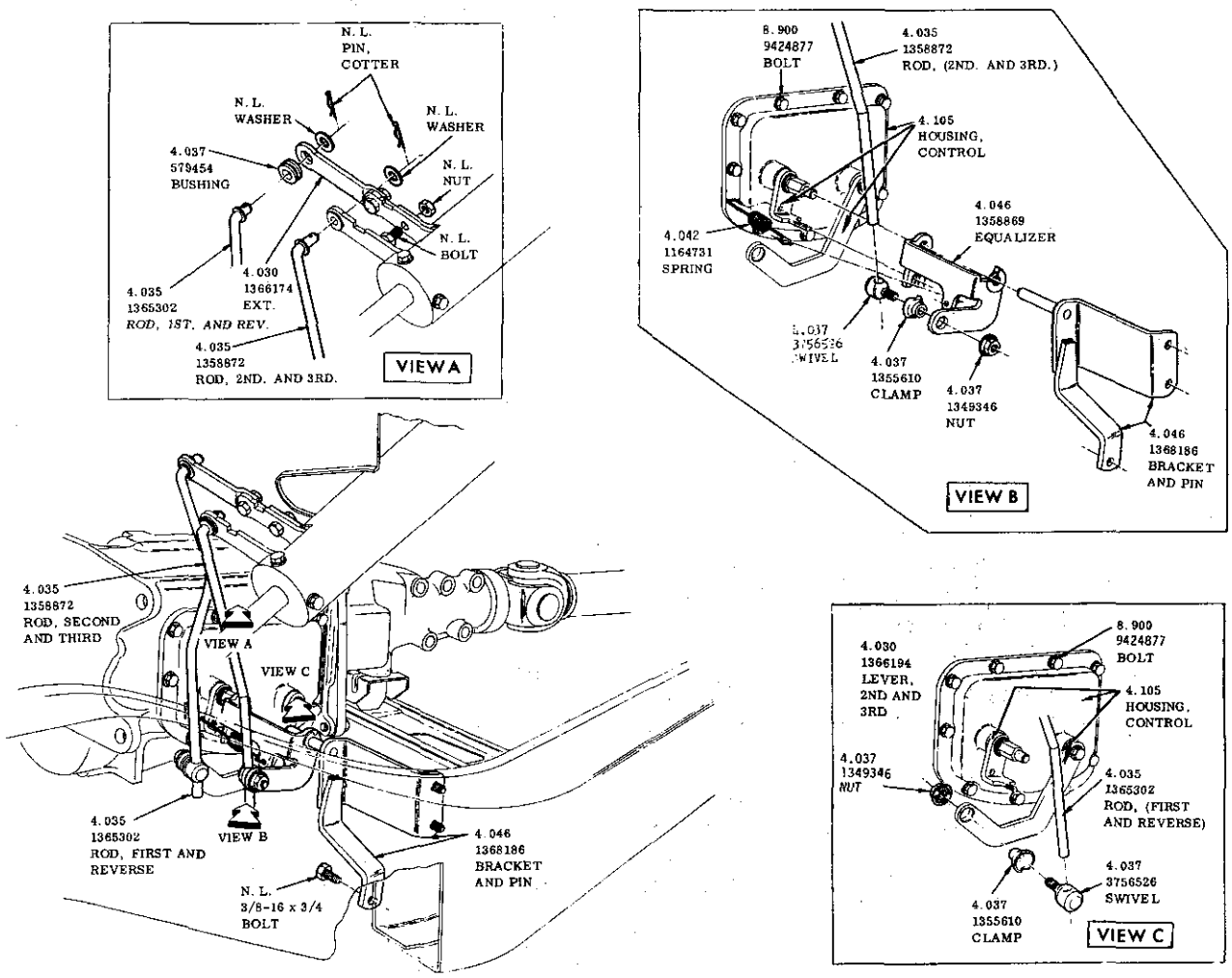

TRANSMISSION LOWER CONTROLS
1964--4600-3 SPD. C.T.

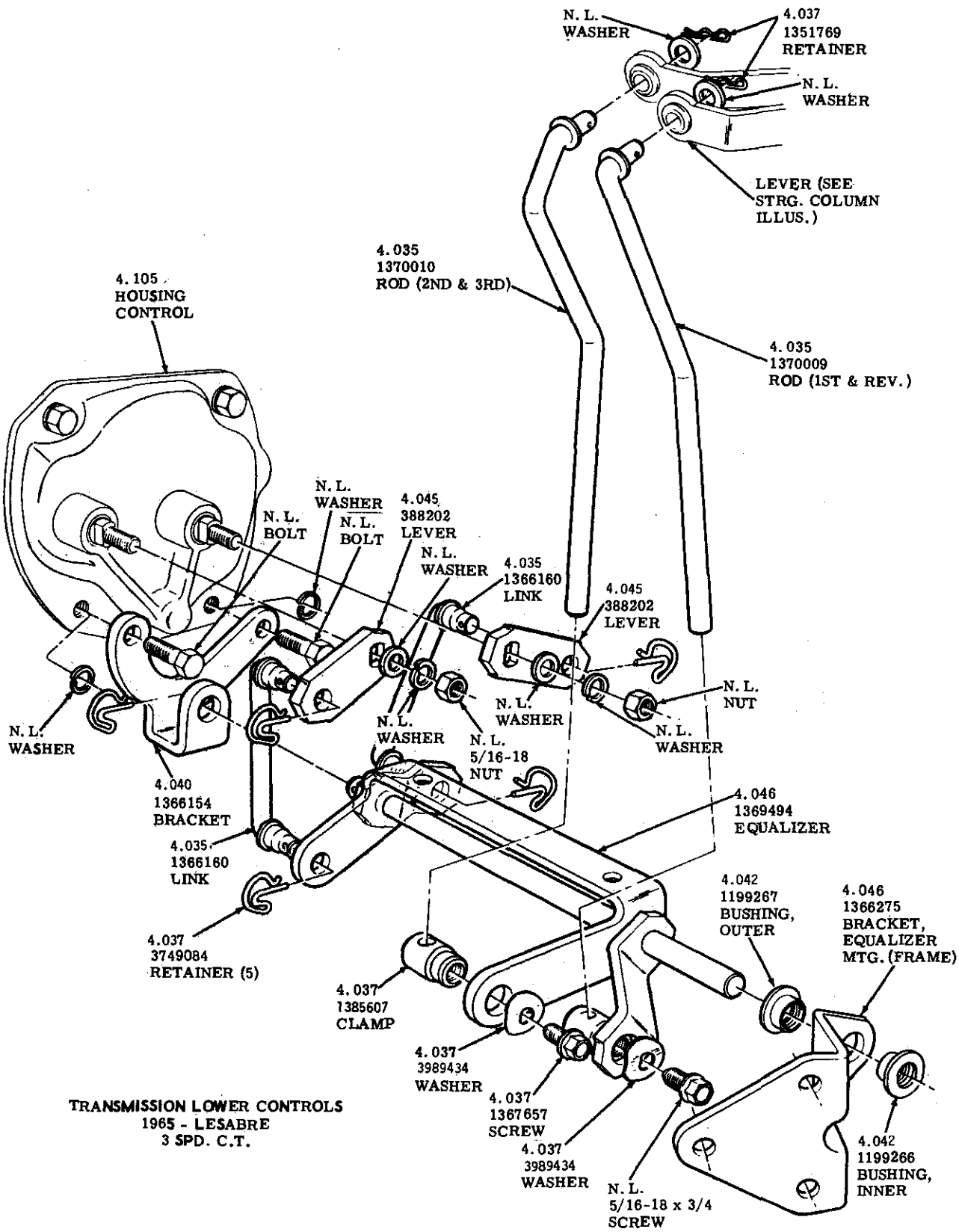

TRANSMISSION LOWER CONTROLS
1965 - LESABRE
3 SPD. C.T.

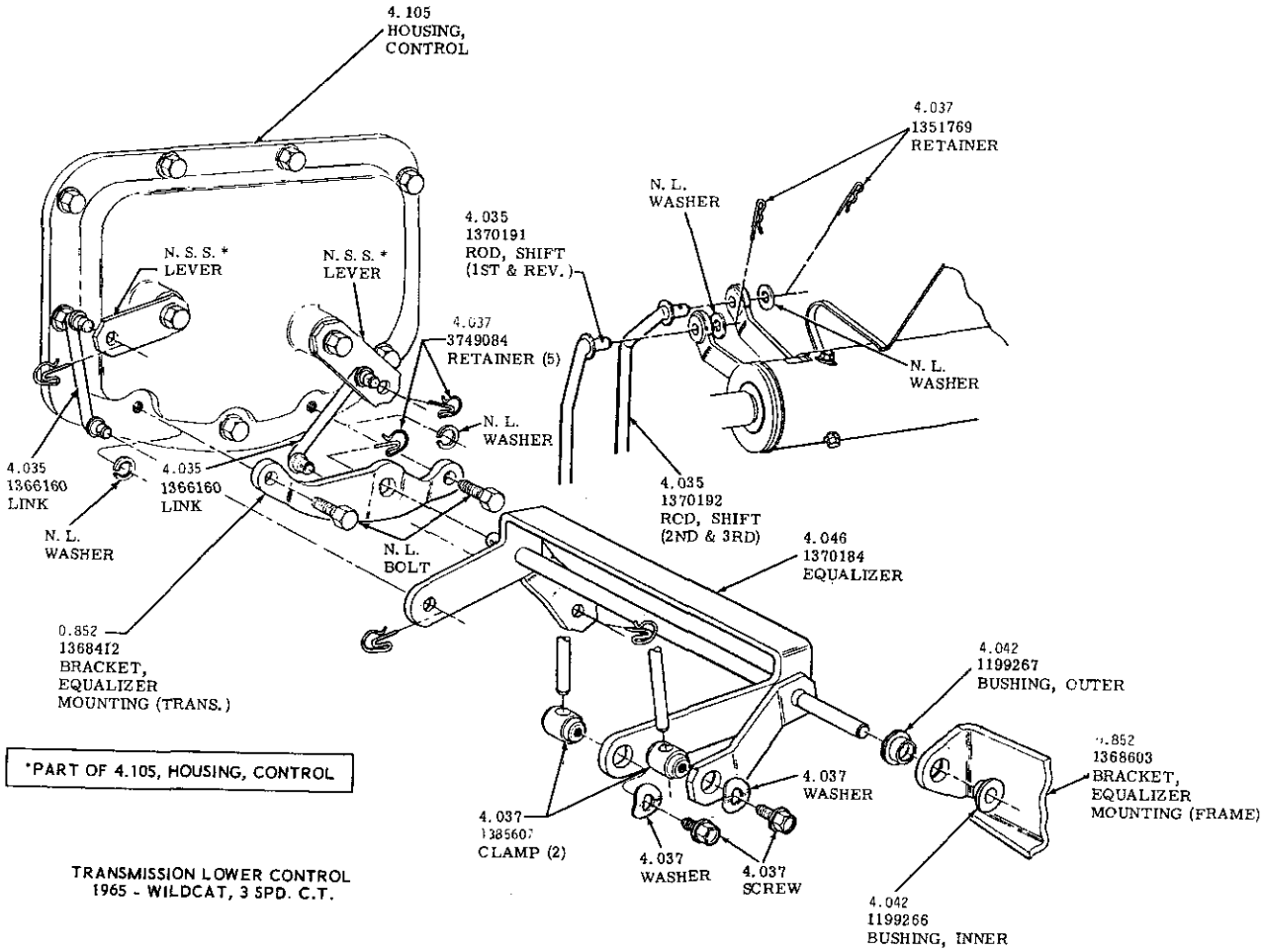

*PART OF 4.105, HOUSING, CONTROL

TRANSMISSION LOWER CONTROL
1965 - WILDCAT, 3 SPD. C.T.

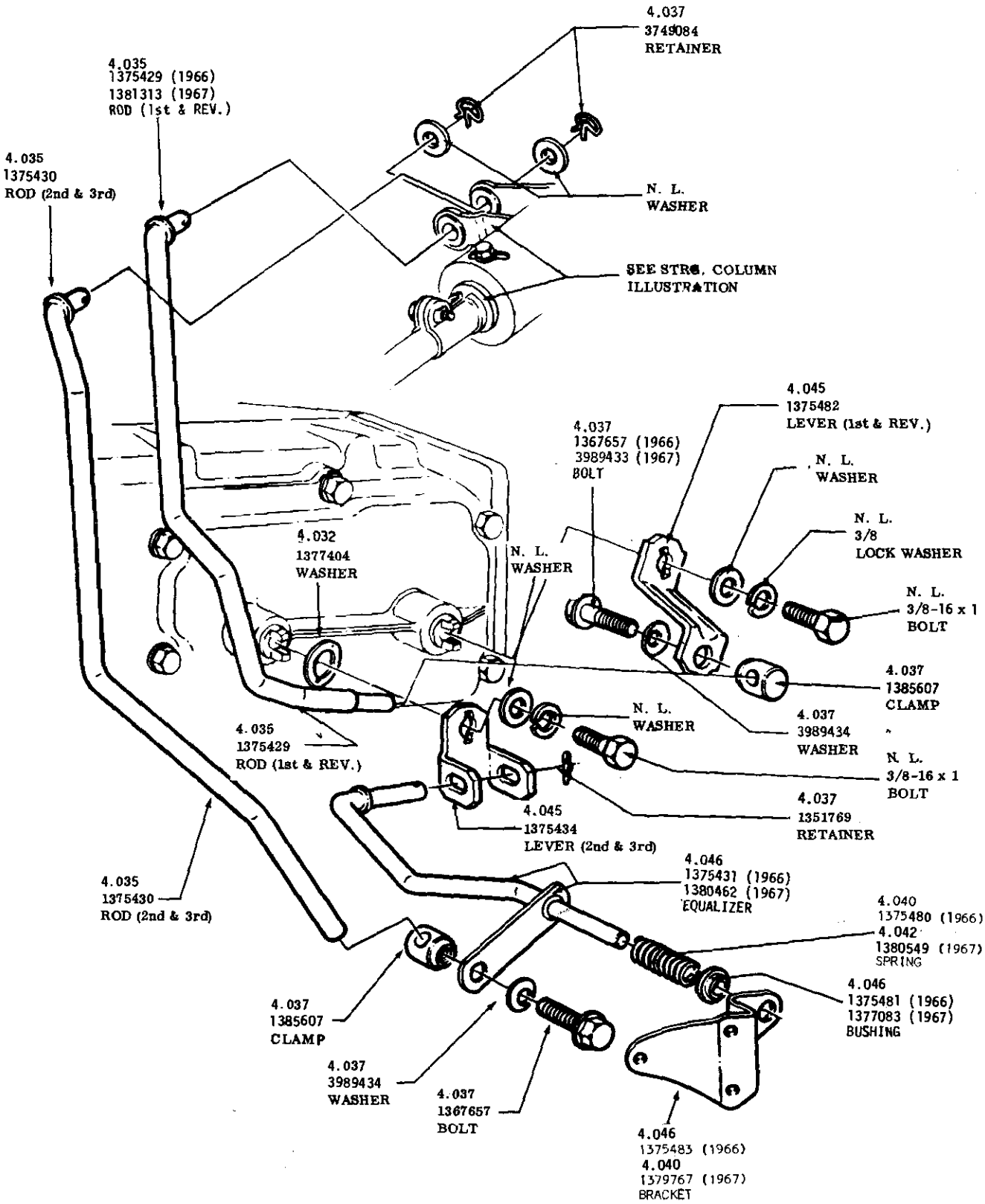

TRANSMISSION LOWER CONTROLS
1966-1967 —SPECIAL—SKYLARK
3 SPEED MANUAL TRANSMISSION—COLUMN SHIFT

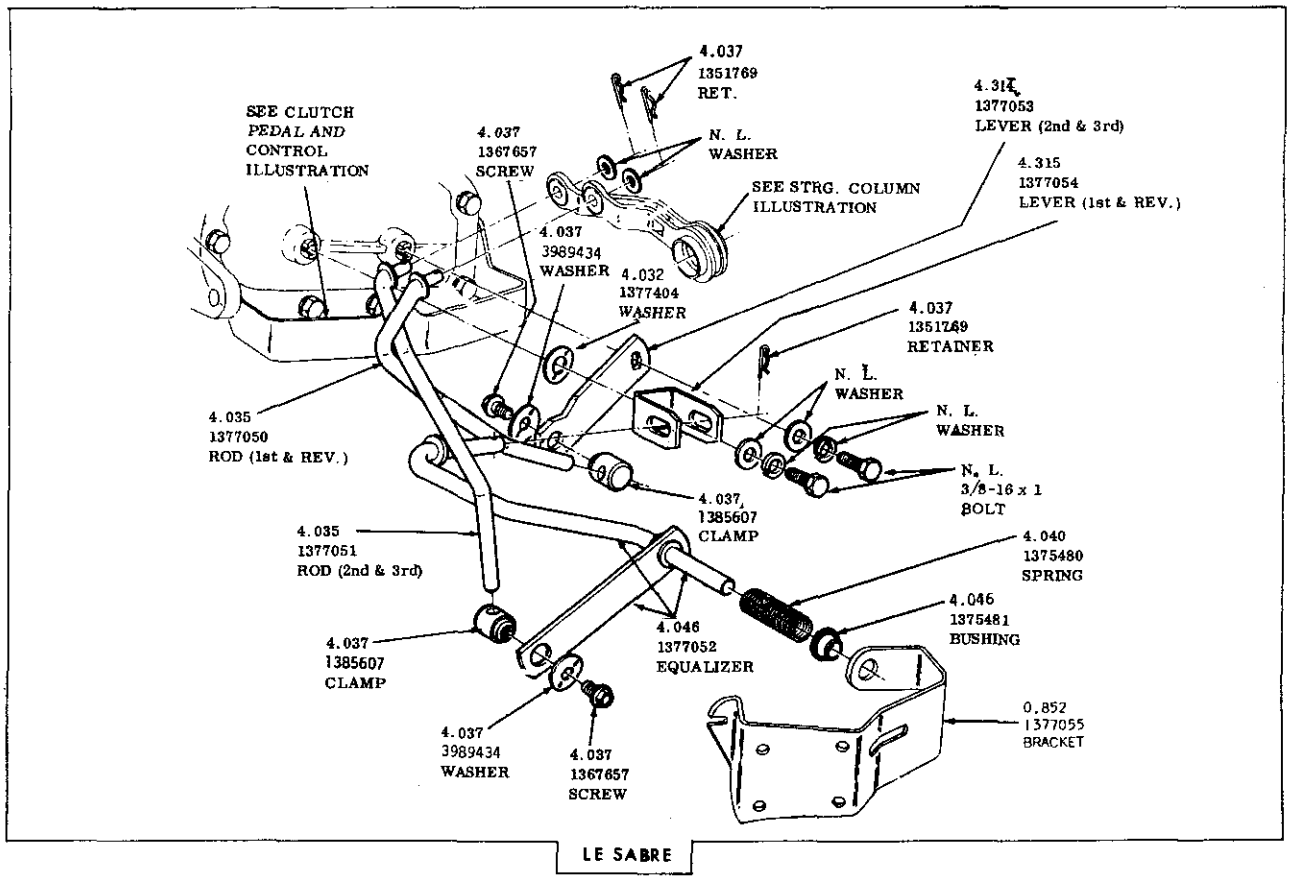

LE SABRE

TRANSMISSION LOWER CONTROLS
3 SPEED MANUAL TRANSMISSION
1966-1967-LESABRE

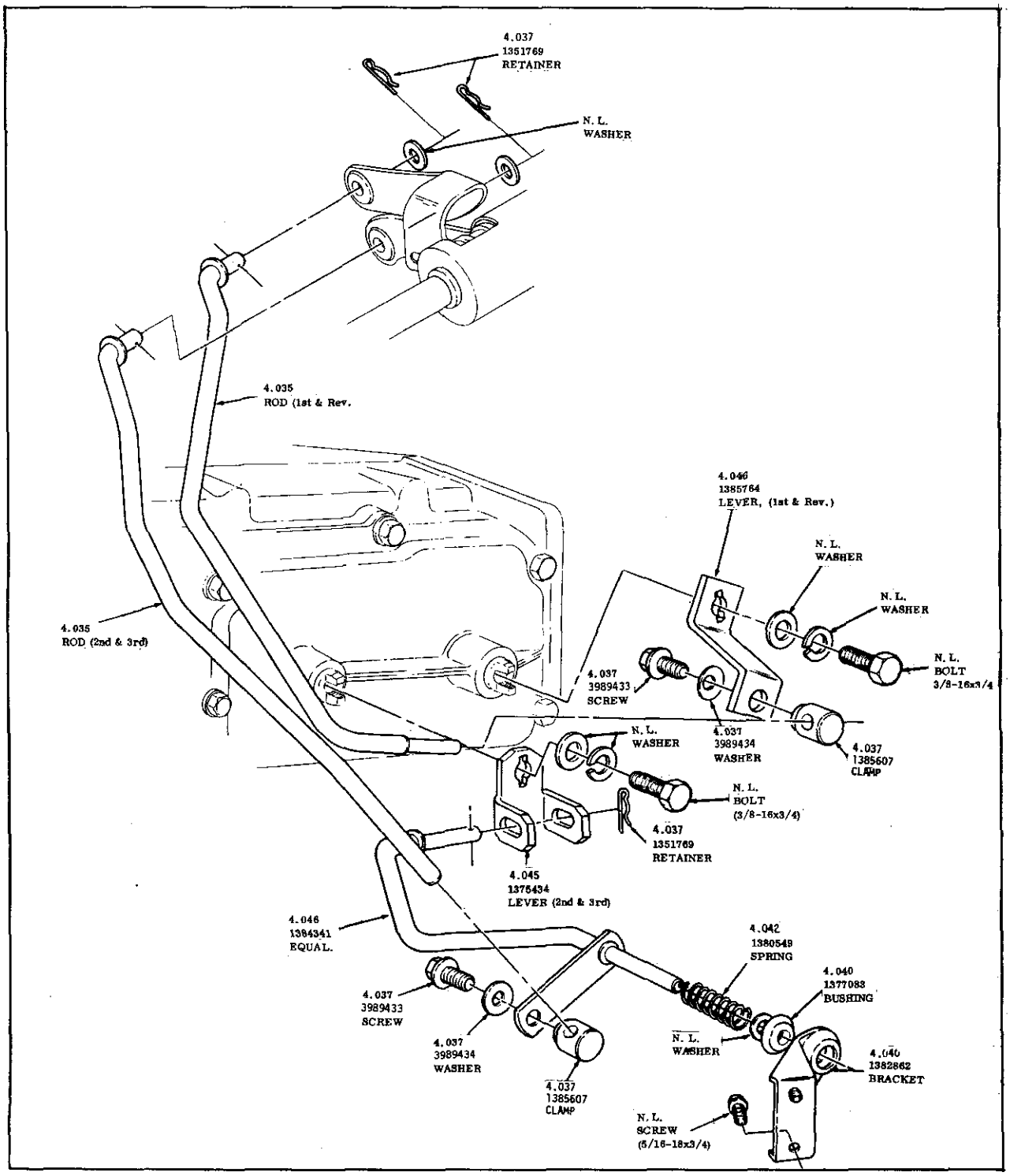

TRANSMISSION LOWER CONTROLS
1968-1969 -30-4000 EXC. 4600

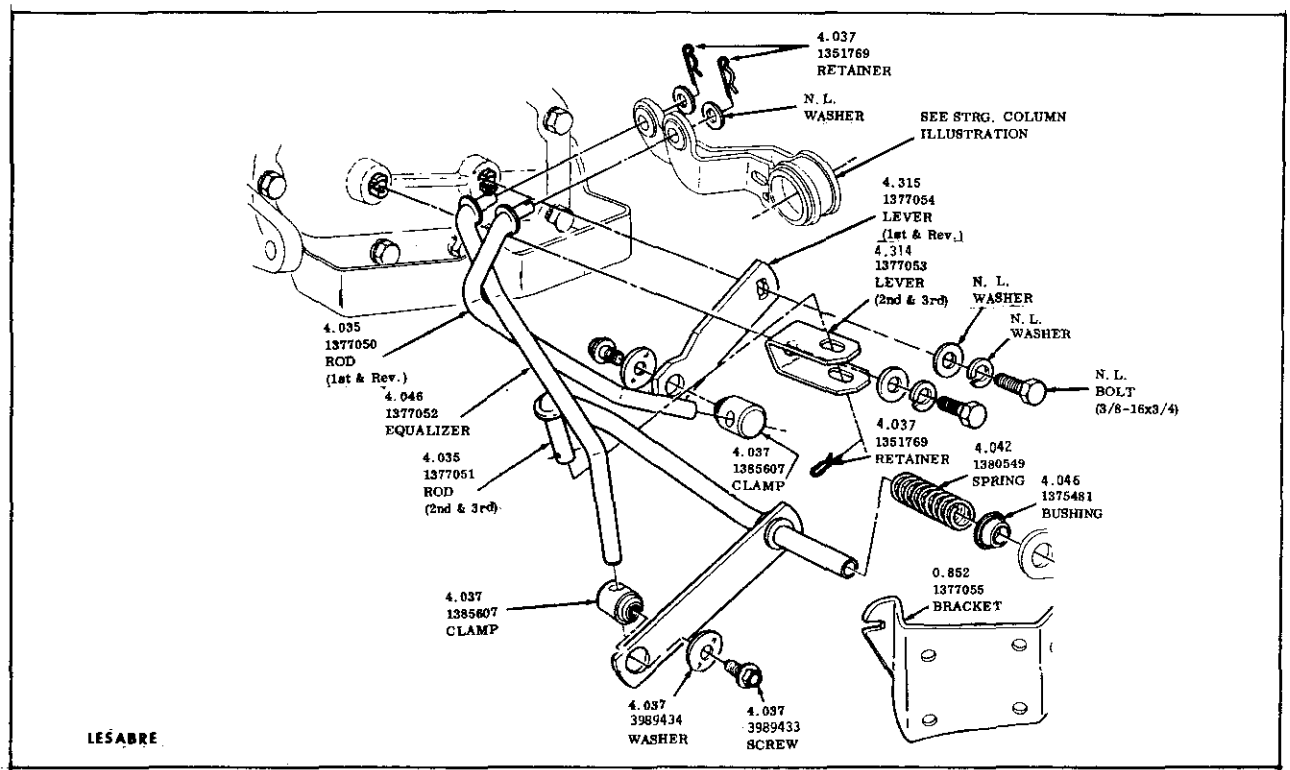

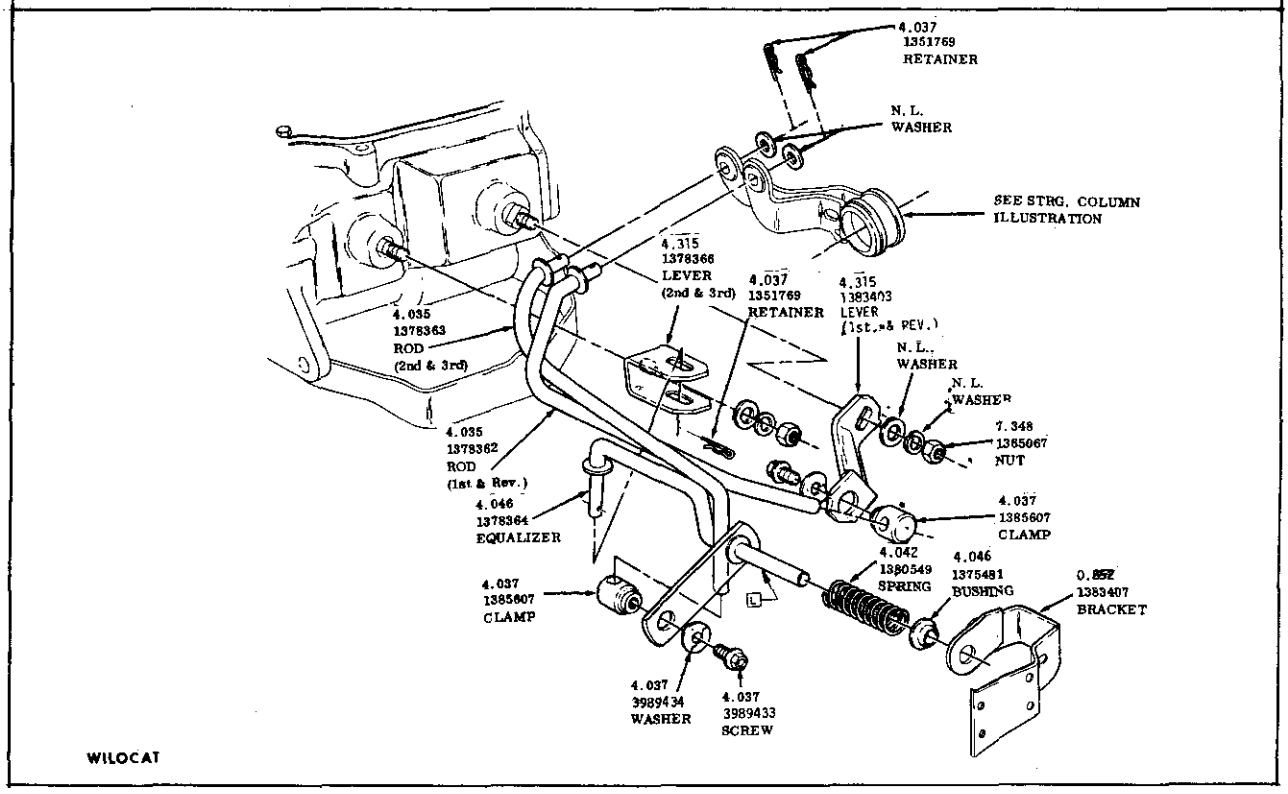

TRANSMISSION LOWER CONTROLS
3 SPEED MANUAL TRANSMISSION
1968 - LESABRE-WILDCAT

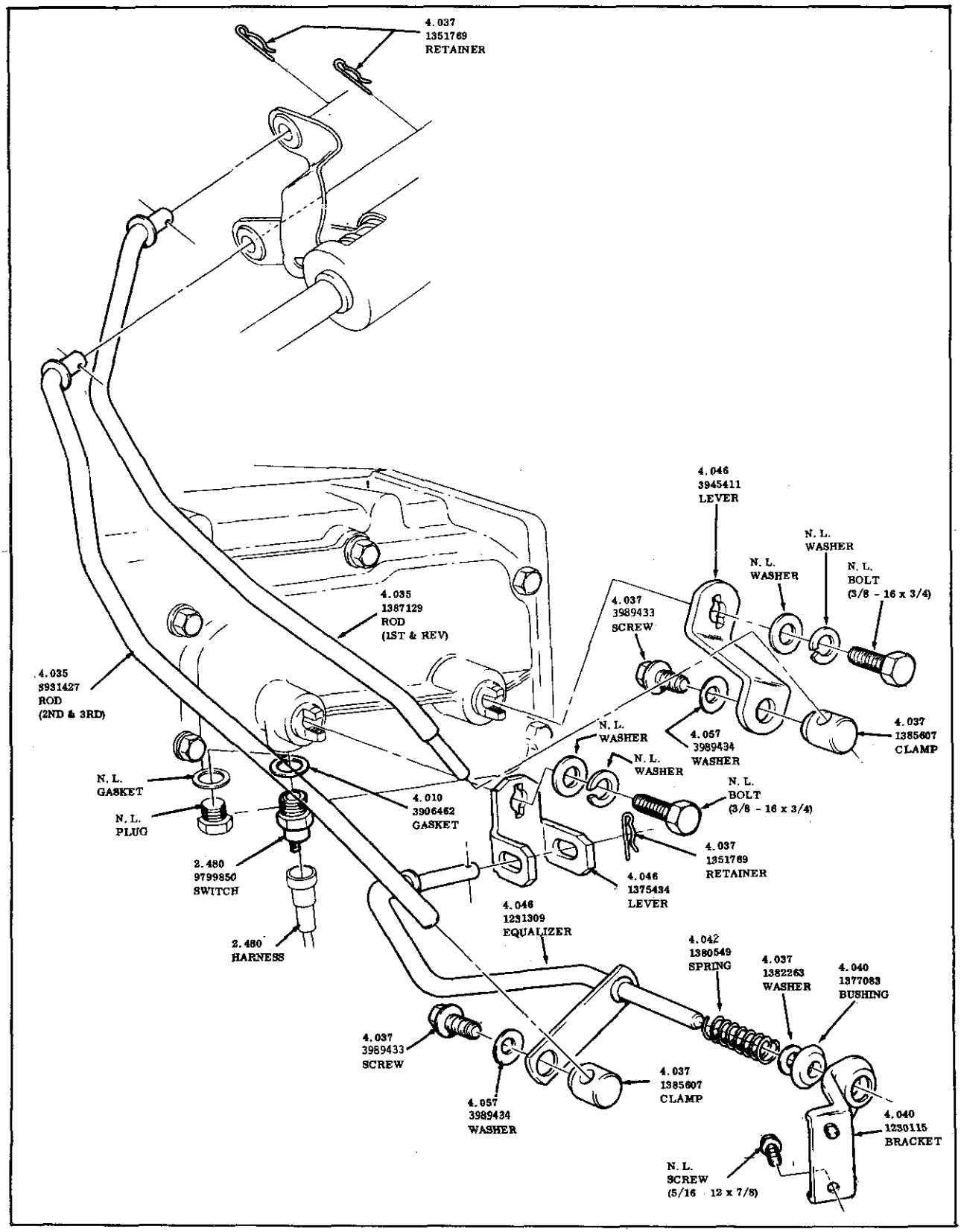

TRANSMISSION LOWER CONTROL
3 SPEED MANUAL TRANS.
1970-1972 30-4000

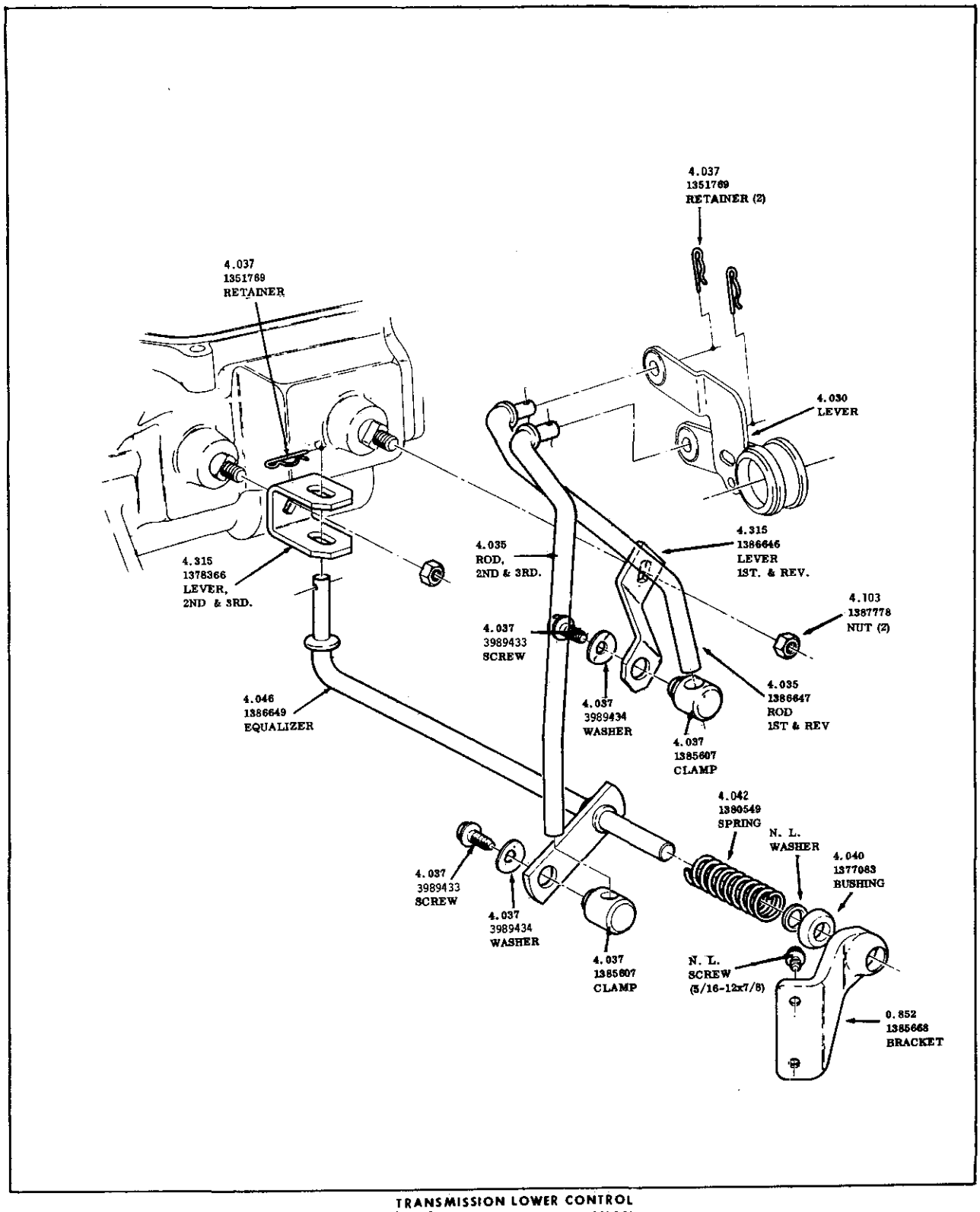

TRANSMISSION LOWER CONTROL
3 SPEED MANUAL TRANSMISSION
1969-1970 LESABRE - WILDCAT

MEMORANDA

3 SPEED

MANUAL

TRANSMISSION

FLOOR SHIFT

MEMORANDA

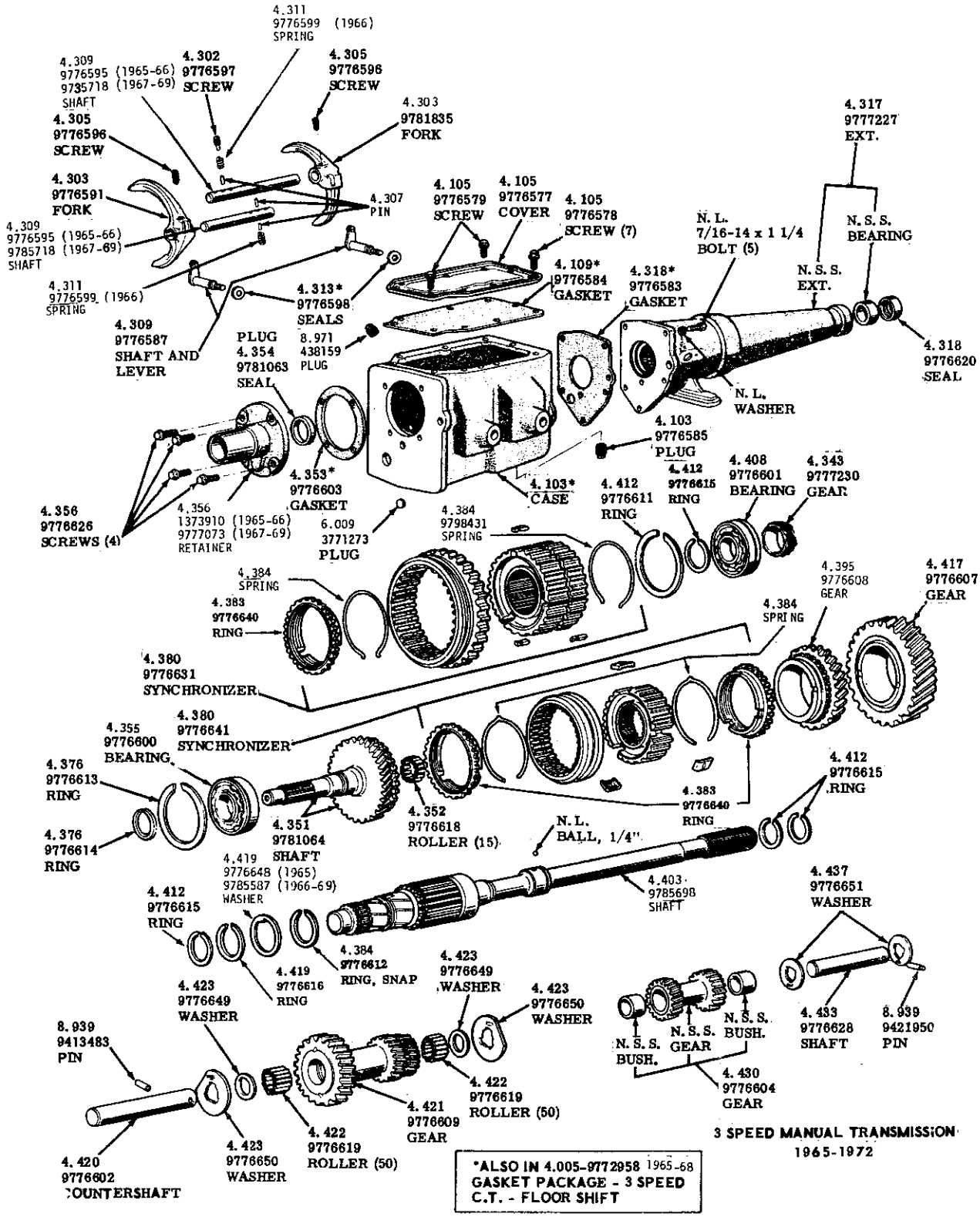
4.311
9776599 (1966)
SPRING
4.309
9776595 (1965-66)
9735718 (1967-69)
SHAFT
4.302
9776597
SCREW
4.305
9776596
SCREW
4.303
9781835
FORK
4.305
9776596
SCREW
4.303
9776591
FORK
4.307
PIN
4.309
9776595 (1965-66)
9785718 (1967-69)
SHAFT
4.311
9776599 (1966)
SPRING
4.313*
9776598
SEALS
4.309
9776587
SHAFT AND
LEVER
PLUG
4.354
9781063
SEAL
8.971
438159
PLUG
4.105
9776579
SCREW
4.105
9776577
COVER
4.105
9776578
SCREW (7)
4.109*
9776584
GASKET
4.318*
9776583
GASKET
N. L.
7/16-14 x 1 1/4
BOLT (5)
4.317
9777227
EXT.
N. S. S.
BEARING
N. S. S.
EXT.
4.318
9776620
SEAL
N. L.
WASHER
4.103
9776585
PLUG
4.356
9776626
SCREWS (4)
4.356
1373910 (1965-66)
9777073 (1967-69)
RETAINER
4.353*
9776603
GASKET
6.009
3771273
PLUG
4.103*
CASE
4.384
9798431
SPRING
4.412
9776611
RING
4.412
9776615
RING
4.408
9776601
BEARING
4.343
9777230
GEAR
4.384
SPRING
4.383
9776640
RING
4.395
9776608
GEAR
4.417
9776607
GEAR
4.384
SPRING
4.380
9776631
SYNCHRONIZER
4.380
9776641
SYNCHRONIZER
4.355
9776600
BEARING
4.376
9776613
RING
4.376
9776614
RING
4.351
9781064
SHAFT
4.352
9776618
ROLLER (15)
4.383
9776640
RING
4.412
9776615
RING
N. L.
BALL, 1/4"
4.419
9776648 (1965)
9785587 (1966-69)
WASHER
4.403
9785698
SHAFT
4.437
9776651
WASHER
4.412
9776615
RING
4.384
9776612
RING, SNAP
4.419
9776616
RING
4.423
9776649
WASHER
4.423
9776649
WASHER
4.423
9776650
WASHER
N. S. S.
BUSH.
N. S. S.
GEAR
N. S. S.
BUSH.
4.433
9776628
SHAFT
8.939
9421950
PIN
8.939
9413483
PIN
4.422
9776619
ROLLER (50)
4.430
9776604
GEAR
4.421
9776609
GEAR
4.420
9776602
COUNTERSHAFT
4.423
9776650
WASHER
4.422
9776619
ROLLER (50)
3 SPEED MANUAL TRANSMISSION
1965-1972
*ALSO IN 4.005-9772958 1965-68
GASKET PACKAGE - 3 SPEED
C.T. - FLOOR SHIFT

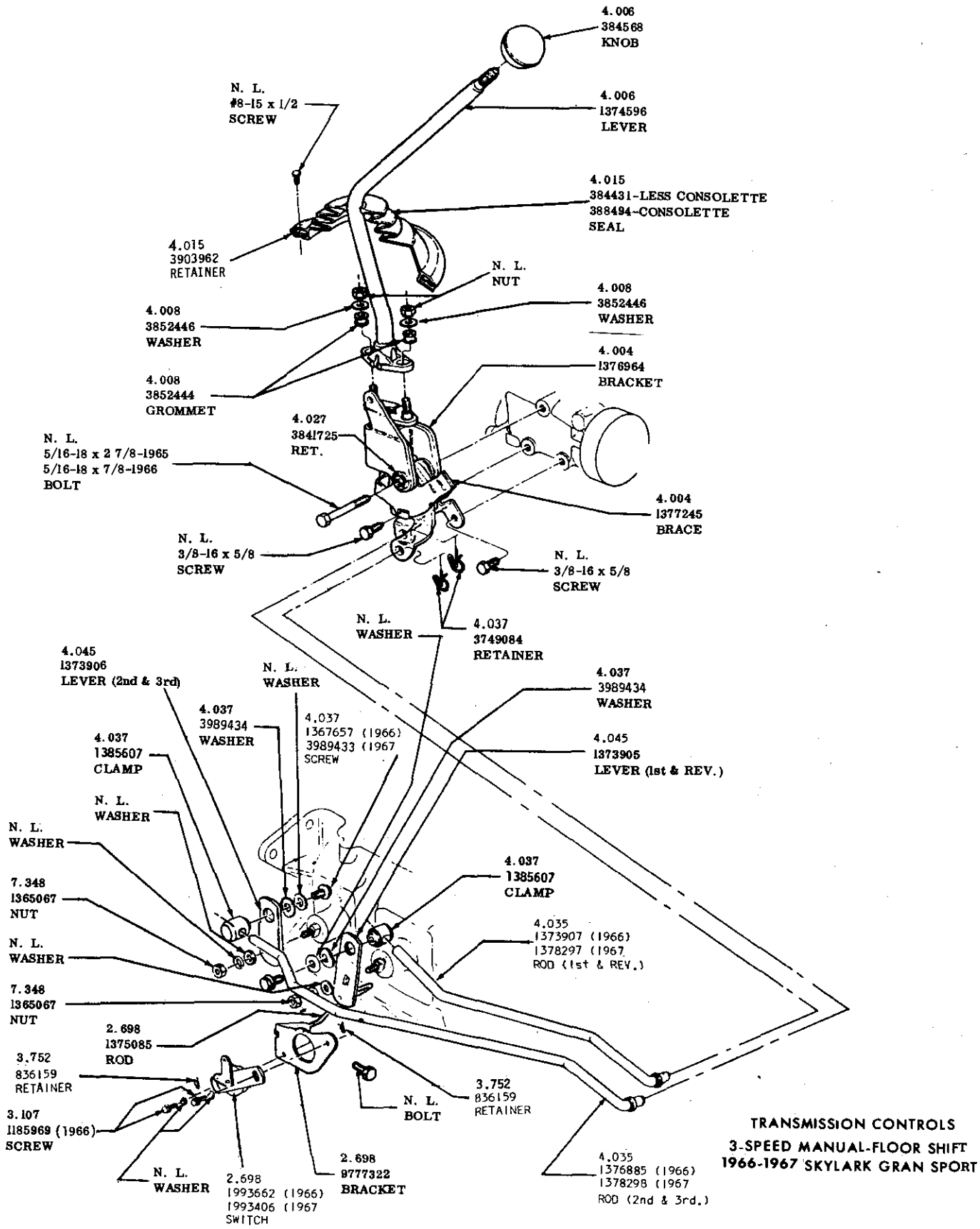

TRANSMISSION CONTROLS
3-SPEED MANUAL-FLOOR SHIFT
1966-1967 SKYLARK GRAN SPORT

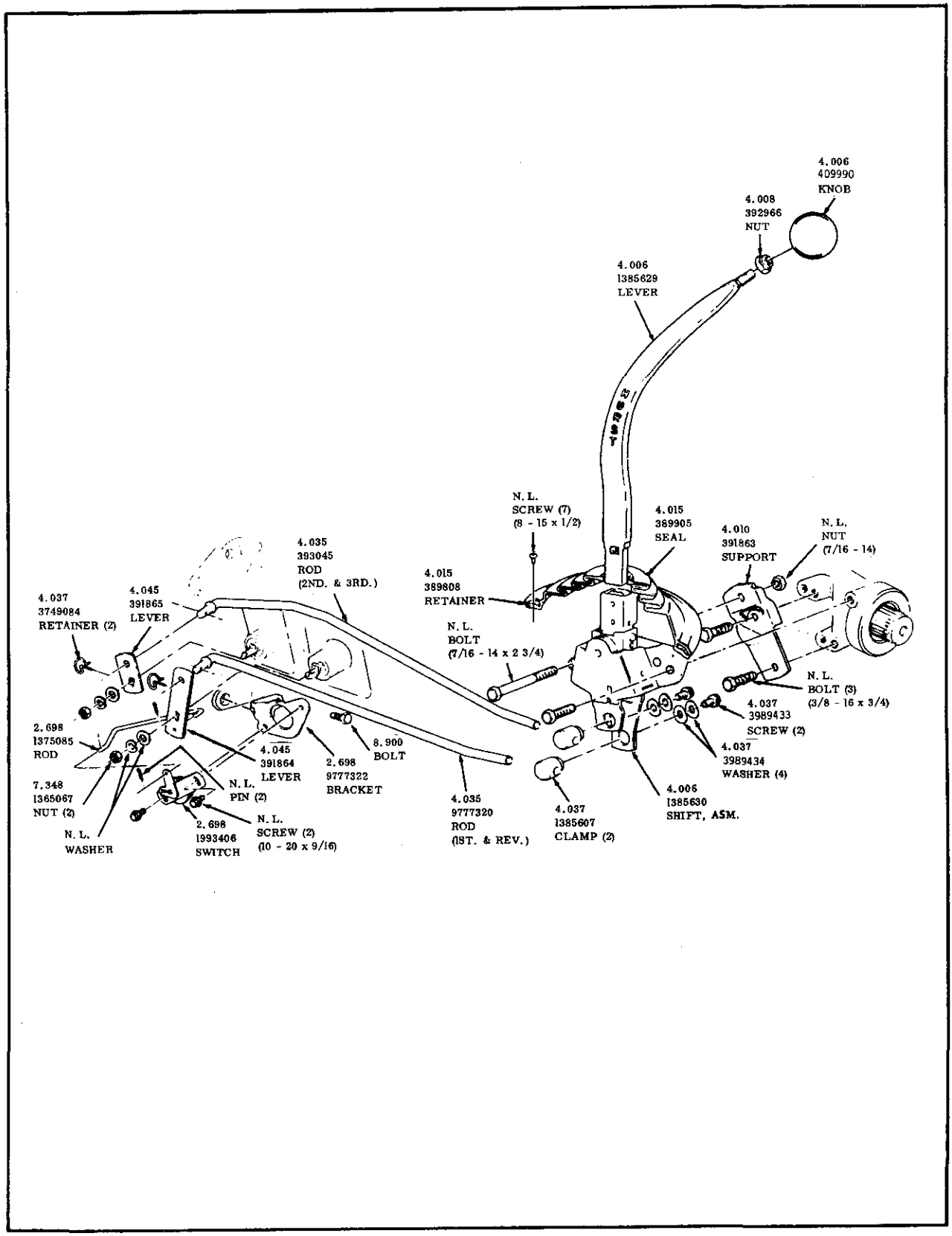

TRANSMISSION CONTROL
3 SPEED MANUAL (FLOOR SHIFT)
1968 - G. S. 400

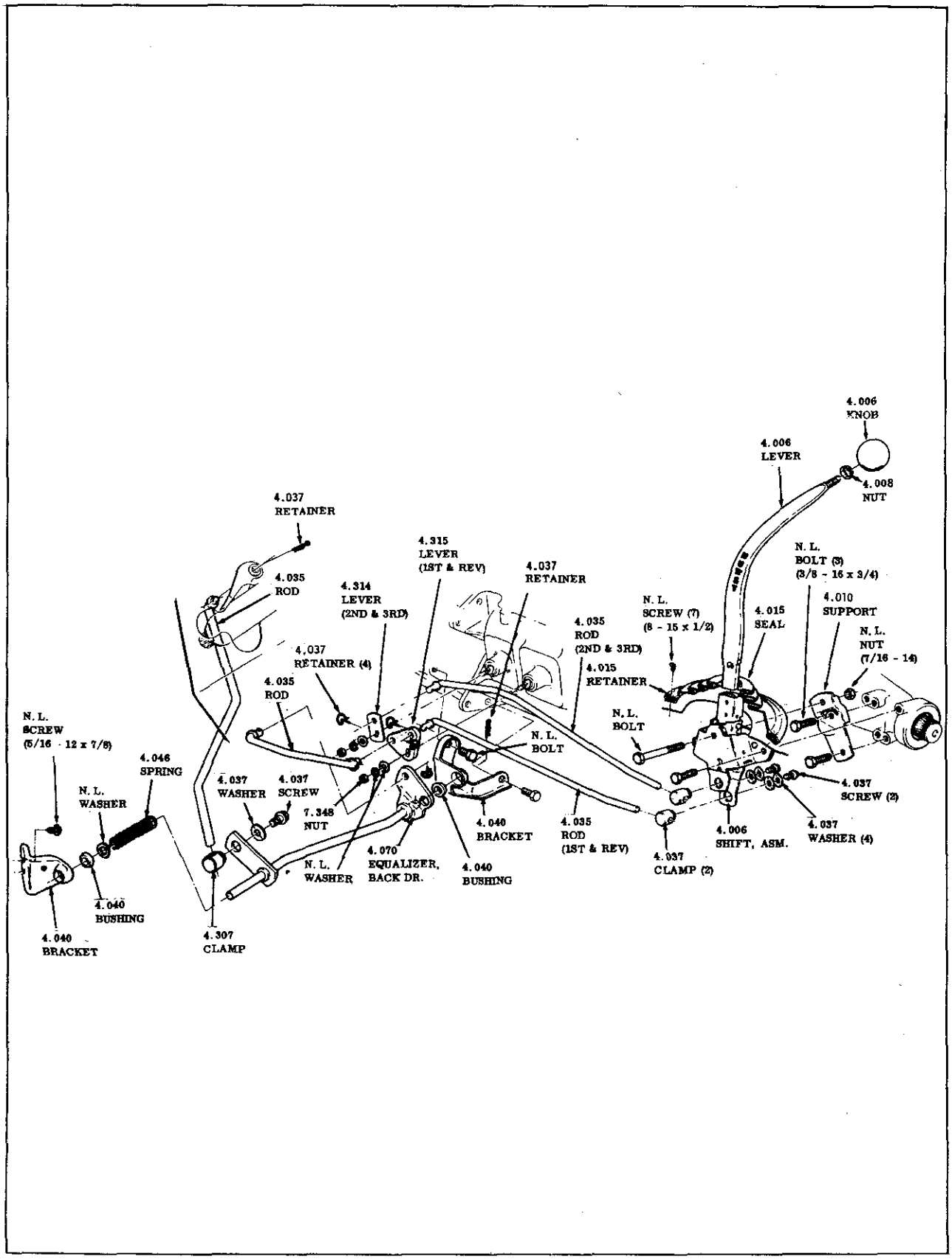

3 SPEED MANUAL (FLOOR SHIFT)
1969-1972 -G.S.-400

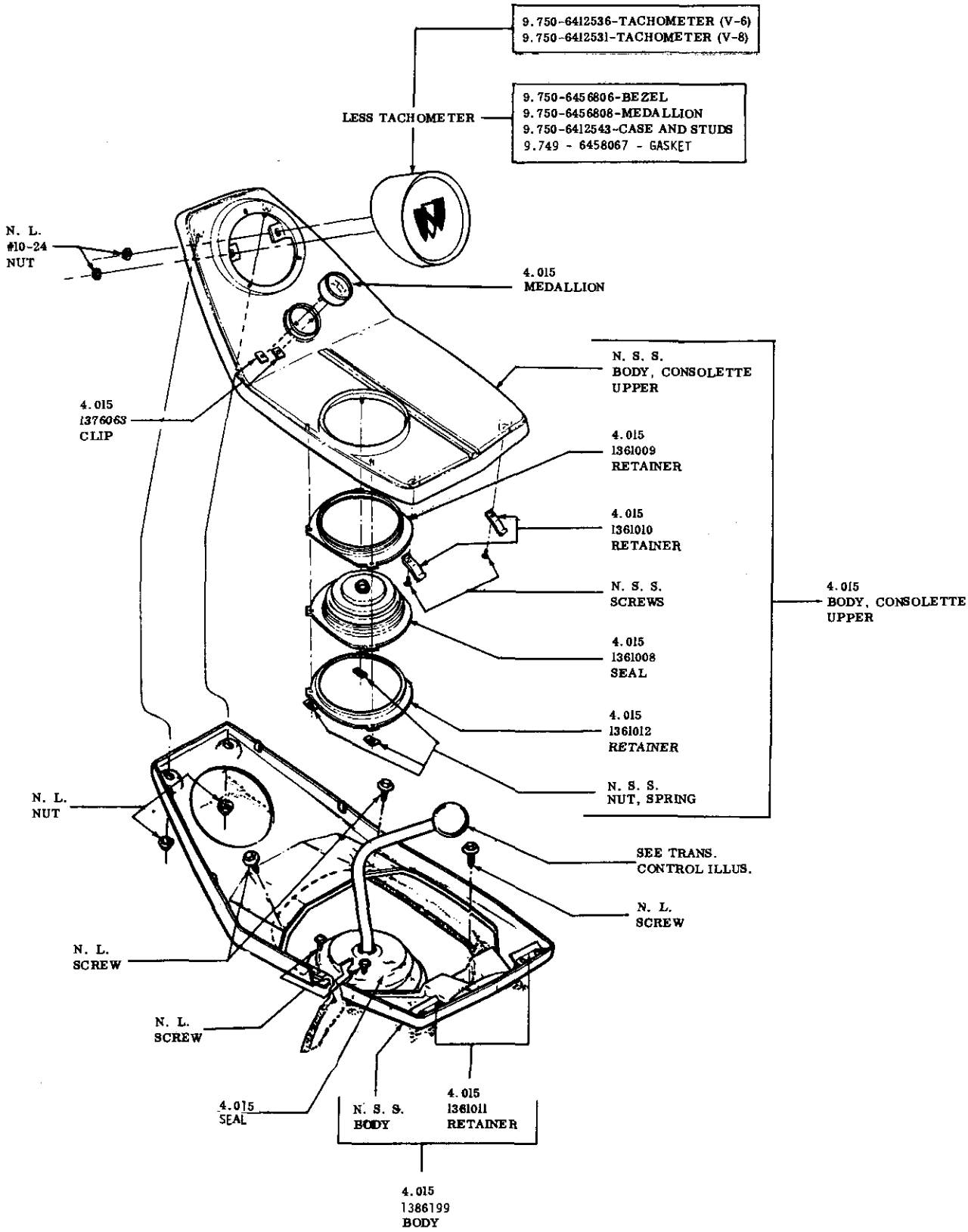

1965-1972 CONSOLETTE

MEMORANDA

4 SPEED

MANUAL

TRANSMISSION

MEMORANDA

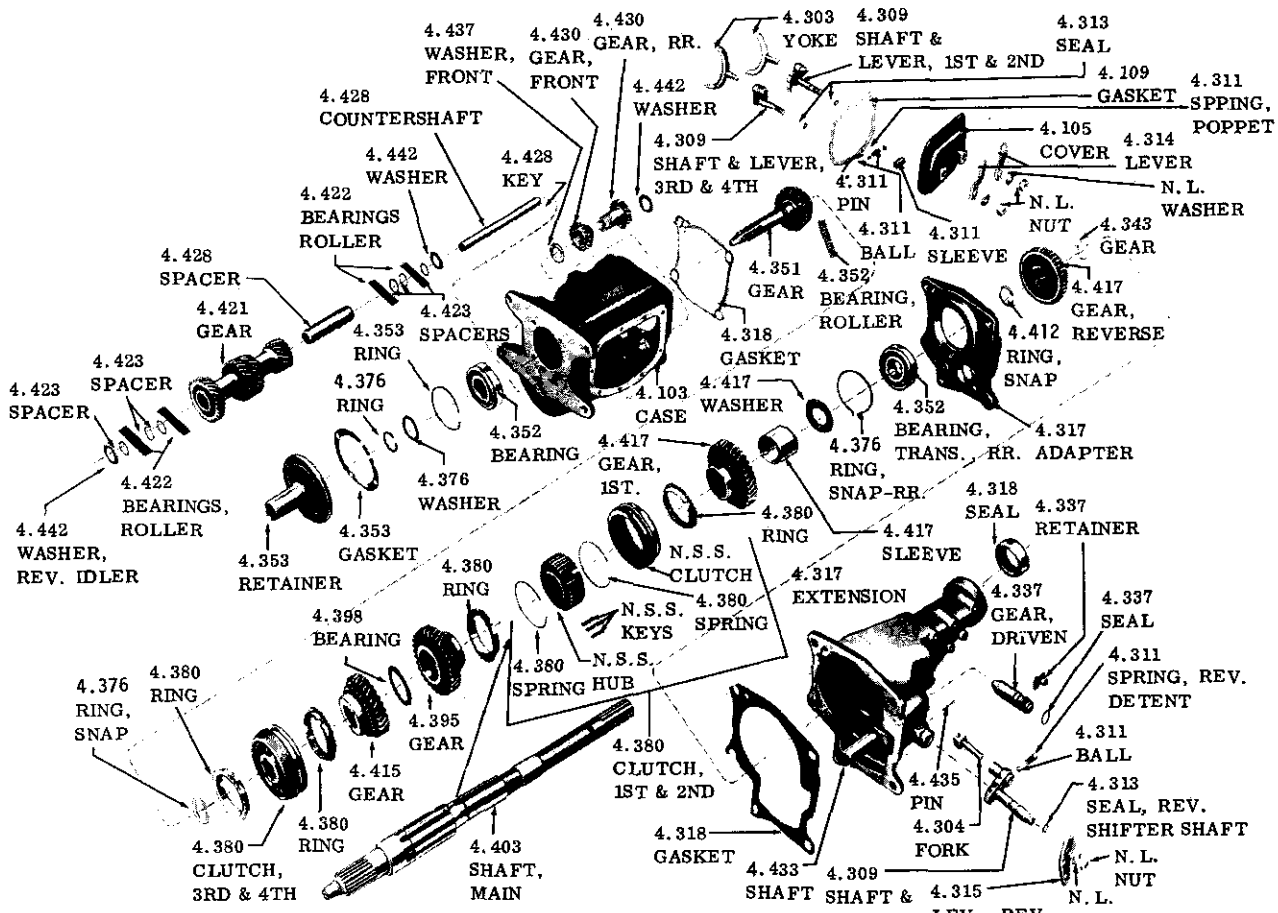

4 SPEED MANUAL TRANSMISSION
1964-1965-SPECIAL-SKYLARK
1966-1970 -GRAN SPORT

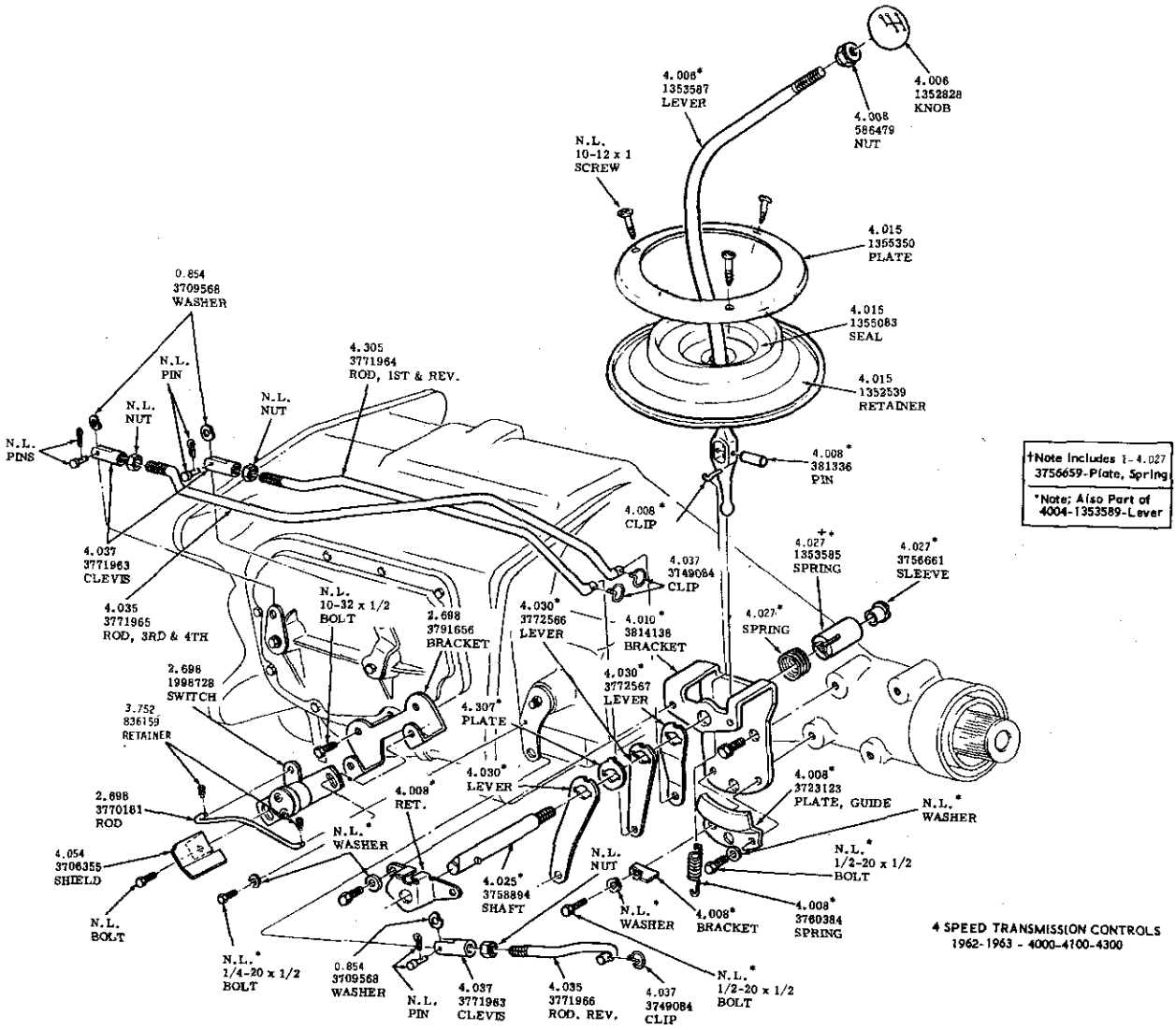

4 SPEED TRANSMISSION CONTROLS
1962-1963 - 4000-4100-4300

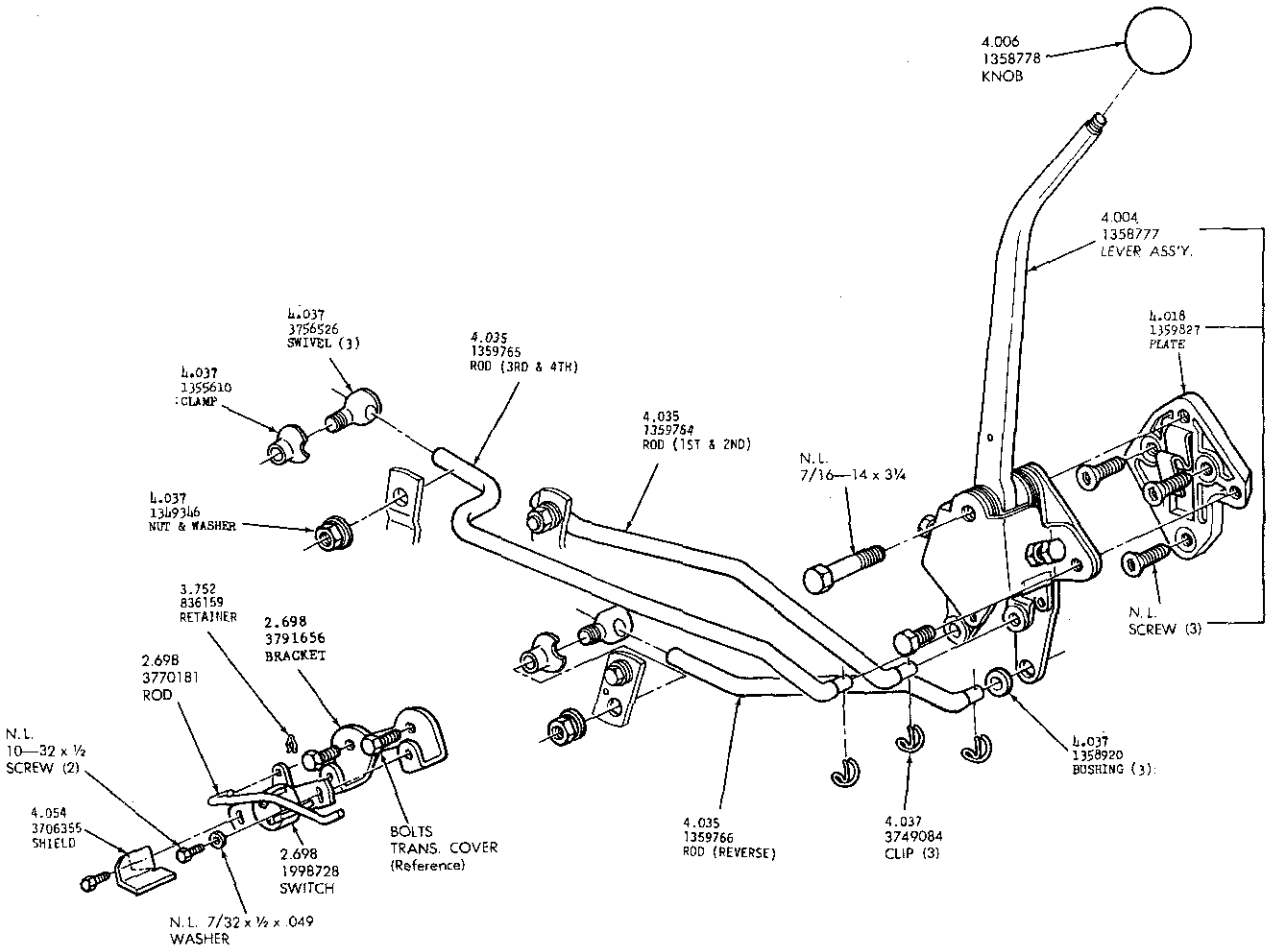

4 SPEED TRANSMISSION CONTROLS
1963 — 4400-4600-4800
4 — 4600

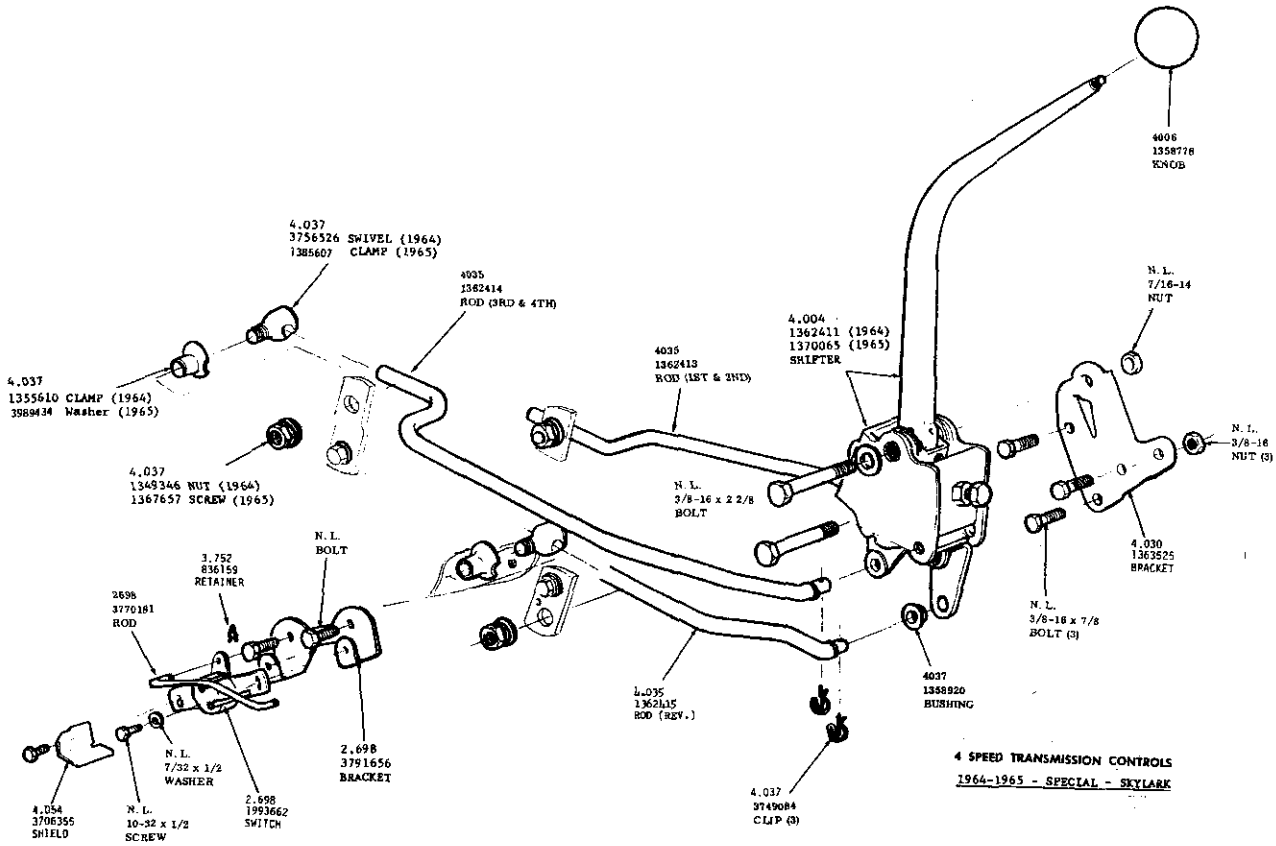

4 SPEED TRANSMISSION CONTROLS

1964-1965 - SPECIAL - SKYLARK

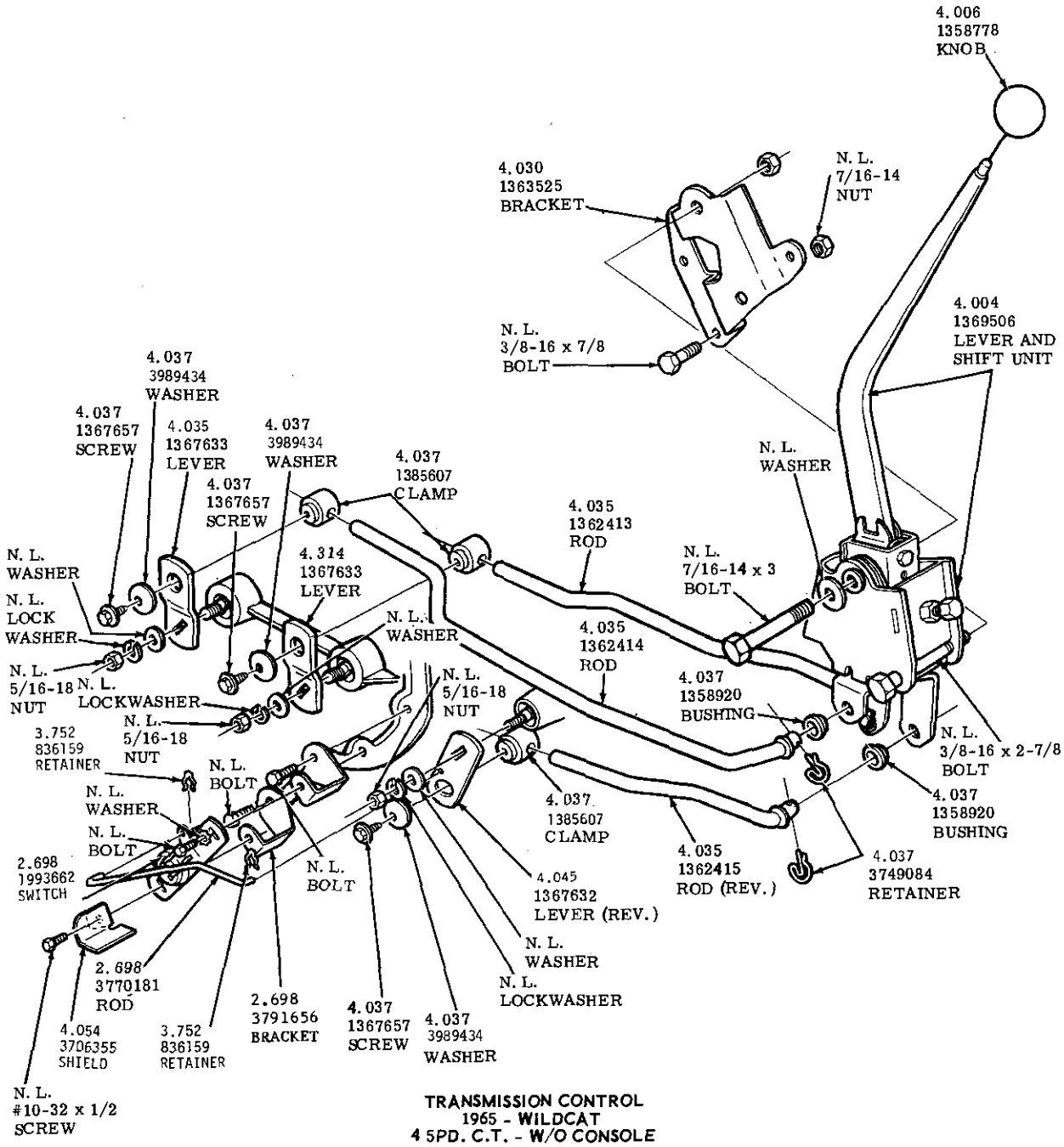

TRANSMISSION CONTROL
1965 - WILDCAT
4 SPD. C.T. - W/O CONSOLE

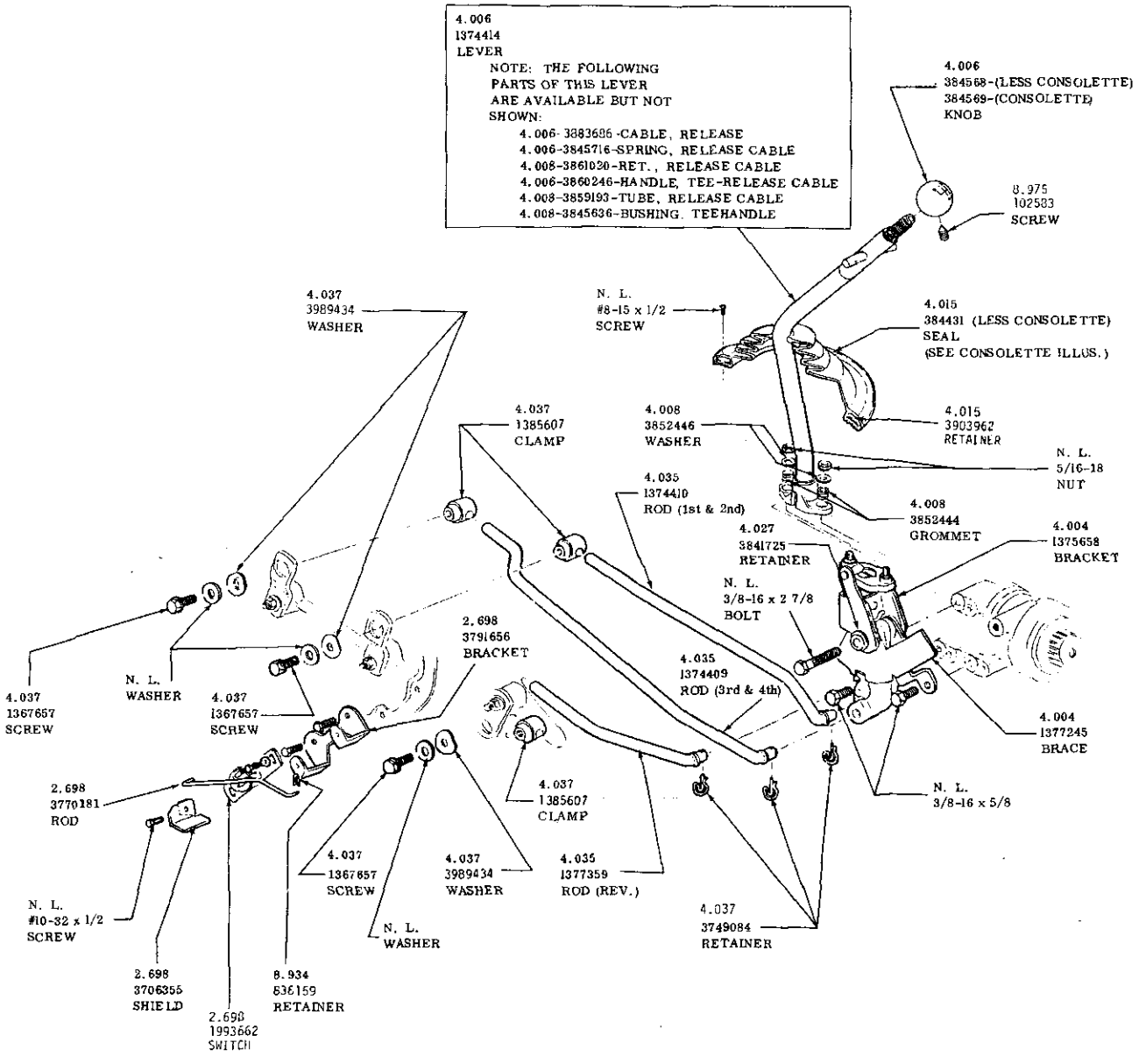

4-SPEED TRANMISSION CONTROLS
1966 SKYLARK GRAN SPORT

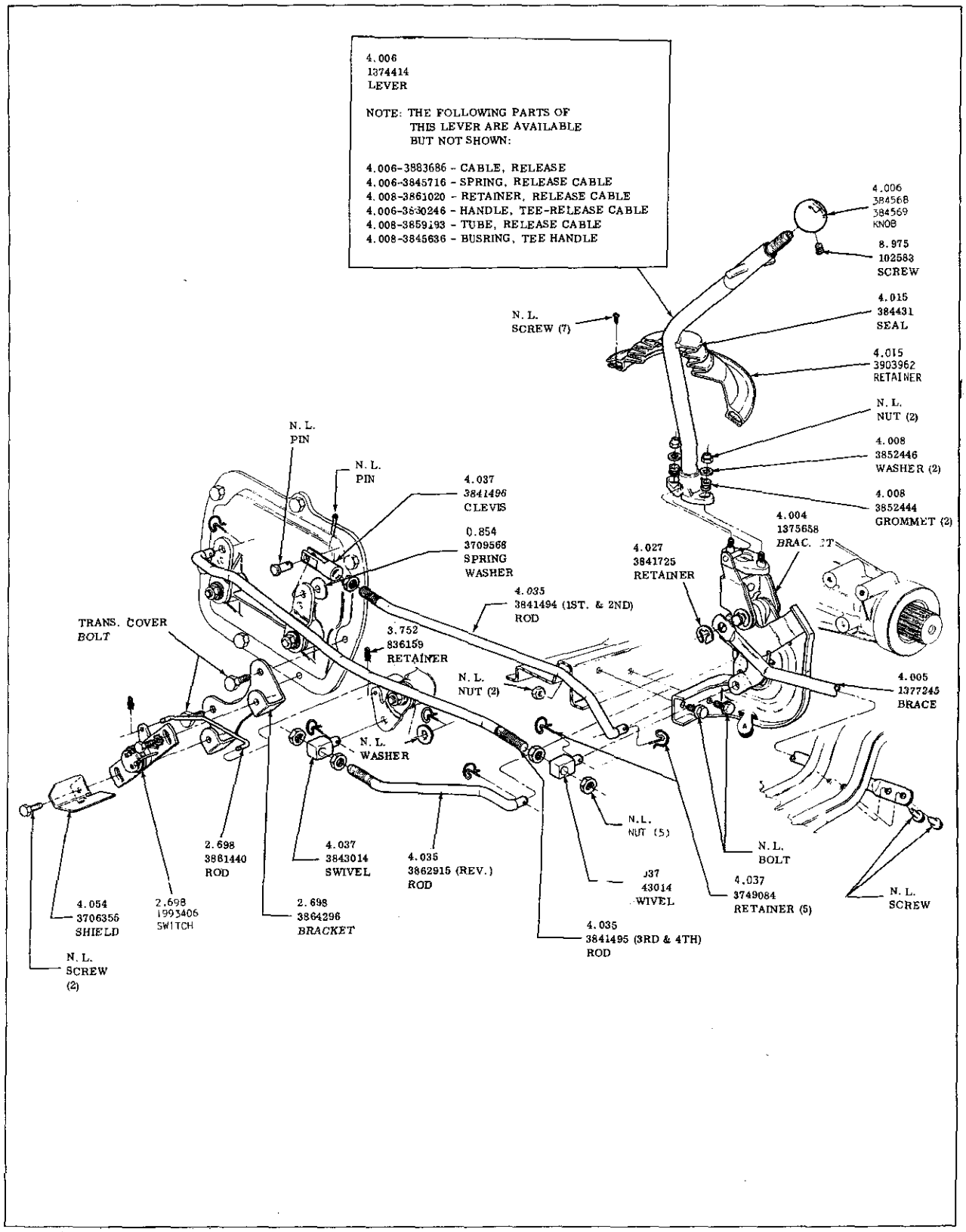

4 SPEED TRANSMISSION CONTROLS

1967—4600

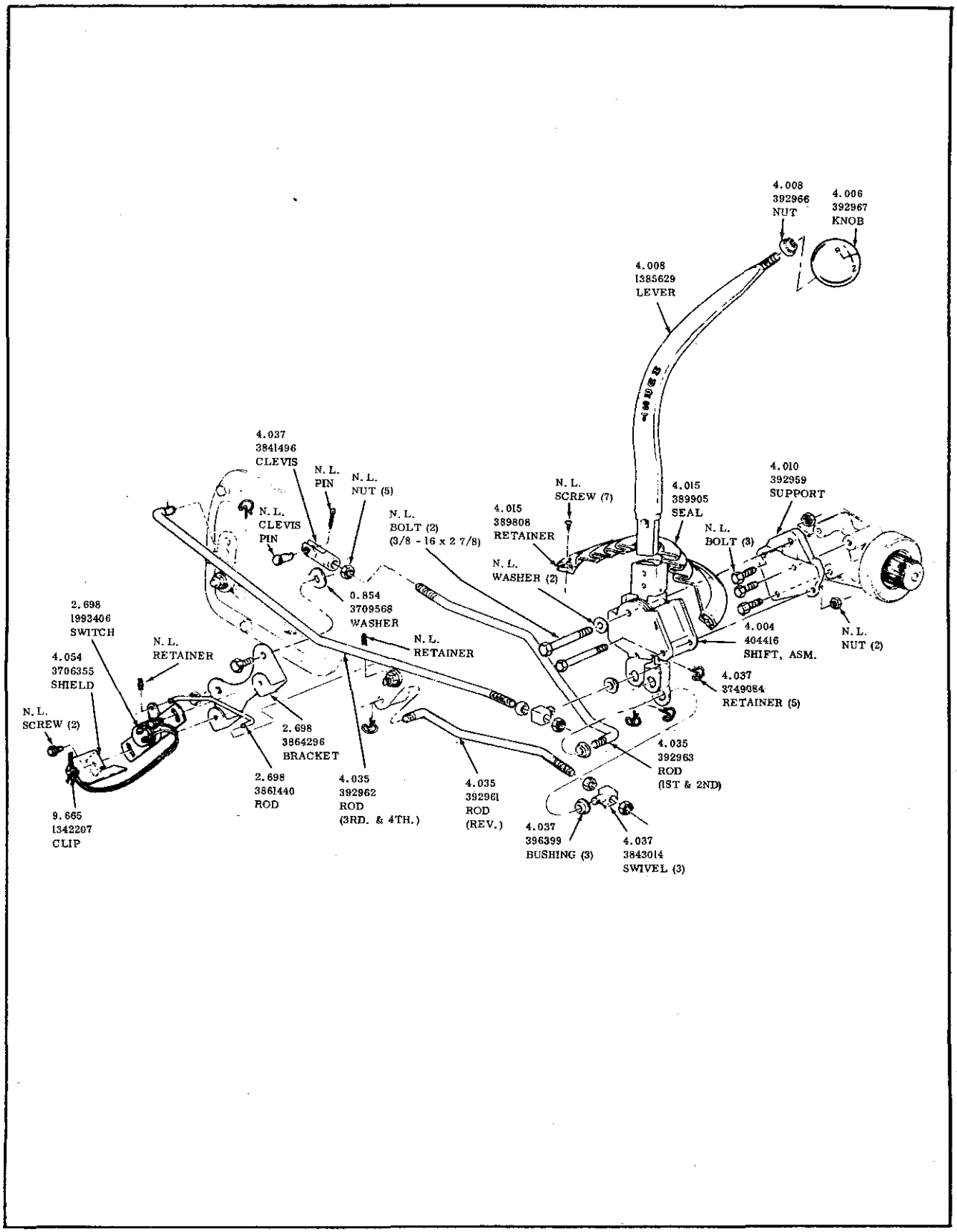

TRANSMISSION CONTROL
4 SPEED MANUAL (FLOOR SHIFT)
1968 - O. S. 400

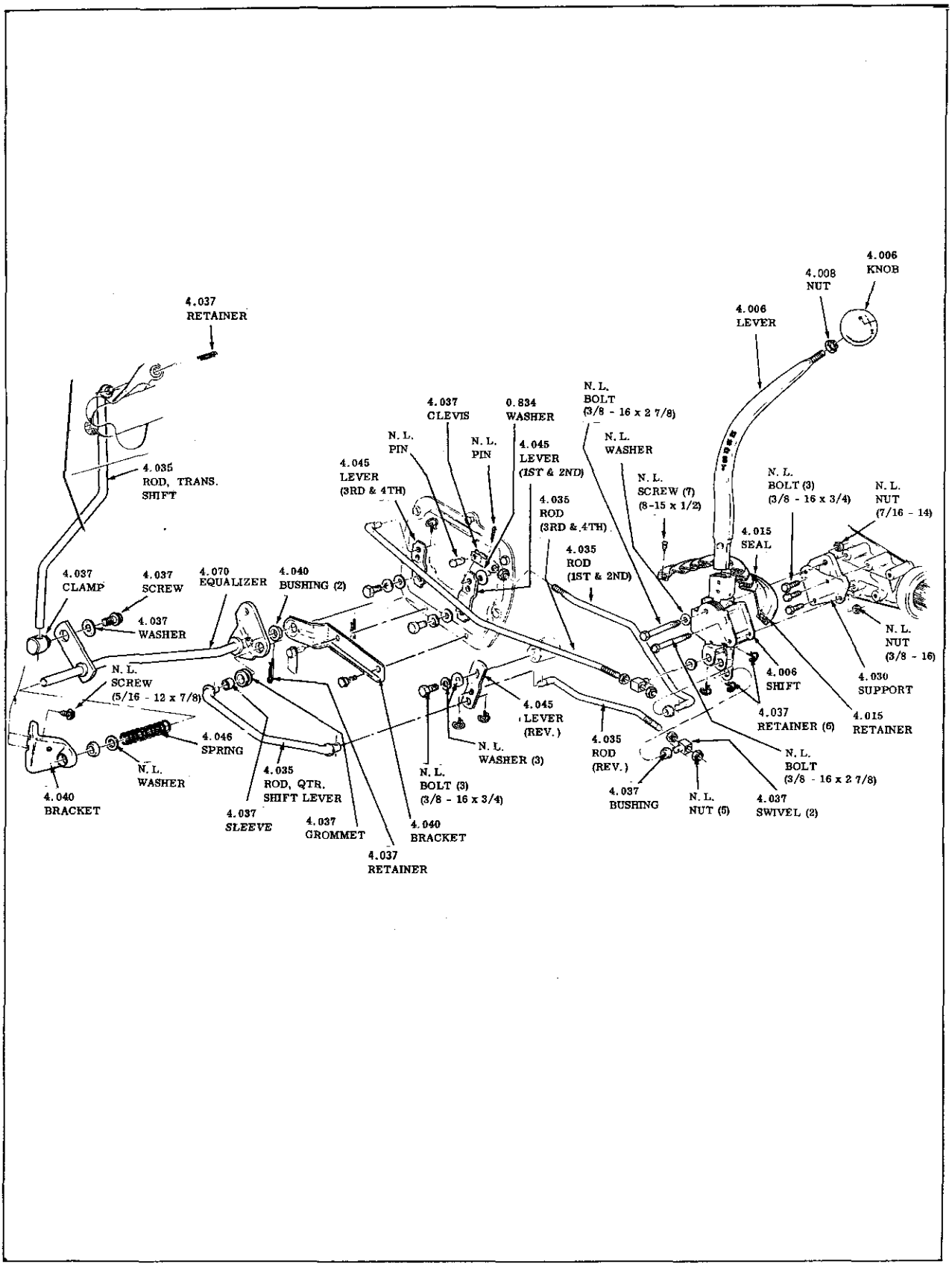

4 SPEED MANUAL (FLOOR SHIFT)
1969-1970 -G.S.-400

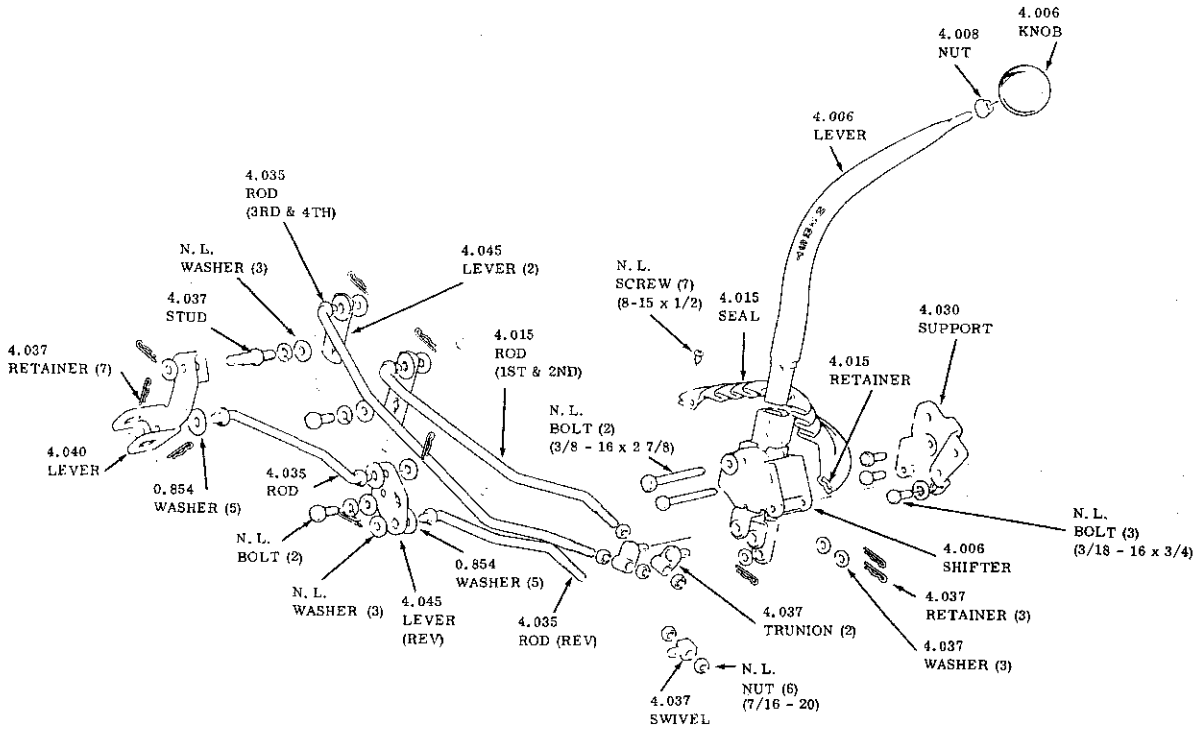

4 SPEED MANUAL (FLOOR SHIFT)
1971 - 1972 G.S. & G.S.X.

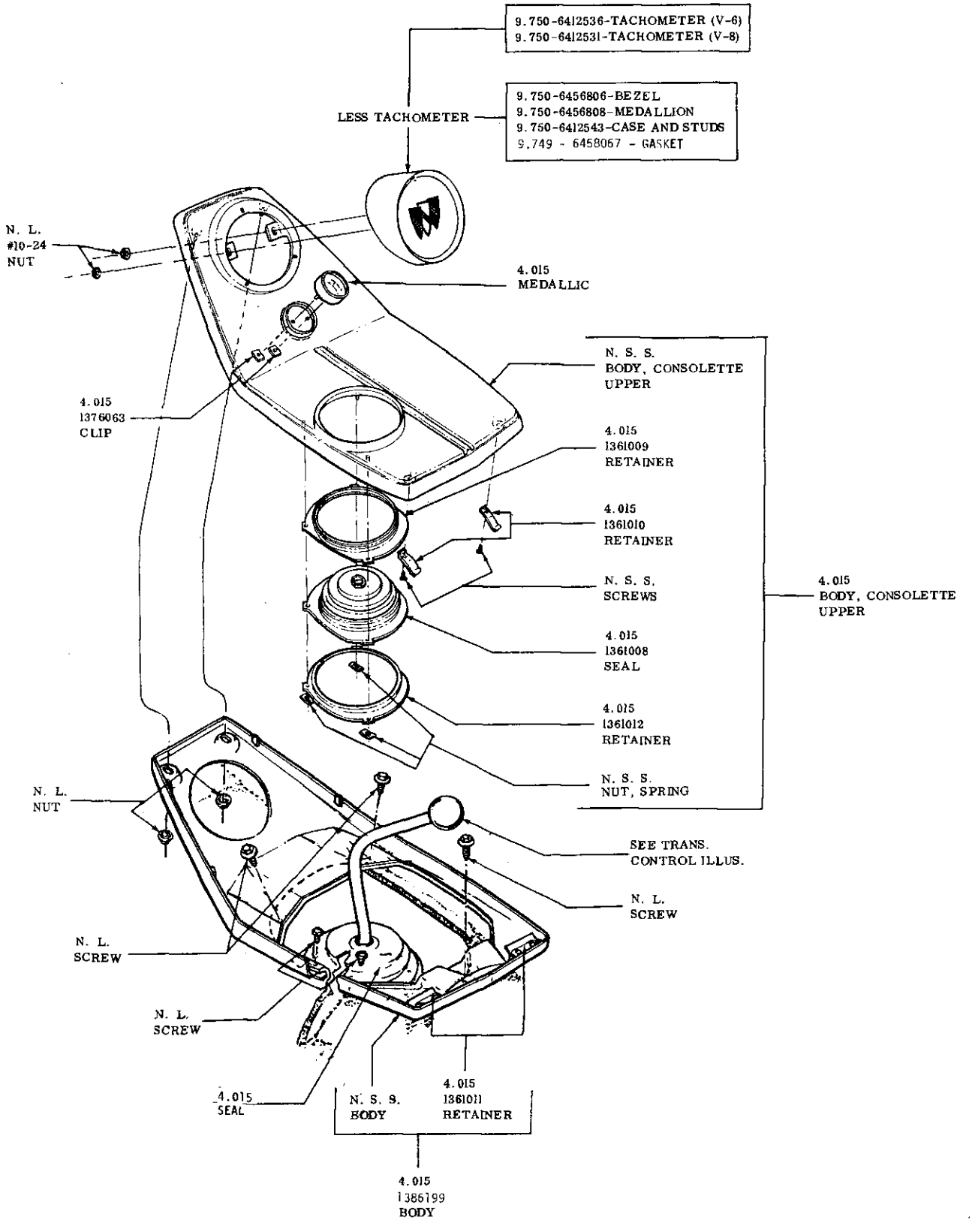

1965-1972 CONSOLETTE

MEMORANDA

DYNA-FLOW

&

TWIN TURBINE

AUTOMATIC

TRANSMISSIONS

MEMORANDA

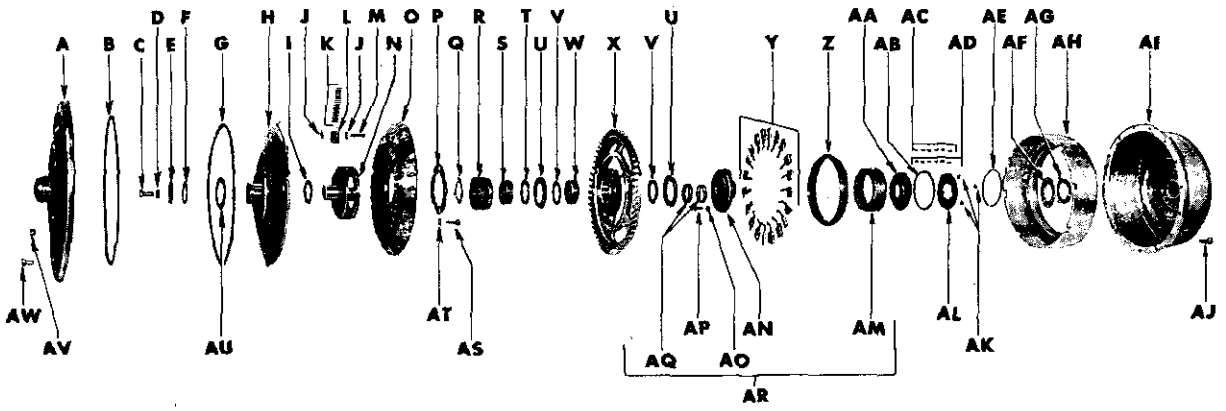

TYPICAL TORQUE CONVERTER—1956-60

A	COVER, Converter Pump	4.115
B	SEAL, Converter Pump Cover	4.115
C	BOLT, Hex. Hd—3/8-24 x 7/8—Second Turbine Retaining	8.900
D	WASHER, External Tooth Lock—3/8—Second Turbine Retaining	N.L.
E	WASHER, Second Turbine Retaining	4.127
F	WASHER, Thrust (between first turbine hub and second turbine retaining washer)	4.127
G	RING, Converter First Turbine Disc Retaining	4.127
H	DISC. AND HUB, Converter First Turbine	4.126
I	WASHER, Second Turbine Thrust	4.127
J	WASHER, Thrust (on each side of planet pinion)	4.127
K	KIT, Converter Pinion Needle Bearing Roller	4.125
L	KIT, Converter Planet Pinion	4.125
M	KIT, Converter Planet Pinion Pin	4.125
N	CARRIER, Converter Second Turbine	4.126
O	TURBINE, Converter Second	4.126
P	PLATE, Planet Pinion Lock	4.125
Q	WASHER, Sun Gear Thrust—Front	4.127
R	GEAR, Sun	4.125
S	SPRAG, Sun Gear	4.125
T	BEARING, Sun Gear	4.125
U	WASHER, Outside Stator Hub Thrust	4.117
V	BEARING, Outside Stator	4.125
W	SPRAG, Outside Stator	4.125
X	STATOR, Outer	4.117
Y	BLADE, Stator	4.117
Z	RING, Stator Blade Carrier	4.117
AA	PISTON, Stator	4.117
AB	RING, Stator Piston Sealing—Outer	4.117
AC	SPRING, Stator Free Wheel	4.117
AD	ROLLER, Stator Free Wheel Cam	4.117
AE	RING, Free Wheel Stator Cam Retaining	4.117
AF	SPACER, Stator	4.117
AG	WASHER, Stator Thrust	4.117
AH	TURBINE, First	4.126
AI	PUMP, Converter	4.115
AJ	BOLT, Converter Pump to Cover	4.115
AK	KIT, Stator Blade Carrier to Free Wheel Cam Key	4.117-4.161
AL	CAM, Stator Free Wheel	4.117
AM	CARRIER, Stator Blade—Rear	N.L.
AN	CARRIER, Stator Blade—Front	N.L.
AO	WASHER, Countersunk External Tooth Lock—1/4—Stator Blade Front Carrier to Rear Carrier	N.L.
AP	SCREW, Stator Blade Front Carrier to Rear Carrier	4.117
AQ	BUSHING, Stator Blade Front Carrier	4.117
AR	CARRIER, Stator Blade (includes front & rear carrier)	4.117
AS	BOLT, Second Turbine to Carrier Hex. Hd.	4.127
AT	WASHER, Lock—1/4—Second Turbine to Carrier	8.931
AU	WASHER, Thrust (between first turbine & pump cover)	4.127
AV	NUT, Thick Hex. Lock—5/16-24—Pump to Cover	8.917
AW	PLUG, Pump Cover Drain	4.115

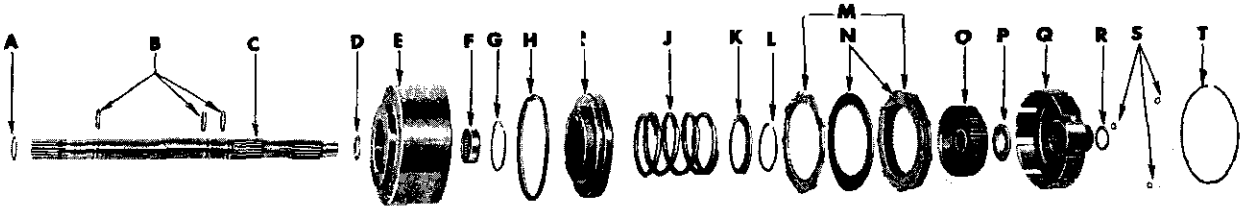

TYPICAL DIRECT DRIVE CLUTCH AND PLANETARY UNIT—1955-60 D.F.

A	RING, Converter Reaction Shaft Retaining	4.226
B	RING, Transmission Input Shaft Oil Seal	4.123
C	SHAFT, Transmission Input	4.123
D	WASHER, Clutch Hub Thrust	4.161
E	DRUM, Brake High and Low (includes oil seal ring)	4.169
F	BEARING, Clutch High and Low Brake Drum	4.169
G	RING, Clutch Piston Oil Sealing (inner)	4.167
H	SEAL, Clutch Piston (outer)	4.167
I	PISTON, High Clutch	4.166
J	SPRING, Clutch	4.164
K	SEAT, Clutch Spring	4.164
L	RING, Clutch Spring Seat Retaining	4.164
M	KIT, Clutch Plate (external splined)	4.163
N	KIT, Clutch Plate (internal splined)	4.163
O	HUB, Clutch	4.161
P	WASHER, Clutch Hub Thrust (rear)	4.161
Q	GEAR, Low Range Reaction	4.162
R	WASHER, Thrust (between reverse sun gear and reaction gear)	4.161
S	KIT, Reaction Gear Bearing Driving Key	4.161
T	RING, Reaction Gear Flange Retainer (outer)	4.162

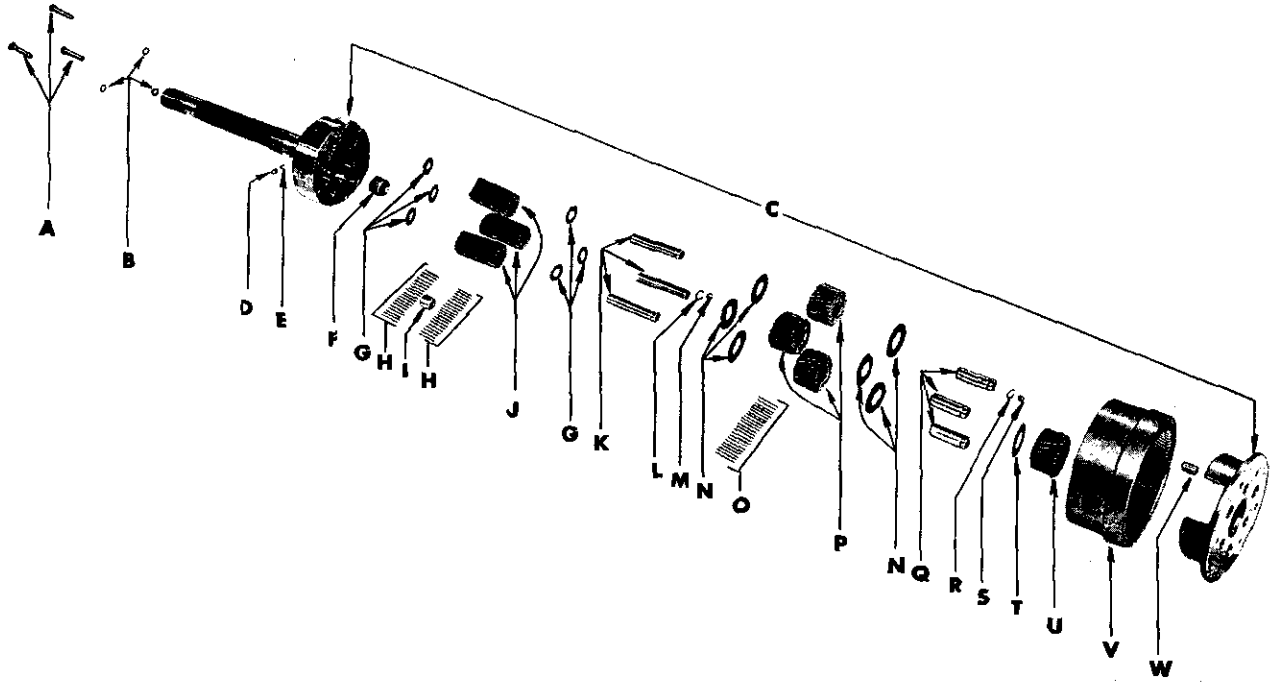

TYPICAL GEAR SET, PLANETARY (INCLUDES CARRIERS) 1948 THROUGH 1960 D.F.

A	SCREW, Front to Rear Planet Carrier	4.175
B	WASHER, Special Lock (planet carrier)	4.175
C	CARRIER, Transmission Planet (includes front & rear planet carrier only)	4.175
D	KEY, Rear Pump Drive	4.191
E	CUSHION, Rear Pump Drive Key	4.191
F	BUSHING, Planet Carrier	4.175
G	WASHER, Low Planet Pinion Thrust	4.176
H	KIT, Low Planet Roller	4.176
I	ROLLER, Spacer	4.176
J	PINION, Law Planet	4.174
K	SHAFT, Low Planet Pinion	4.175
L	RING, Low Planet Pinion Shaft Retaining	4.176
M	BALL, Steel (low planet pinion to shaft)	8.899
N	WASHER, Reverse Planet Pinion (thrust)	4.178
O	KIT, Reverse Planet Roller	4.176
P	PINION, Reverse Planet	4.174
Q	SHAFT, Reverse Planet Pinion	4.175
R	RING, Reverse Planet Shaft Retaining	4.191
S	BALL, Steel (reverse planet pinion to shaft)	8.899
T	WASHER, Reverse Sun Gear Thrust—Rear	4.178
U	GEAR, Reverse Sun	4.178
V	GEAR, Reverse Ring	4.190
W	DOWEL, Pin (front to rear planet carrier)	8.939

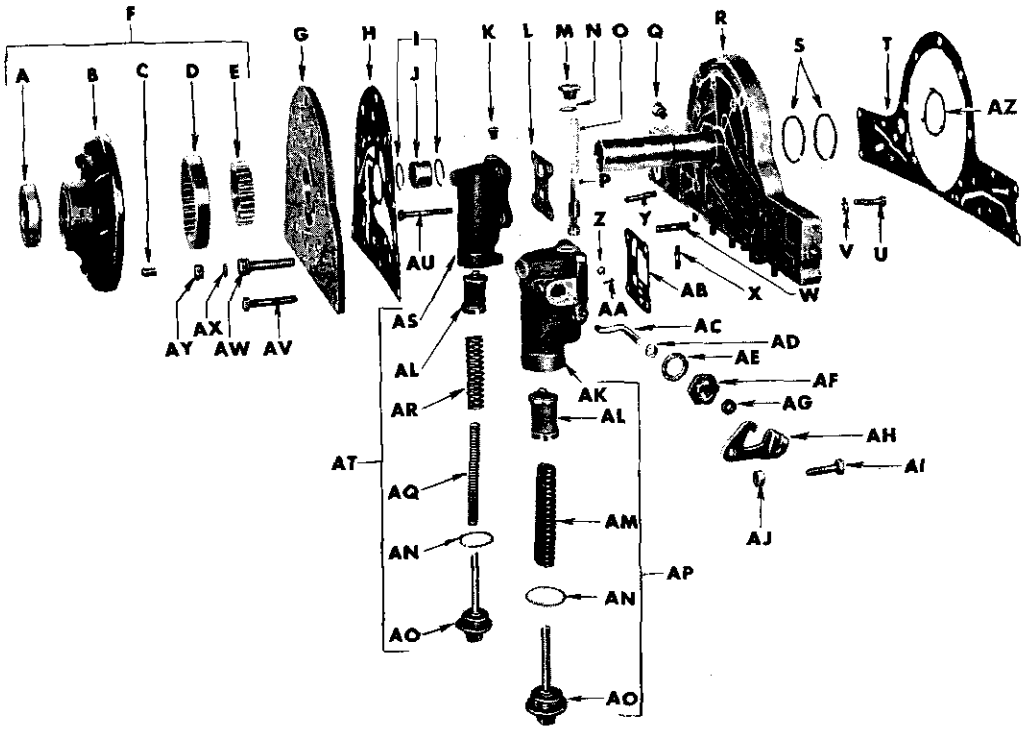

TYPICAL FRONT PUMP, ACCUMULATOR, REACTION SHAFT AND FLANGE—1955-60 D.F.

A	SEAL, Front Pump Oil	4.224
B	BODY, Front Oil Pump	N.L.
C	PIN, Dowel (front pump cover to front pump body)	4.224
D	GEAR, Front Oil Pump Driven	N.L.
E	GEAR, Front Oil Pump Driving	N.L.
F	PUMP, Front Oil (complete)	4.224
G	COVER, Front Pump	4.225
H	GASKET, Front Pump Cover	4.225
I	RING, Convertor Reaction Shaft Bearing Retaining	4.226
J	BEARING, Input Shaft	4.123
K	PLUG, Accumulator	4.115
L	GASKET, Low Accumulator Body	4.121
M	STOP, High Accumulator Stator Control Valve	4.122
N	GASKET, High Accumulator Stator Control Valve Stop	4.122
O	VALVE, High Accumulator Stator Control	4.122
P	SPRING, High Accumulator Stator Control Valve	4.122
Q	CONNECTOR, Oil Cooler Pipe (in reaction flange)	8.963
R	SHAFT AND FLANGE, Convertor Reaction	4.226
S	RING, Clutch Oil Sealing	4.123
T	GASKET, Reaction Shaft Flange	4.226
U	BOLT, Front Pump Body to Reaction Shaft Flange	4.226
V	LOCK, Front Pump Body to Reaction Shaft Flange Bolt	4.226
W	STUD, Front Pump Cover	4.226
X	STUD, Oil Pan to Reaction Shaft Flange	4.226
Y	STUD, Accumulator	4.226
Z	BALL, Steel—High Accumulator Dump Valve (4.121)	8.899
AA	PIN, Dump Valve Retaining	N.L.
AB	GASKET, High Accumulator Body	4.121
AC	CRANK, High Accumulator Stator Control Valve	4.122
AD	WASHER, High Accumulator Stator Control Valve Crank	4.122
AE	GASKET, High Accumulator Stator Control Valve Crank Bearing	4.122
AF	BEARING, High Accumulator Stator Control Valve Crank	4.122
AG	SEAL, High Accumulator Control Valve Crank Oil	4.122
AH	LEVER, High Accumulator Stator Control Valve Operating	4.122
AI	BOLT, Hex. Head—1/4-28 x 1—High Accumulator Stator Control Valve Crank Operating Lever to Crank	N.L.
AJ	NUT, Hex.—1/4-28—High Accumulator Stator Control Valve Crank Operating Lever to Crank	N.L.
AK	BODY, High Accumulator	N.L.
AL	PISTON, Accumulator	N.L.
AM	SPRING, High Accumulator Piston	4.122
AN	GASKET, Accumulator Body Cap	4.122
AO	CAP, Accumulator Body	4.122
AP	ACCUMULATOR, High (complete)	4.122
AQ	SPRING, Low Accumulator Piston (inner)	4.122
AR	SPRING, Low Accumulator Piston (outer)	4.122
AS	BODY, Low Accumulator	N.L.
AT	ACCUMULATOR, Low (complete)	4.121
AU	BOLT, Low Accumulator to Transmission	4.121
AV	BOLT, Hex. Head—3/8-16 x 1 7/8—Front Pump Cover to Transmission Case	8.900
AW	BOLT, Hex. Head—5/16-18 x 1 3/4—Front Pump Cover to Transmission Case	8.900
AX	WASHER, Lock—5/16—Front Pump Cover and Reaction Shaft Flange to Transmission Case	8.931
AY	NUT, Hex.—5/16-24—Front Pump Cover and Reaction Shaft Flange to Transmission Case	8.915
AZ	WASHER, High Clutch Thrust	4.166

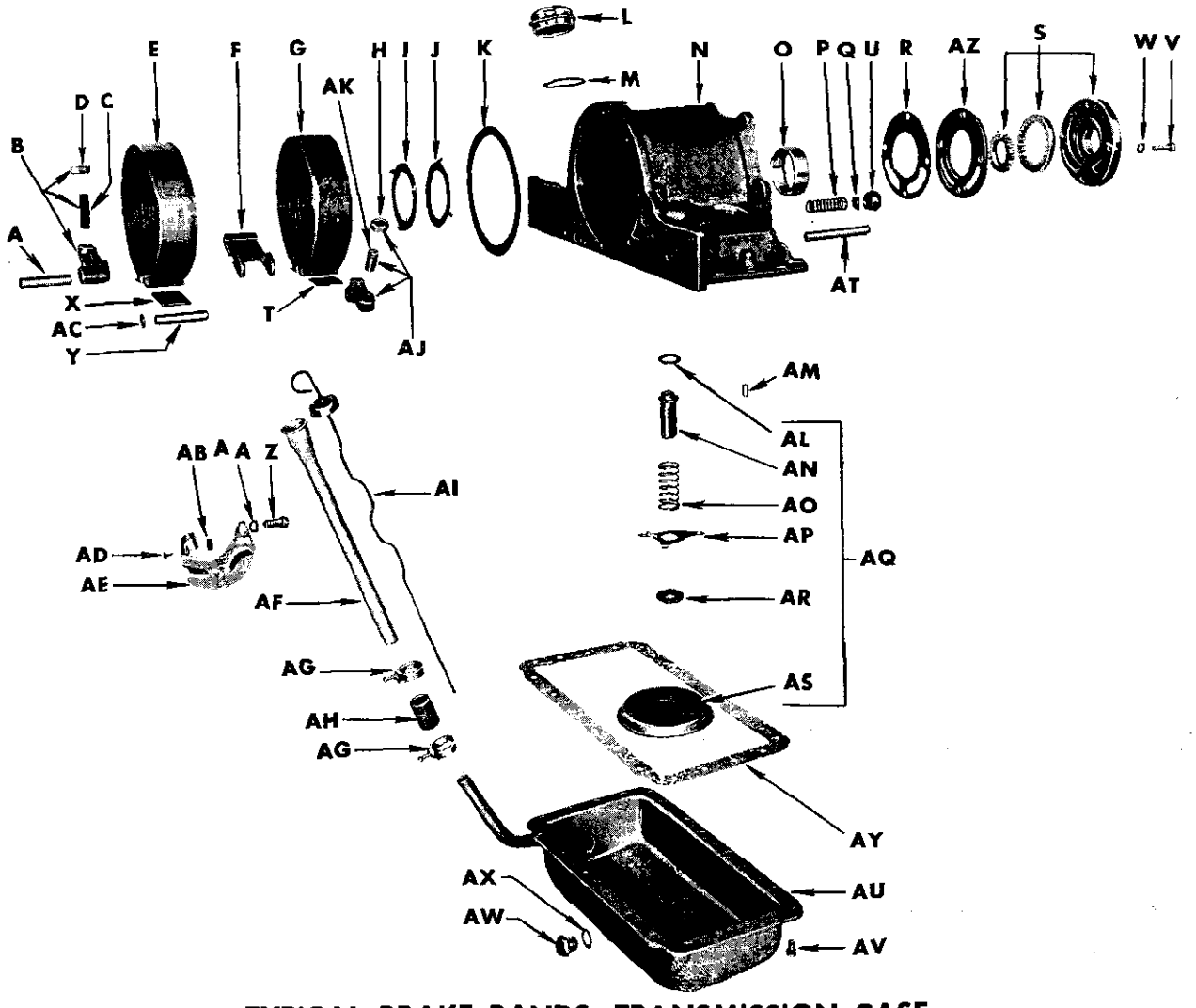

TYPICAL BRAKE BANDS, TRANSMISSION CASE AND REAR PUMP—1948 THROUGH 1960 D.F.

A	SHAFT, Low Brake Band Operating Lever	4.254
B	LEVER, Screw and Nut, Low Brake Band Operating	4.253
C	SCREW, Low Brake Band Adjusting	4.253
D	NUT, Low Brake Band Adjusting Screw	8.916
E	BAND, Low Brake	4.251
F	ANCHOR, Reverse Brake Band	4.251
G	BAND, Reverse Brake	4.251
H	NUT, Reverse Brake Band Adjusting Screw	8.916
I	WASHER, Planet Carrier Thrust (front)	4.176
J	WASHER, Planet Carrier Thrust (rear)	4.176
K	WASHER, Reverse Ring Gear Thrust (rear)	4.190
L	COVER, Brake Band Adjustment	4.127
M	GASKET, Brake Band Adjustment Cover	4.127
N	CASE, Transmission	4.103
O	BUSHING, Transmission Case	4.104
P	SPRING, Lubrication Oil Pressure Regulator	4.216
Q	VALVE, Lubrication Oil Pressure Regulator	4.216
R	GASKET, Rear Pump Plate	4.201
S	BODY AND GEARS, Rear Oil Pump	4.200
T	STRUT, Reverse Brake Band Operating	4.253
U	SEAT, Lubrication Oil Pressure Regulator Valve	4.216
V	BOLT, Hex. Hd.	8.900
W	WASHER, Lock	8.931
X	STRUT, Low Brake Band	4.252
Y	ANCHOR, Low Brake Band	4.254
Z	BOLT, Hex. Head	8.900
AA	WASHER, Lock	8.931
AB	NUT, Spring,	8.921
AC	PLUG, Expansion	8.970
AD	SCREW, Tapping	N.L.
AE	BRACKET, Transmission Oil Filler Pipe	4.132
AF	PIPE, Transmission Oil Filler—Upper	4.132
AG	CLAMP, Hose	4.132
AH	HOSE, Transmission Oil Filler Pipe Connector	4.132
AI	ROD, Transmission Oil Gauge	4.133
AJ	LEVER, Screw and Nut, Reverse Brake Band Operating	4.253
AK	SCREW, Reverse Brake Band Adjusting	4.253
AL	GASKET, Oil Suction Pipe	4.197
AM	PIN, Dowel	N.L.
AN	PIPE, Oil Suction	4.197
AO	SPRING, Oil Suction Pipe Retaining	4.197
AP	SUPPORT, Oil Suction Pipe Spring	4.197
AQ	PACKAGE, Oil Screen Assembly and Suction Pipe	4.197
AR	GROMMET, Oil Suction Pipe	4.197
AS	OIL SCREEN	N.L.
AT	SHAFT, Reverse Brake Band Anchor	4.253
AU	PAN, Transmission Case Oil	4.195
AV	BOLT, Oil Pan to Transmission Case	4.196
AW	PLUG Transmission Oil Pan Drain	1.453
AX	GASKET, Transmission Oil Pan Drain Plug	1.456
AY	GASKET, Transmission Case Oil Pan	4.196
AZ	PLATE, Rear Pump	4.201

(* INCLUDED IN SHAFT, FLANGE AND STUDS-)
CONVERTER REACTION - GP. 4.226

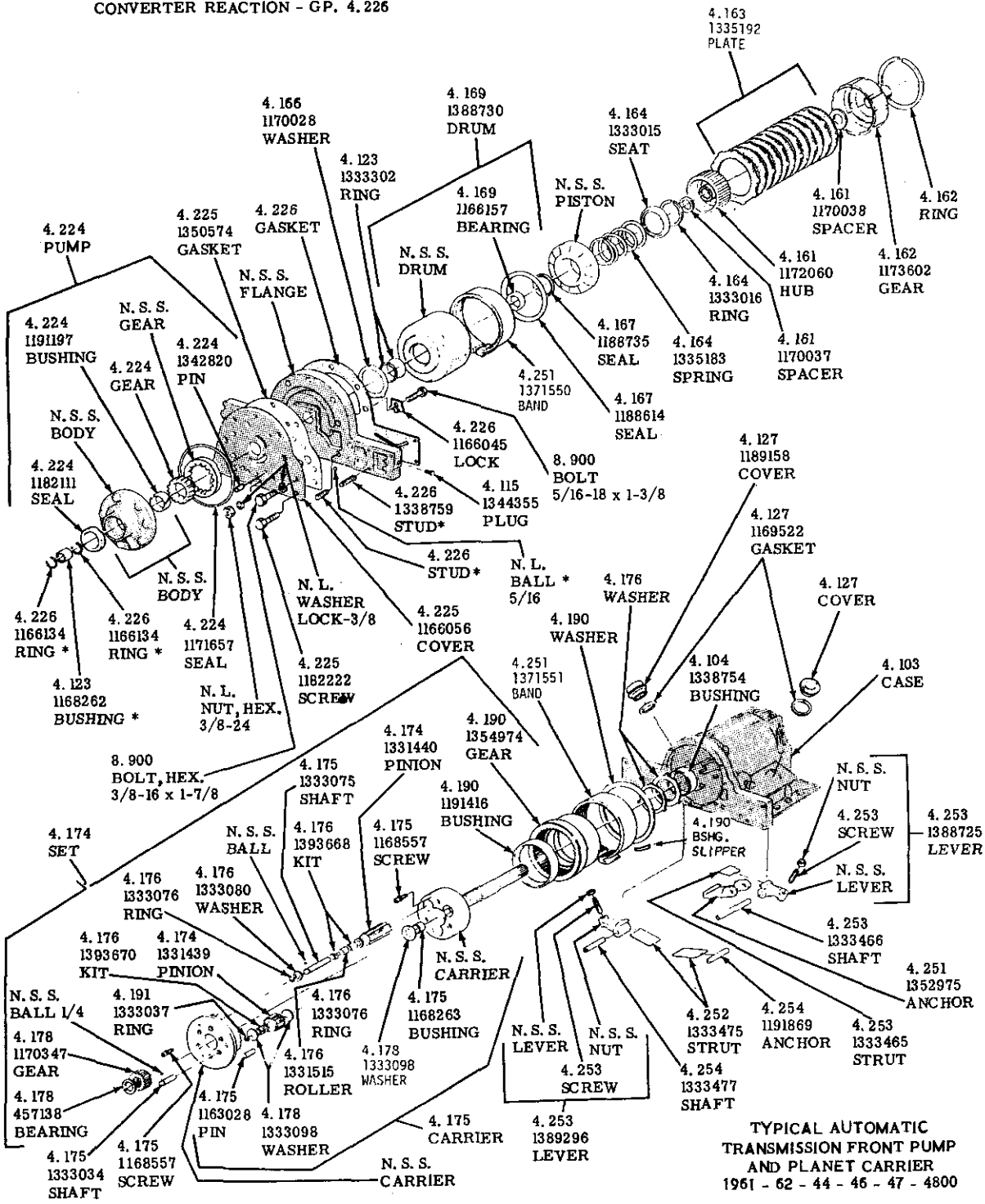

TYPICAL AUTOMATIC
TRANSMISSION FRONT PUMP
AND PLANET CARRIER
1961 - 62 - 44 - 46 - 47 - 4800

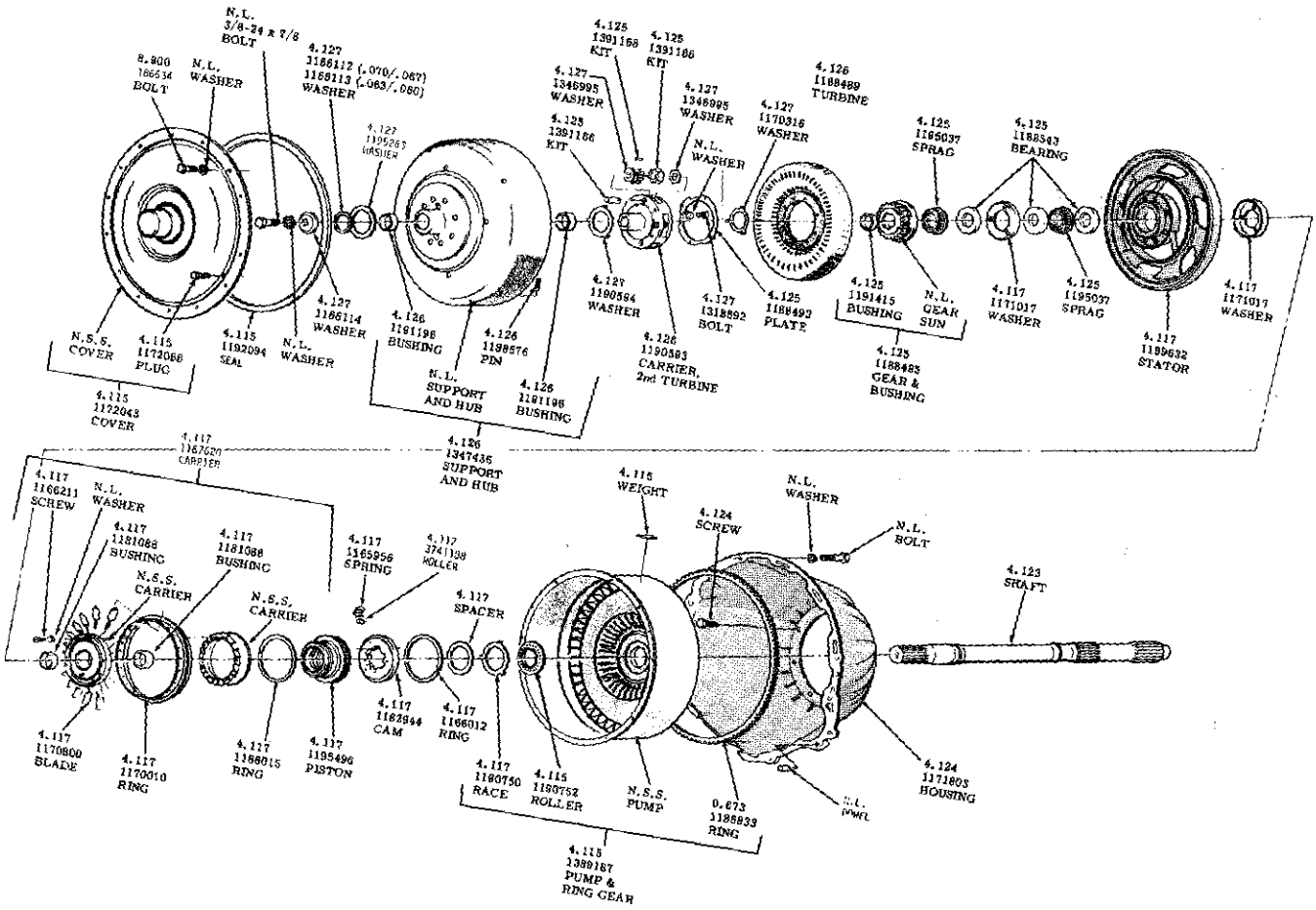
8.800
186534
BOLT
N.L.
WASHER
N.L.
3/8-24 x 7/8
BOLT
4.127
1186112 (.070/.067)
1186113 (.063/.060)
WASHER
4.127
1195265
WASHER
4.125
1391166
KIT
4.125
1391166
KIT
4.127
1346995
WASHER
4.127
1346995
WASHER
4.126
1188489
TURBINE
4.127
1170316
WASHER
4.125
1195037
SPRAG
4.125
1188543
BEARING
N.L.
WASHER
4.125
1391166
KIT
N.S.S.
COVER
4.115
1172066
PLUG
4.115
1172063
COVER
4.115
1192094
SEAL
N.L.
WASHER
4.127
1186114
WASHER
4.126
1191196
BUSHING
4.126
1198576
PIN
N.L.
SUPPORT
AND HUB
4.126
1191196
BUSHING
4.126
1347436
SUPPORT
AND HUB
4.127
1190564
WASHER
4.126
1190583
CARRIER,
2nd TURBINE
4.127
1318892
BOLT
4.125
1188492
PLATE
4.125
1191415
BUSHING
N.L.
GEAR
SUN
4.125
1188483
GEAR &
BUSHING
4.117
1171017
WASHER
4.125
1195037
SPRAG
4.117
1189632
STATOR
4.117
1171017
WASHER
4.117
1167620
CARRIER
4.117
1166211
SCREW
N.L.
WASHER
4.117
1181088
BUSHING
4.117
1181088
BUSHING
N.S.S.
CARRIER
N.S.S.
CARRIER
4.117
1165956
SPRING
4.117
3741138
ROLLER
4.117
SPACER
4.115
WEIGHT
4.124
SCREW
N.L.
WASHER
N.L.
BOLT
4.123
SHAFT
4.117
1170800
BLADE
4.117
1170010
RING
4.117
1186015
RING
4.117
1195496
PISTON
4.117
1162944
CAM
4.117
1166012
RING
4.117
1190750
RACE
4.115
1190752
ROLLER
N.S.S.
PUMP
0.673
1188939
RING
N.L.
DOWEL
4.124
1171803
HOUSING
4.115
1389187
PUMP &
RING GEAR

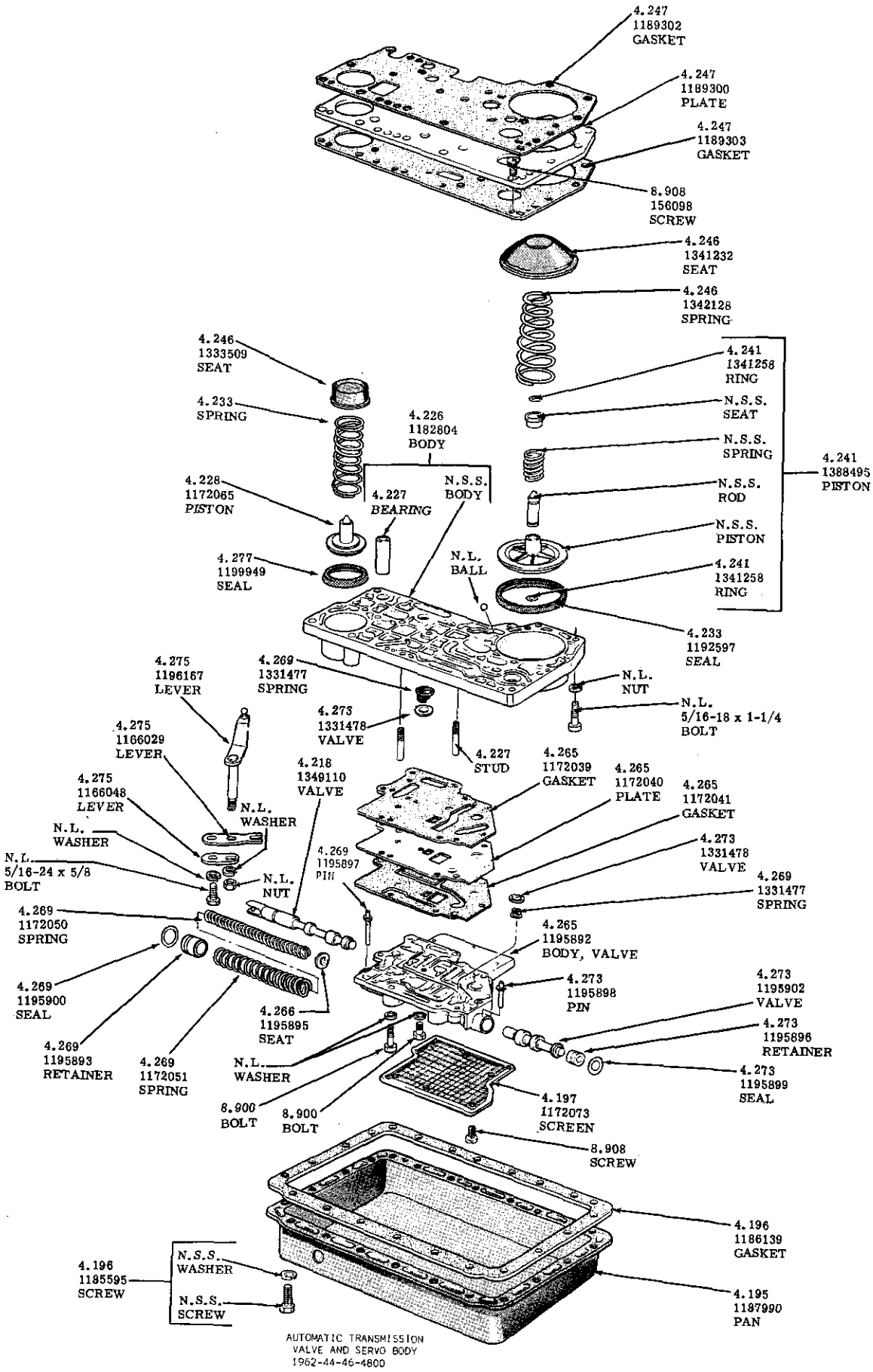

AUTOMATIC TRANSMISSION
VALVE AND SERVO BODY
1962-44-46-4800

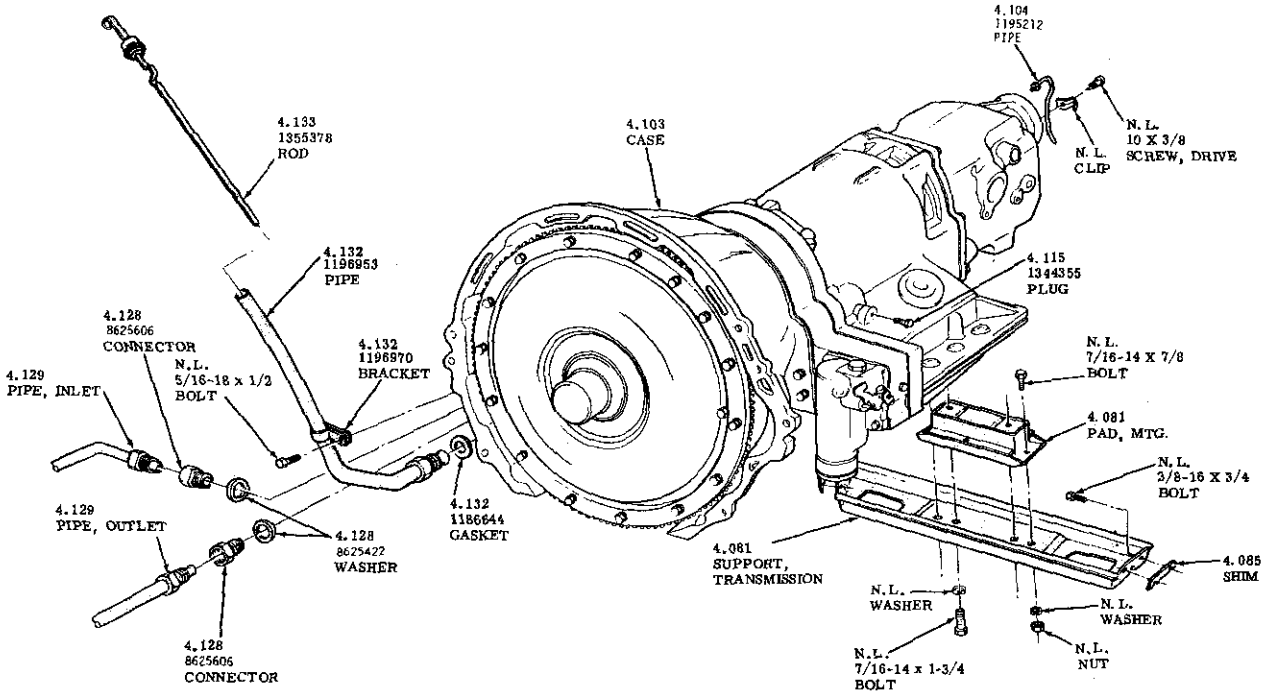

EXTERIOR COMPONENTS
1962-1963-4400-4600-4800
AUTOMATIC TRANSMISSION

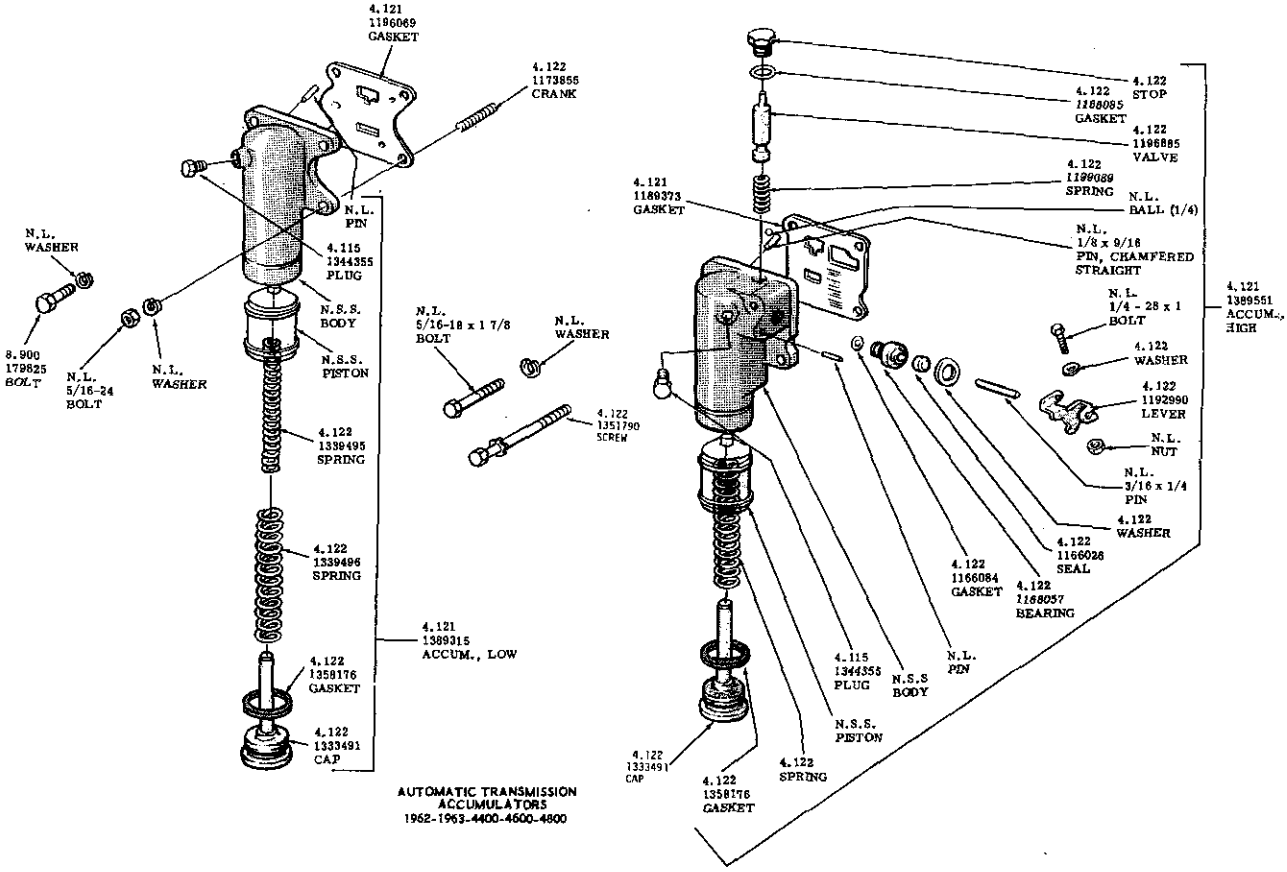

AUTOMATIC TRANSMISSION
ACCUMULATORS
1962-1963-4400-4600-4800

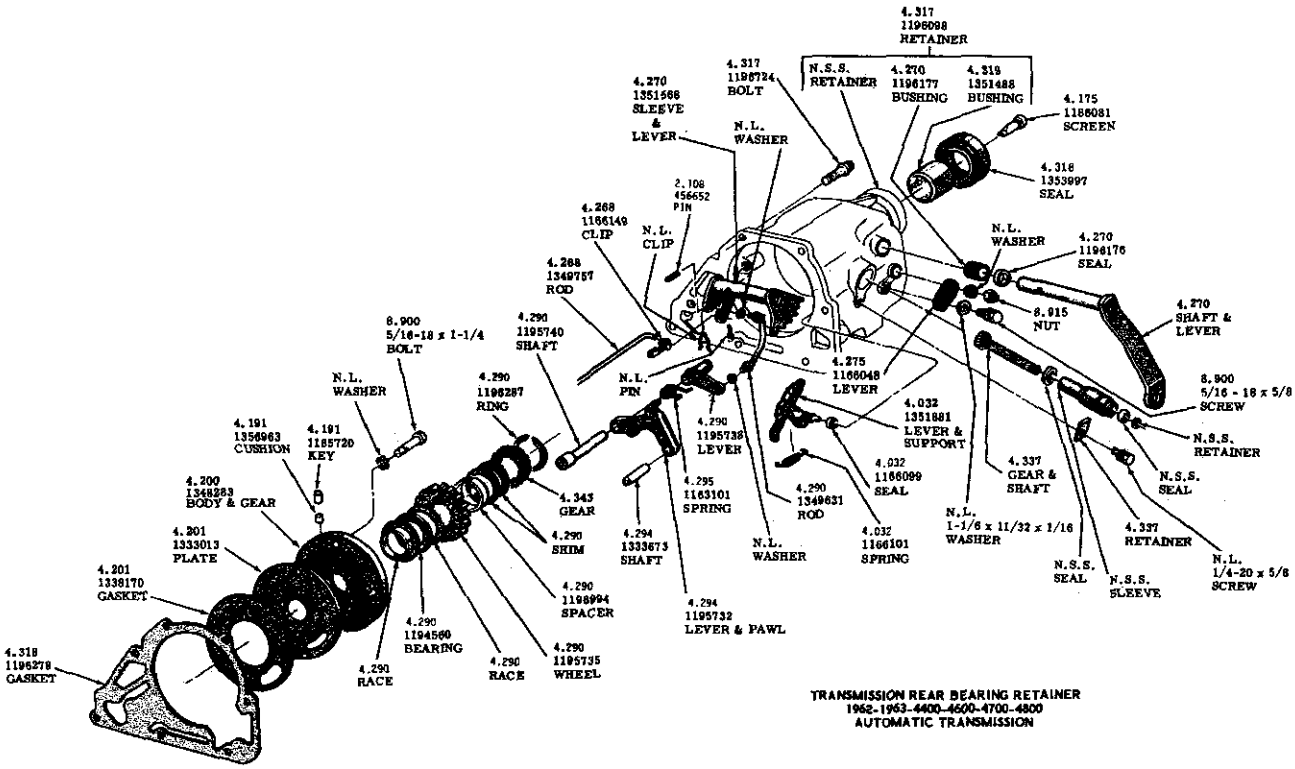

TRANSMISSION REAR BEARING RETAINER
1962-1963-4400-4600-4700-4800
AUTOMATIC TRANSMISSION

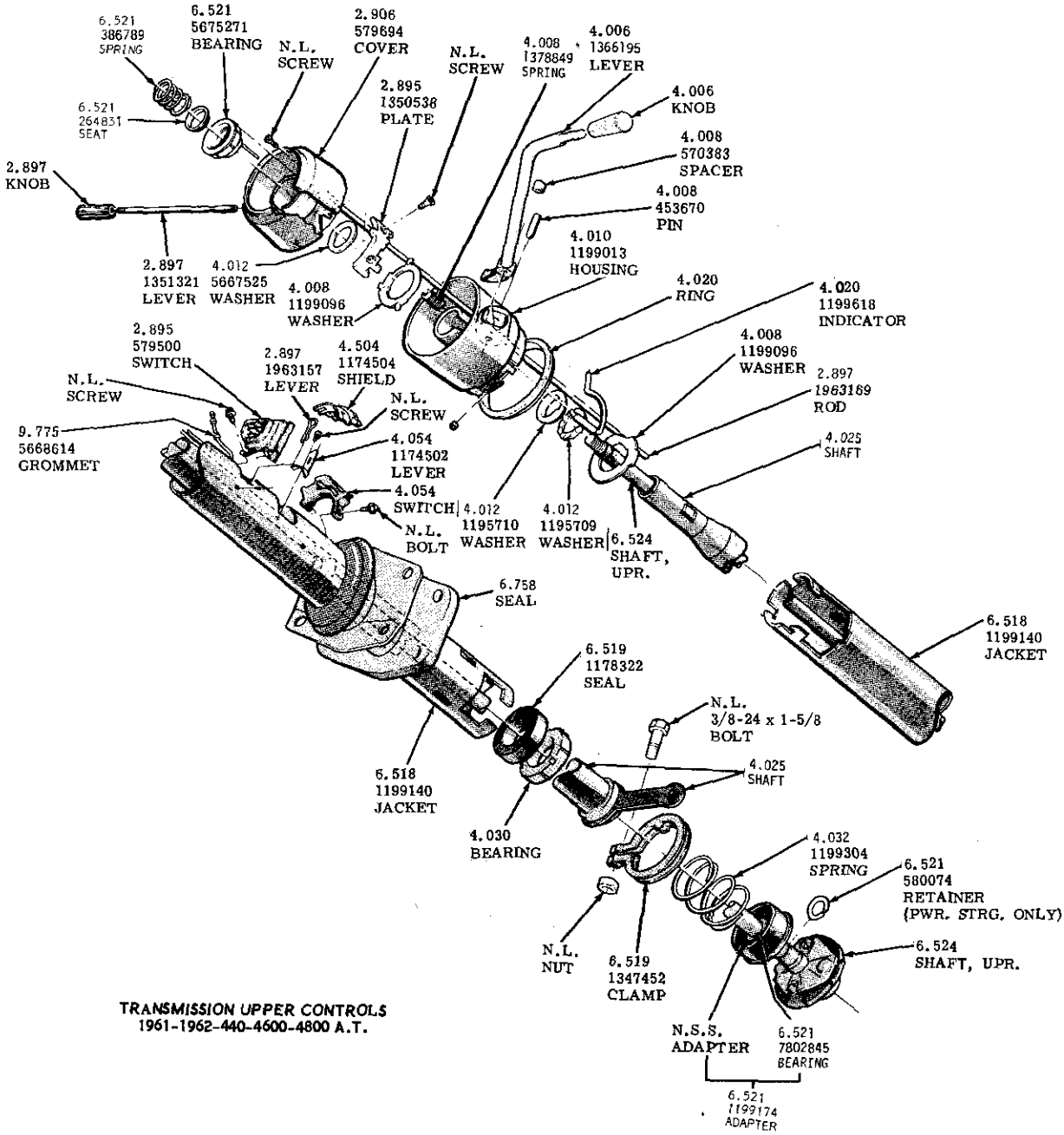

TRANSMISSION UPPER CONTROLS
1961-1962-440-4600-4800 A.T.

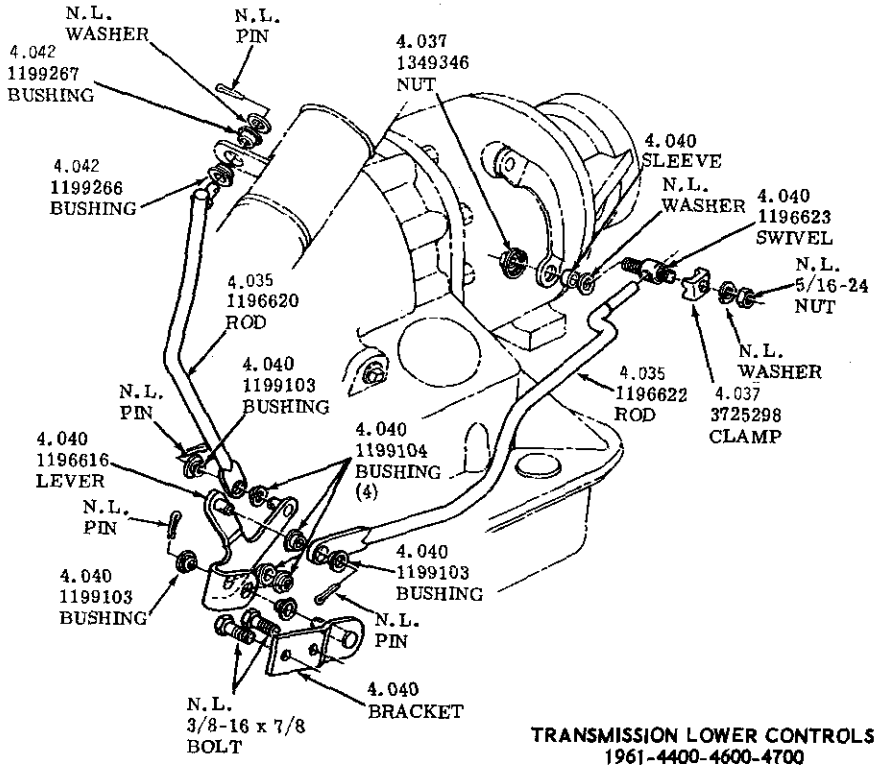

TRANSMISSION LOWER CONTROLS
1961-4400-4600-4700

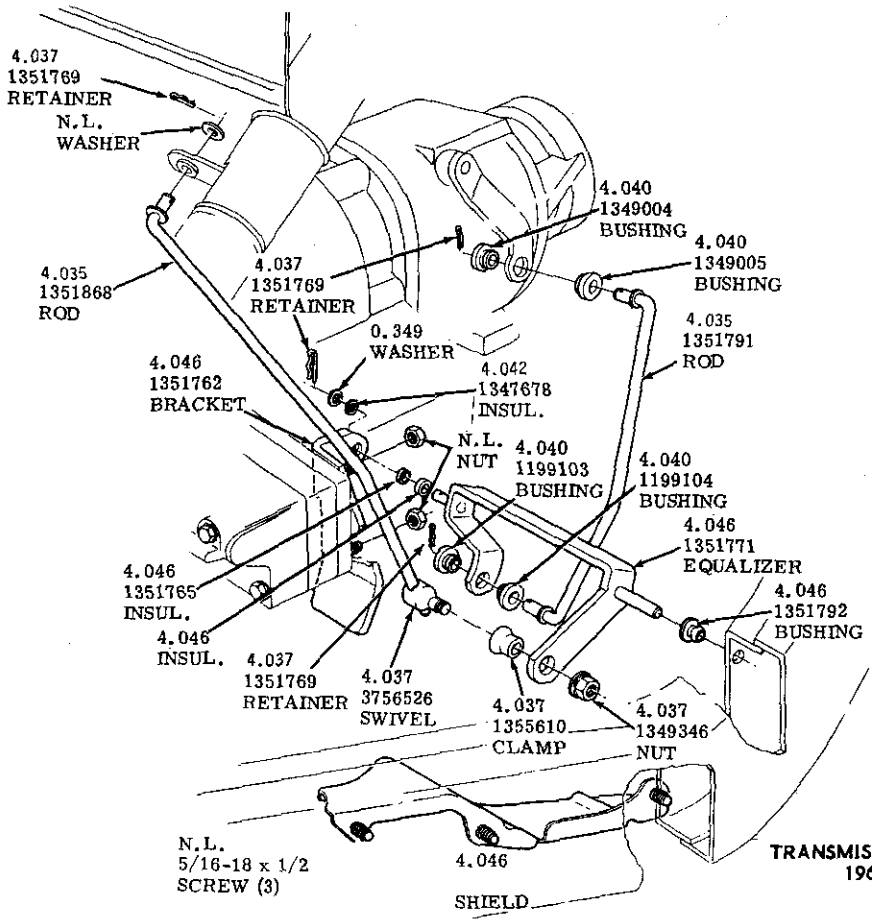

TRANSMISSION LOWER CONTROLS
1962-4400-4600-4800

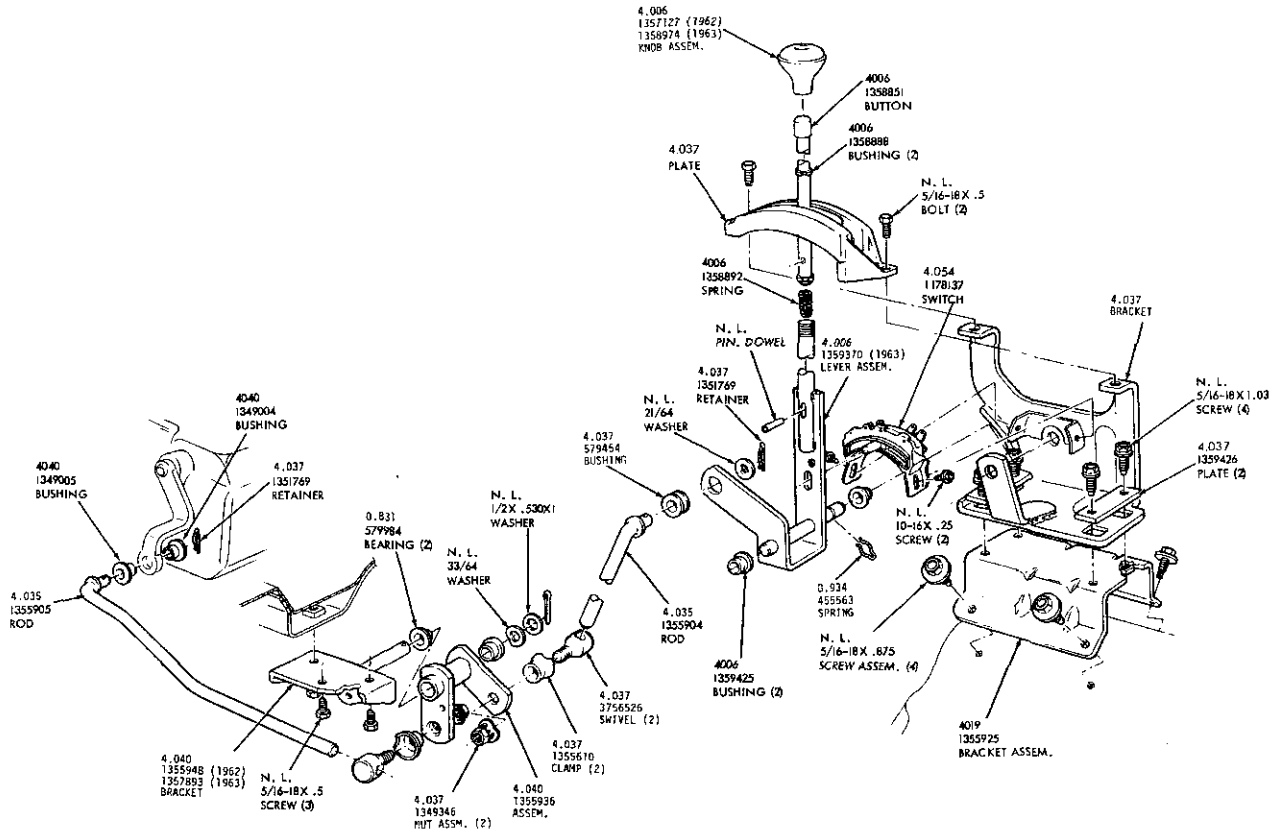

TRANSMISSION CONTROLS
1962-4647 & 1963-4639-4647-4667

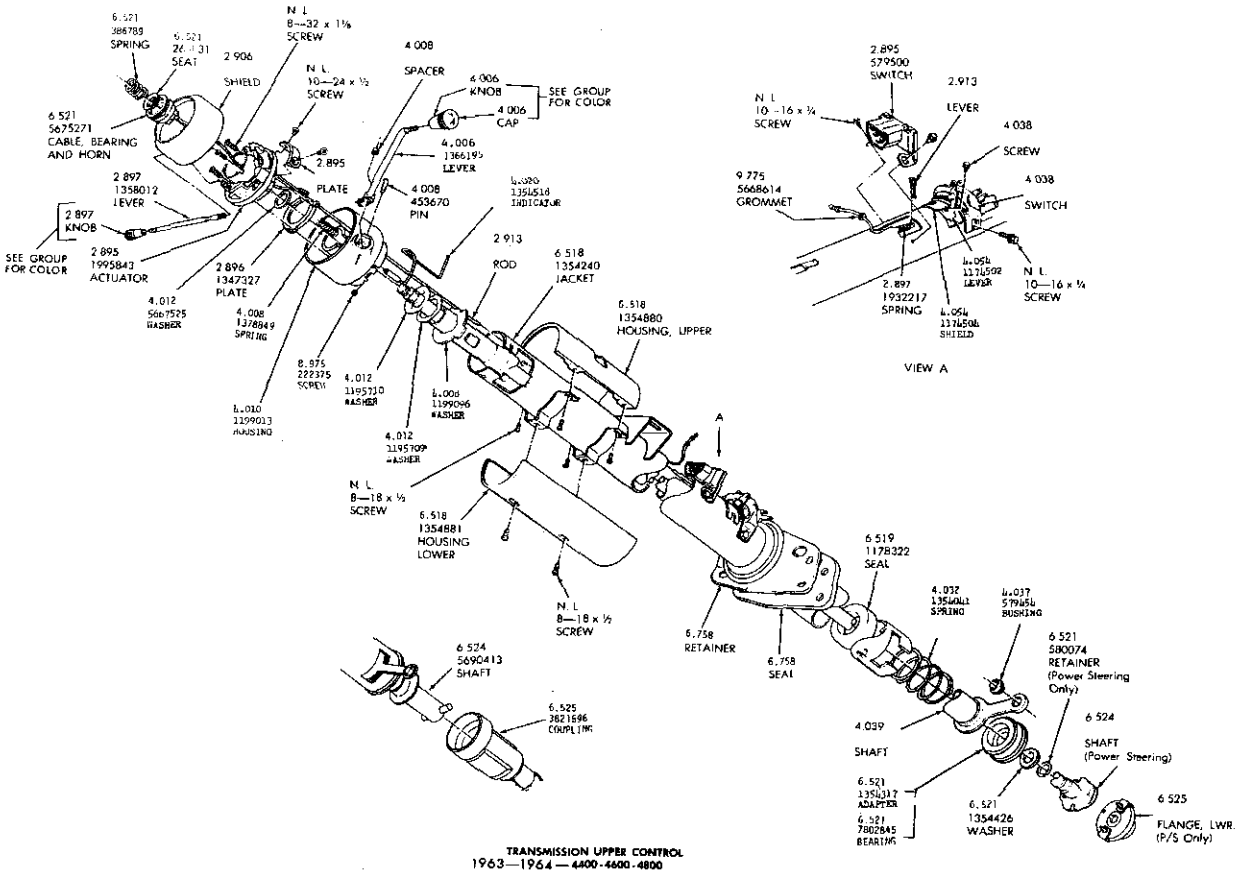

TRANSMISSION UPPER CONTROL
1963—1964 — 4400-4600-4800

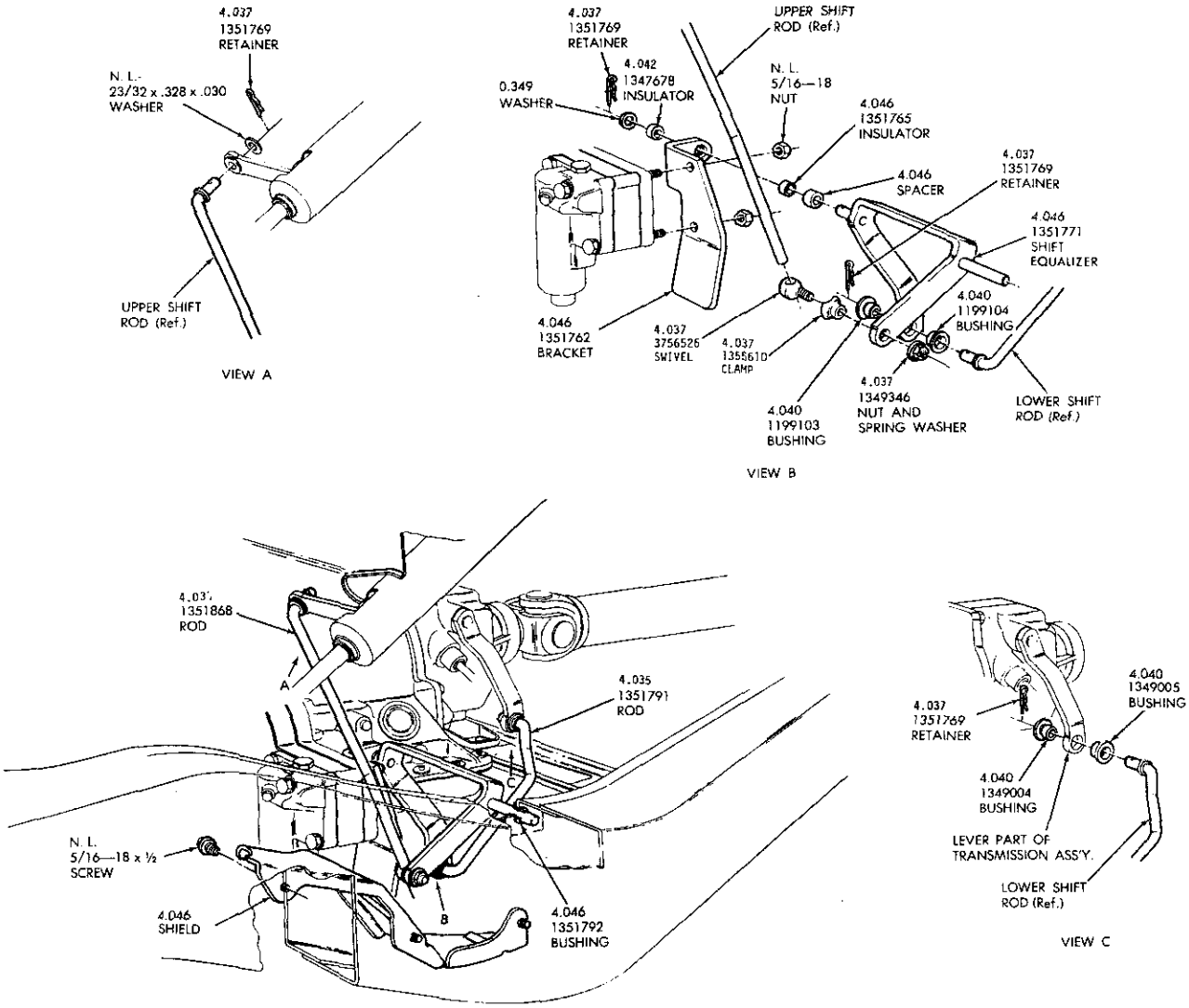

TRANSMISSION LOWER CONTROL
1963 — 4400-4600-4800

MEMORANDA

TRIPLE

TURBINE

AUTOMATIC

TRANSMISSION

MEMORANDA

VALVE BODY, CONTROLS AND OIL PAN
1958-59 3T TRANSMISSION

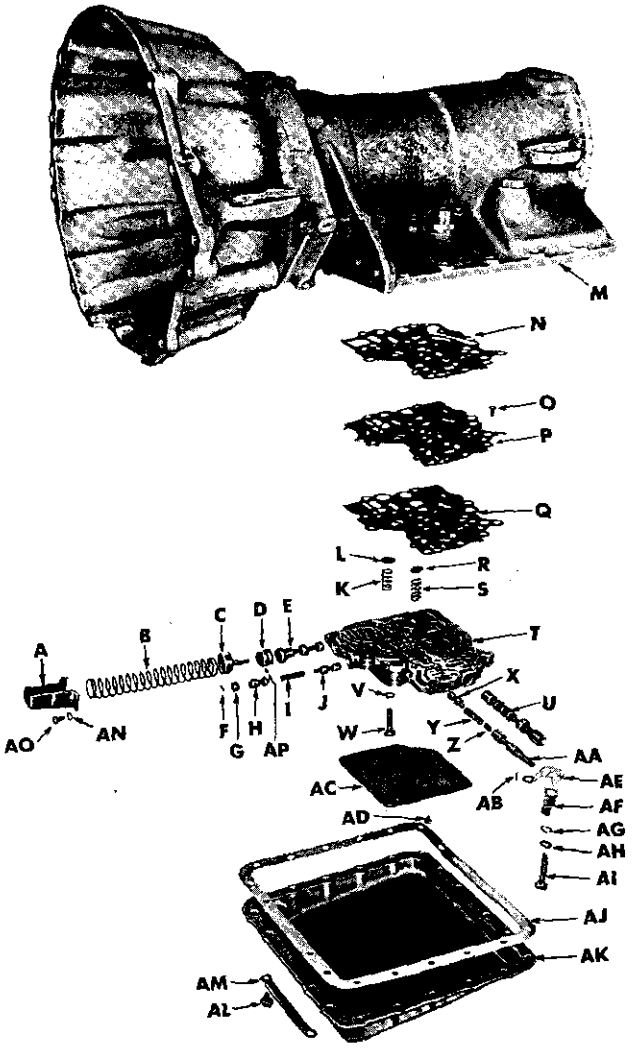

A	RETAINER, Pressure Regulator Valve Spring	4.273
B	SPRING, Pressure Regulator Valve	4.273
C	SPRING SEAT, Pressure Regulator Valve	4.273
D	GUIDE, Pressure Regulator Valve Spring Pin	4.273
E	VALVE, Pressure Regulator	4.273
F	PIN, Dowel—1/8 x 13/16—Reverse Boost Valve Retaining	N.L.
G	RETAINER, Reverse Boost Valve	4.278
H	VALVE, Reverse Boost	4.278
I	SPRING, Reverse Boost	4.278
J	VALVE, Modulator	4.278
K	SPRING, Check Valve	4.269
L	VALVE, Pump Check	4.269
M	CASE, Transmission	N.L.
N	GASKET, Valve Body Plate—Upper	4.265
O	SCREW, Flat Head Cross Recess Machine—12-24 x 1/2—Lower Gasket and Plate to Valve Body	8.908
P	PLATE, Valve Body	4.265
Q	GASKET, Valve Body Plate—Lower	4.265
R	VALVE, Pump Check	4.269
S	SPRING, Check Valve	4.269
T	BODY, Valve	4.265
U	VALVE, Shift Control	4.218
V	WASHER, Lock—5/16—Valve Body to Transmission Case	8.931
W	BOLT, Hex. Head—5/16-18 x 1 1/4-1 1/2—Valve Body to Transmission Case	8.900
X	VALVE, Modulator	4.278
Y	SPRING, Modulator Valve	4.278
Z	SPRING, Stator Pressure Booster	4.278
AA	VALVE, Stator Control (includes AE and AI)	4.277
AB	PIN, Spring—Valve Stator Control	4.277
AC	SCREEN, Oil	4.197
AD	SCREW, Fillister Head Cross Recess Machine—12-24 x 3/8—Oil Screen to Valve Body	8.908
AE	STOP, Stator Control Valve	N.L.
AF	STOP, Stator Control Valve Lever	4.122
AG	WASHER, Lock—5/16—Valve Body to Transmission Case at Stator Control Valve Lever Stop	N.L.
AH	WASHER, Plain—21/64 x 5/8 x .090—Valve Body to Transmission Case at Stator Control Valve Lever Stop	[illegible]
AI	BOLT, Hex. Head—5/16-18 x 1 3/4—Valve Body to Transmission Case at Stator Control Valve Lever Stop	8.900
AJ	GASKET, Transmission Case Oil Pan	4.196
AK	PAN, Transmission Case Oil	4.195
AL	SCREW, Hex. Head Machine with Spring Lock Washer—5/16-18 x 5/8—Oil Pan to Transmission Case	8.900
AM	REINFORCEMENT, Transmission Case Oil Pan Flange	4.195
AN	WASHER, Lock—1/4—Pressure Regulator Valve Spring Retainer to Valve Body	N.L.
AO	BOLT, Hex. Head—1/4-20 x 7/16—Pressure Regulator Valve Spring Retainer to Valve Body	8.900
AP	PIN, Chamfered Straight—1/8 x 3/16—Pressure Regulator Valve Guide to Valve Body	8.939

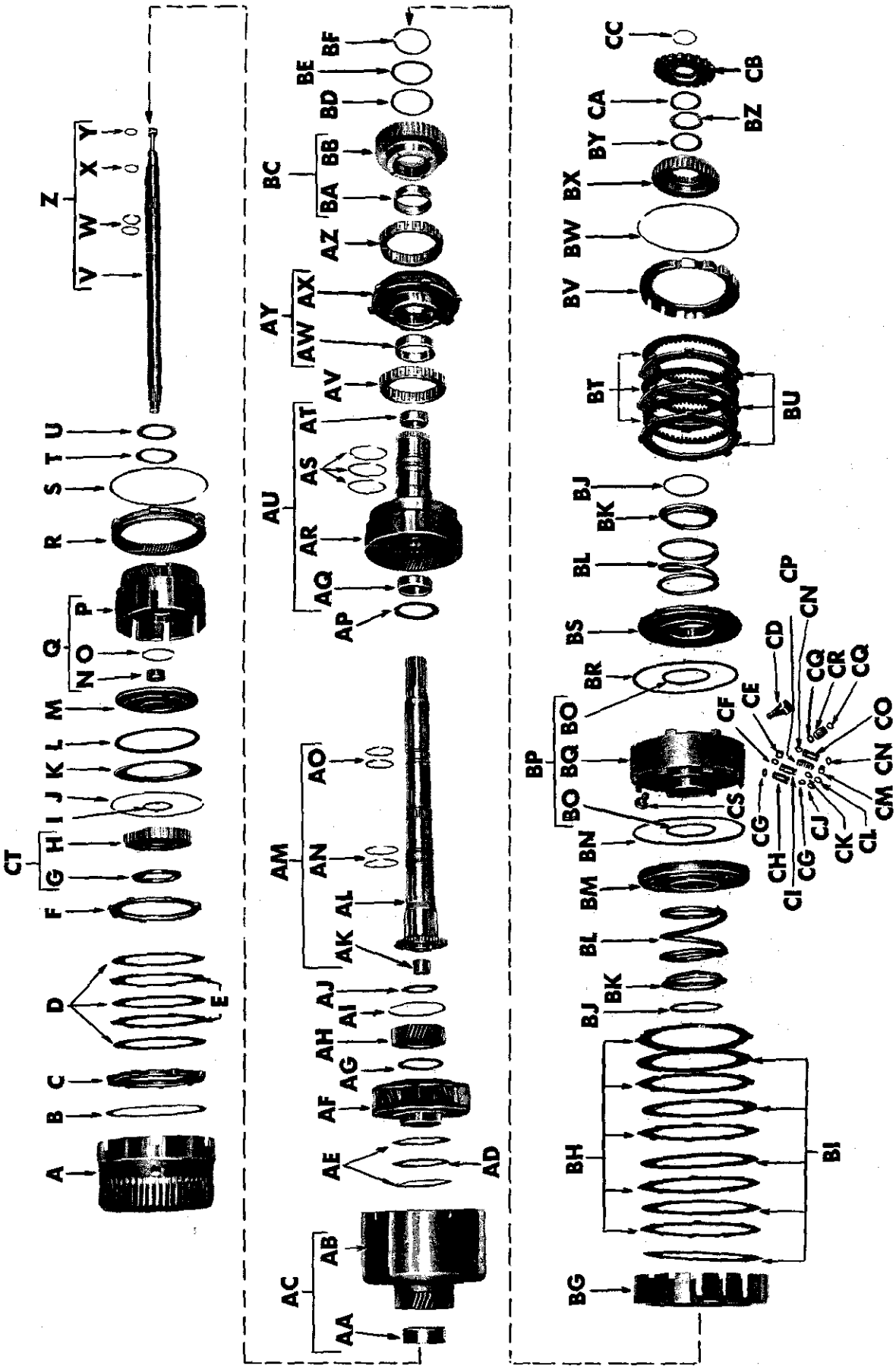
A
B
C
D
E
F
CT
G
H
I
J
K
L
M
N
O
Q
P
R
S
T
U
V
W
X
Y
Z
AA
AB
AC
AD
AE
AF
AG
AH
AI
AJ
AK
AL
AM
AN
AO
AP
AQ
AR
AS
AT
AU
AV
AW
AX
AY
AZ
BA
BB
BC
BD
BE
BF
BG
BH
BI
BJ
BK
BL
BM
BN
BO
BP
BQ
BR
BS
BT
BU
BV
BW
BX
BY
CA
BZ
CB
CC
CD
CE
CF
CG
CH
CI
CJ
CK
CL
CM
CN
CO
CP
CQ
CR
CS

GEAR SETS, CLUTCHES, PISTONS AND HILL BRAKE
1958-59 3T TRANSMISSION

A	CARRIER, Front Planet Ring Gear	4.179
B	RING, Neutral Clutch Retaining	4.170
C	PLSTE, Neutral Clutch Backing	4.170
D	PLATE, Neutral Clutch friction (kit)	4.170
E	PLATE, Neutral Clutch Separator (kit)	4.170
F	PLATE, Neutral Clutch Pressure	4.170
G	BEARING, Neutral Clutch Hub Needle Thrust	4.170
H	HUB, Neutral Clutch	N.L.
I	WASHER, Thrust— Between Front Planet Carrier and Neutral Clutch Hub	4.170
J	RING, Neutral Clutch Retaining	4.170
K	SPRING, Neutral Clutch	4.170
L	SEAL, Neutral Clutch Piston Oil— Outer	4.170
M	PISTON, Neutral Clutch	4.170
N	BUSHING, Front Planet Carrier	4.174
O	SEAL, Neutral Clutch Piston Oil—Inner	4.170
P	CARRIER, Front Planet	4.174
R	GEAR, Front Planet Ring	4.179
S	RING, Front Planet Ring Gear Retaining	4.179
T	RACE, Thrust Bearing—Between Front Sun Gear and Front Planet Carrier	4.174
U	NEEDLE BEARING— Between Front Planet Carrier and Front Sun Gear	4.174
V	SHAFT, Converter Input	N.L.
W	RING, Input Shaft—Converter First Turbine at Planet Carrier Oil Seal	4.123
X	RING, Input Shaft—Converter First Turbine at Output Shaft Oil Seal	4.123
Y	RING, Oil Transfer Pipe Sealing	4.123
Z	SHAFT, Input Converter First Turbine and Oil Seal Ring	4.123
AA	BUSHING, Front Sun Gear	4.179
AB	HUB, Sun Gear	N.L.
AC	HUB AND BUSHING, Front Sun Gear	4.179
AD	NEEDLE BEARING—Between Front Sun Gear and Rear Planet Carrier	4.174
AE	RACE, Thrust Bearing—Between Front Sun Gear and Rear Planet Carrier	4.174
AF	CARRIER, Rear Planet	4.174
AG	WASHER, Thrust—Rear Sun Gear—Between Rear Sun Gear and Rear Planet Carrier	4.179
AH	GEAR, Rear Sun	4.179
AI	RING, Rear Carrier Thrust	4.179
AJ	NEEDLE BEARING—Between Rear Sun Gear and Output Shaft	4.179
AK	BUSHING, Transmission Output Shaft	4.175
AL	SHAFT, Output	N.L.
AM	SHAFT AND RING, Transmission Output	4.175
AN	RING, Output Shaft and Support Oil Seal	4.175
AO	RING, Output Shaft at Rear Pump Oil Seal	4.175
AP	NEEDLE BEARING— Between Hill Brake Reaction Flange and Output Shaft	4.127
AQ	BUSHING, Hill Brake Reaction Shaft—Front	4.180
AR	GEAR, Rear Planet Ring and Reaction Shaft	N.L.
AS	RING, Hill Brake Reaction Shaft Sealing	4.180
AT	BUSHING, Hill Brake Reaction Shaft—Rear	4.180
AU	GEAR, Rear Planet Ring and Reaction Shaft	4.180
AV	SPRAG, Front Free Wheel Race	4.181
AW	BUSHING, Front Free Wheel Race	4.181
AX	RACE, Free Wheel— Front Inner and Rear Outer	N.L.
AY	RACE AND BUSHING, Free Wheel	4.181
AZ	SPRAG, Rear Free Wheel Race	4.181
BA	BUSHING, Rear Free Wheel Race	4.181
BB	RACE, Free Wheel— Rear Inner	N.L.
BC	RACE AND BUSHING, Free Wheel— Rear Inner	4.181
BD	WASHER, Thrust—Between Rear Free Wheel Race and Retaining Ring	4.181
BE	REINFORCEMENT, Thrust Washer— Between Rear Free Wheel Race and Retaining Ring	4.181
BF	RING, Retaining—Rear Free Wheel Race to Hill Brake Reaction Shaft	4.181
BG	PLATE, Forward Clutch Backing	4.183
BH	PLATE, Forward Clutch Separator (kit)	4.183
BI	PLATE, Forward Clutch Friction (kit)	4.183
BJ	RING, Piston Return Spring Seat	4.183
BK	SEAT, Piston Return Spring	4.183
BL	SPRING, Piston Return	4.183
BM	PISTON, Forward	4.183
BN	SEAL, Piston Outer	4.183
BO	RING, Oil Seal	4.183
BP	SUPPORT AND RING, Transmission Output Shaft	4.175
BQ	SUPPORT, Transmission Output Shaft	N.L.
BR	SEAL, Piston Outer	4.183
BS	PISTON, Hill Brake	4.180
BT	PLATE, Hill Brake Clutch Friction (kit)	4.180
BU	PLATE, Hill Brake Clutch Separator (kit)	4.180
BV	PLATE, Hill Brake Clutch Backing	4.180
BW	RING, Hill Brake Clutch Backing Plate Retaining	4.180
BX	HUB, Hill Brake Clutch	4.180
BY	RACE, Thrust Bearing— Hill Brake Clutch Hub —Front	4.180
BZ	NEEDLE BEARING— Between Front and Rear Brake Clutch Hub Thrust Bearing Race	4.180
CA	RACE, Thrust Bearing— Hill Brake Clutch Hub —Rear	4.180
CB	WHEEL, Parking Lock Ratchet	4.604
CC	RETAINER, Parking Lock Ratchet Wheel	4.604
CD	ANCHOR, Transmission Output Shaft Support	4.175
CE	BALL —5/16	N.L.
CF	RING, Oil Seal	4.122
CG	RING, Oil Seal	4.122
CH	SLEEVE, Adapter	4.106
CI	SLEEVE, Adapter	4.106
CJ	RING, Adapter Sleeve Seal Retaining	4.106
CK	RING, Oil Seal	4.122
CL	RING, Adapter Sleeve Seal Retaining	4.106
CM	CUP, Ball Check	4.175
CN	RING, Oil Seal	4.122
CO	SLEEVE, Adapter	4.106
CP	SPRING, Ball Check	4.175
CQ	RING, Oil Seal	4.122
CR	SLEEVE, Adapter	4.106
CS	ANCHOR, Transmission Output Shaft Support	4.175
CT	HUB AND BEARING, Neutral Clutch	4.170

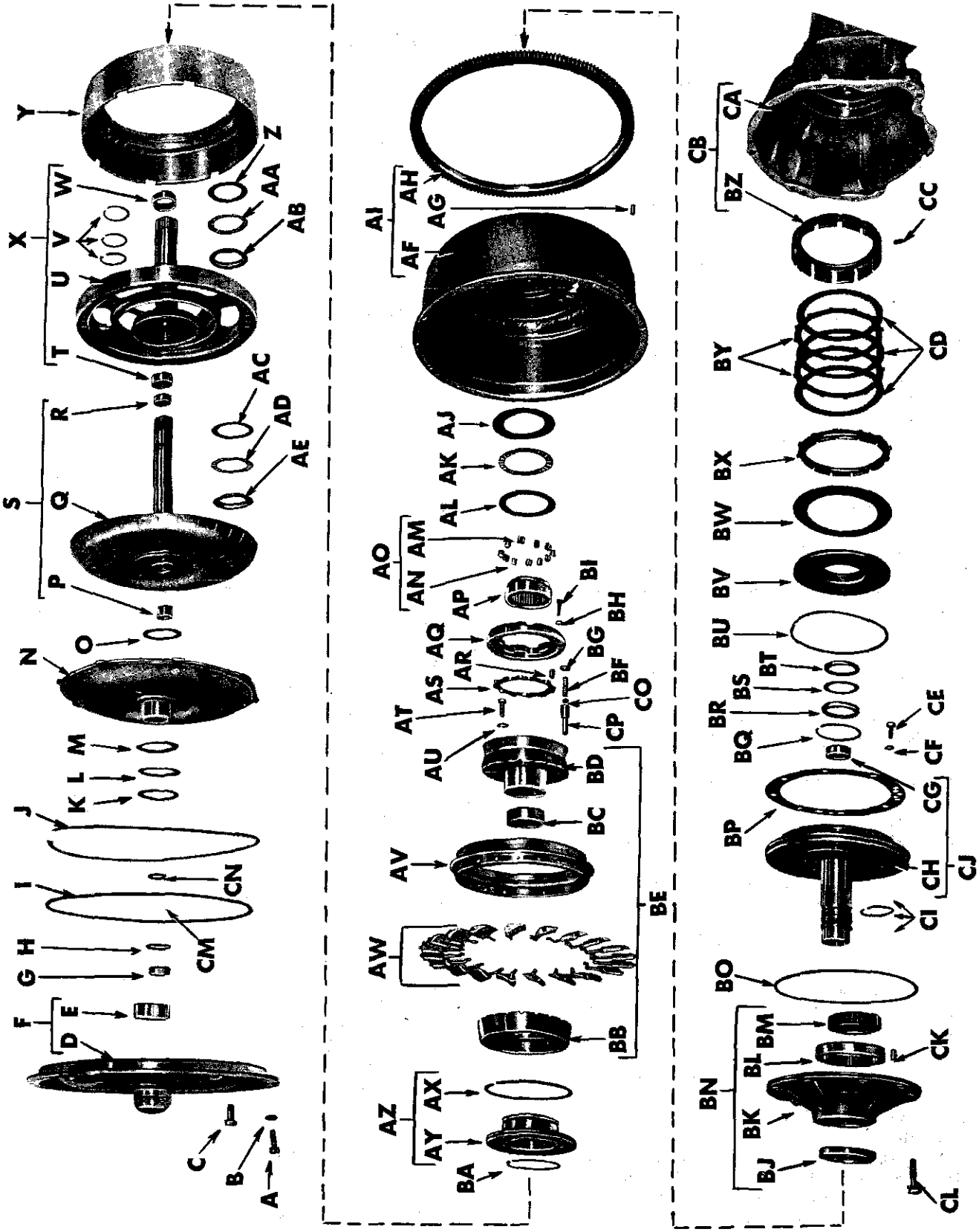
Y
Z
AA
AB
X
W
V
U
T
AC
AD
AE
R
S
Q
P
O
N
M
L
K
J
I
CN
CM
H
G
F
E
D
C
B
A
AI
AH
AG
AF
AJ
AK
AL
AO
AM
AN
AP
BI
BH
AQ
BG
AR
AS
BF
AT
CO
CP
AU
BD
BC
AV
BE
AW
BB
AZ
AX
AY
BA
CB
CA
BZ
CC
BY
CD
BX
BW
BV
BU
BT
BS
BR
CE
BQ
CF
CG
BP
CH
CJ
CI
BO
BM
BL
CK
BN
BK
BJ
CL

CONVERTER—1958-59 3T TRANSMISSION

A	BOLT, Hex Head—5/16-24 x 1—Converter Pump to Converter Pump and Ring Gear	8.900
B	WASHER, Lock—5/16—Converter Pump Caver to Converter Pump and Ring Gear	8.931
C	PLUG, Drain—Converter Pump Cover	4.115
D	COVER, Converter Pump	N.L.
E	BUSHING, Converter Pump Hub Cover	4.115
F	COVER, Converter Pump—Includes Bushings	4.115
G	NUT, Hex	4.123
H	WASHER, Special	4.123
I	SEAL, Converter Primary Pump	4.115
J	RING, Converter First Turbine Disc Retaining	4.127
K	RACE, Thrust Bearing	4.127
L	NEEDLE BEARING	4.127
M	RACE, Thrust Bearing	4.127
N	DISC AND HUB, Converter First Turbine	4.126
O	WASHER, Thrust—Between First Turbine Hub and Third Turbine Flange	4.127
P	BUSHING, Converter Third Turbine—Front	4.126
Q	TURBINE SHAFT AND FLANGE, Converter Third—Less Bushings	N.L.
R	BUSHING, Converter Third Turbine—Rear	4.126
S	TURBINE SHAFT AND FLANGE, Converter Third—Includes Bushings	4.126
T	BUSHING, Second Turbine Carrier—Front	4.126
U	TURBINE AND SHAFT, Converter Second—Less Bushings and Rings	N.L.
V	RING, Input Shaft Second Turbine Oil Seal	4.126
W	BUSHING, Second Turbine Carrier—Rear	4.126
X	TURBINE AND SHAFT, Converter Second—Includes Bushings and Rings	4.126
Y	TURBINE, Converter First	4.126
Z	RACE, Thrust Bearing	4.127
AA	NEEDLE BEARING	4.127
AB	RACE, Thrust Bearing Flange	4.127
AC	RACE, Thrust Bearing	4.127
AD	NEEDLE BEARING	4.127
AE	RACE, Thrust Bearing Flange	4.127
AF	HUB, Converter Pump	N.L.
AG	PIN, Spring—1/4 x 3/8—Ring Gear to Transmission Converter Pump Housing	0.673
AH	GEAR, Ring	0.673
AI	HOUSING AND RING GEAR, Converter Pump	4.115
AJ	RACE, Thrust Bearing	4.115
AK	NEEDLE BEARING	4.115
AL	WASHER, Thrust—Between Needle Bearing and Stator Free Wheel Cam	4.115
AM	SPRING, Converter Stator Free Wheel	4.117
AN	ROLLER, Converter Stator Free Wheel Cam	4.117
AO	KIT, Converter Stator Free Wheel Springs and Rollers	4.117
AP	RACE, Stator Free Wheel	4.117
AQ	CAM, Stator Free Wheel	4.117
AR	PIN, Dowel	N.L.
AS	WASHER, Pilot—Between Free Wheel Cam and Race	4.117
AT	SCREW, Stator Blade Carrier—Front to Rear Carrier	4.117
AU	WASHER, Internal Tooth Lock—1/4—Stator Blade Front Carrier to Rear Carrier	N.L.
AV	RING, Stator Blade Carrier	4.117
AW	BLADE, Stator	4.117
AX	RING, Piston Seal—Outer	4.117
AY	PISTON, Stator	N.L.
AZ	PISTON AND RING, Stator	4.117
BA	RING, Converter Stator Piston Retaining	4.117
BB	CARRIER, Stator Blade—Front	N.L.
BC	BUSHING, Stator Blade Carrier Sleeve	4.117
BD	CARRIER, Stator Blade—Rear	N.L.
BE	CARRIER, Stator Blade	4.117
BF	SPRING, Stator Piston Control	4.117
BG	RETAINER, Stator Piston Control Valve	4.117
BH	WASHER, Lock—#12—Free Wheel Cam to Stator Blade Carrier	N.L.
BI	SCREW, Free Wheel Cam To Stator Blade Carrier	4.117
BJ	SEAL, Front Pump Body	4.224
BK	BODY, Front Pump	N.L.
BL	GEAR, Front Pump Driven	N.L.
BM	GEAR, Front Pump Driving	N.L.
BN	PUMP, Front Oil	4.224
BO	RING, Front Pump to Case Oil Seal	4.224
BP	GASKET, Converter Reaction Flange	4.226
BQ	RING, Reverse Piston Oil Seal Inner	4.189
BR	RACE, Thrust Bearing—Between Needle Bearing and Reaction Flange	4.226
BS	NEEDLE BEARING	4.127
BT	RACE, Thrust Bearing—Between Needle Bearing and Front Planet Ring Gear	4.226
BU	SEAL, Reverse Piston Outer	4.189
BV	PISTON, Reverse	4.189
BW	SPRING, Reverse Clutch	4.189
BX	PLATE, Reverse Clutch Pressure	4.189
BY	PLATE, Reverse Clutch Separator (Kit)	4.189
BZ	PLATE, Reverse Clutch Backing	N.L.
CA	CASE, Transmission,	N.L.
CB	CASE, Transmission—Includes Reverse Clutch Backing Plate	N.L.
CC	PIN, Reverse Clutch Backing Plate to Transmission Case	N.L.
CD	PLATE, Reverse Clutch Friction (kit)	4.189
CE	BOLT, Hex. Head—5/16-18 x 7/8—Reaction Flange to Front Pump Body	8.900
CF	WASHER, Lock—5/16—Reaction Flange to Front Pump Body	8.931
CG	BUSHING, Converter Reaction Shaft	4.226
CH	SHAFT AND FLANGE, Converter Reaction	N.L.
CI	RING, Converter Reaction Shaft Oil Seal	4.226
CJ	SHAFT, Flange, Bushing and Ring—Converter reaction	4.226
CK	PIN, Dowel—5/16 x 5/8—Pump Cover to Pump Body (included with BN)	N.L.
CL	BOLT, Front Pump Cover and Reaction Flange to Transmission Case	4.224
CM	SPRING, Converter First Turbine Hub Valve	4.126
CN	VALVE, Converter First Turbine Hub	4.126
CO	SPACER, Stator Piston Control Spring	4.117
CP	VALVE, Stator Piston Control	4.117

PARKING LOCK
1958-59 3T TRANSMISSION

A	CASE, Transmission	N.L.
B	PLUG, Hexagon Head Pipe—1/8"	4.115
C	GASKET, High Accumulator Control Valve Crank Bearing	4.122
D	BEARING, Stator Control Valve Shaft	4.122
E	SEAL, Stator Control Valve Shaft	4.122
F	SHAFT, Stator Control Valve—Upper	4.122
G	NUT, Hex.—7/16-20—Lever to Valve Operating Cross Shaft	N.L.
H	WASHER, Lock—7/16—Lever to Valve Operating Cross Shaft	N.L.
I	SEAL, Cross Shaft Oil—Parking Lock Release Cross Shaft Oil Seal	4.270
J	LEVER, Transmission Shift	4.040
K	BEARING, Parking Lock Release Cross Shaft	4.270
L	LEVER, Stator Control Valve—Lower	4.122
M	WASHER, Lock—5/16—Stator Control Valve Lever to Shaft	8.931
N	NUT, Hex.—5/16-24—Stator Control Valve Lever to Shaft	8.915
O	SHAFT, Parking Lock Pawl	4.294
P	PAWL, Parking Lock	4.294
Q	SPRING, Parking Lock Pawl Return	4.295
R	PLUG, Button	4.103
S	PIN, Special—Parking Lock Pawl Shaft Retaining	4.294
T	SPRING, Parking Lock Apply	4.597
U	LEVER, Parking Lock Apply	4.290
V	PIN, Spring—3/16 x 5/8—Parking Lock Release Shaft	4.597
W	SCREW, Parking Lock Apply Lever Adjusting	4.595
X	SHAFT AND LEVER—Parking Lock Release	4.290
Y	WASHER, Lock—Parking Lock Apply Lever Adjusting Screw to Release Lever	N.L.
Z	NUT, Hex. Jam—1/4-28—Parking Lock Apply Lever Adjusting Screw to Release Lever	N.L.
AA	COVER, Parking Lock Slide and Roller Body	4.290
AB	SLIDE AND ROLLER, Pawl Actuating	4.290
AC	TRACK, Pawl Actuating Slide	4.290
AD	BODY, Parking Lock Slide and Roller	4.290
AE	BOLT, Hex—1/4-28 x 1/2—Detent Plate to Operating Lever	N.L.
AF	WASHER, Plain—9/32 x 5/8 x .060—Detent Plate to Operating Lever	N.L.
AG	WASHER, Lock—1/4—Detent Plate to Operating Lever	N.L.
AH	PLATE, Detent	4.275
AI	LEVER, Valve Operating	4.275
AJ	WASHER, Lock—5/16—Detent Plate and Valve Operating Lever to Parking Lock Release Shaft	8.931
AK	NUT, Hex.—5/16-24—Detent Plate and Valve Operating Lever to Parking Lock Release Shaft	8.915
AL	LEVER, Detent Roller	4.275
AM	SPRING, Detent Roller Lever	4.039
AN	SPRING, Retainer—1/8—Detent Lever Mounting Pin Retainer Spring	8.934
AO	PIN, Detent Lever Mounting	4.275
AP	SPRING, Retainer—1/8—Detent Lever Mounting Pin Retainer Spring	8.934

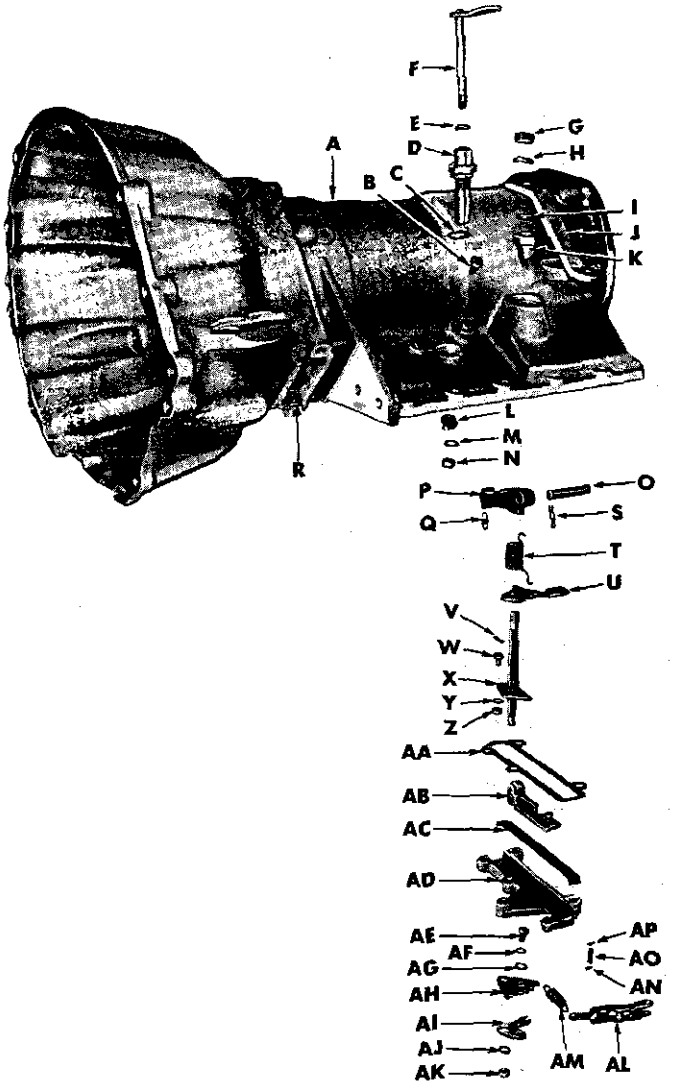

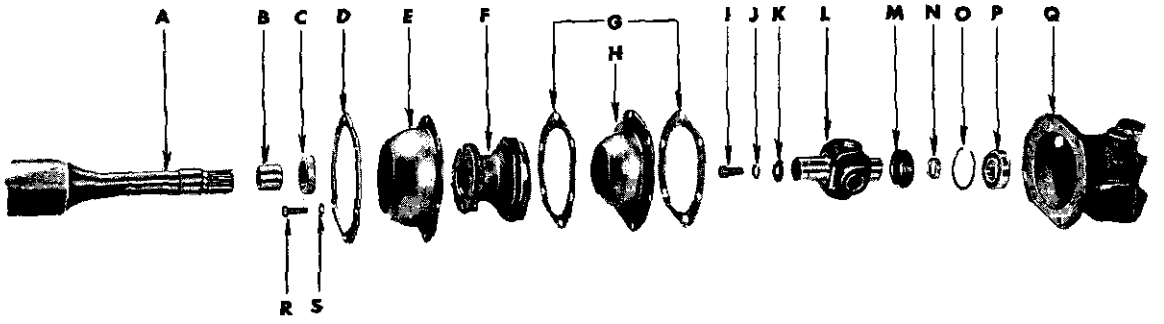

TORQUE BALL, U-JOINT AND REAR BEARING RETAINER—1956 DYNAFLOW

A	SHAFT, Propeller	5.441
B	SLEEVE, Propeller Shaft Seal	5.442
C	SEAL, Propeller Shaft	5.442
D	REINFORCEMENT, Torque Ball Retainer	5.560
E	RETAINER, Torque Ball—Outer	5.560
F	BALL, Universal Joint Torque	5.564
G	GASKET, Torque Ball Retainer	5.560
H	RETAINER, Torque Ball—Inner	5.560
I	BOLT, Universal Joint Yoke	5.546
J	WASHER, Lock—1/2—Transmission Main Shaft to Universal Joint	N.L.
K	WASHER, Transmission Main Shaft to Universal Joint	4.404
L	JOINT, Universal	5.548
M	GEAR, Speedometer Driving Worm	4.343
N	SPACER, Speedometer Gear	4.345
O	LOCK, Transmission Rear Bearing	4.412
P	BEARING, Transmission Rear	4.408
Q	RETAINER, Transmission Rear Bearing	N.L.
R	BOLT, Hex. Hd.—3/8-16 x 1 Torque Ball Inner & Outer Retainer to Transmission Rear Bearing Retainer	8.900
S	WASHER, Lock—3/8—Same Usage as R.	8.931

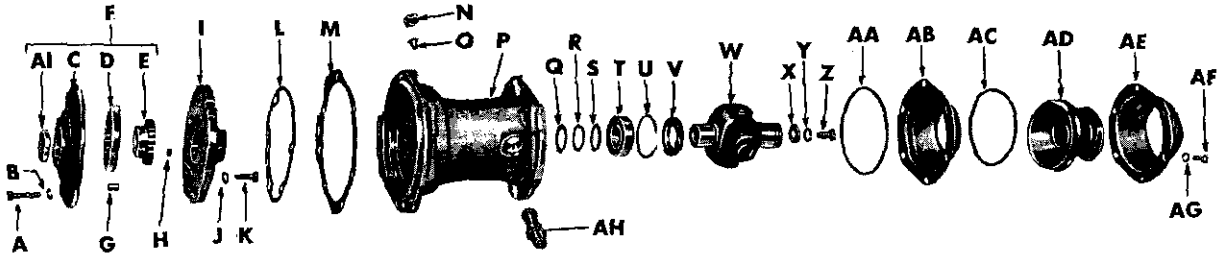

TYPICAL REAR BEARING RETAINER—1958-59 3T TRANSMISSION

A	BOLT, Hex. Head—5/16-18 x 1 3/8— Rear Pump to Rear Bearing Retainer	8.900
B	WASHER, Lock—5/16—Rear Pump to Rear Bearing Retainer	8.931
C	BODY, Rear Pump	N.L.
D	GEAR, Rear Pump Driven	N.L.
E	GEAR, Rear Pump Driving	N.L.
F	PUMP, Rear	4.200
G	PIN, 5/16 x 1/2—Rear Pump Cover to Rear Pump Body	N.L.
H	KEY, Rear Pump Drive	4.191
I	COVER, Rear Pump	4.201
J	WASHER, Lock—5/16—Rear Pump Cover to Rear Pump Body	8.931
K	BOLT, Hex. Head—5/16-18 x 1—Rear Pump Cover to Rear Pump Body	N.L.
L	GASKET, Rear Pump	4.201
M	GASKET, Rear Bearing Retainer	4.318
N	CAP, Breather	4.687
O	SCREW, Transmission Breather	4.104
P	RETAINER, Transmission Rear Bearing	N.L.
Q	SPACER, Transmission Output Shaft	4.175
R	WASHER, .023-.020—Between Output Shaft Spacer and Rear Bearing	4.175
S	WASHER, .013-.010—Between Output Shaft Spacer and Rear Bearing	4.175
T	BEARING, Transmission Rear	4.408
U	LOCK, Transmission Rear Bearing	4.412
V	GEAR, Speedometer Driving Worm	4.343
W	JOINT, Universal—Front	5.548
X	WASHER, Plain—U-Joint to Planet Carrier	4.404
Y	WASHER, Lock—1/2—U-Joint to Planet Carrier	N.L.
Z	BOLT, U-Joint to Planet Carrier	5.546
AA	RING, Torque Ball Flange Sealing	5.560
AB	RETAINER, Torque Ball—Inner	5.560
AC	RING, Outer Torque Ball Retainer Sealing	5.560
AD	BALL, U-Joint Torque	5.564
AE	RETAINER, Torque Ball—Outer	5.560
AF	WASHER, Lock—3/8—Torque Ball Retainers to Rear Bearing Retainer	8.931
AG	BOLT, Hex. Head—3/8-16 x 7/8—Torque Ball Retainers to Rear Bearing Retainer	8.900
AH	GEAR AND SHAFT, Speedometer Driven	4.337
AI	BUSHING, Rear Pump Body	4.200

COMPLETE CABLE CUTTING DETAILS AND INSTRUCTIONS

CORRECT CABLE CUTTING PROCEDURE

Good speedometer cable is made of seventeen or more strands of somewhat springy wire. Depending on heat treat, cutting may or may not cause unravelling. The sofest procedure to follow is to first tin about a two-inch area of the cable at the point to be cut. Dip or brush acid flux on the two-inch area to clean the wires. Heat the cable at the point to be tinned and flow on a thin coat of solder. The cable can be dipped in molten solder to obtain the same effect.

Cut the cable with sharp side-cutter pliers, or any tool which will result in a clean cut without flattening the cable. It should be noted that distortion or flattening of cable at the cutting point is usually due to dull tools.

Cutting length of the cable for a given application is controlled by two factors: The length of the cable housing or casing, and the depth of cable insertion in drive tips (if they are used).

The application chart contains information on overall length for most Buicks. One method of checking whether a cable is too long or too short is to measure the amount of cable protruding from top and bottom of casing. Cables which measure 100 inches or less should protrude not more than 3/8" from the upper ferrule and 3/4" from the lower ferrule.

Model	Year	Cable Kit	Cutting Length	Assembled Length
80, 90	1939	6451067	70-1/2	71-1/8
40, 60	1939-40	6451067	66-1/2	67-1/8
50, 70	1940	6451067	66-1/2	67-1/8
80, 90	1940	6451067	70-1/2	71-1/8
40, 50	1941	6451067	69	69-5/8
60, 70, 90	1941	6451067	70-1/2	71-1/8
60, 90	1942	6451067	69	69-5/8
40	1942-49	6451067	66-1/2	67-1/8
70	1942-48	6451067	66-1/2	67-1/8
50	1942-49	6451067	64	64-5/8
70	1949	6451067	68	68-5/8
40, 50	1950	6451067	68	68-5/8
50	1951-52	6451067	68	68-5/8
70	1950-52	6451067	73	73-5/8
40	1951-52	6451067	65-1/2	66-1/8
40	1953	6451067	65-1/2	66-1/8
50, 70	1953	6451067	75-1/2	76-1/8
40, 60	1954	6451067	68	68-5/8
50 Synchromesh	1954-55	6451067	70-3/8	71
50, 70 D.F.	1954-55	6451067	72-7/8	73-1/2
40, 60 Synchromesh	1955	6451067	58	58-5/8
40, 60 D.F.	1955	6451067	63	63-5/8
40 Synchromesh	1956-58	6451067	65-1/2	66-1/8
40, 60 D.F.	1956	6451067	68	68-5/8
50, 70 D.F.	1956	6451067	70-1/2	71-1/8
40, 60, 50, 70 D.F.	1957-58	6451067	73	73-5/8
4400 Synchromesh	1959	6451067	73	73-5/8
*1st Jobs A.T.	1959	6451067	75-1/2	76-1/8
2nd Jobs A.T.	1959	6451067	78	78-5/8
All Models	1960	6451067	75-1/2	76-1/8

*1959 1st Jobs have metal formed elbow at speedometer head.

DUAL PATH AUTOMATIC TRANSMISSION SPECIAL SERIES

MEMORANDA

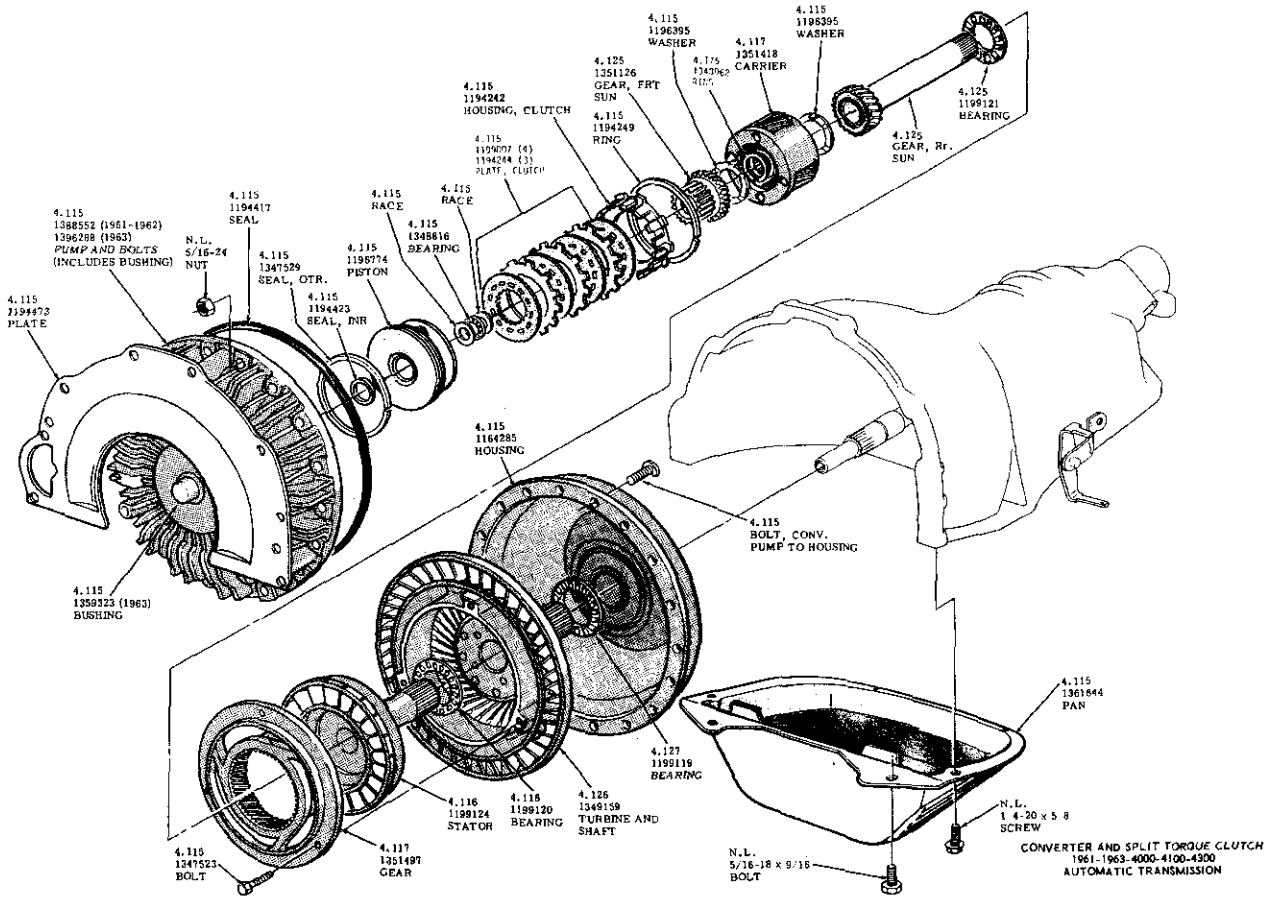

CONVERTER AND SPLIT TORQUE CLUTCH
1961-1963-4000-4100-4300
AUTOMATIC TRANSMISSION

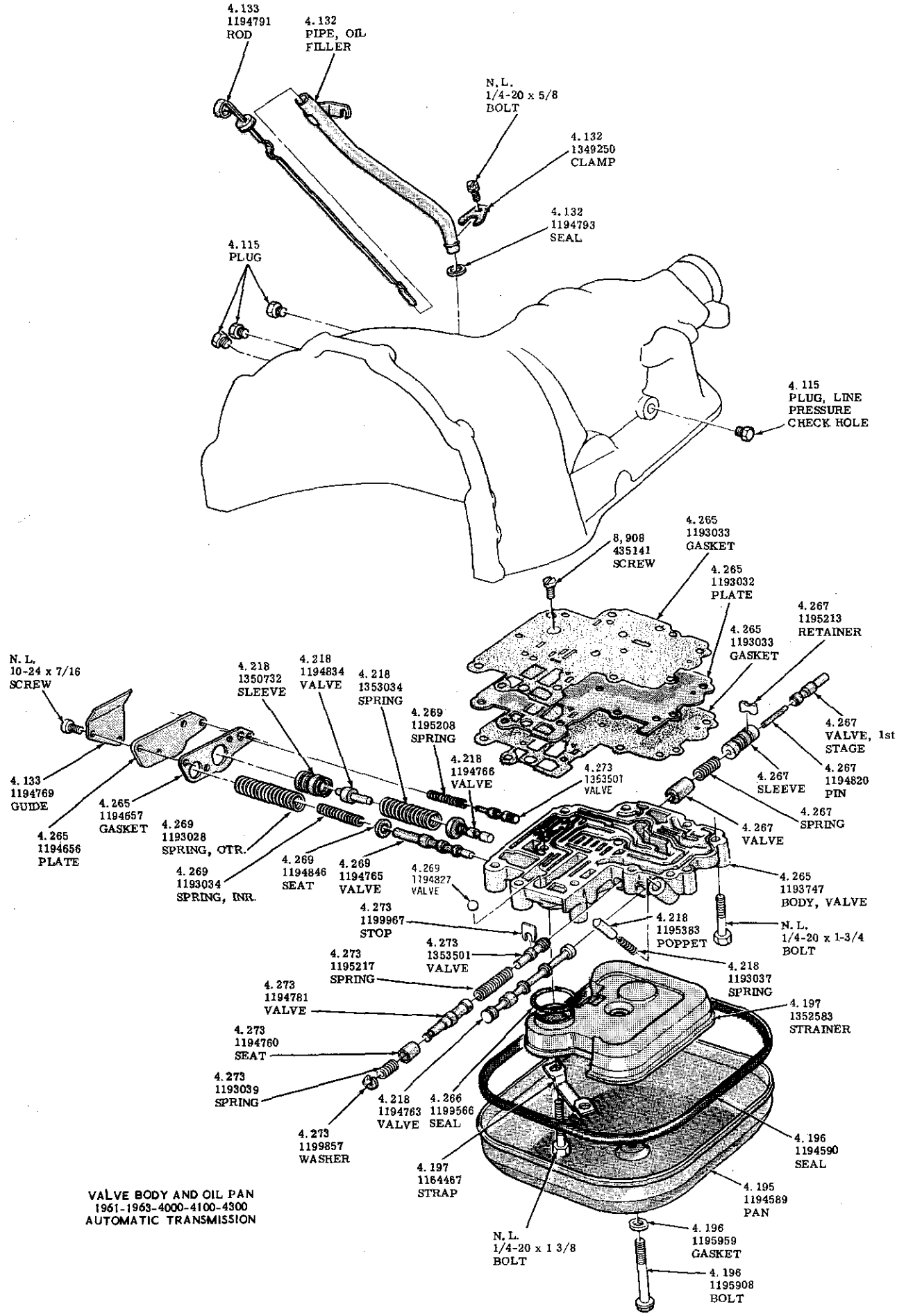

VALVE BODY AND OIL PAN
1961-1963-4000-4100-4300
AUTOMATIC TRANSMISSION

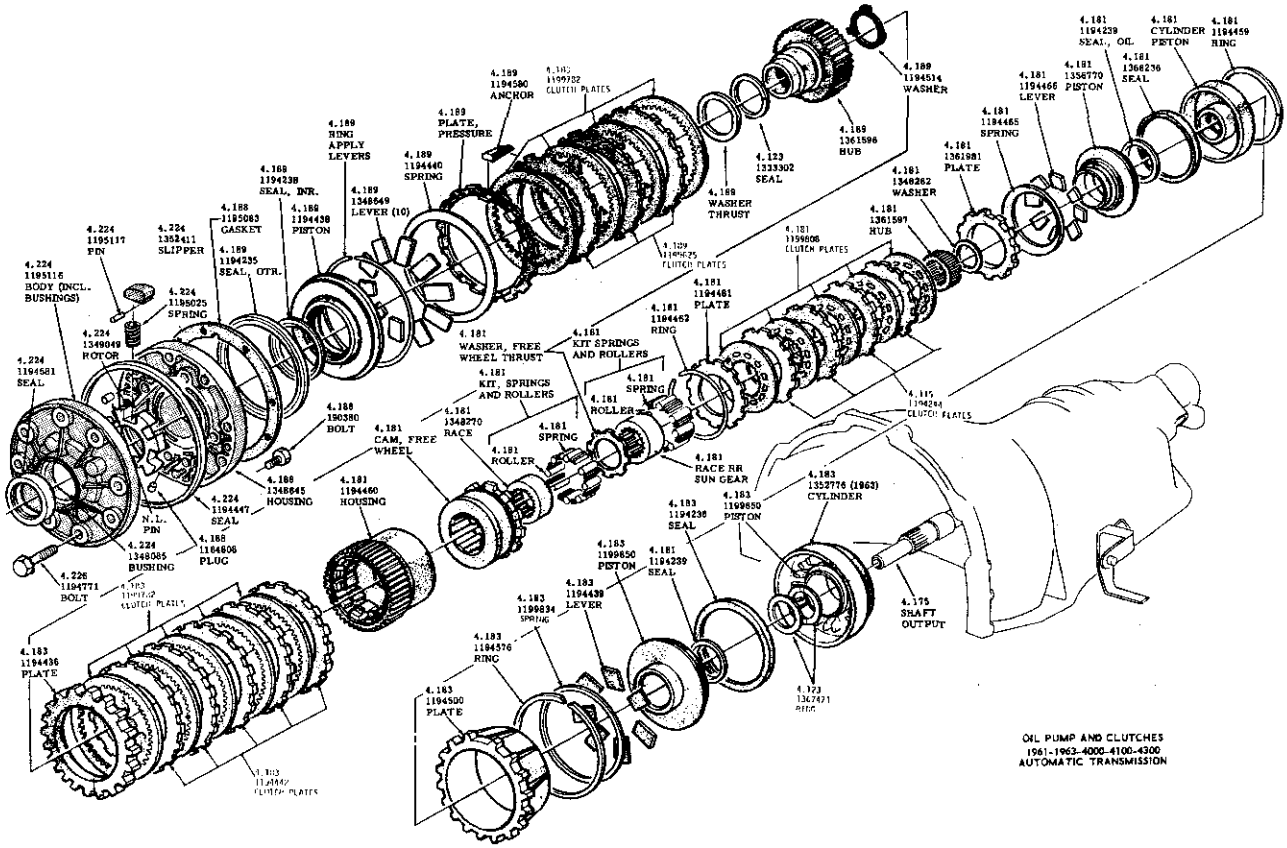

OIL PUMP AND CLUTCHES
1961-1963-4000-4100-4300
AUTOMATIC TRANSMISSION

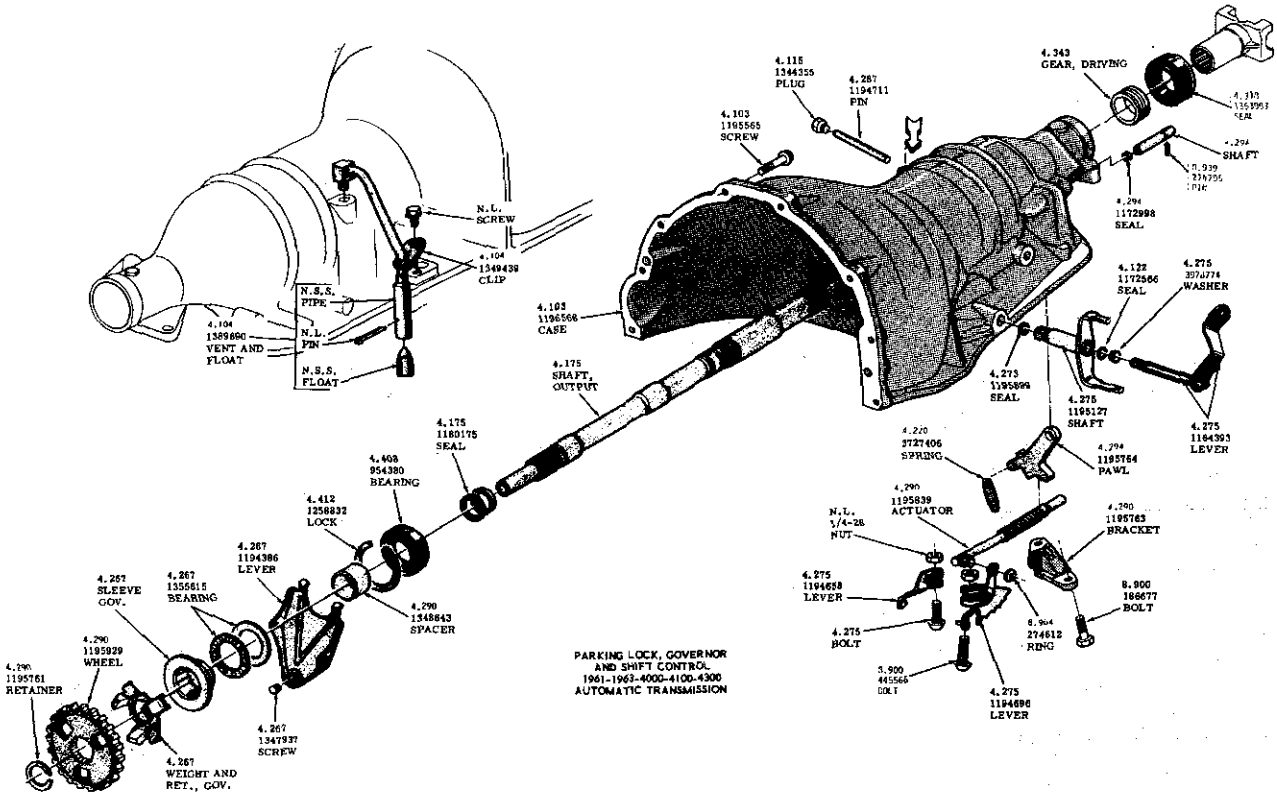
4.343
GEAR, DRIVING
4.115
1344355
PLUG
4.287
1194711
PIN
4.103
1195565
SCREW
SHAFT
4.294
1172998
SEAL
N.L.
SCREW
4.104
1349439
CLIP
N.S.S.
PIPE
4.104
1359690
VENT AND
FLOAT
N.L.
PIN
N.S.S.
FLOAT
4.103
1196568
CASE
4.122
1172566
SEAL
4.275
3970774
WASHER
4.175
SHAFT,
OUTPUT
4.275
1195899
SEAL
4.275
1195127
SHAFT
4.275
1164393
LEVER
4.175
1180175
SEAL
4.220
3727406
SPRING
4.294
1195764
PAWL
4.408
954380
BEARING
4.412
1258832
LOCK
4.290
1195839
ACTUATOR
N.L.
1/4-28
NUT
4.290
1195763
BRACKET
4.267
1194386
LEVER
4.267
SLEEVE
GOV.
4.267
1355615
BEARING
4.275
1194658
LEVER
8.900
186677
BOLT
4.290
1348643
SPACER
4.275
BOLT
8.964
274612
RING
4.290
1195929
WHEEL
4.290
1195761
RETAINER
PARKING LOCK, GOVERNOR
AND SHIFT CONTROL
1961-1963-4000-4100-4300
AUTOMATIC TRANSMISSION
3.900
445566
BOLT
4.275
1194696
LEVER
4.267
1347937
SCREW
4.267
WEIGHT AND
RET., GOV.

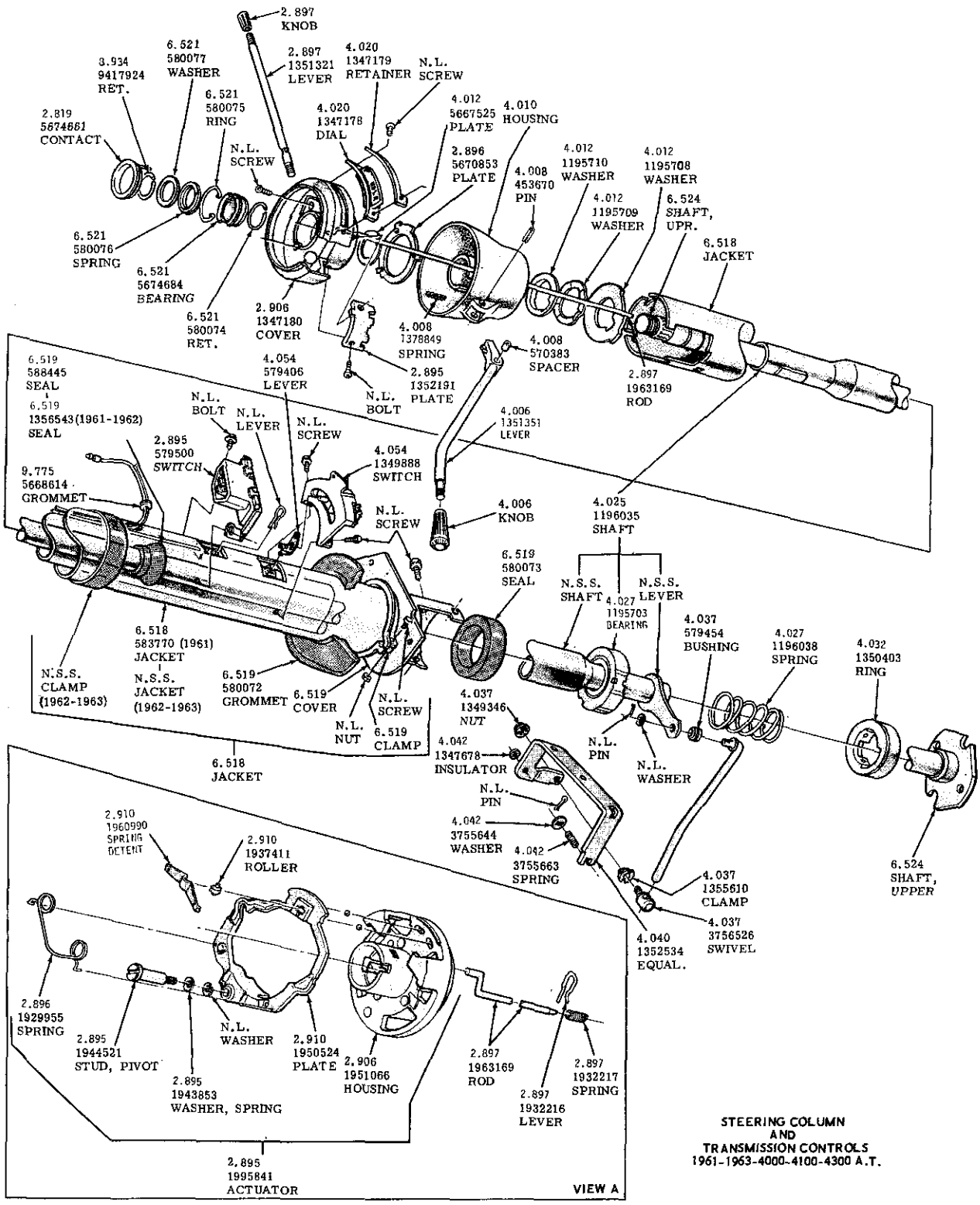

STEERING COLUMN AND TRANSMISSION CONTROLS 1961-1963-4000-4100-4300 A.T.

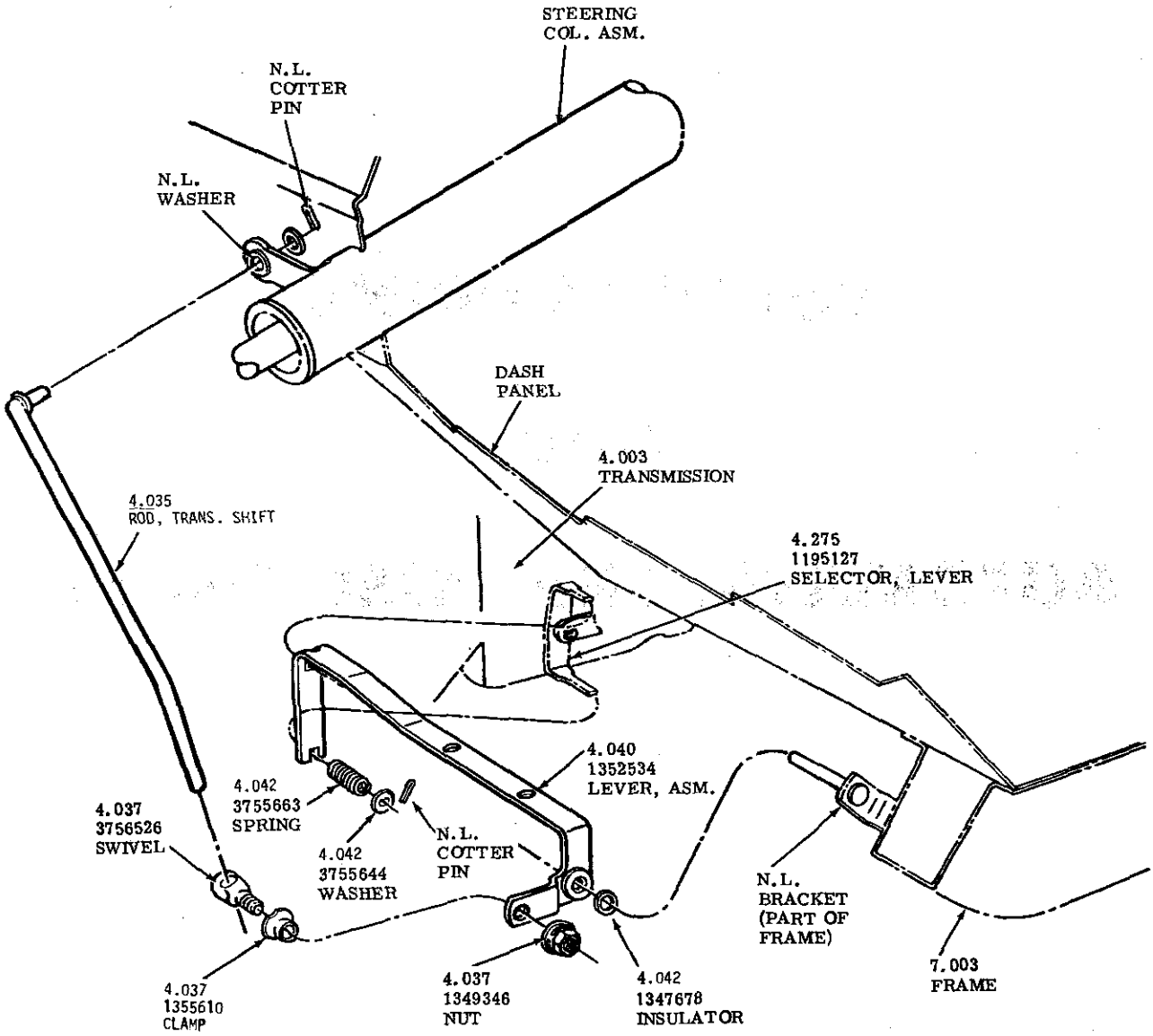

TRANSMISSION LOWER CONTROL
1961-1963-40-41-4300 A.T.

SUPER TURBINE

300

AUTOMATIC TRANSMISSIONS

MEMORANDA

SUPER TURBINE 300 AUTOMATIC TRANSMISSION

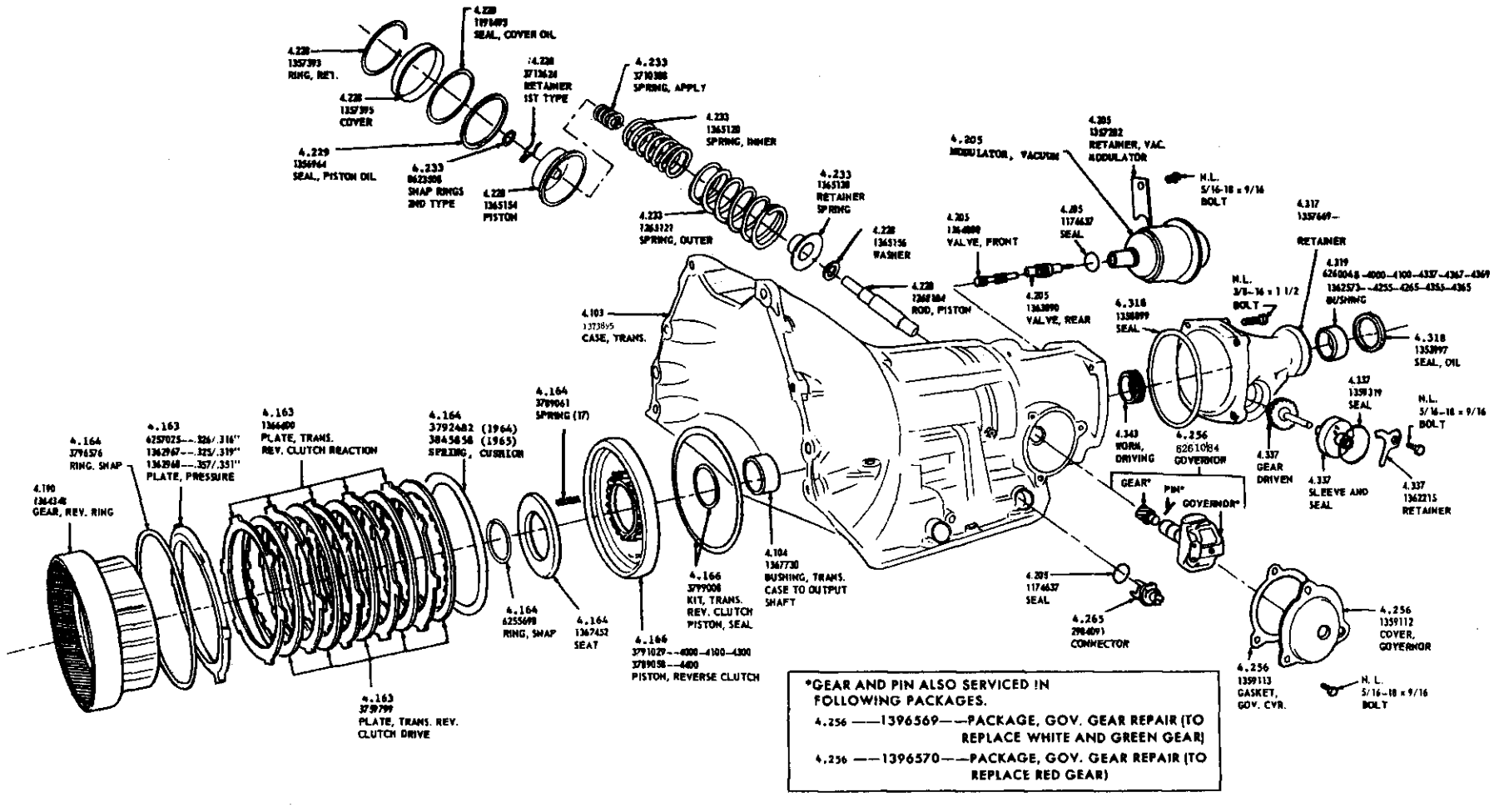

1964-1965 SUPER TURBINE 300-AUTO TRANS.

SUPER TURBINE 300 AUTOMATIC TRANSMISSION

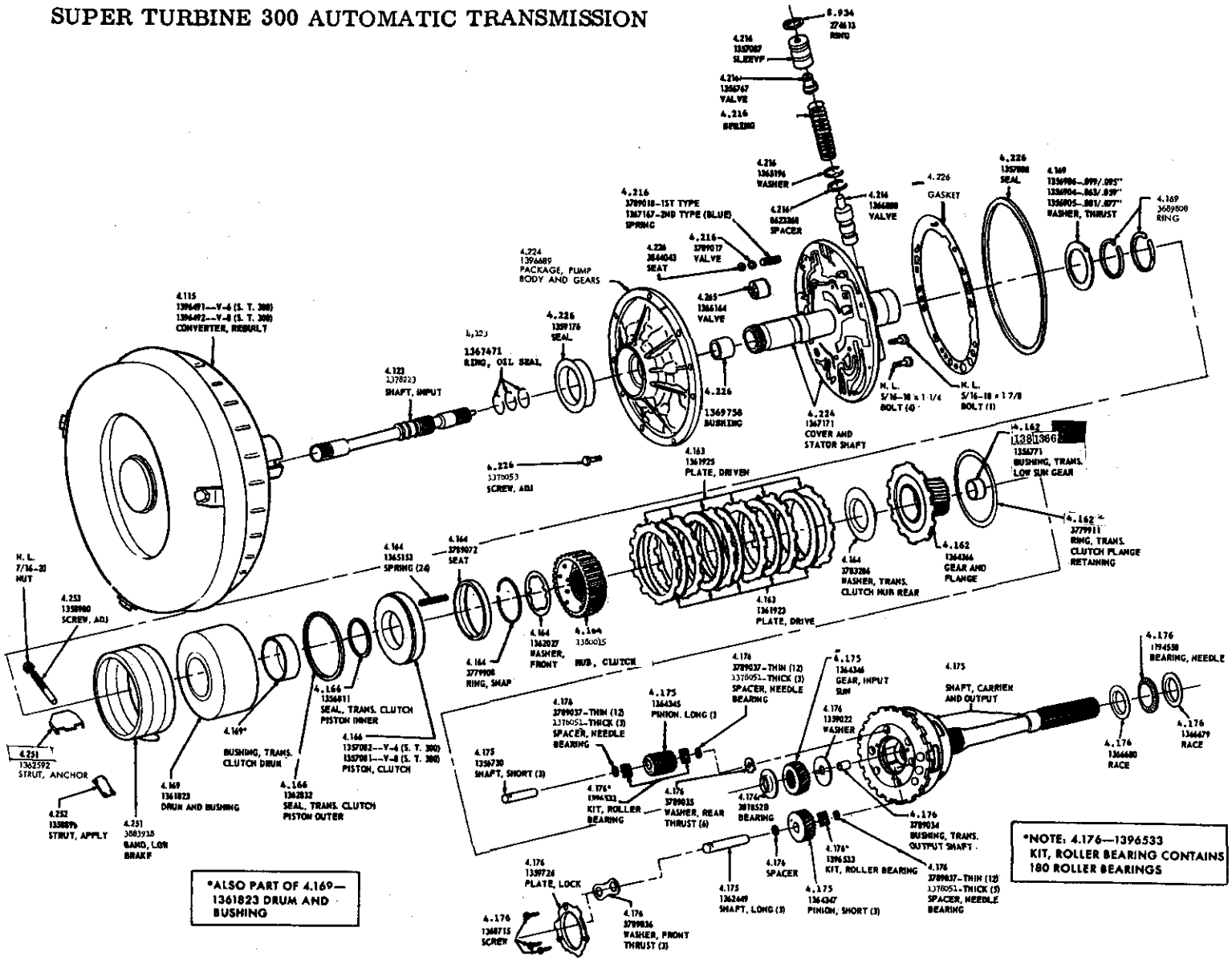

1964-1965 SUPER TURBINE 300-AUTO TRANS.

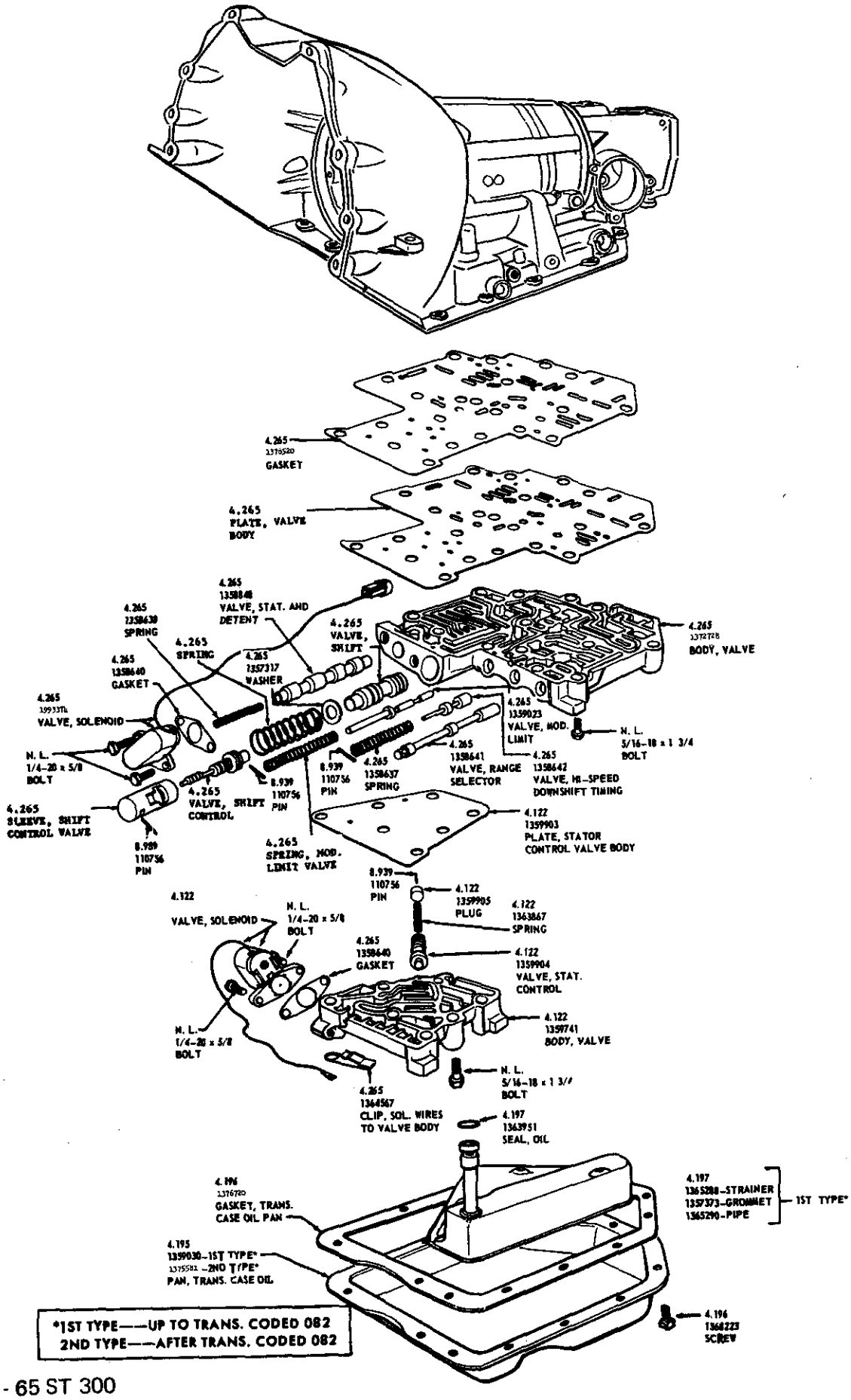

1964 - 65 ST 300

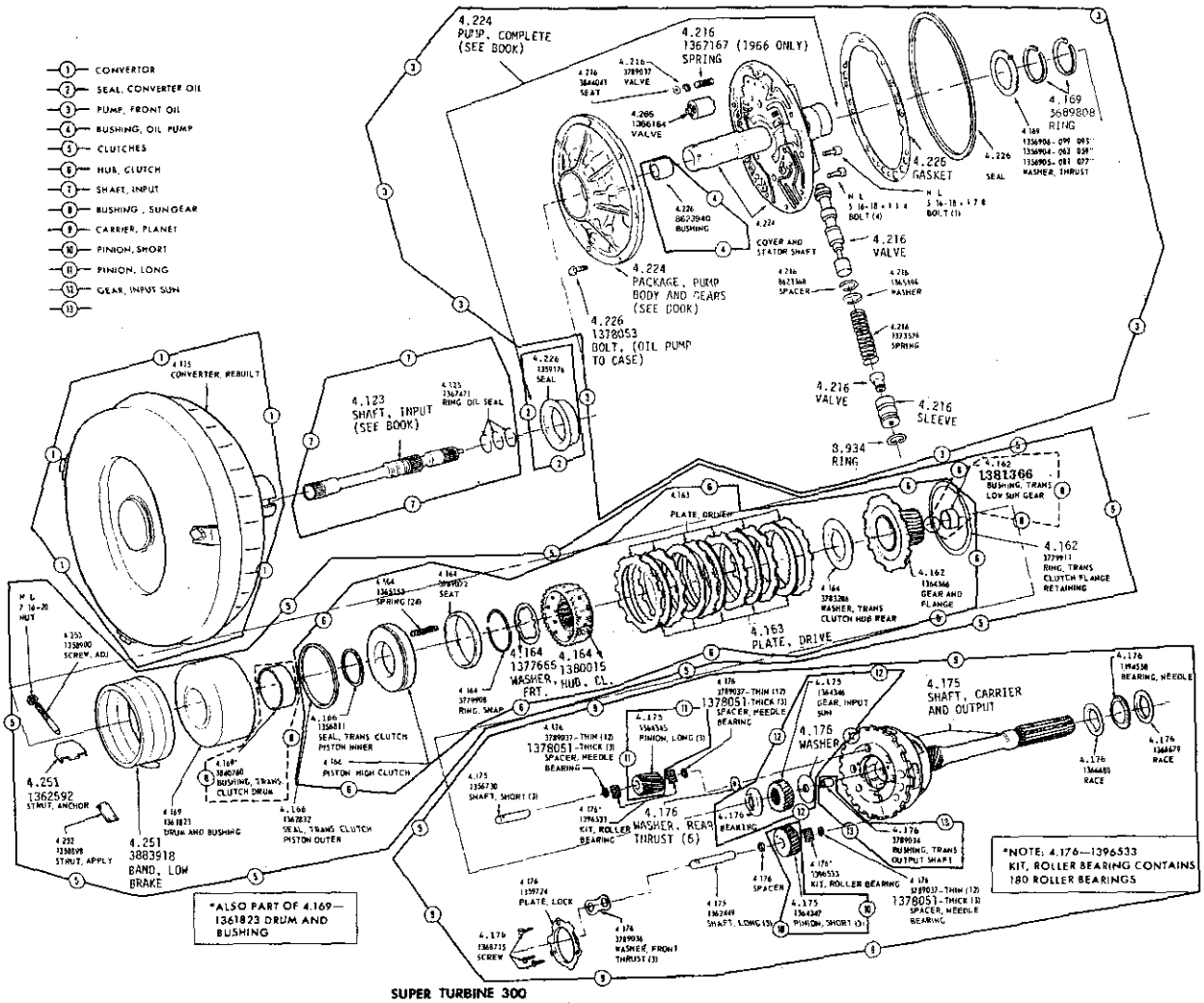

SUPER TURBINE 300
AUTOMATIC TRANSMISSION
1966- 1969

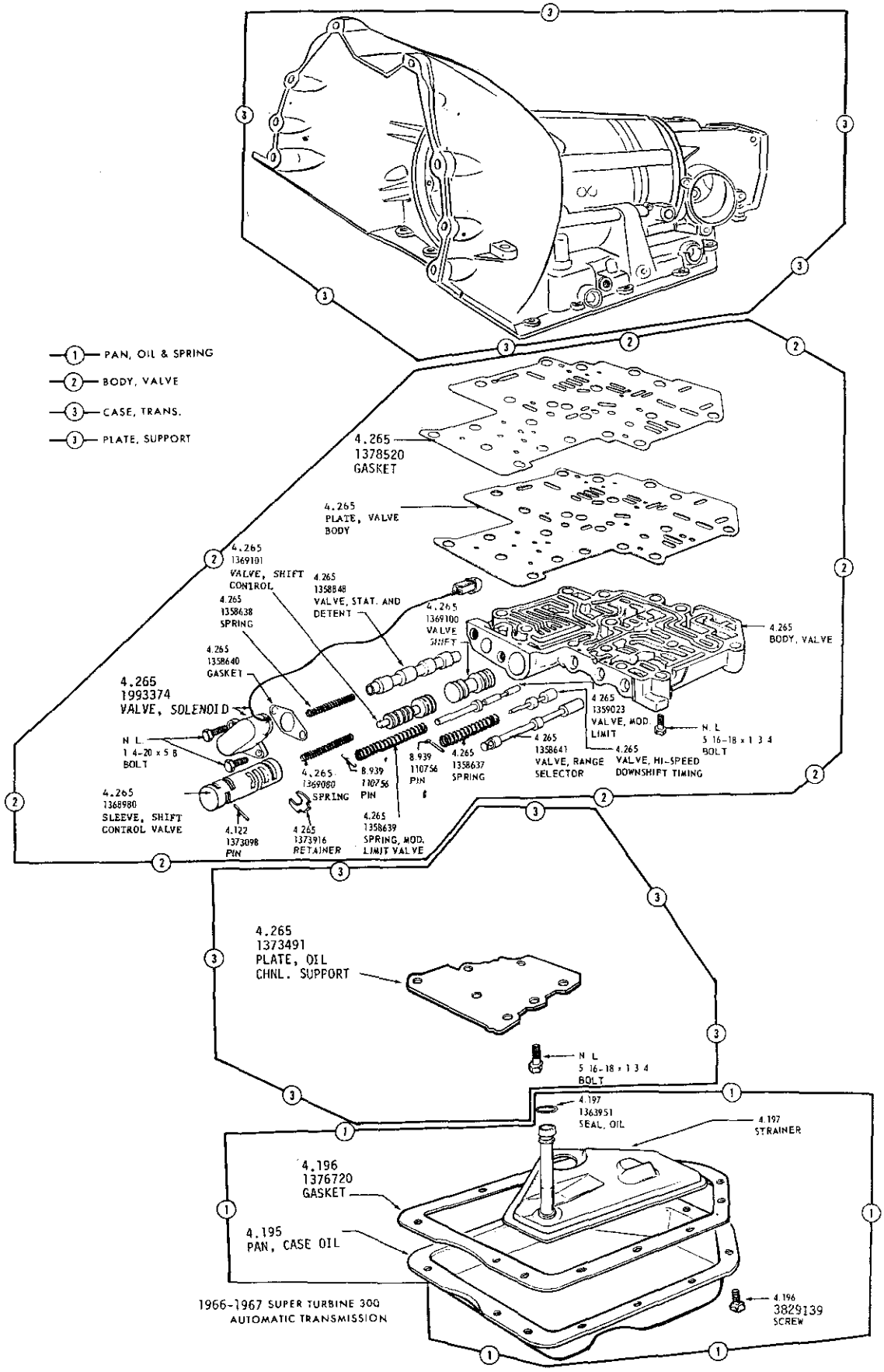

1966-1967 SUPER TURBINE 300 AUTOMATIC TRANSMISSION

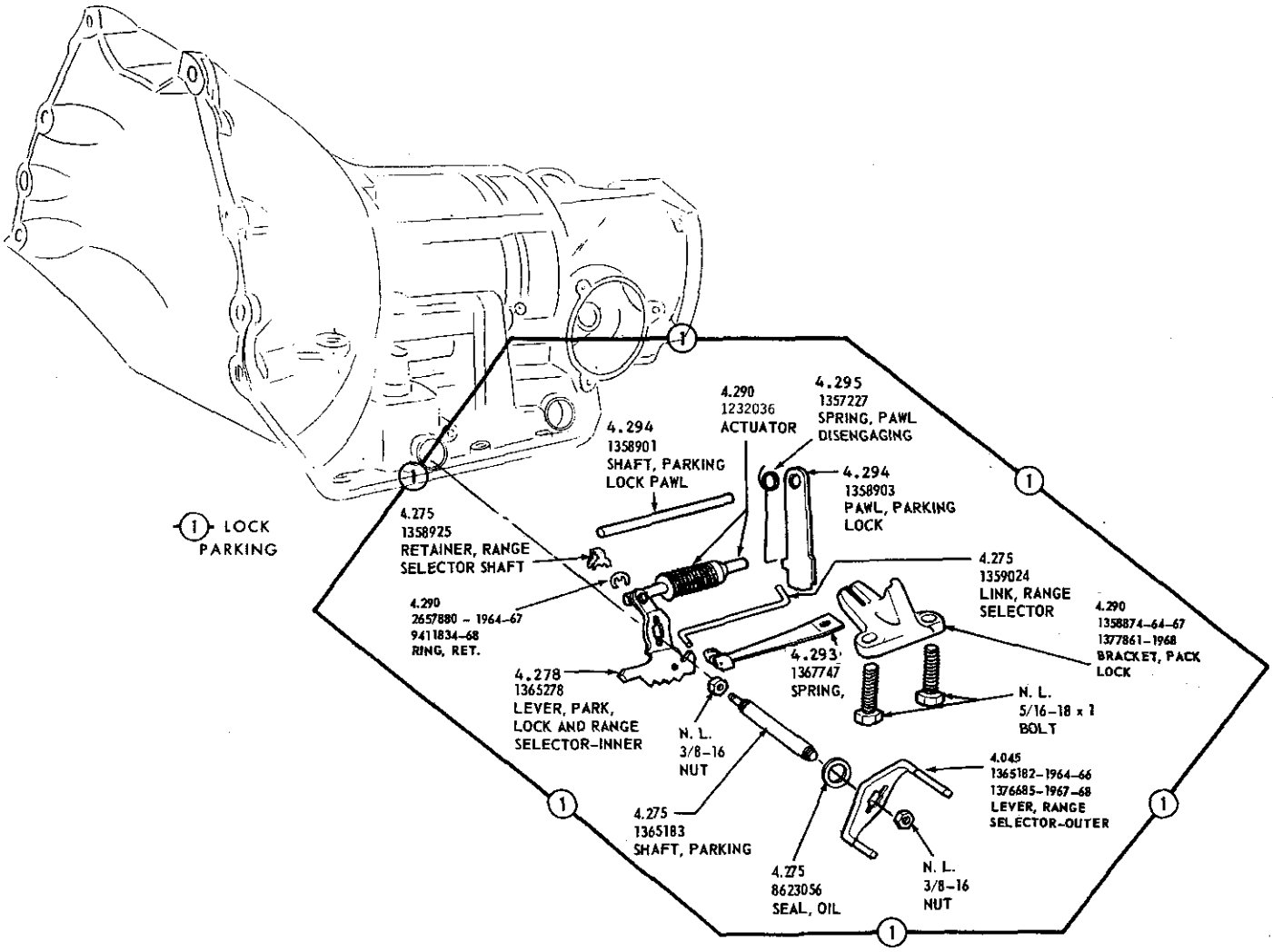

SUPER TURBINE 300

RANGE SELECTOR -INNER & OUTER

1967-69

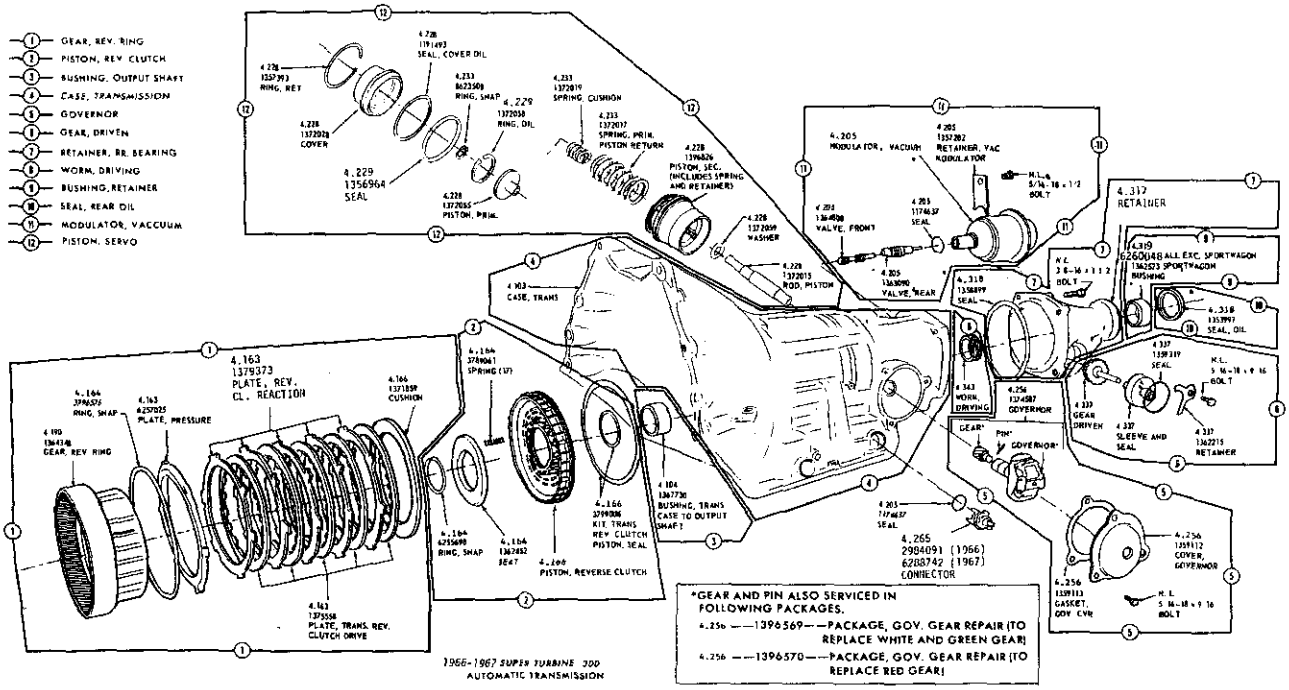

1966-1967 SUPER TURBINE 300
AUTOMATIC TRANSMISSION

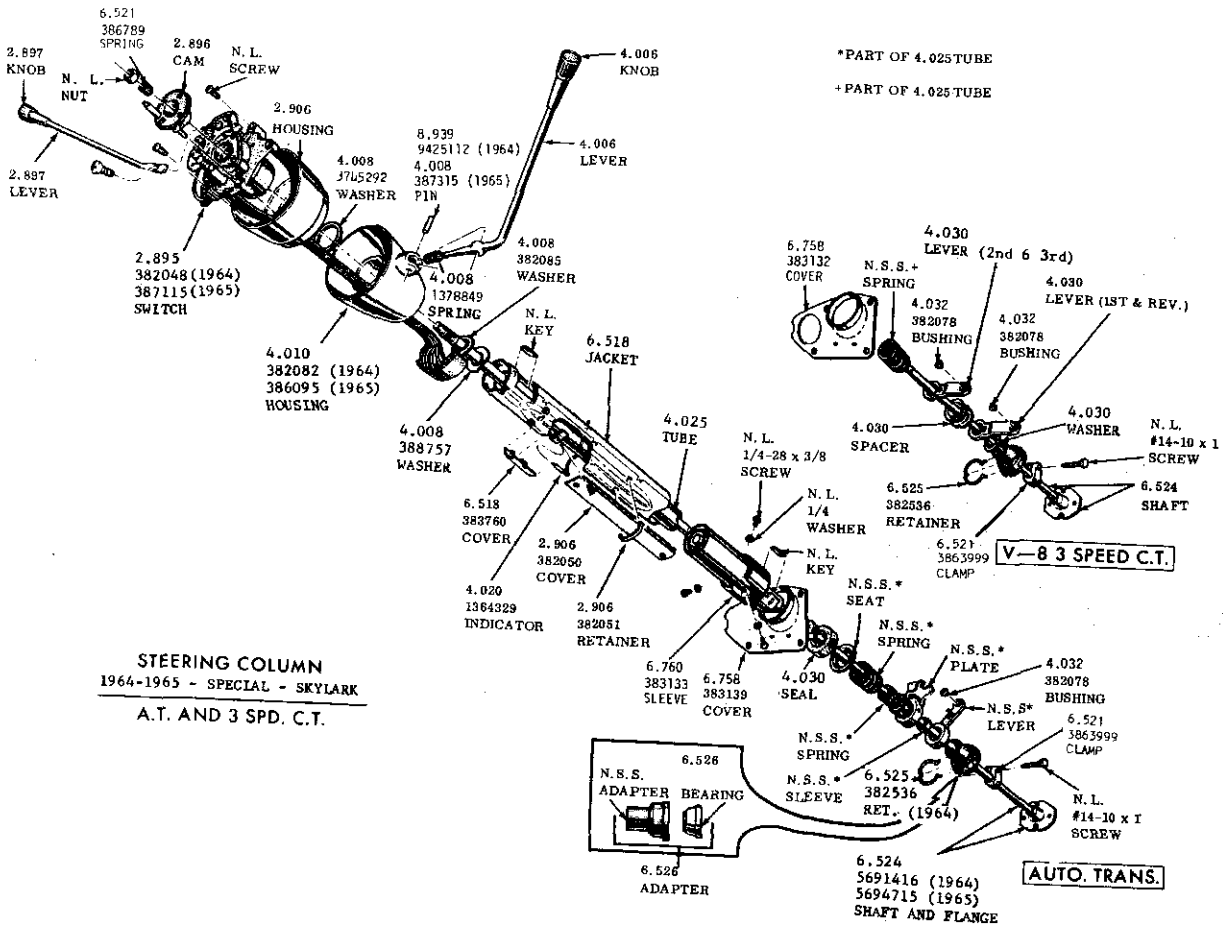

STEERING COLUMN
1964-1965 - SPECIAL - SKYLARK
A.T. AND 3 SPD. C.T.

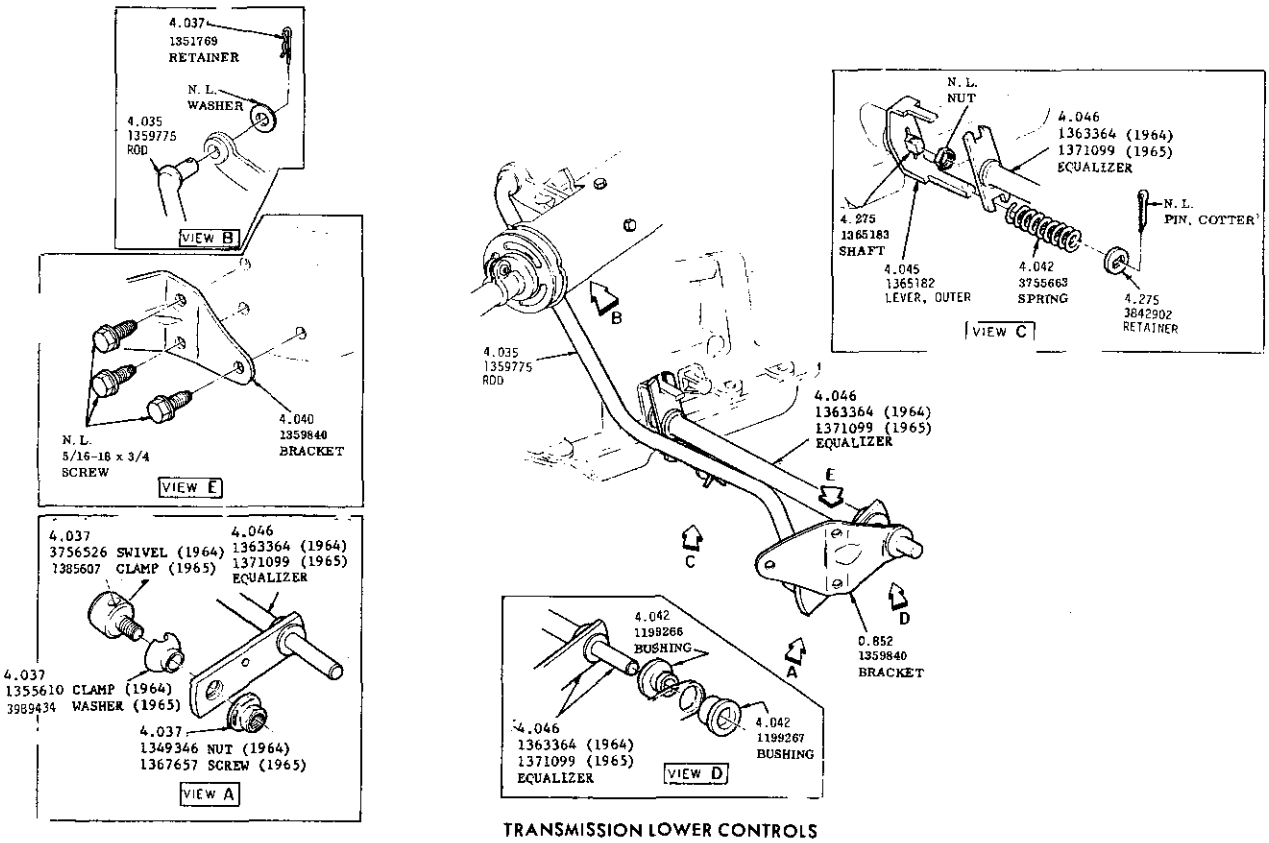

TRANSMISSION LOWER CONTROLS

1964-1965 SPECIAL - SKYLARK

AUTO. TRANS.

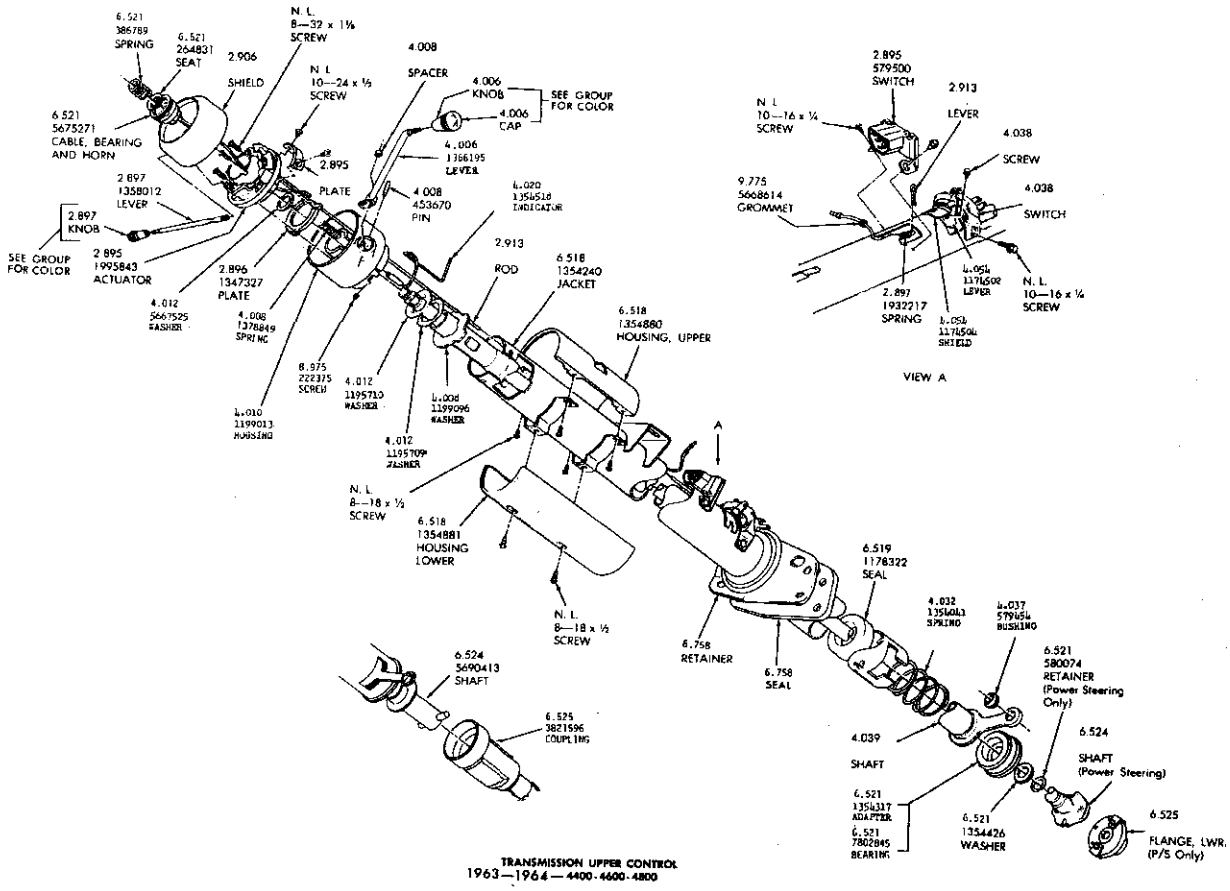

TRANSMISSION UPPER CONTROL
1963—1964—4400-4600-4800

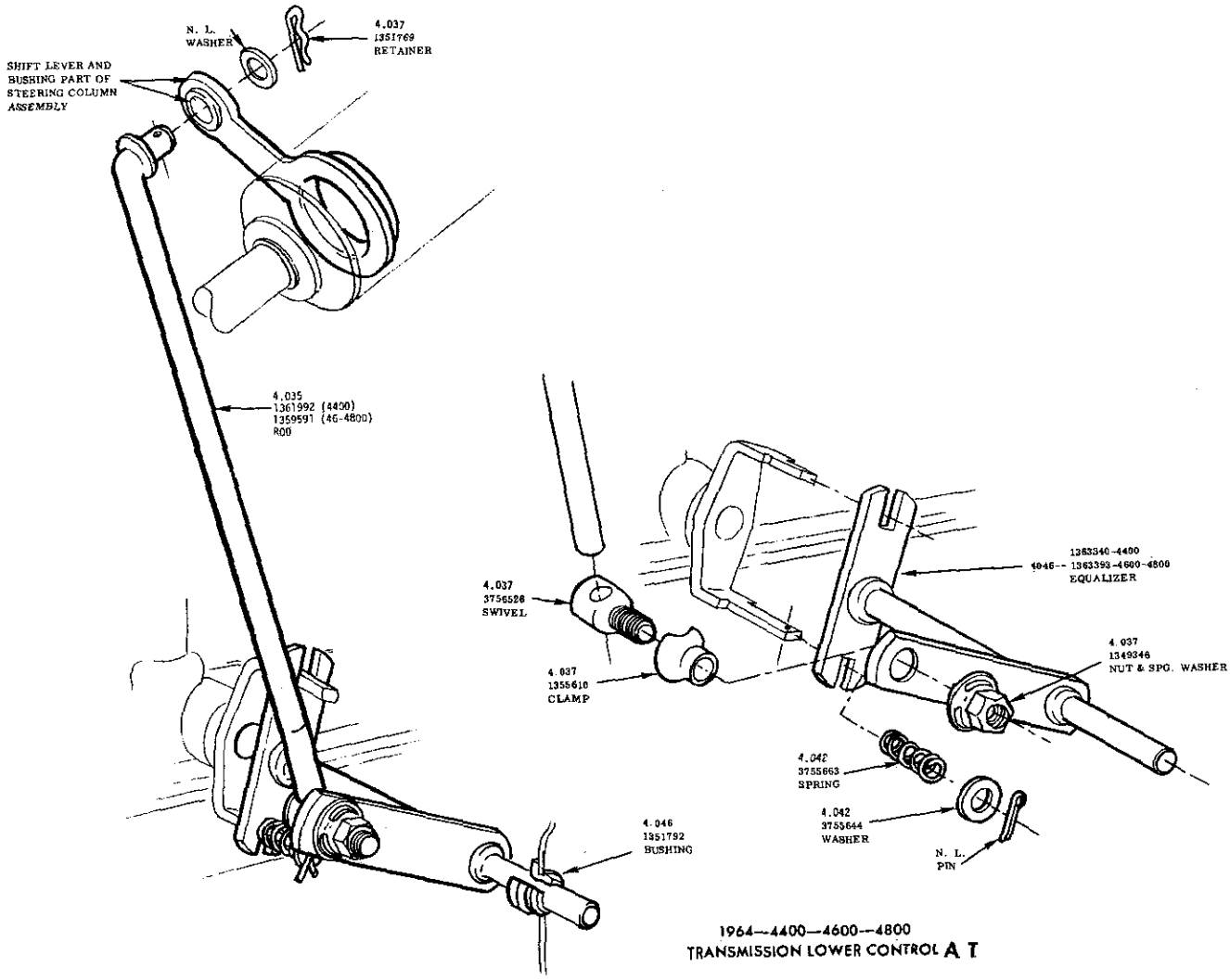

1964—4400—4600—4800
TRANSMISSION LOWER CONTROL A T

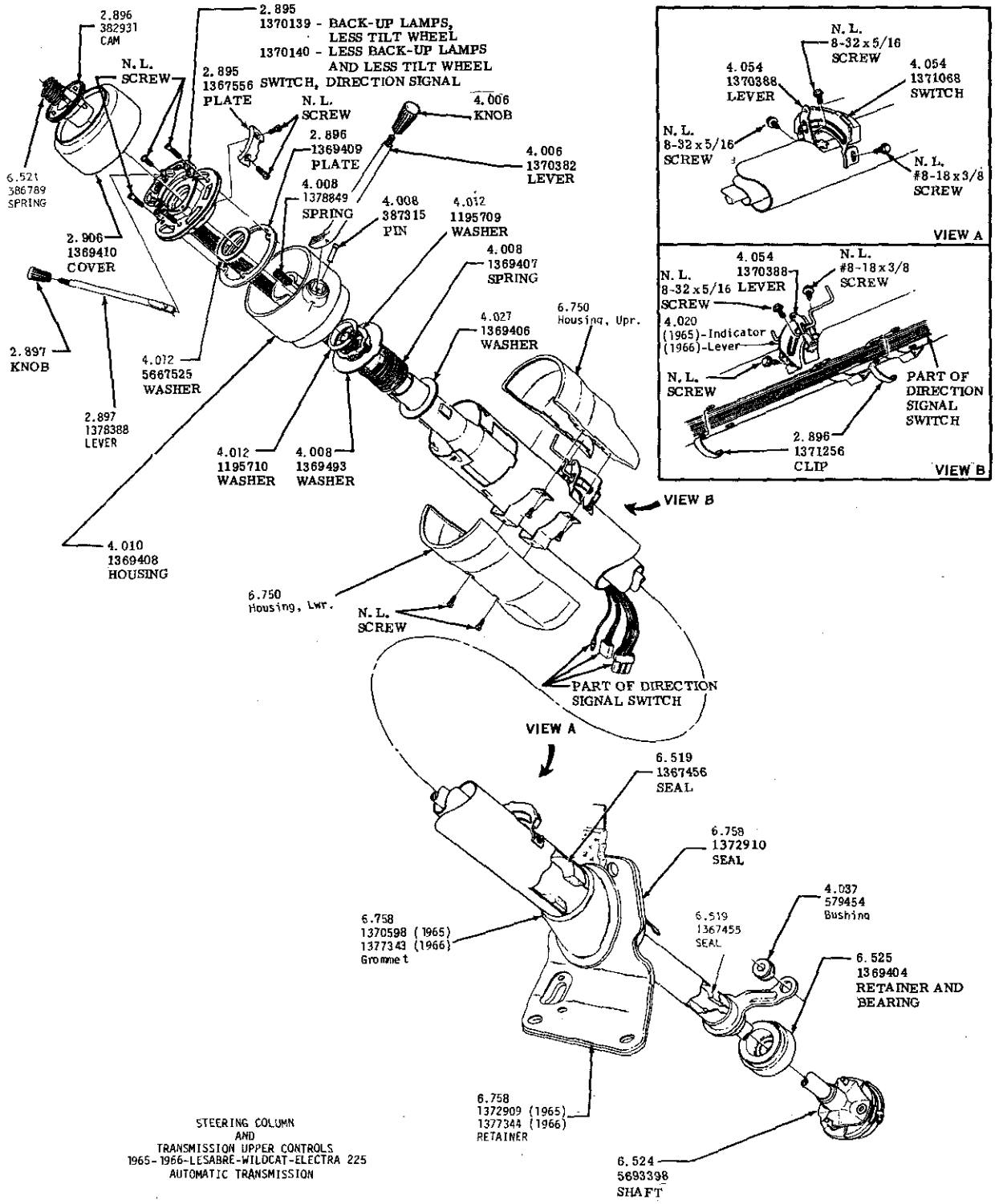

STEERING COLUMN
AND
TRANSMISSION UPPER CONTROLS
1965-1966-LESABRE-WILDCAT-ELECTRA 225
AUTOMATIC TRANSMISSION

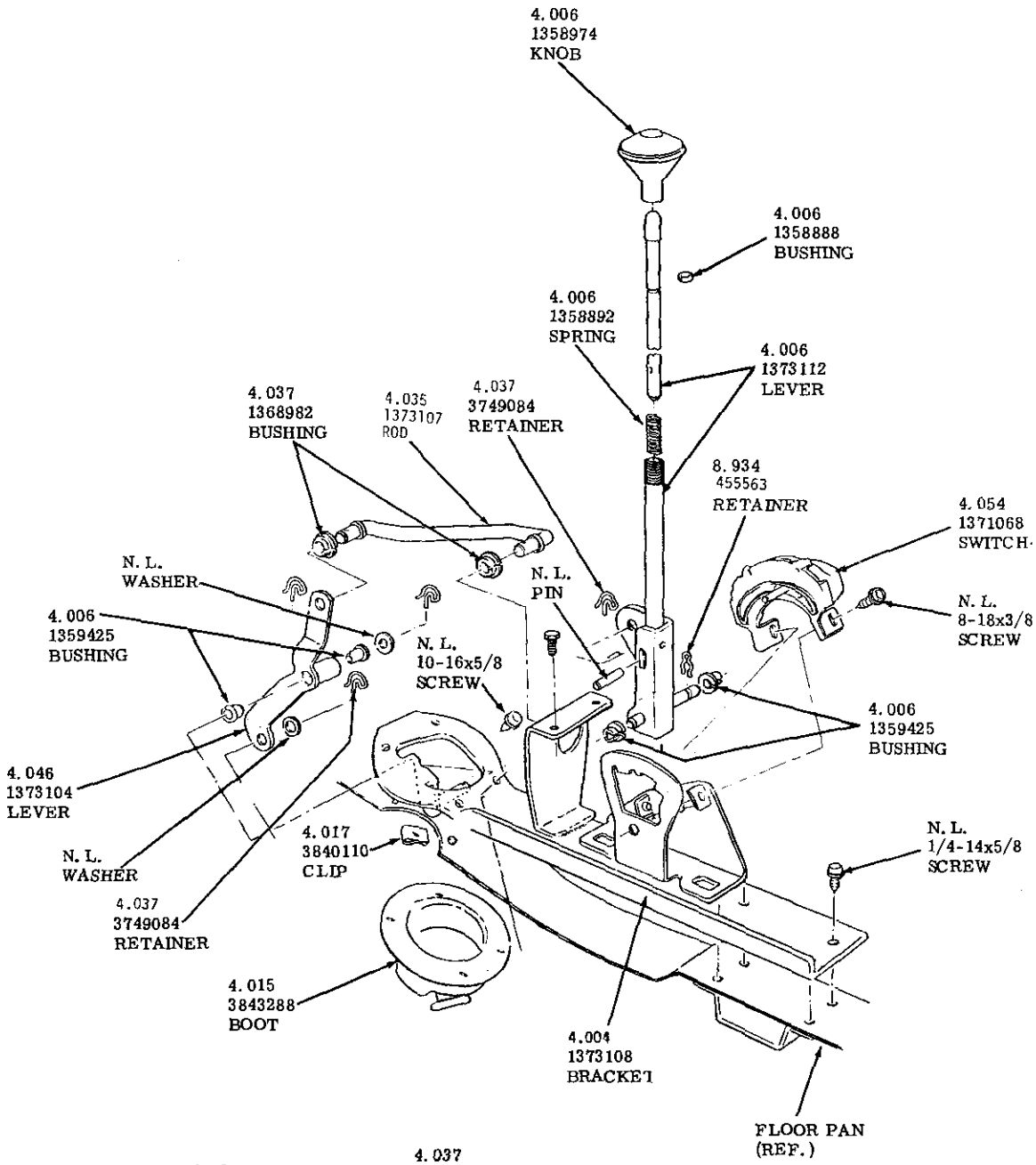

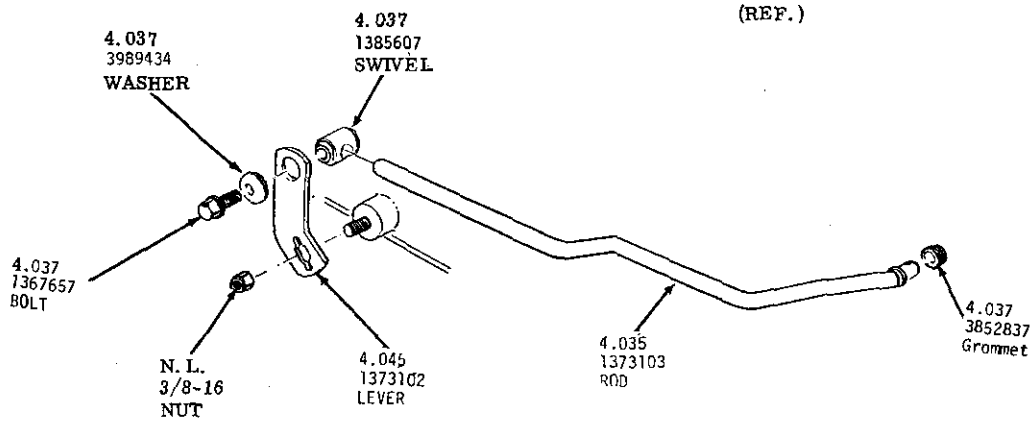

TRANSMISSION CONTROLS
1965 - 1966 -SPECIAL-SKYLARK-GRAN SPORT
WITH LONG CONSOLE

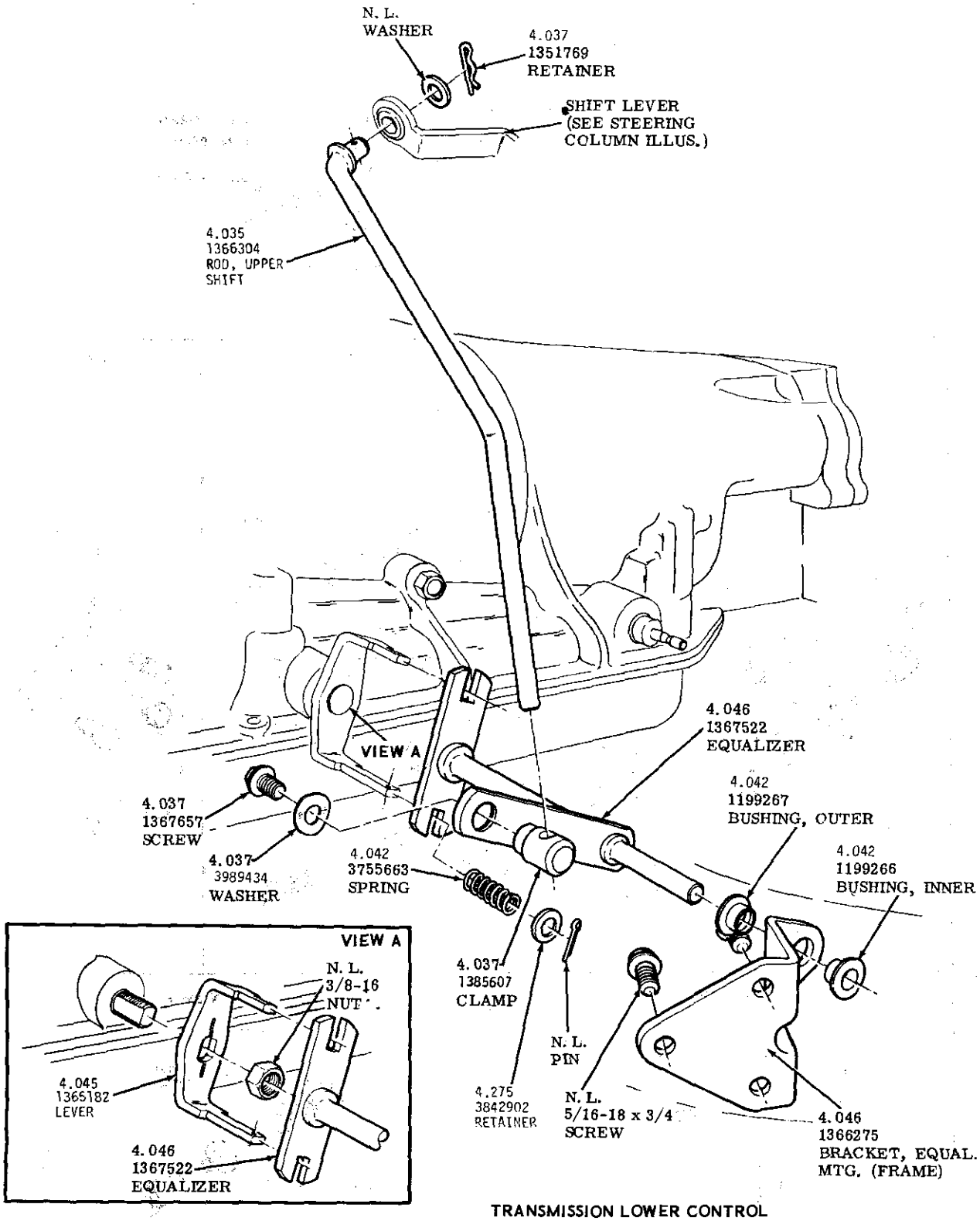

TRANSMISSION LOWER CONTROL
1965 - LESABRE, WILDCAT, ELECTRA 225
AUTOMATIC TRANSMISSION

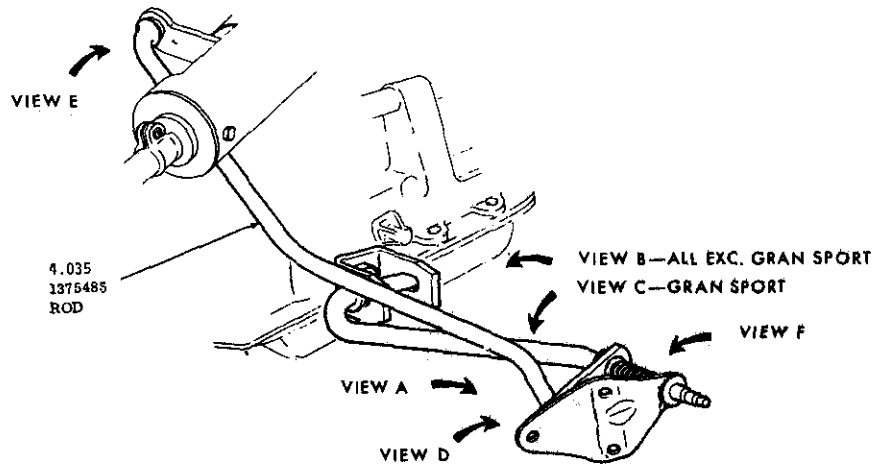

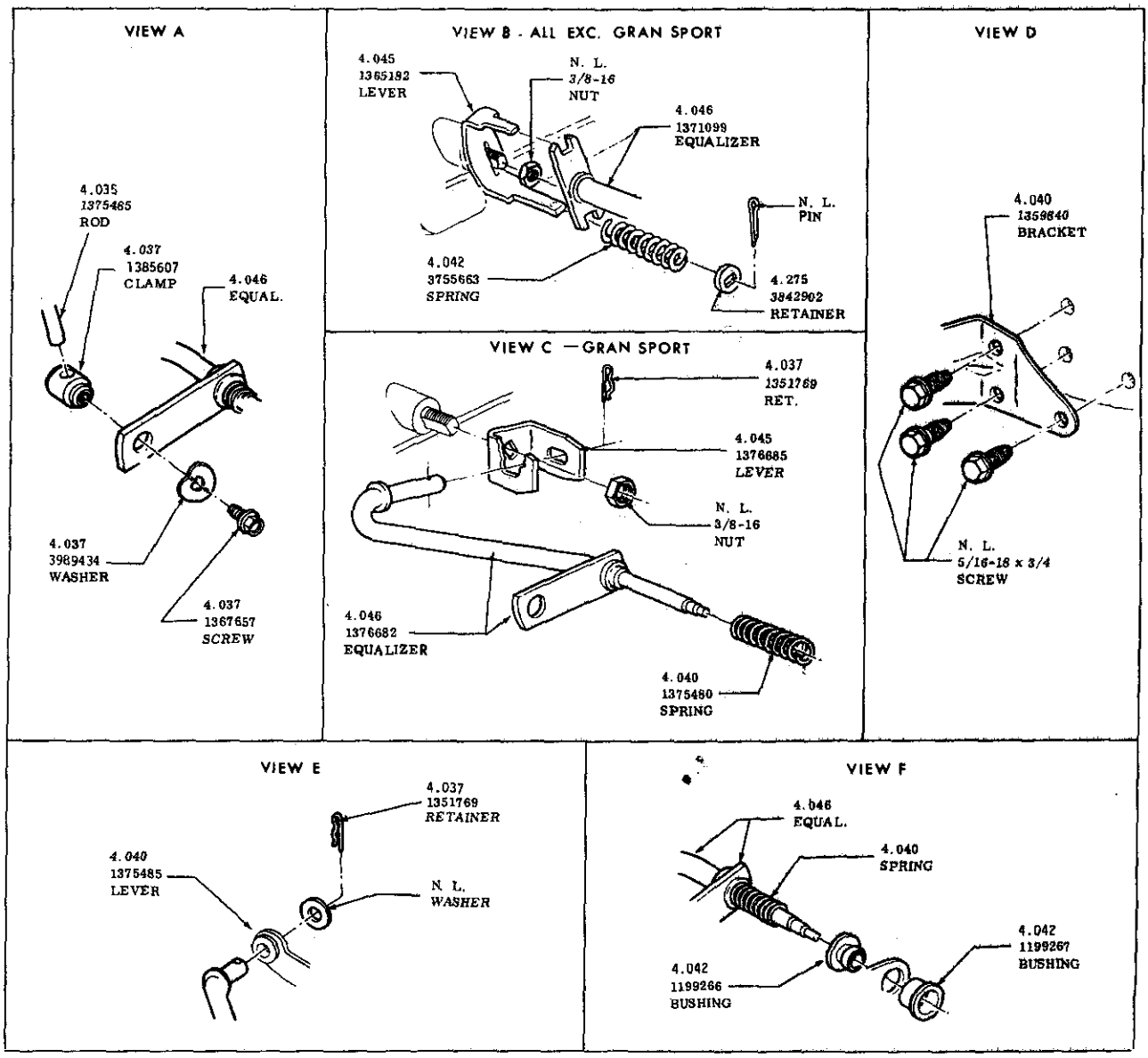

TRANSMISSION LOWER CONTROLS
1966—SPECIAL—SKYLARK—SKYLARK GRAN SPORT
AUTOMATIC TRANSMISSION—COLUMN SHIFT

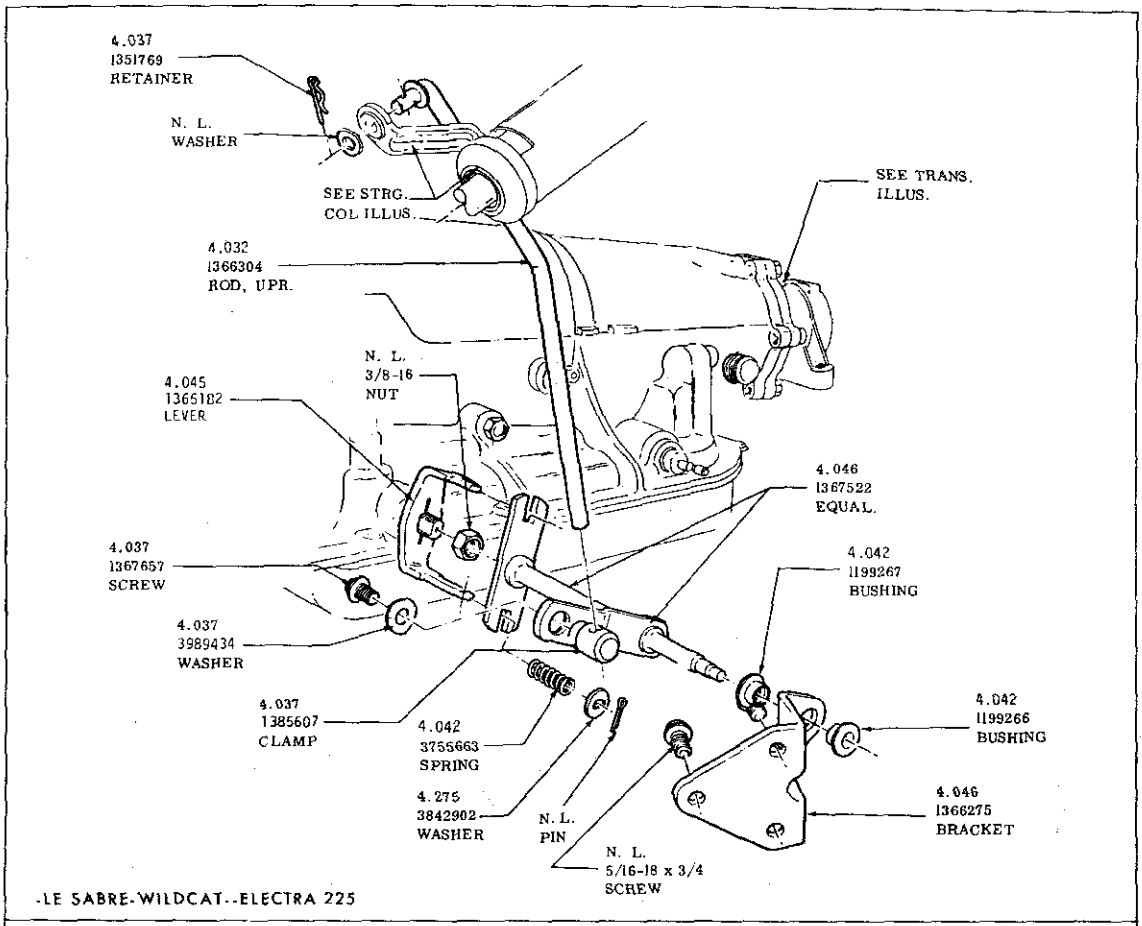

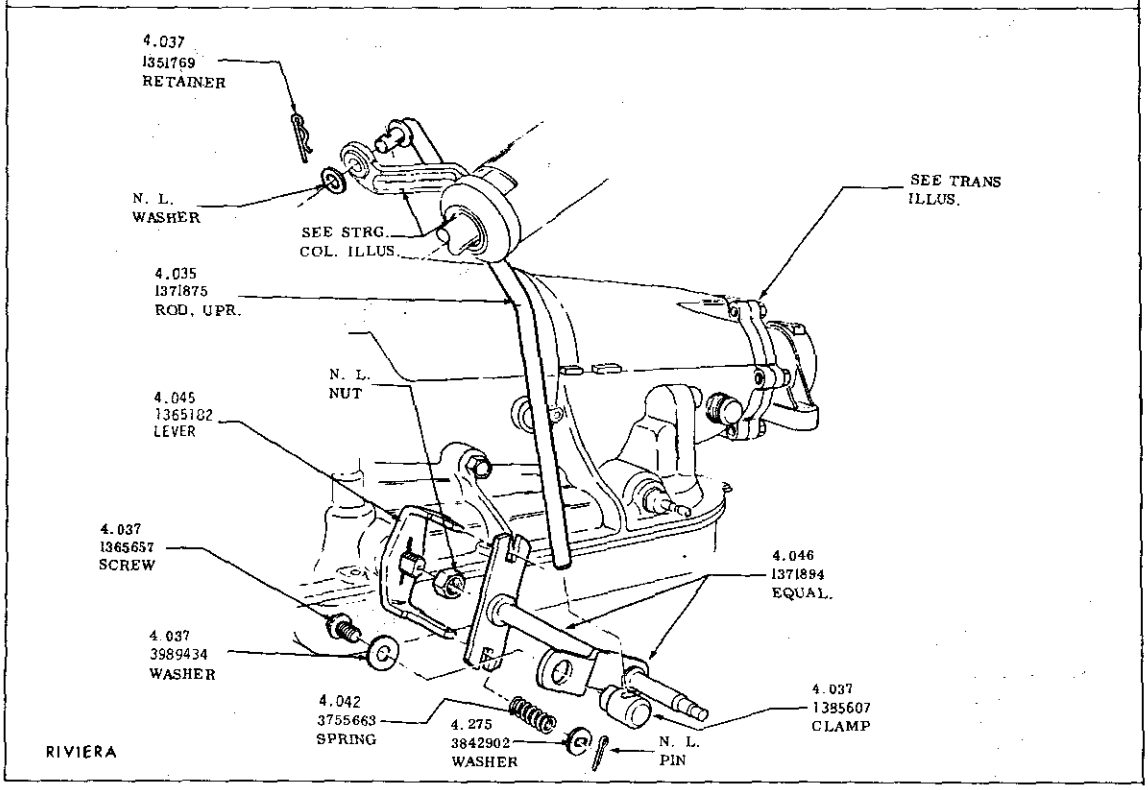

AUTOMATIC TRANSMISSION LOWER CONTROLS
1966 LE SABRE. WILDCAT ELECTRA 225 RIVIERA

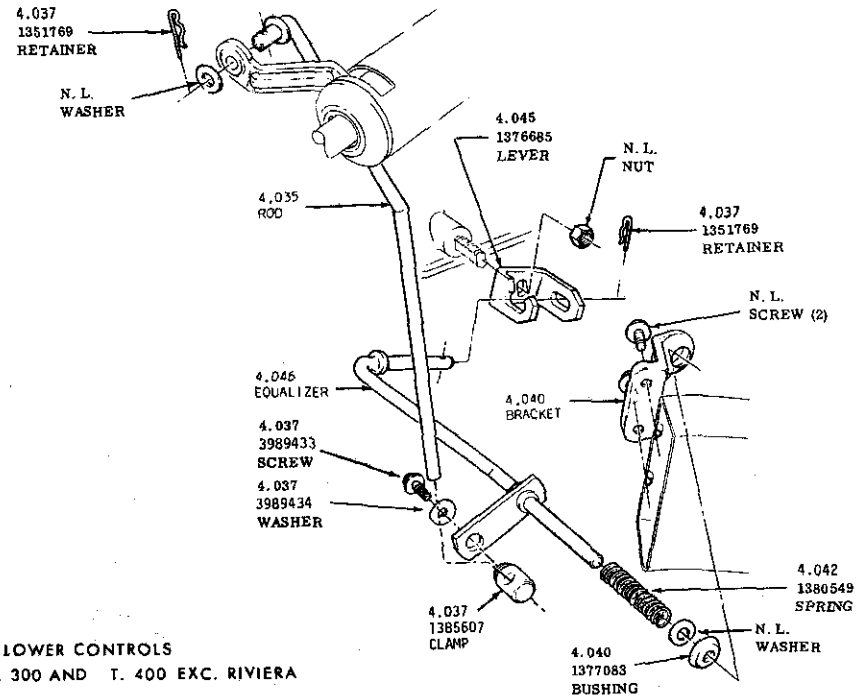

TRANSMISSION LOWER CONTROLS
1967-1972 -ALL— T. 300 AND T. 400 EXC. RIVIERA

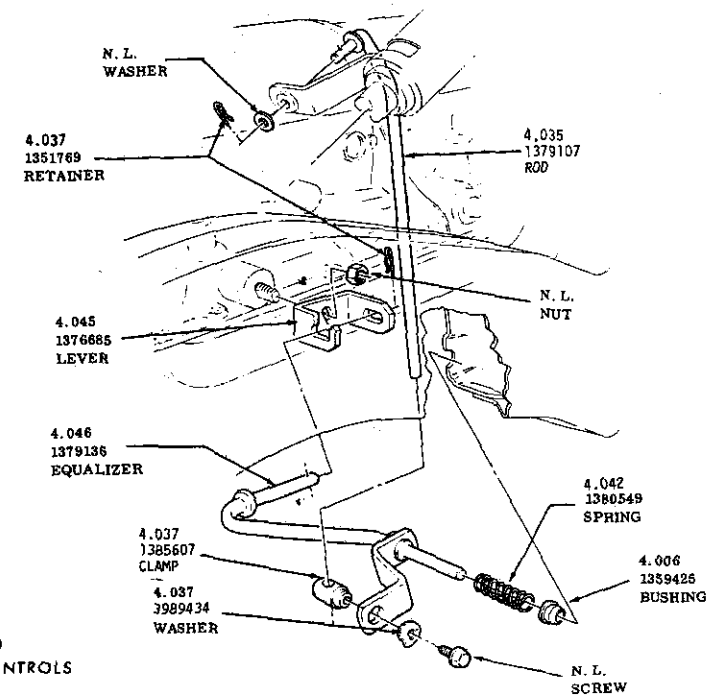

SUPER TURBINE 300
TRANSMISSION LOWER CONTROLS
RIVIERA—T. 400
1967-1972

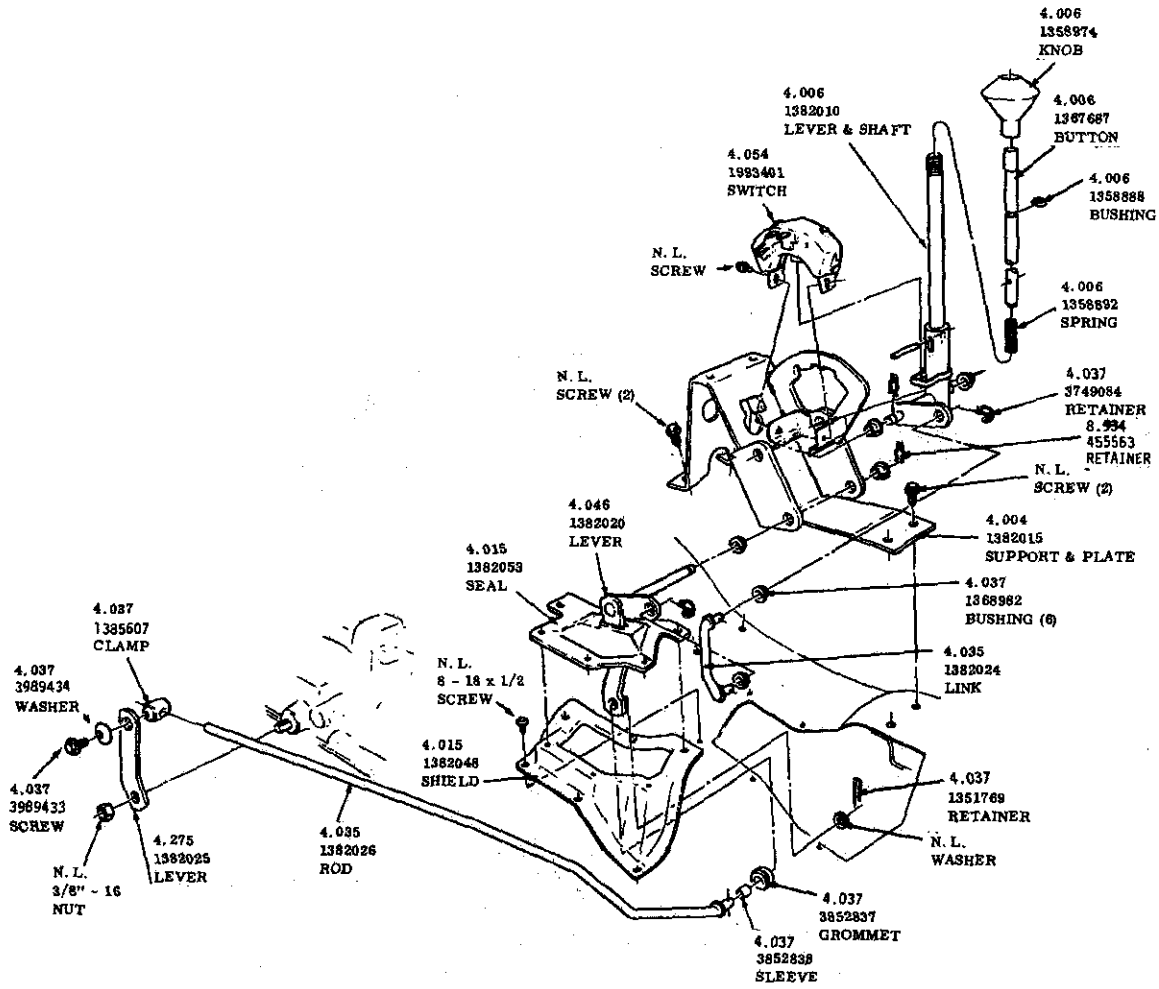

CONSOLE SHIFT

1967—"A" BODY

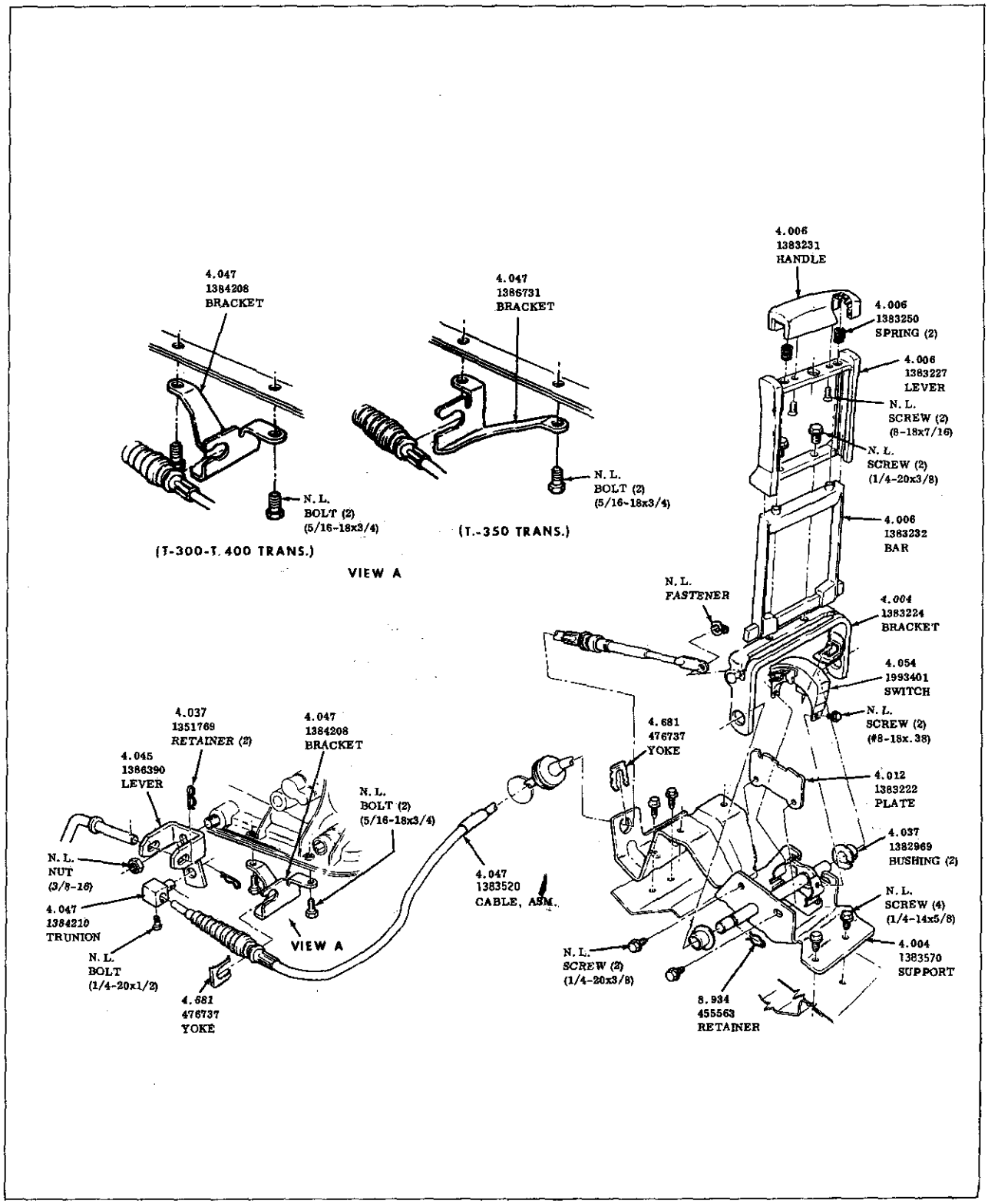

SUPER TURBINE 300
AUTOMATIC TRANSMISSION CONTROL
(CONSOLE) 1969-30-4000 & 6000

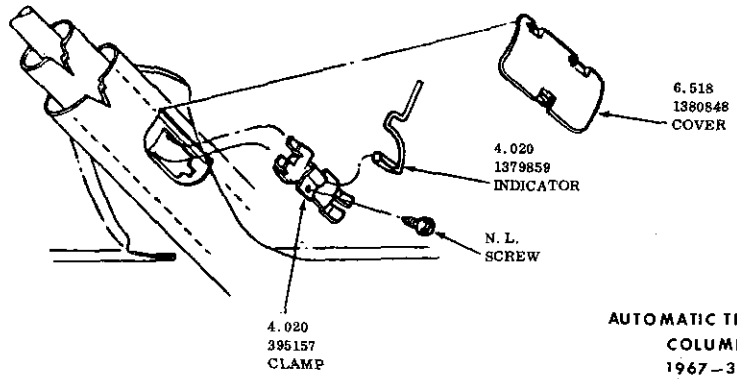

AUTOMATIC TRANSMISSION
COLUMN SHIFT
1967–30–4000

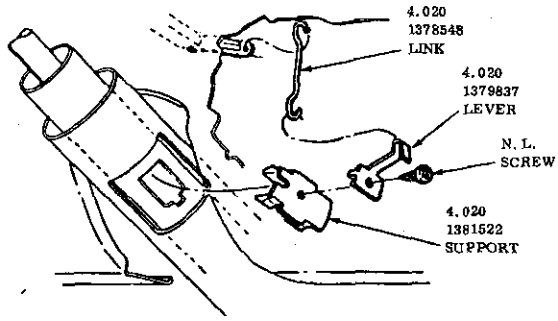

AUTOMATIC TRANSMISSION
COLUMN SHIFT
1967–50–60–8000

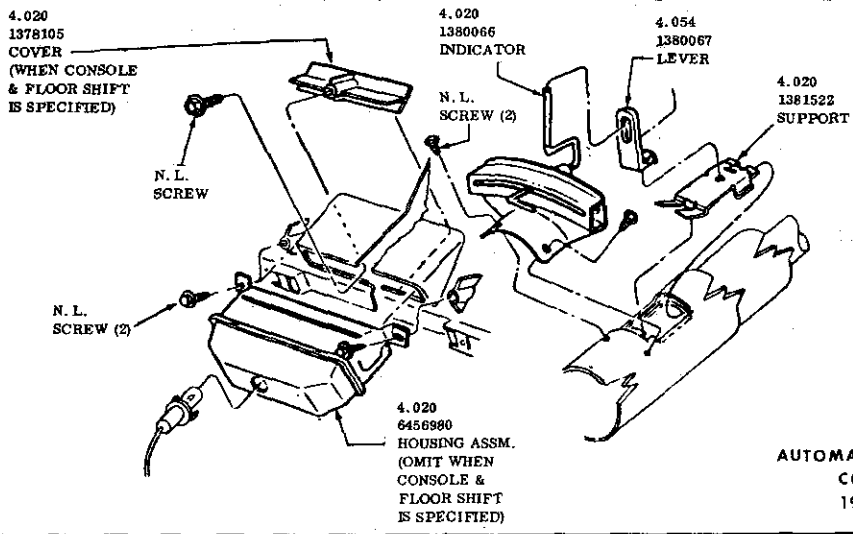

AUTOMATIC TRANSMISSION
COLUMN SHIFT
1967–RIVIERA

TRANSMISSION **SHIFT INDICATOR**
1967–ALL

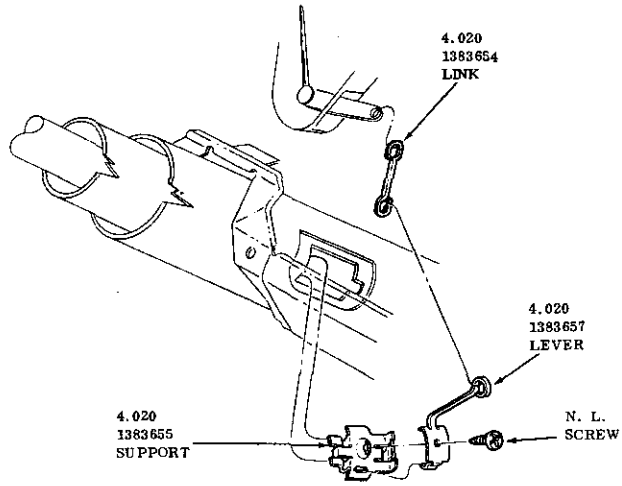

30-4000

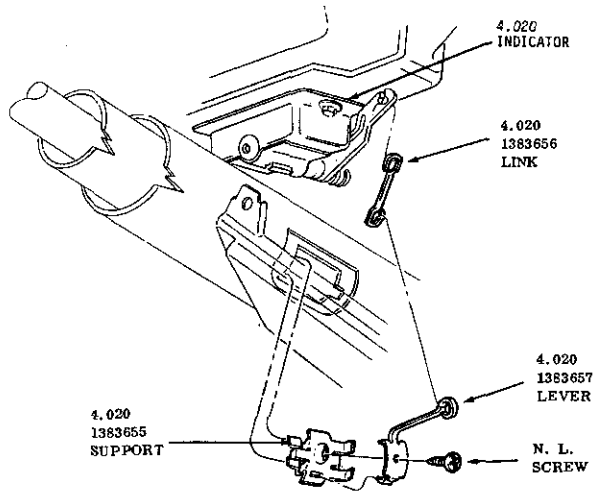

50-60-8000

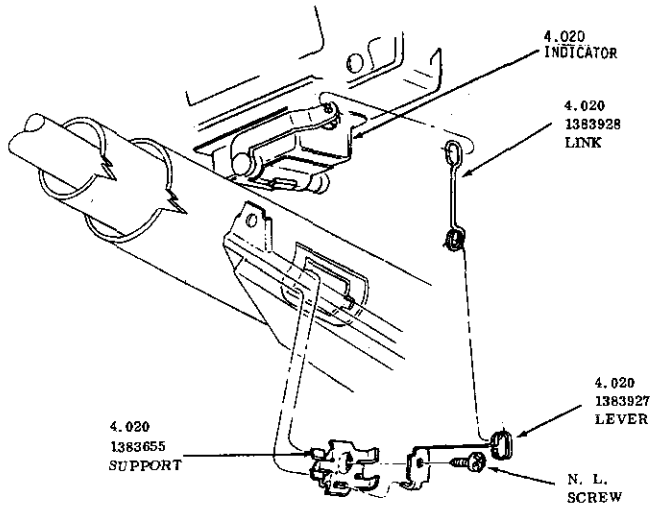

9000

TRANSMISSION SHIFT INDICATOR
1968-ALL

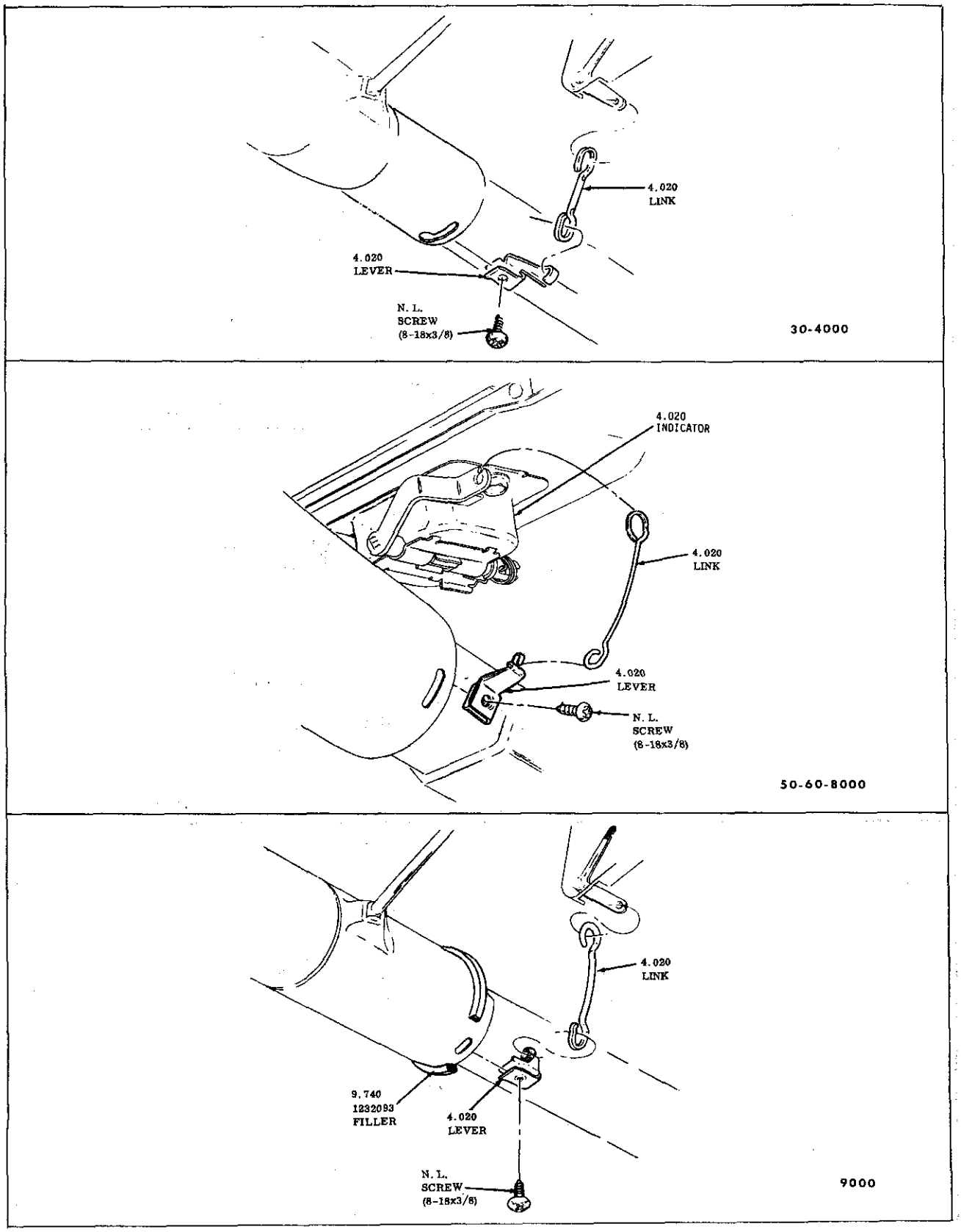

TRANSMISSION SHIFT INDICATOR
1969-ALL

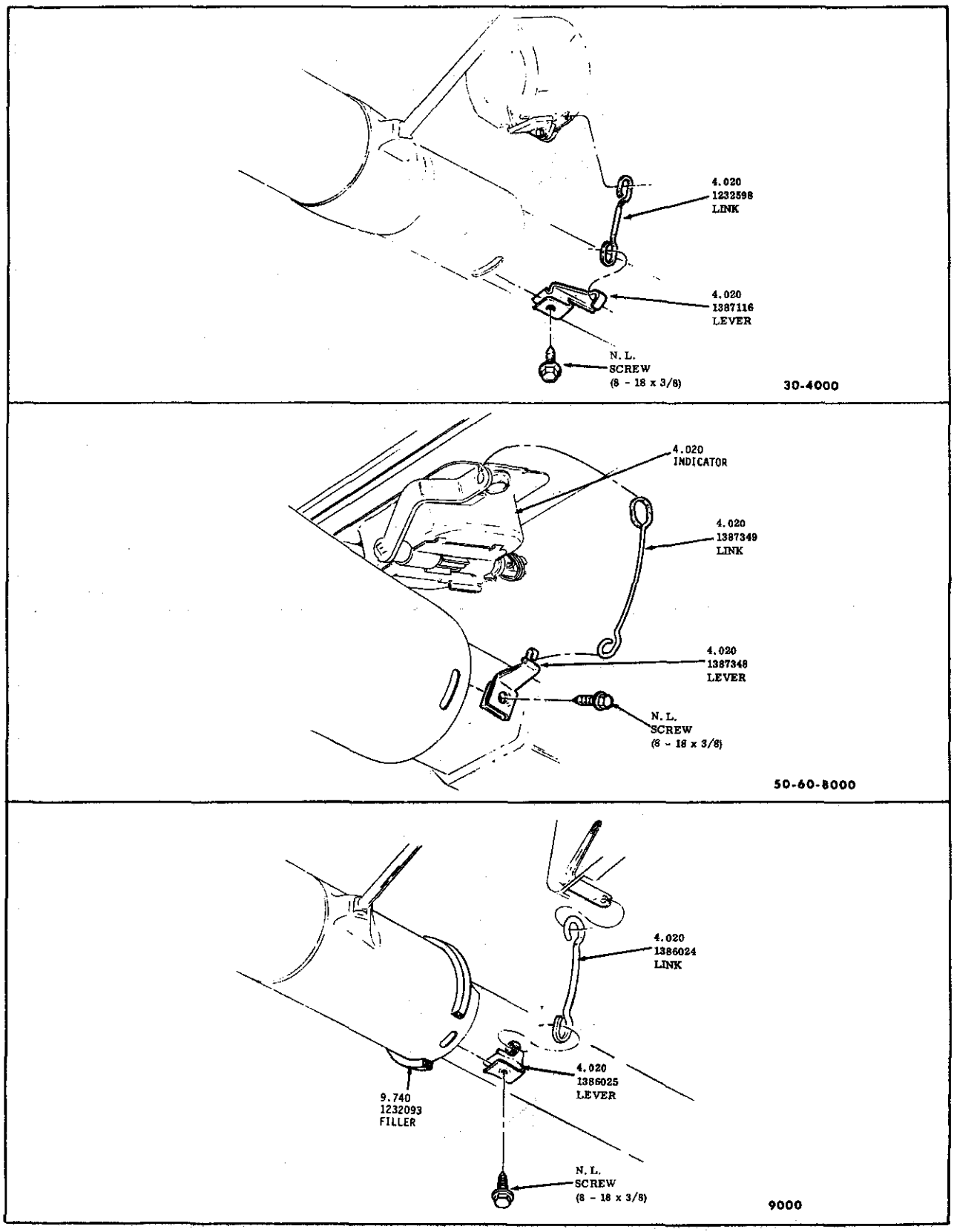

TRANSMISSION SHIFT INDICATOR
1970-ALL

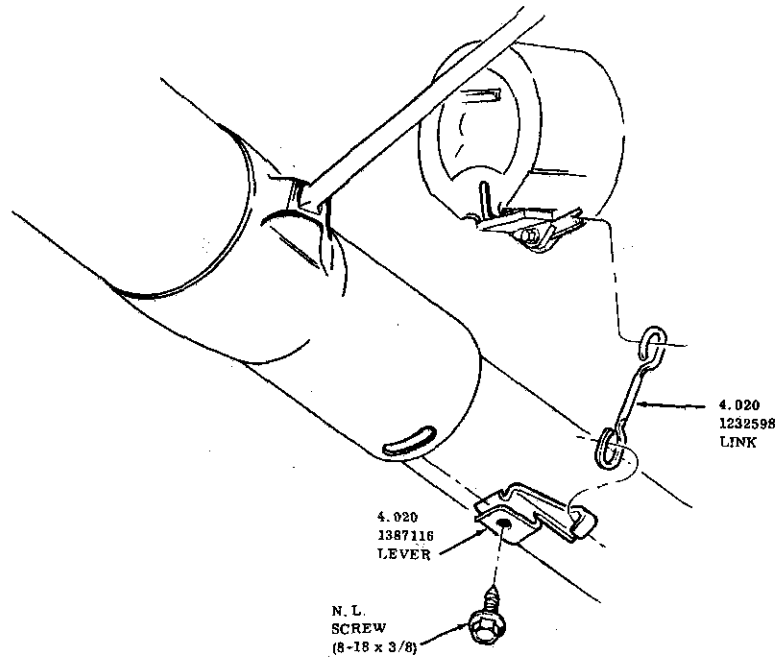

30-4000

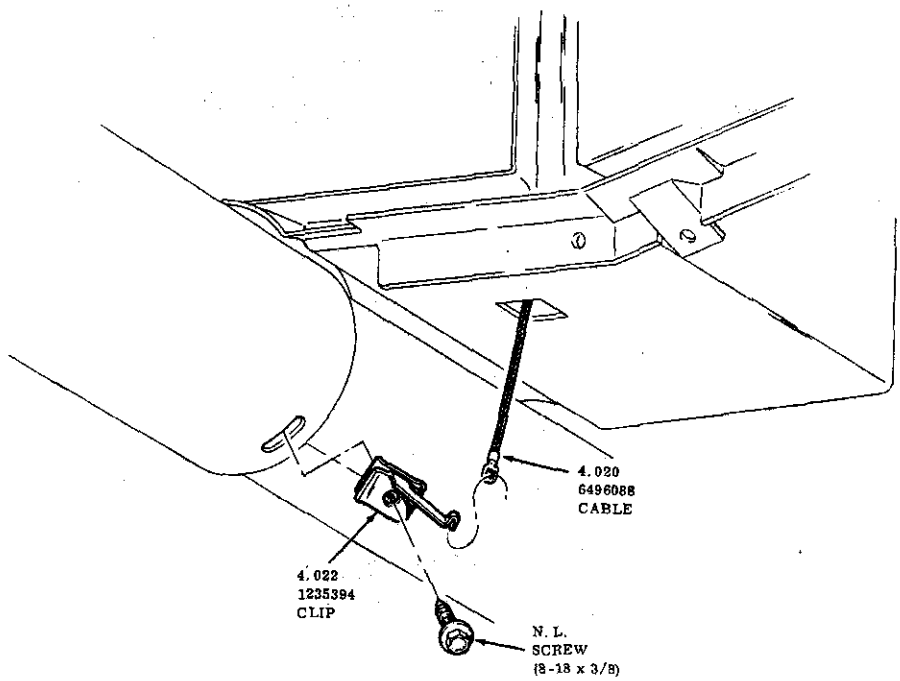

50-60-80-9000

SHIFT INDICATOR
1971-1972 ALL

TURBO

HYDRA-MATIC

350–375B

AUTOMATIC

TRANSMISSION

MEMORANDA

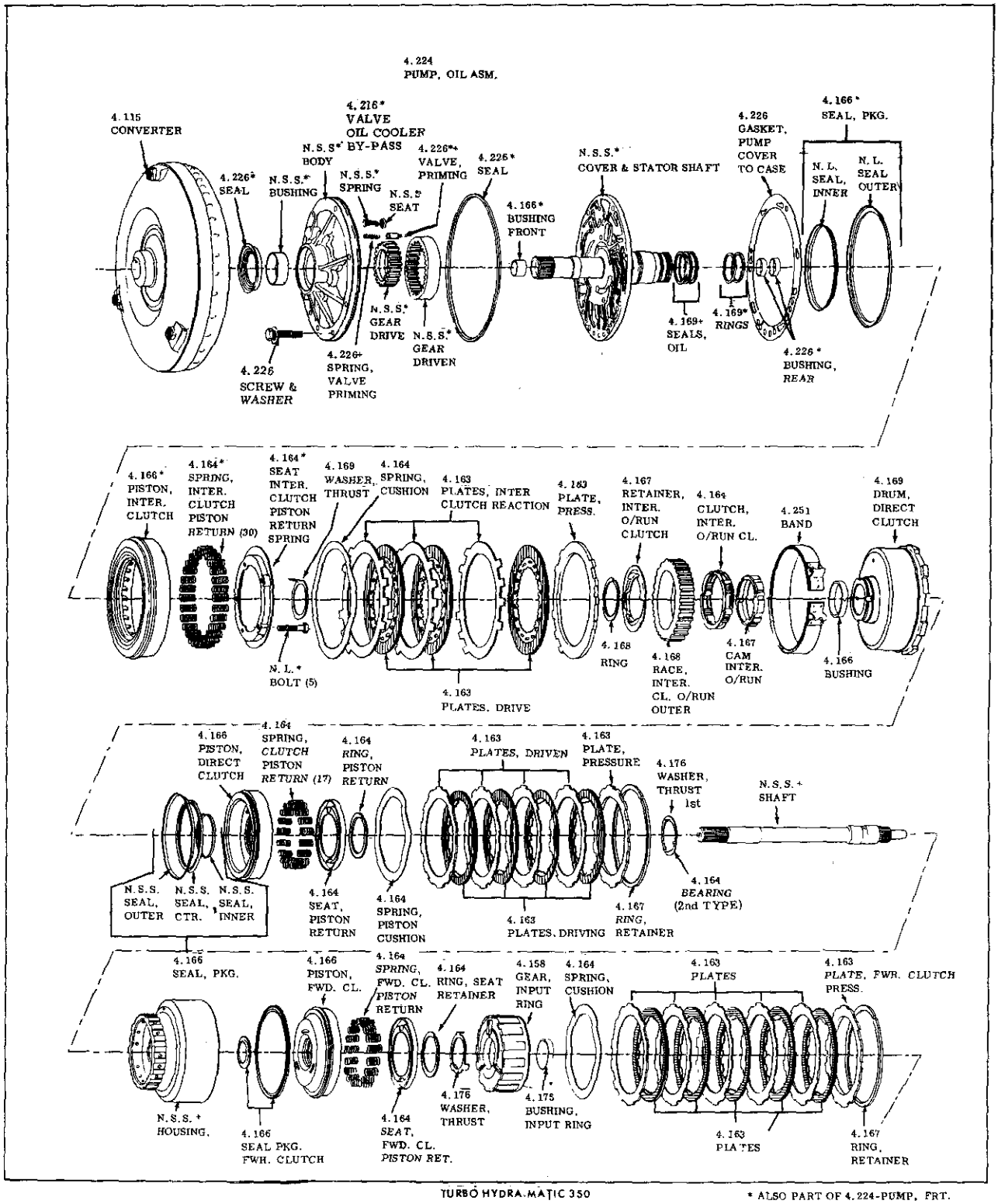

TURBO HYDRA-MATIC 350
AUTOMATIC TRANSMISSION
1969-1972
TURBO HYDRA-MATIC 375B
1972

* ALSO PART OF 4.224-PUMP, FRT.
\+ PART OF 4.169-HOUSING, FWR. CLUTCH (INCL. INPUT SHAFT)

+2nd TYPE 1970 PRODUCTION TRANS. DO NOT USE PRIMING VALVE AND SPRING.
NOTE: SERVICE REPLACEMENT "BODY" REQUIRES A PRIMING VALVE AND SPRING (GROUP 4.226)

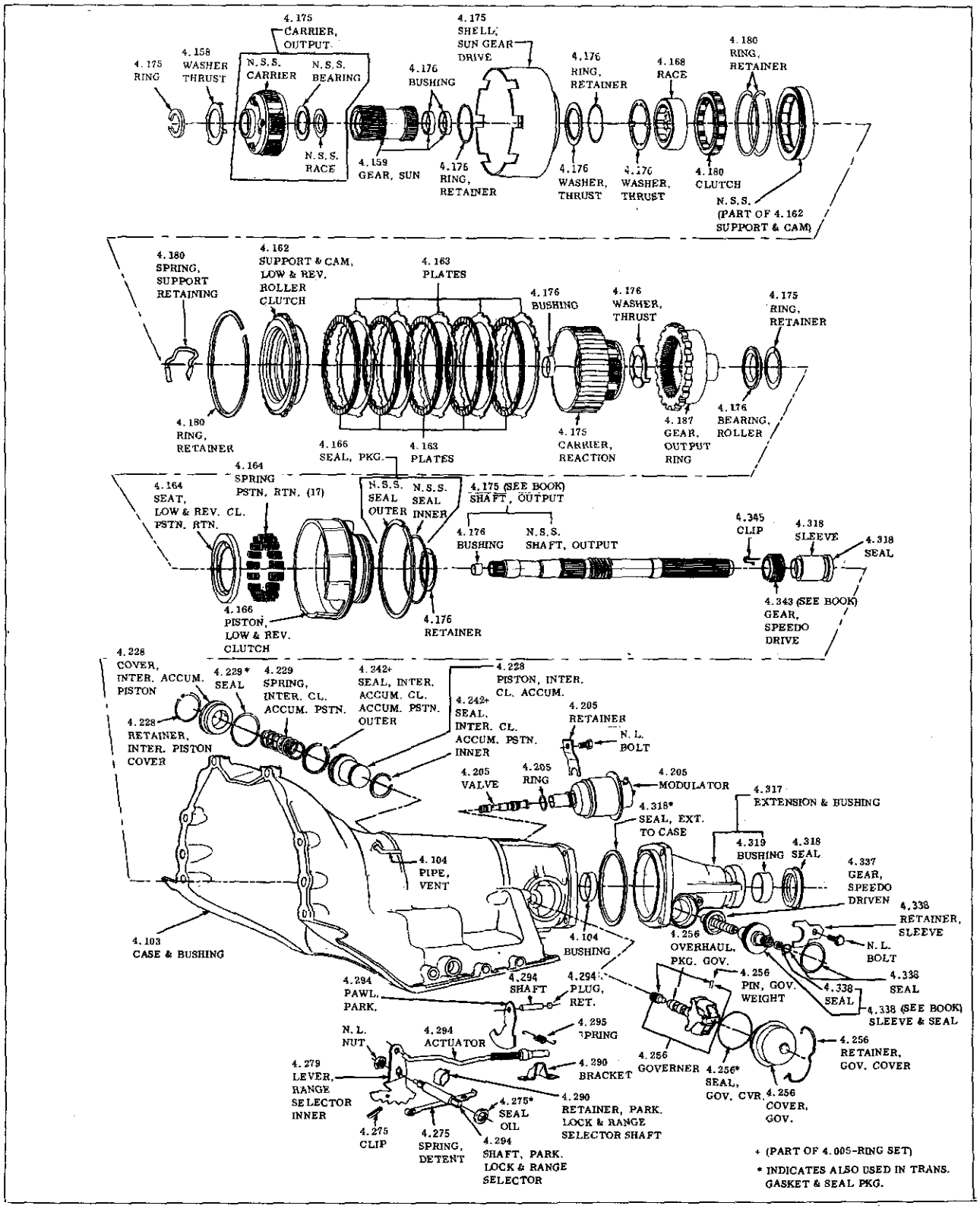

TURBO HYDRA-MATIC 350
AUTOMATIC TRANSMISSION
1969-1972
TURBO HYDRA-MATIC 375B
1972

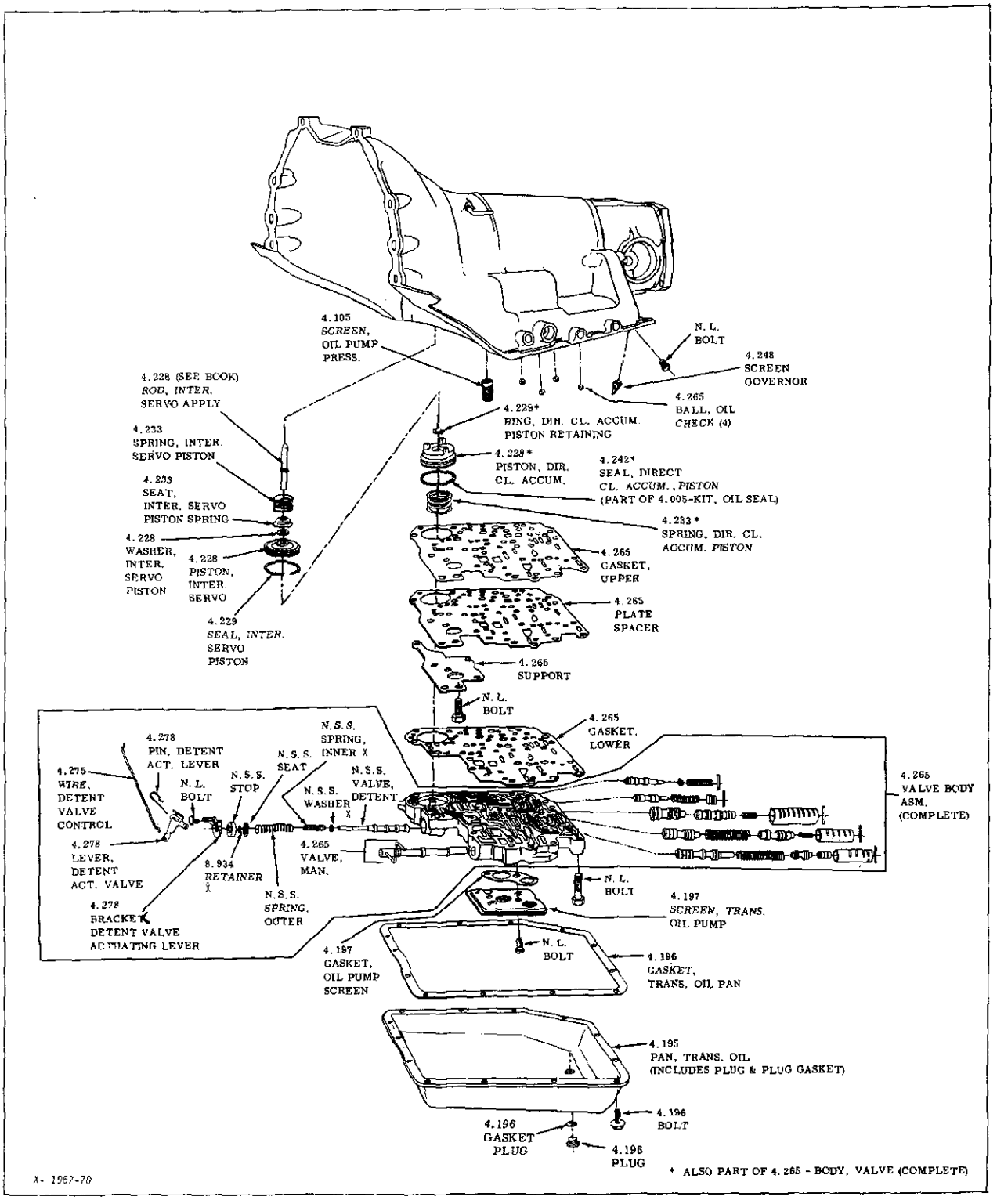

TURBO HYDRA-MATIC 350
AUTOMATIC TRANSMISSION
1969-1972
TURBO HYDRA-MATIC 375 B
1972

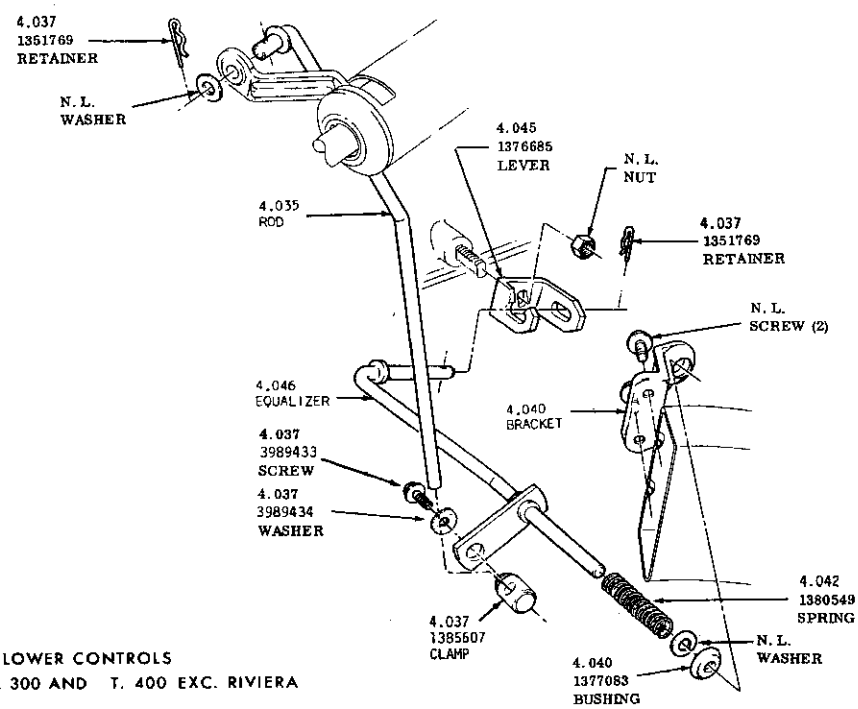

TRANSMISSION LOWER CONTROLS
1967-1972 -ALL—T. 300 AND T. 400 EXC. RIVIERA

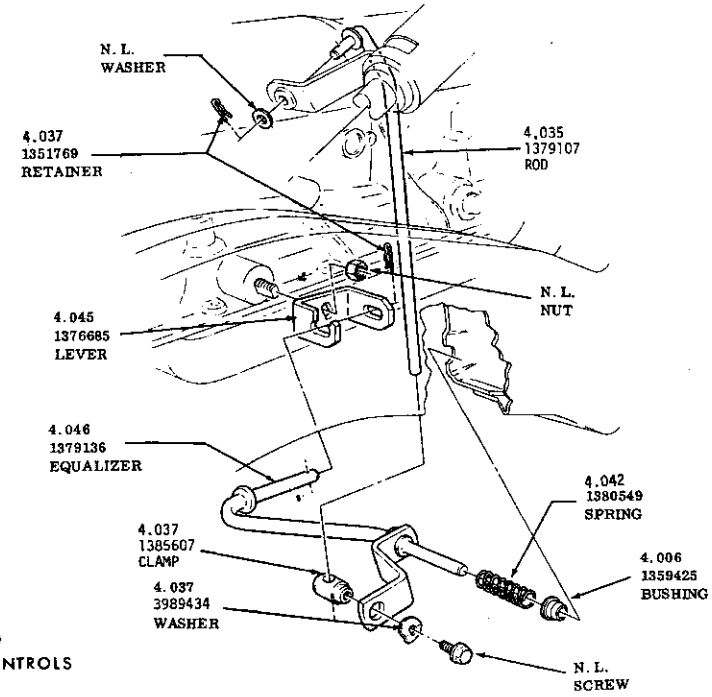

SUPER TURBINE 300
TRANSMISSION LOWER CONTROLS
RIVIERA—T. 400
1967-1972

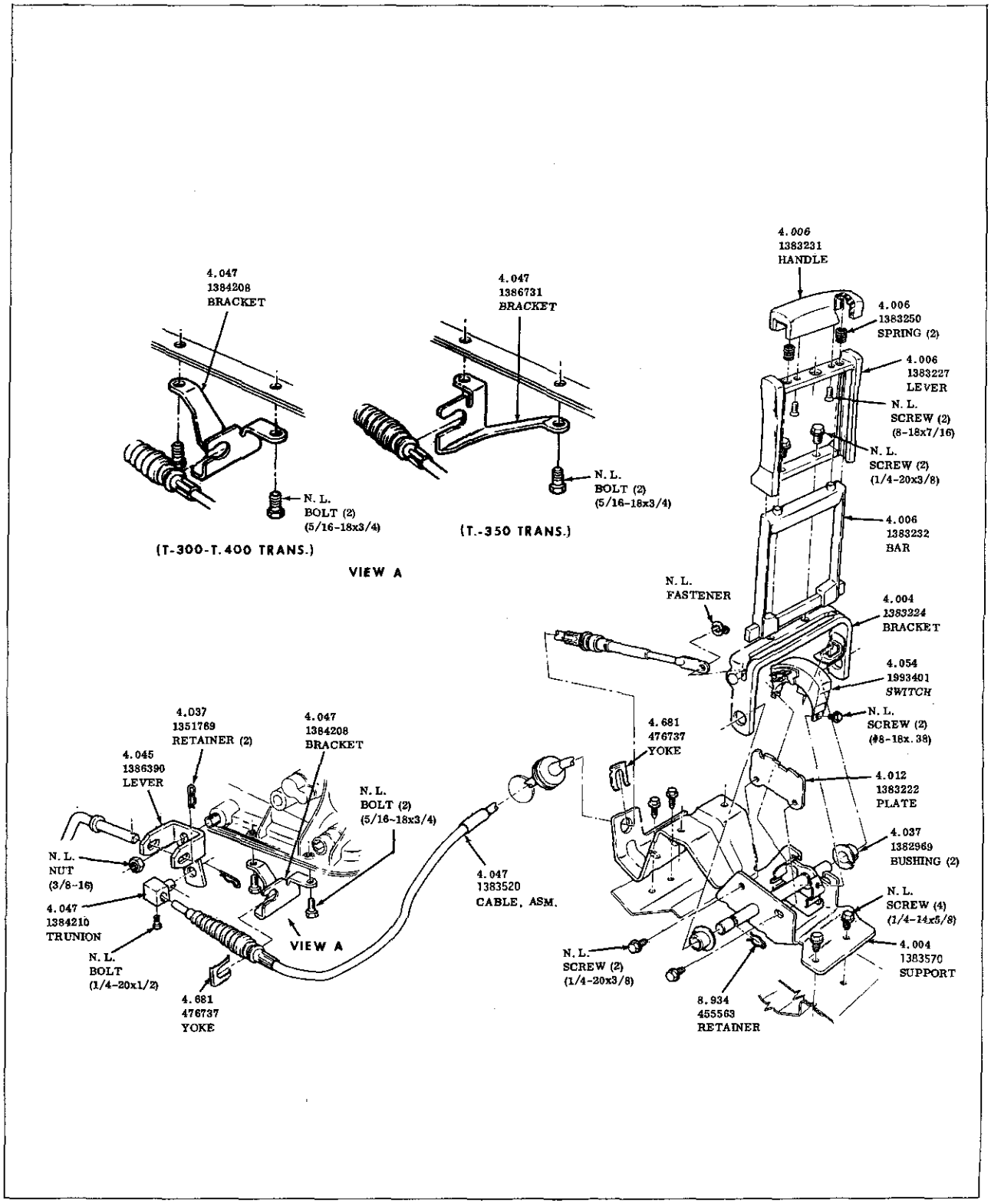

SUPER TURBINE 300
AUTOMATIC TRANSMISSION CONTROL
(CONSOLE) 1969-30-4000 & 6000

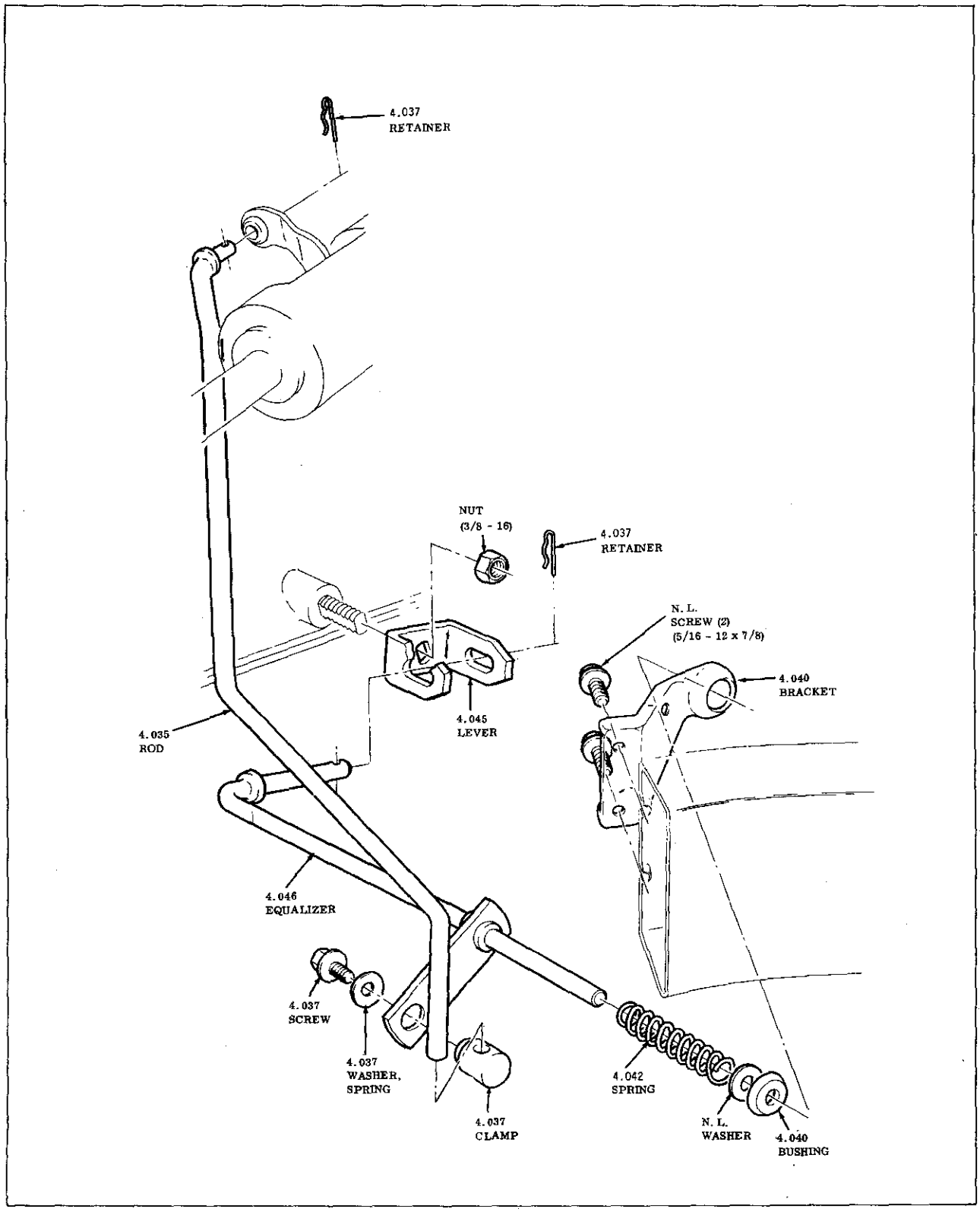

TRANSMISSION LOWER CONTROL (AUTO)
1969-1972 -30-4000 (350 CU. IN. ENG.)

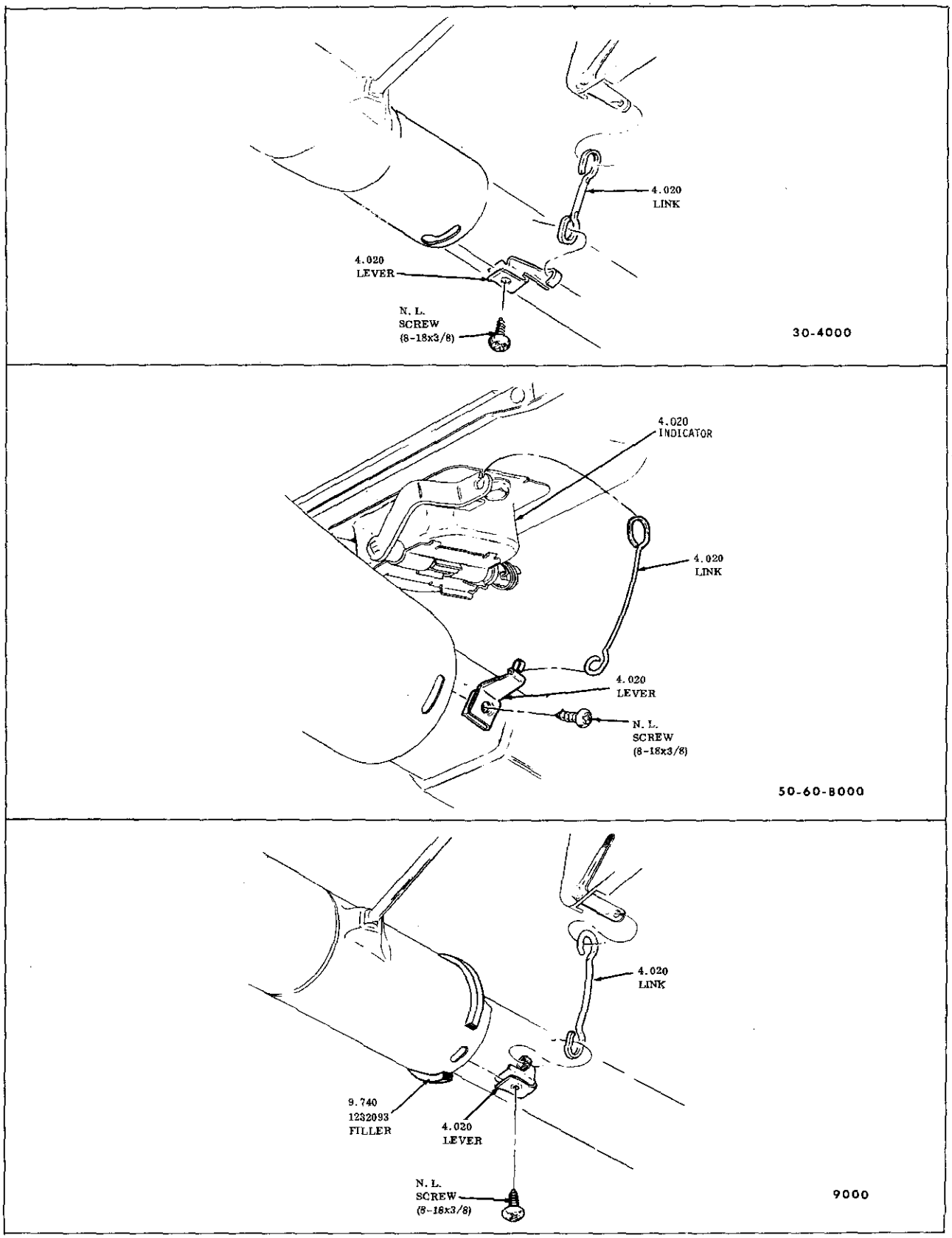

TRANSMISSION SHIFT INDICATOR
1969-ALL

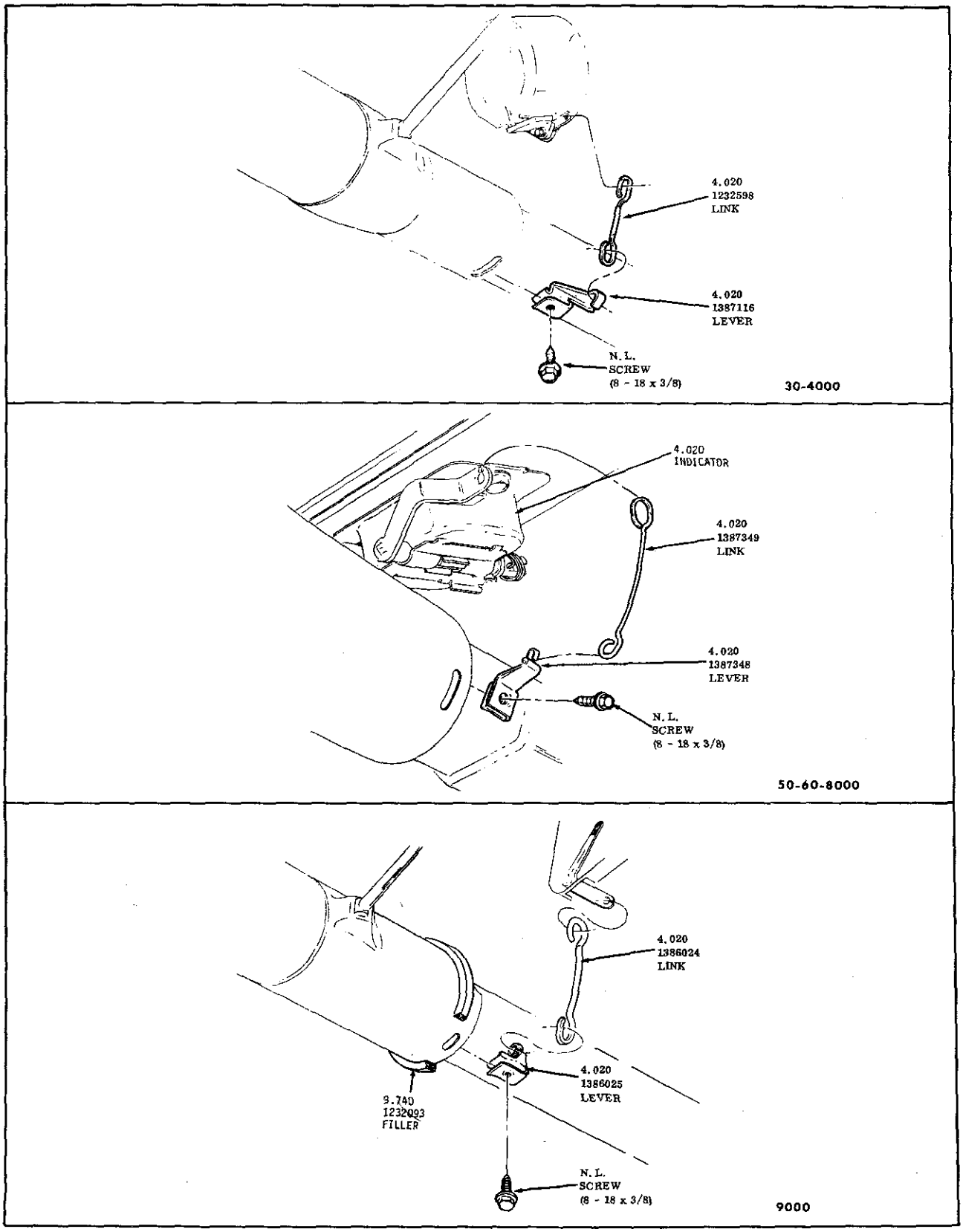

TRANSMISSION SHIFT INDICATOR
1970-ALL

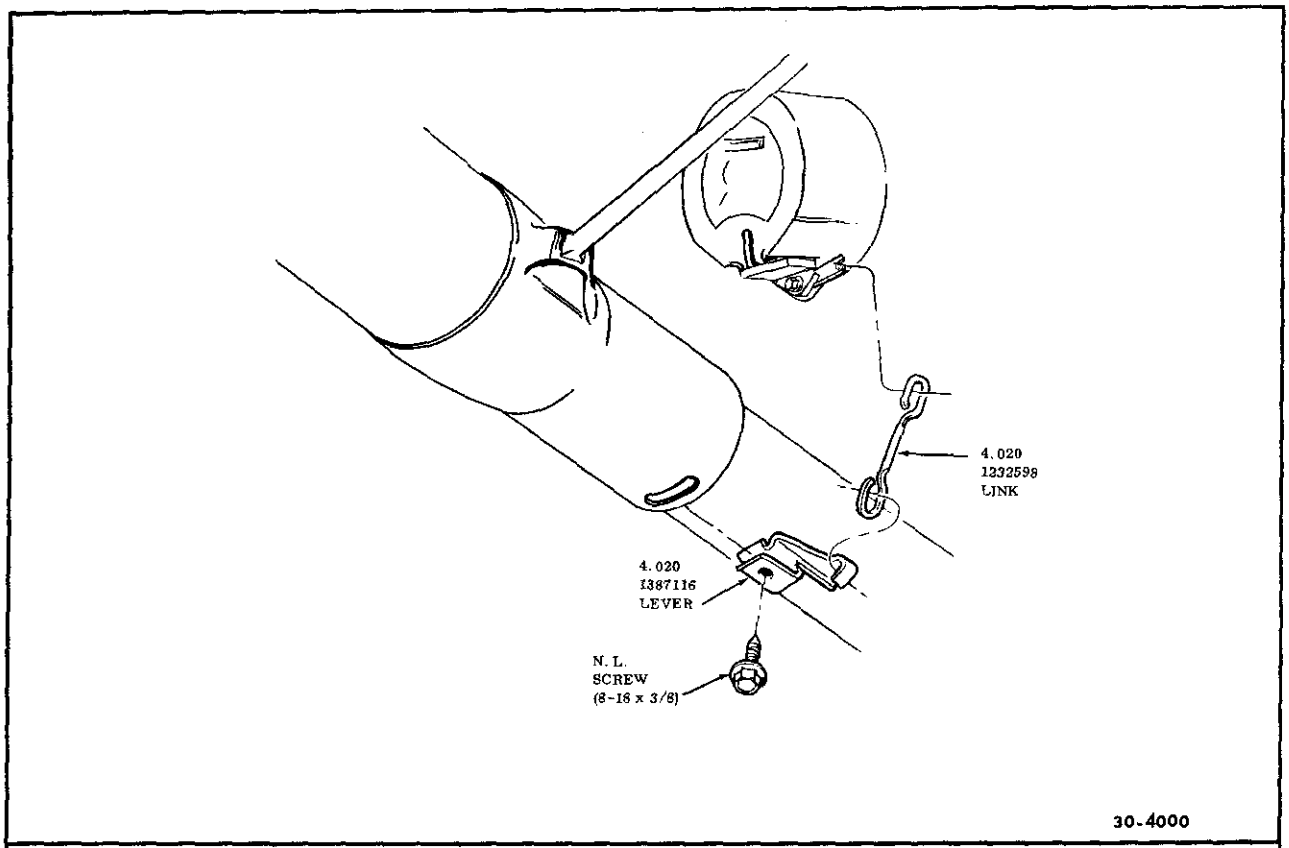

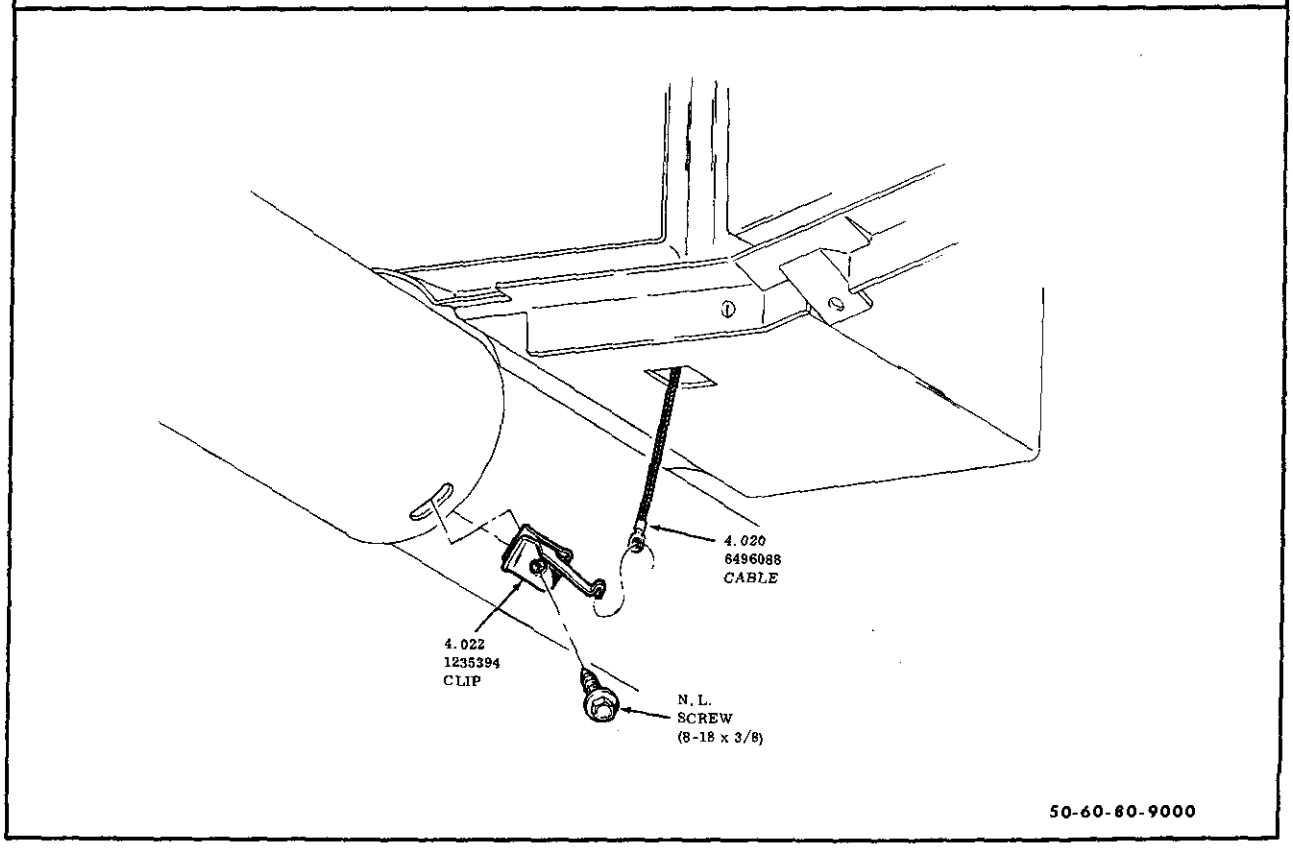

SHIFT INDICATOR
1971-1972 ALL

MEMORANDA

TURBO-HYDRAMATIC

400

AUTOMATIC

TRANSMISSION

MEMORANDA

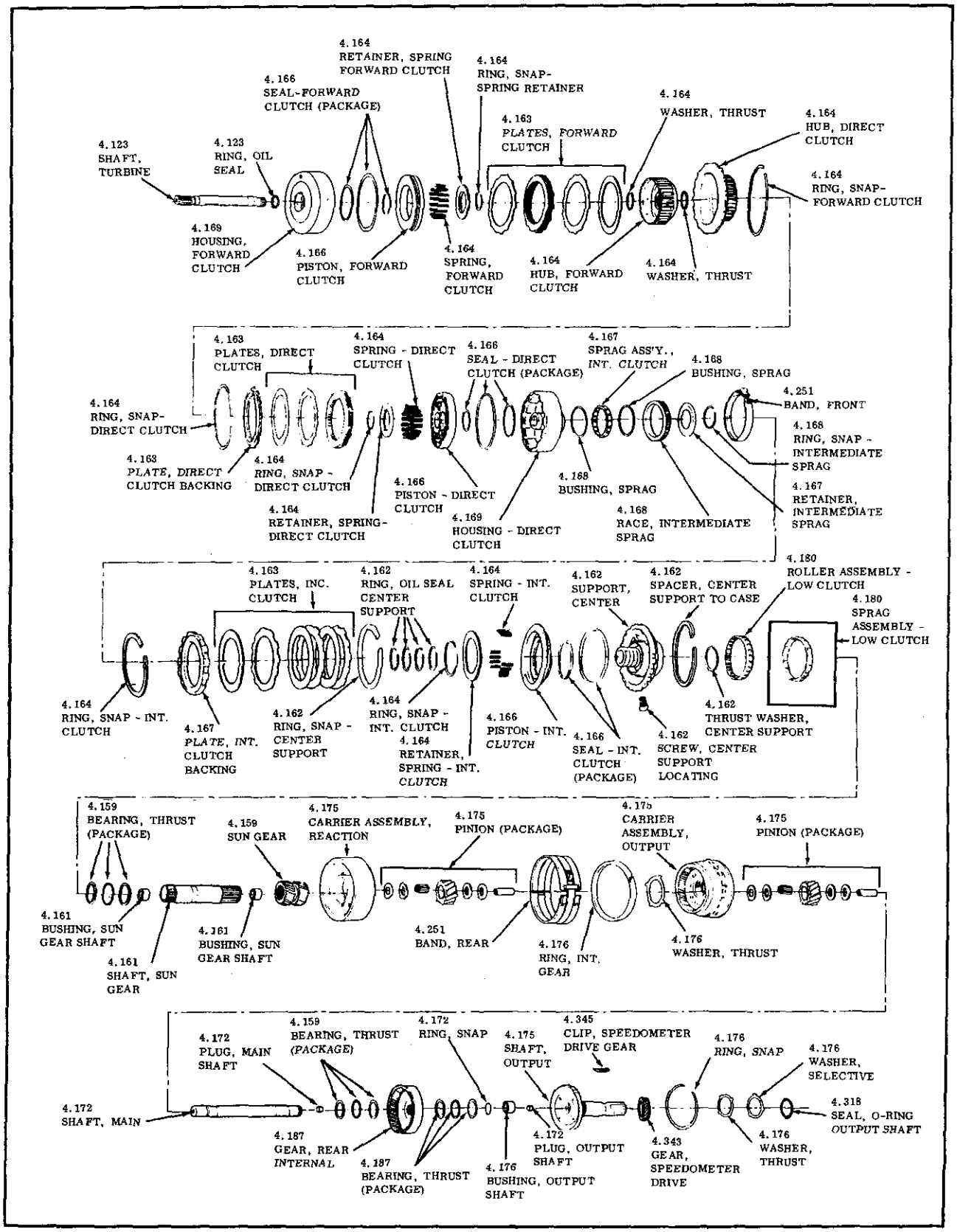

FORWARD, DIRECT, AND INTERMEDIATE CLUTCH
TURBO-HYDRA-MATIC 400
AUTOMATIC TRANSMISSION
1964 - 1972

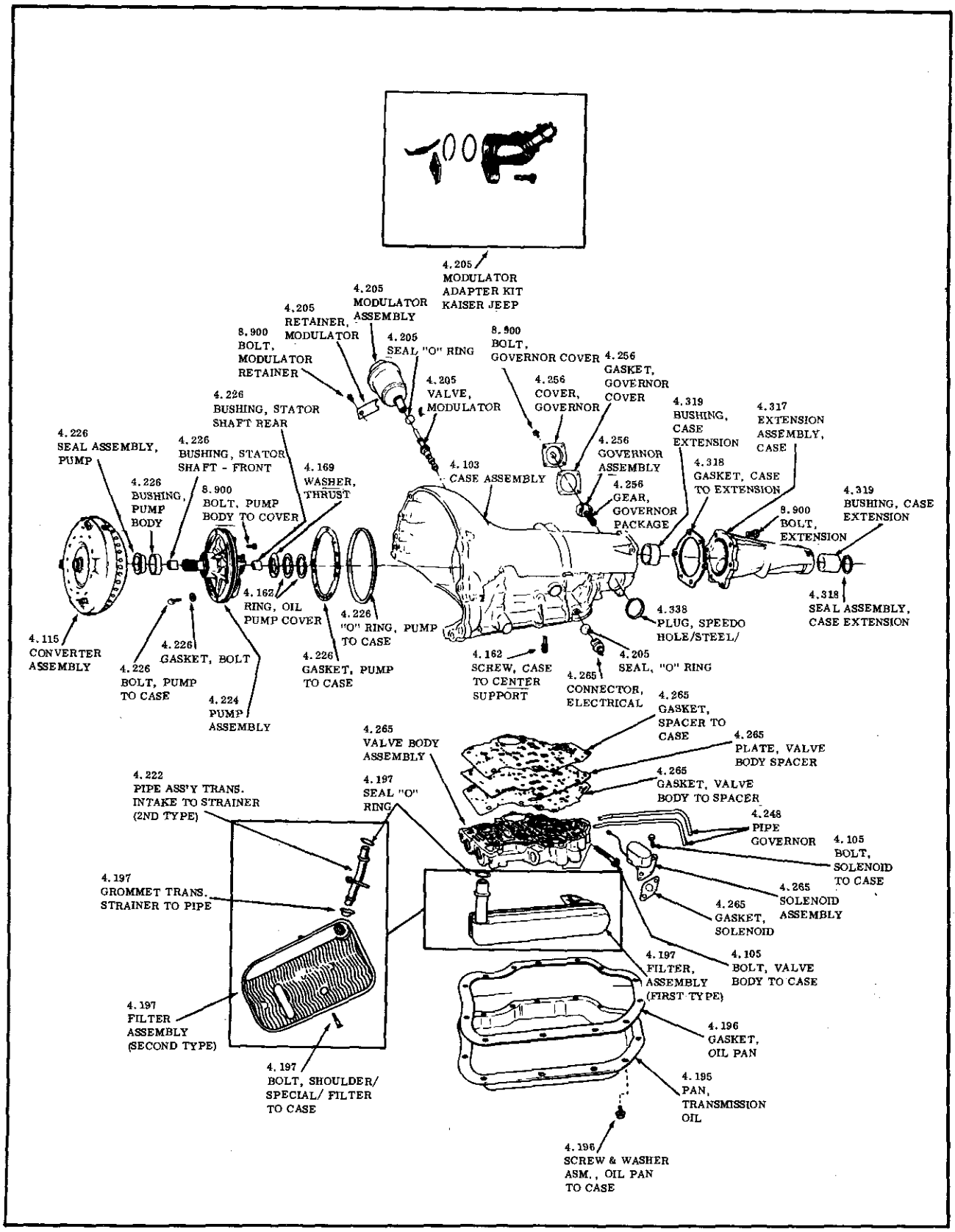

CASE AND VALVE BODY
TURBO-HYDRA-MATIC 400
AUTOMATIC TRANSMISSION
1964 - 1972

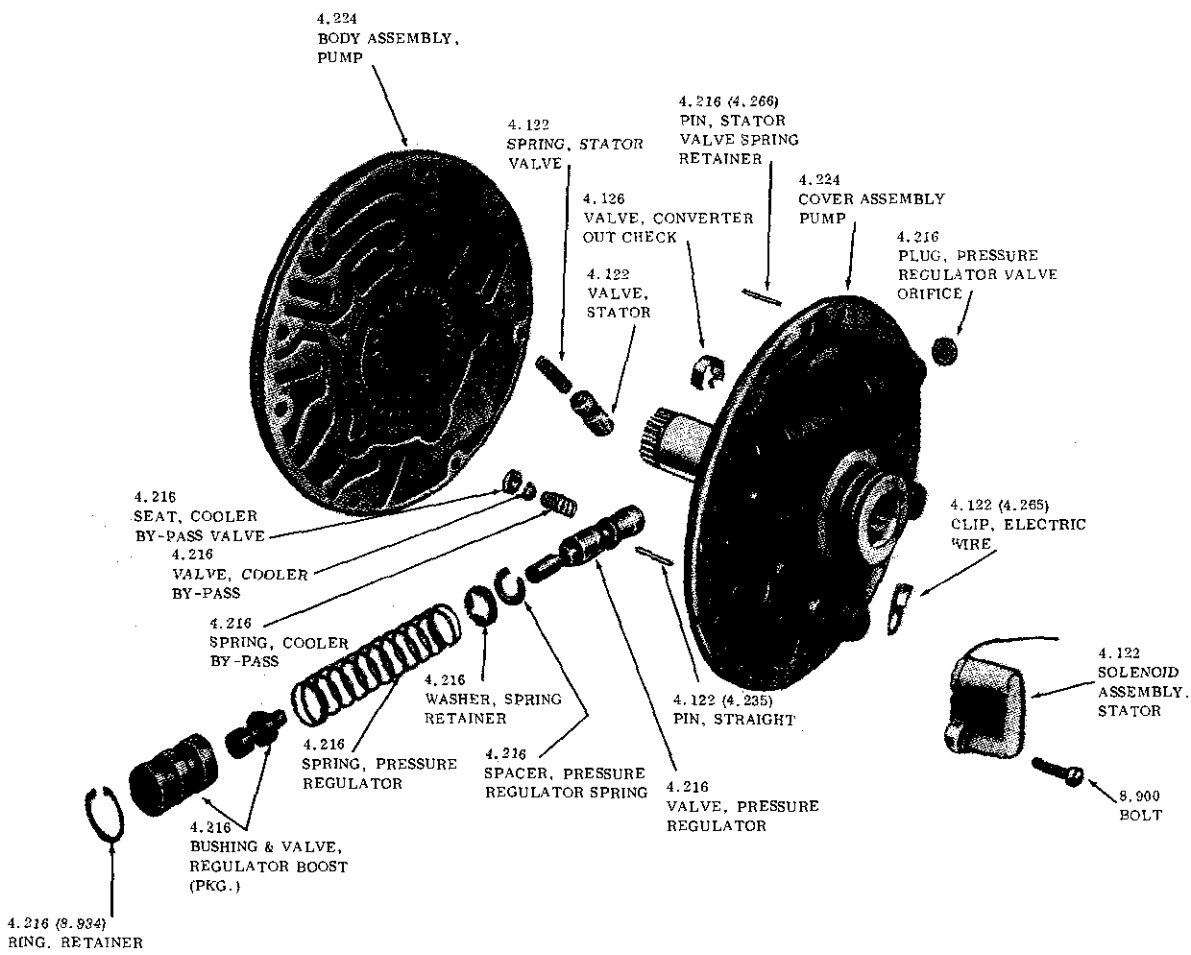

PUMP ASSEMBLY
TURBO-HYDRA-MATIC 400
AUTOMATIC TRANSMISSION
1964 - 1972

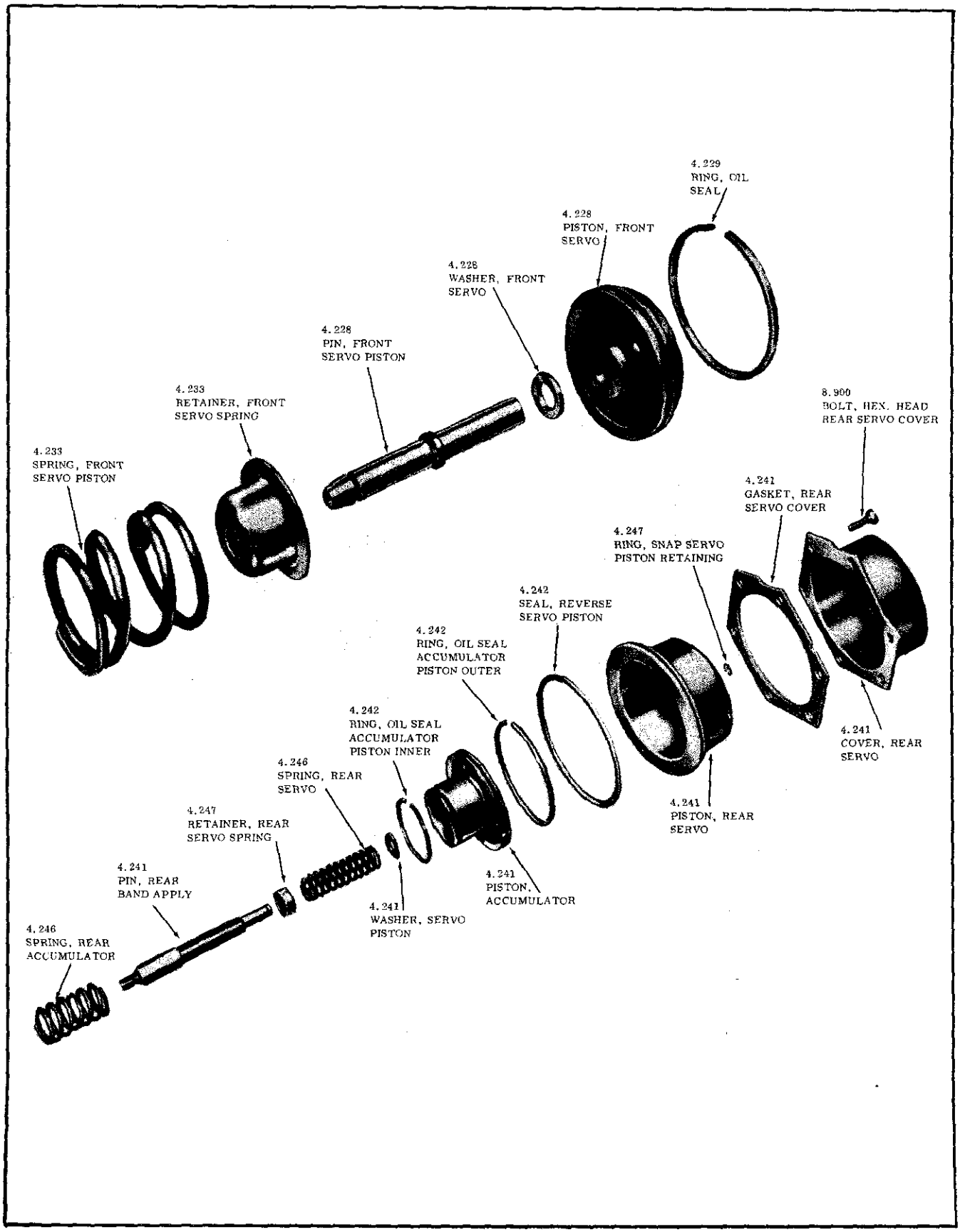

FRONT & REAR SERVO ACCUMULATOR
TURBO-HYDRA-MATIC 400
AUTOMATIC TRANSMISSION
1964 - 1972

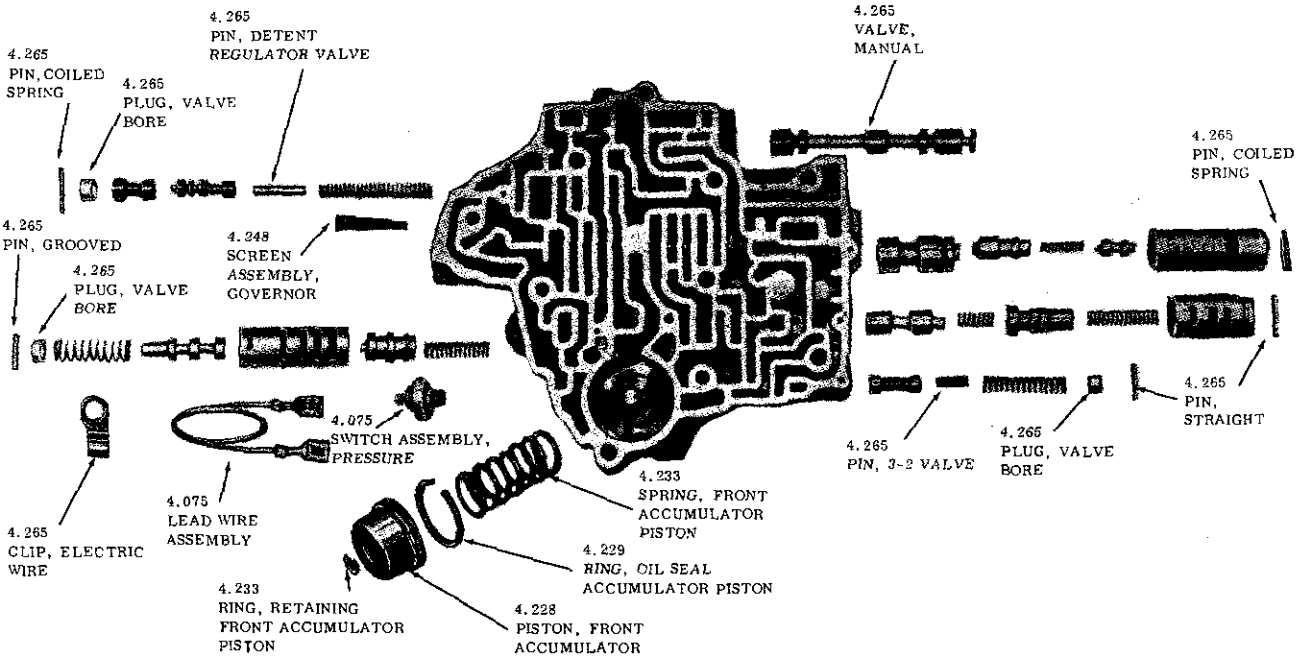

VALVE ASSEMBLY
TURBO-HYDRA-MATIC 400
AUTOMATIC TRANSMISSION
1964 - 1972

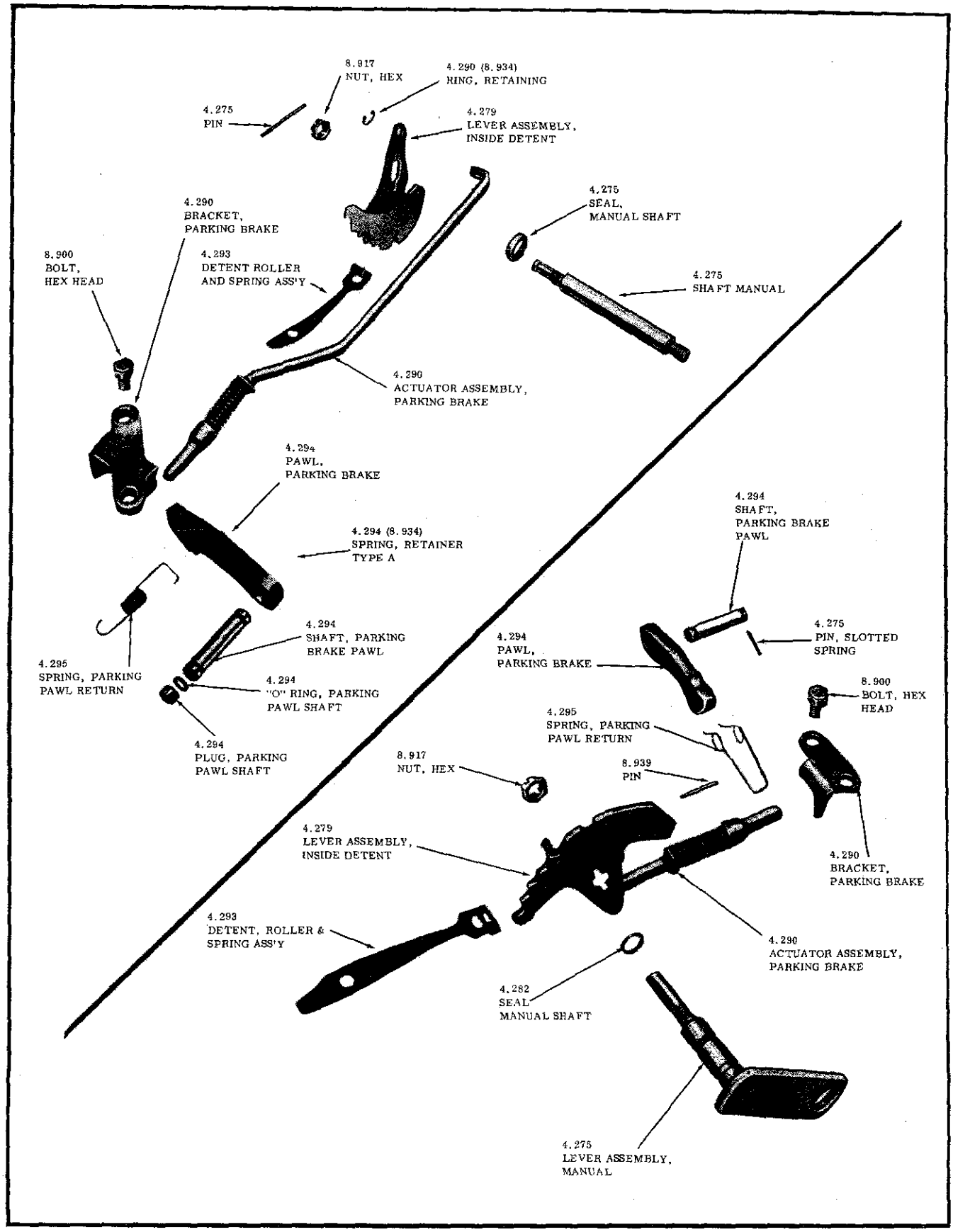

PARKING BRAKE & INSIDE DETENT LEVER
TURBO-HYDRA-MATIC 400
AUTOMATIC TRANSMISSION

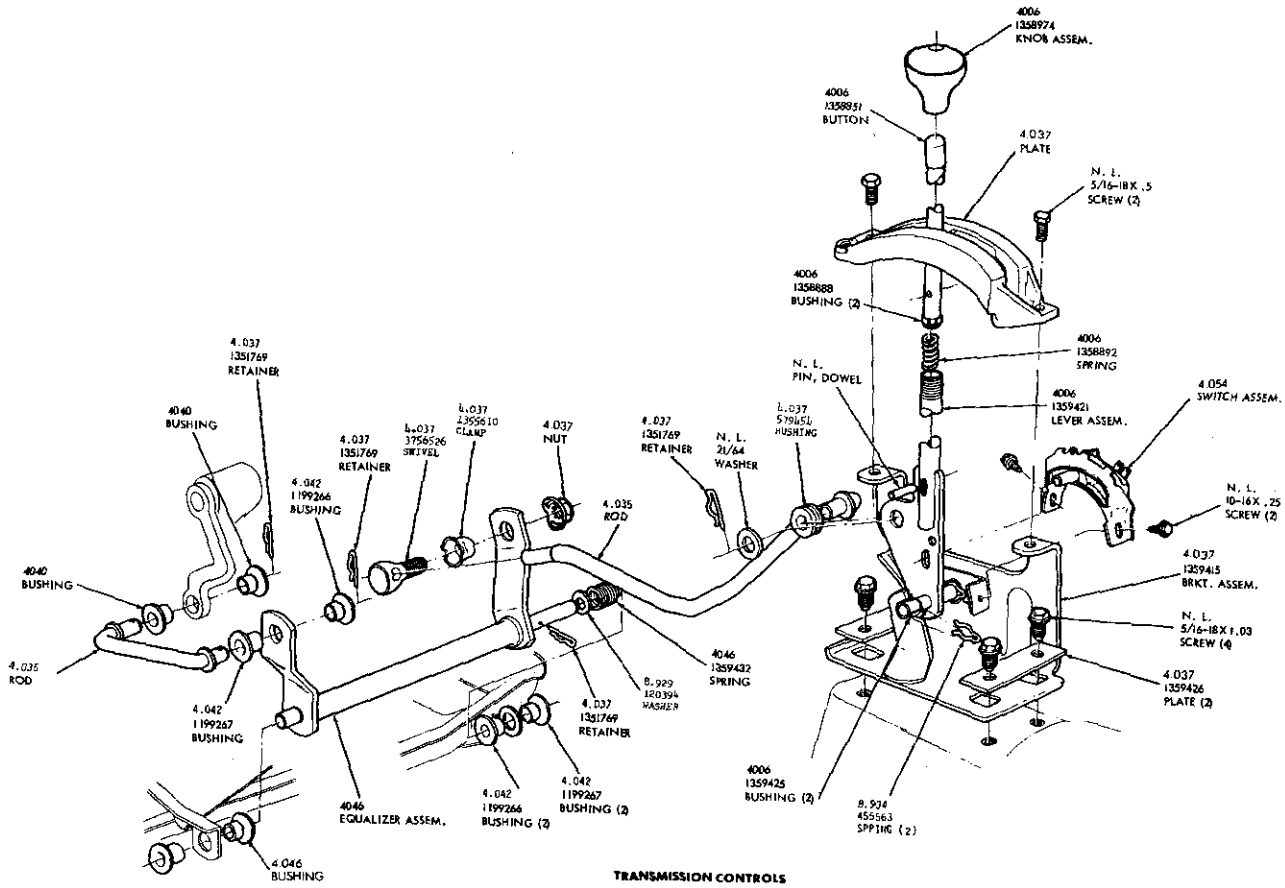

TRANSMISSION CONTROLS
1963—1964-4747

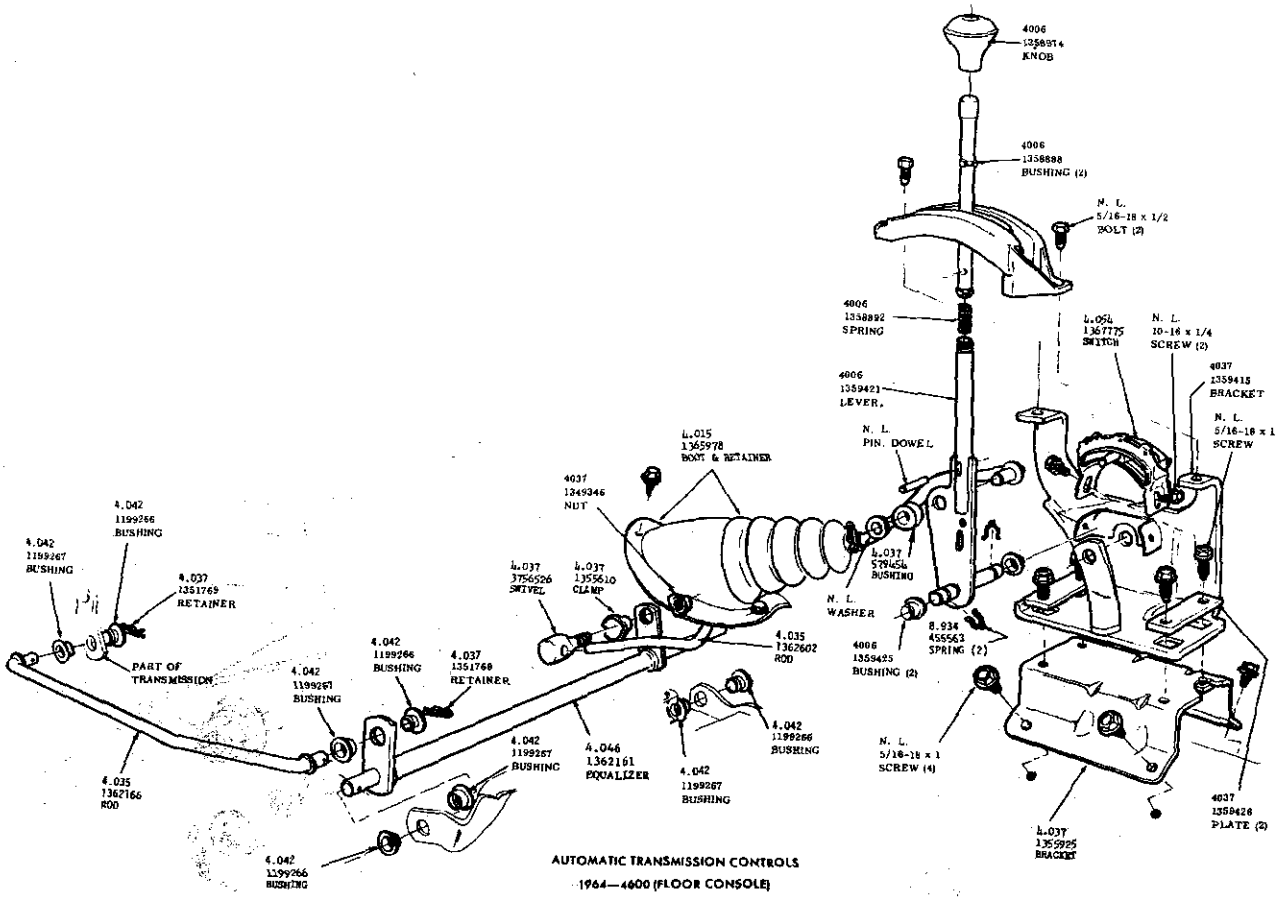

AUTOMATIC TRANSMISSION CONTROLS
1964—4600 (FLOOR CONSOLE)

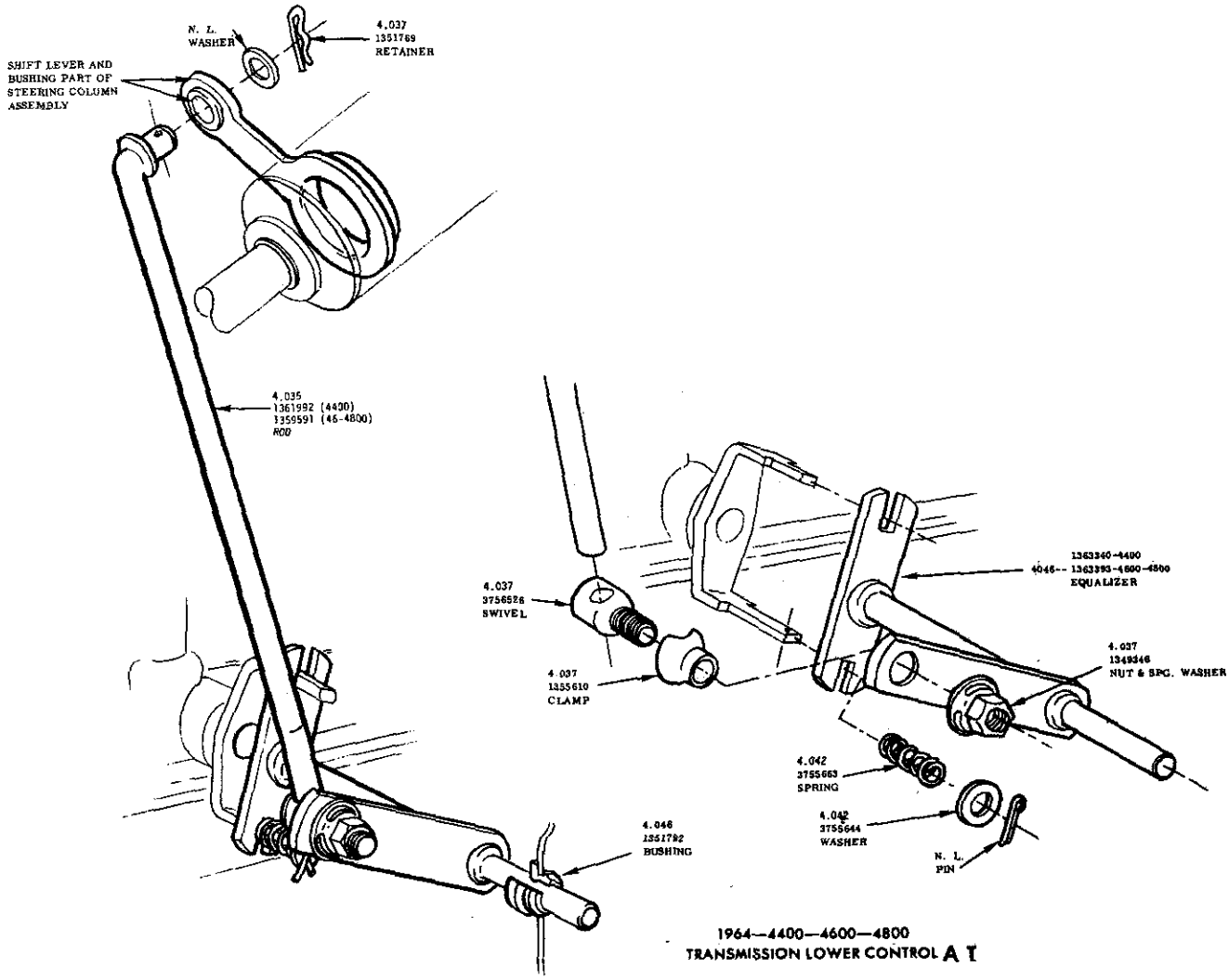

1964—4400—4600—4800
TRANSMISSION LOWER CONTROL A T

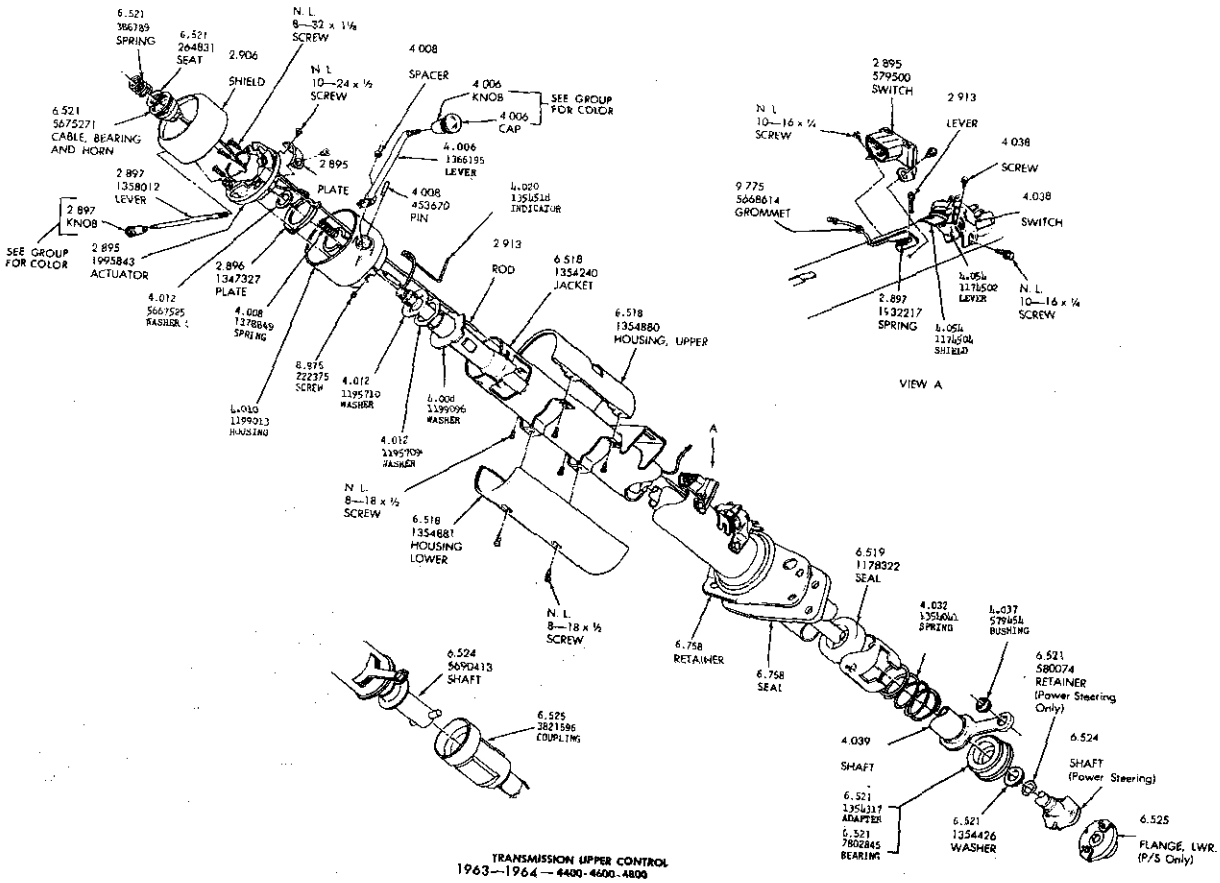

TRANSMISSION UPPER CONTROL
1963—1964 — 4400-4600-4800

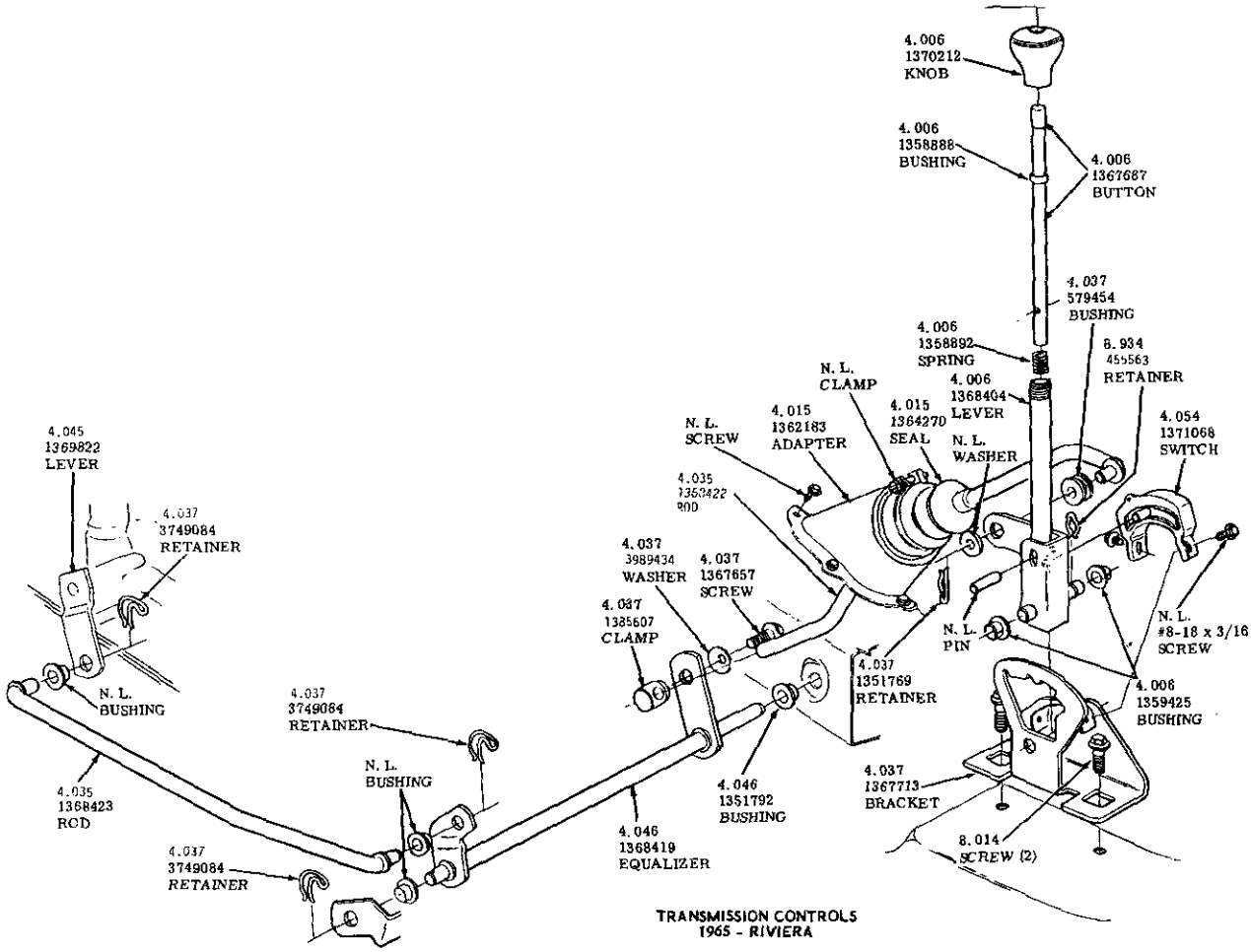

TRANSMISSION CONTROLS
1965 - RIVIERA

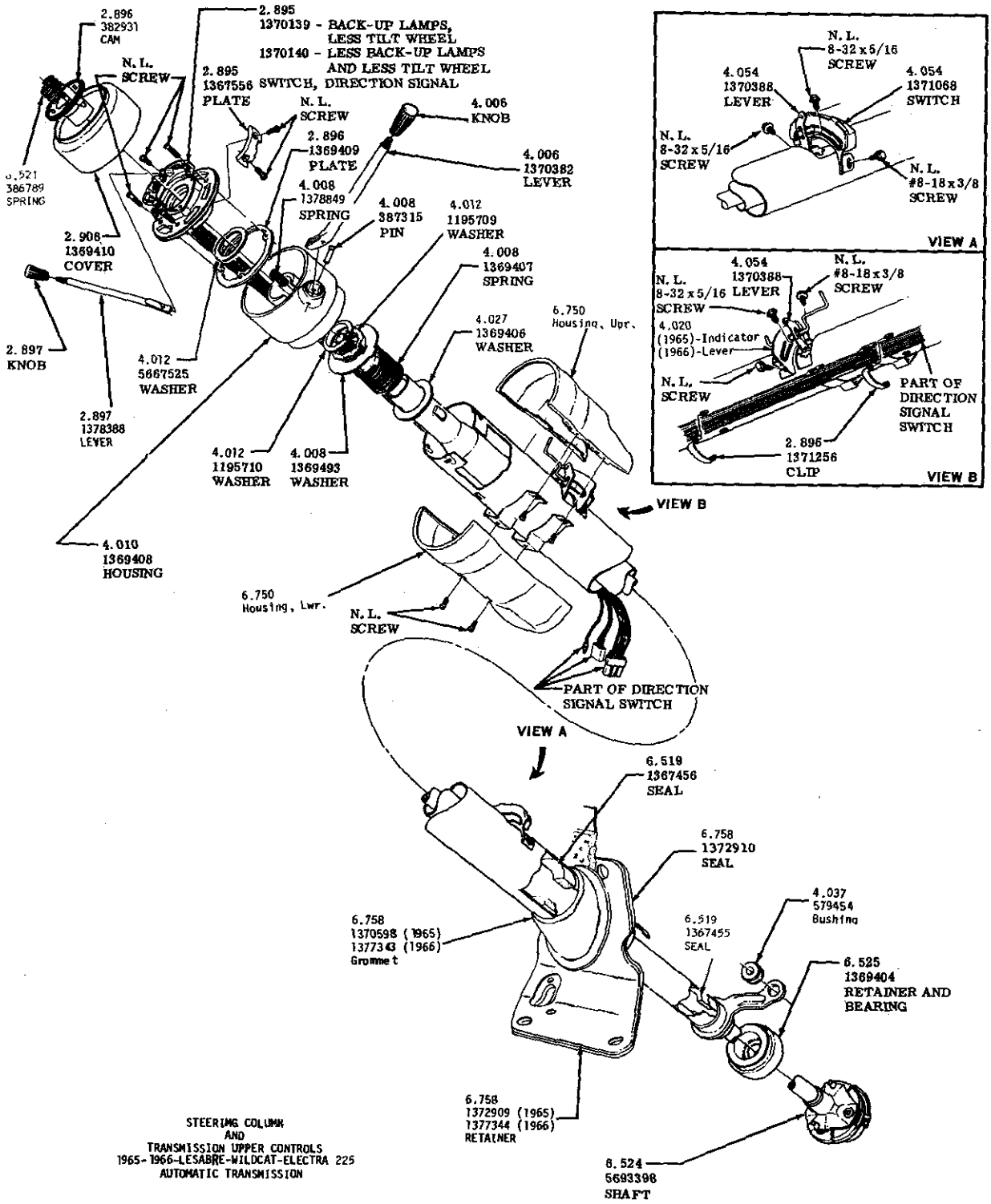

STEERING COLUMN
AND
TRANSMISSION UPPER CONTROLS
1965-1966-LESABRE-WILDCAT-ELECTRA 225
AUTOMATIC TRANSMISSION

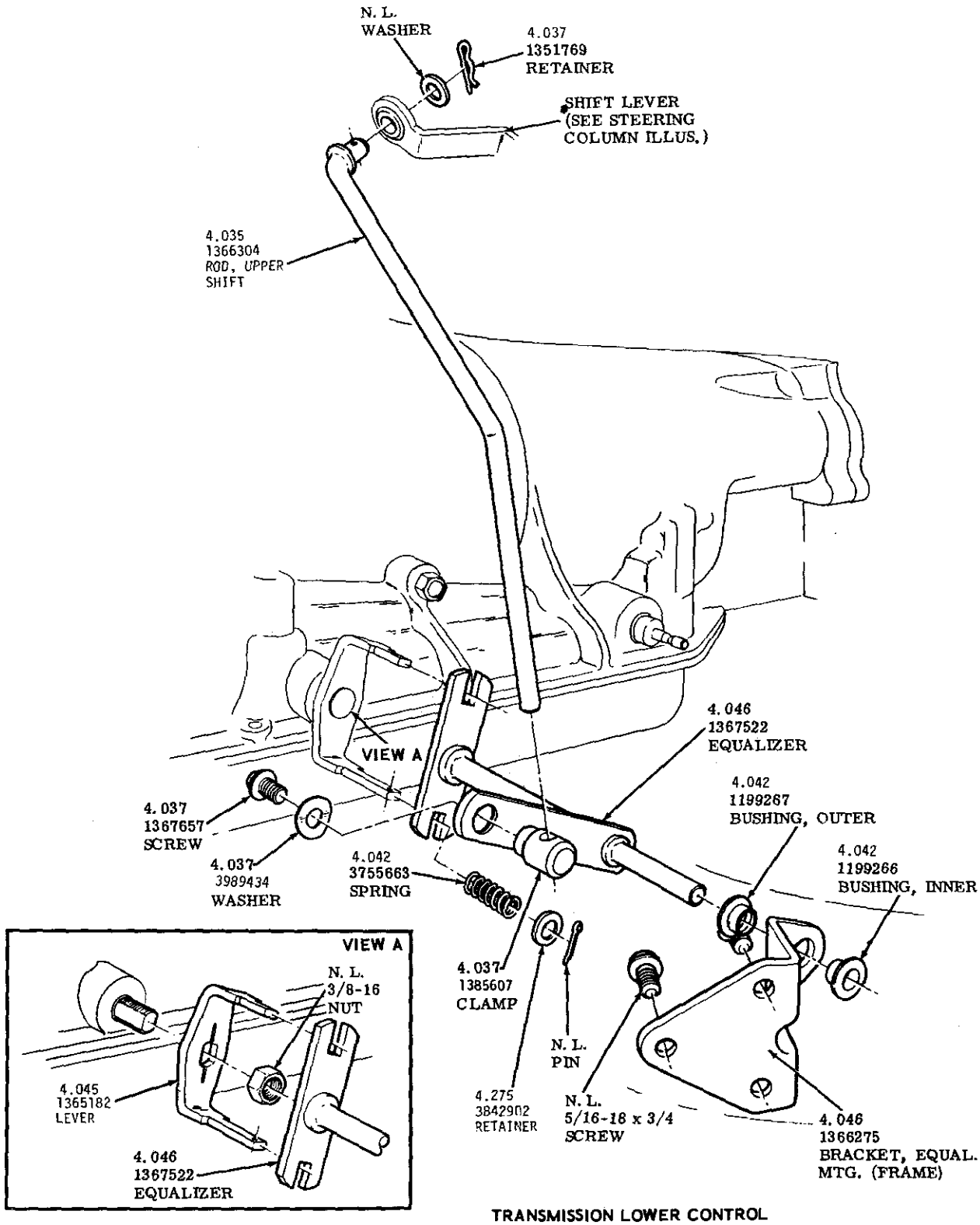

TRANSMISSION LOWER CONTROL
1965 - LESABRE, WILDCAT, ELECTRA 225
AUTOMATIC TRANSMISSION

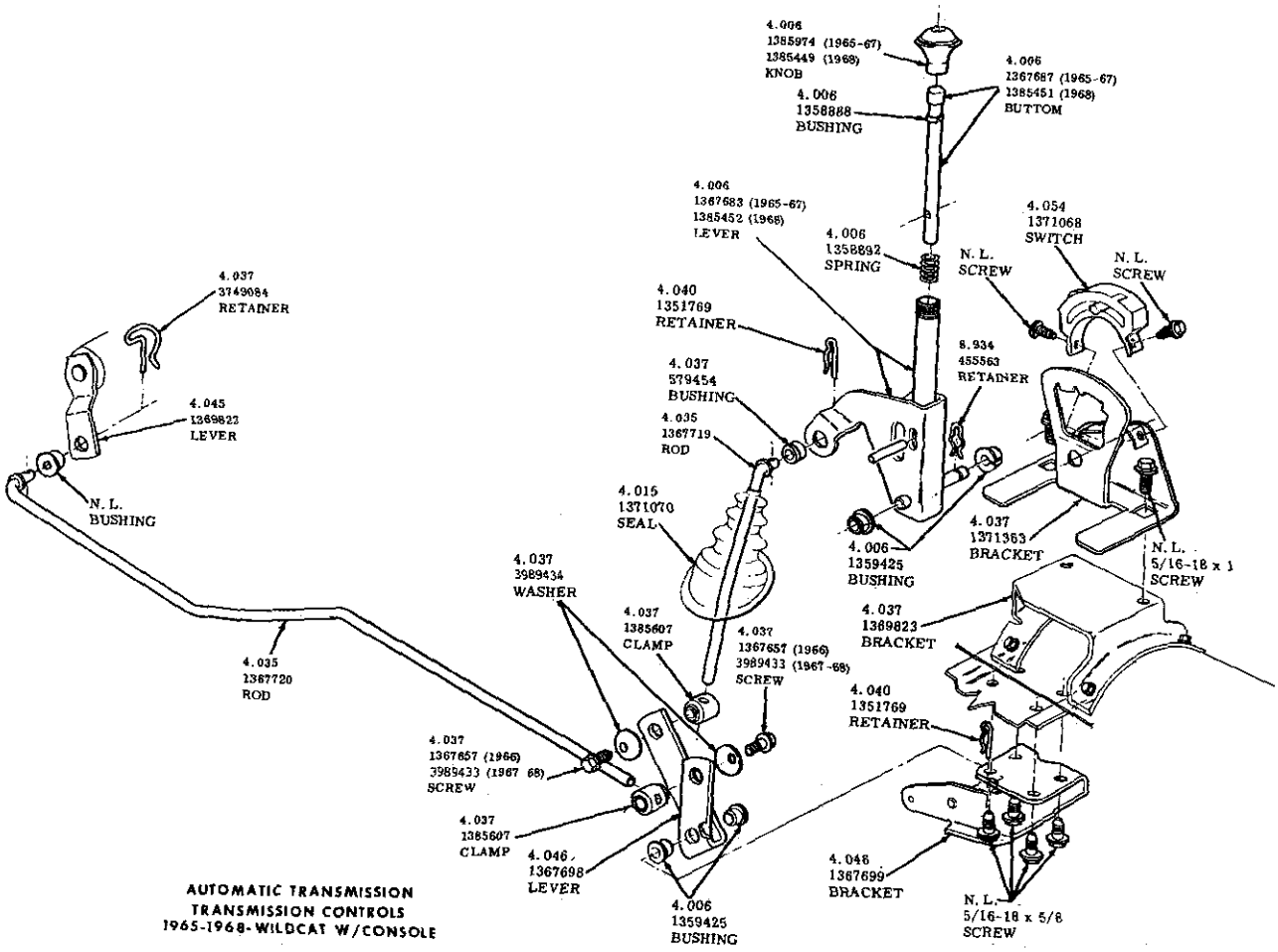

AUTOMATIC TRANSMISSION
TRANSMISSION CONTROLS
1965-1968-WILDCAT W/CONSOLE

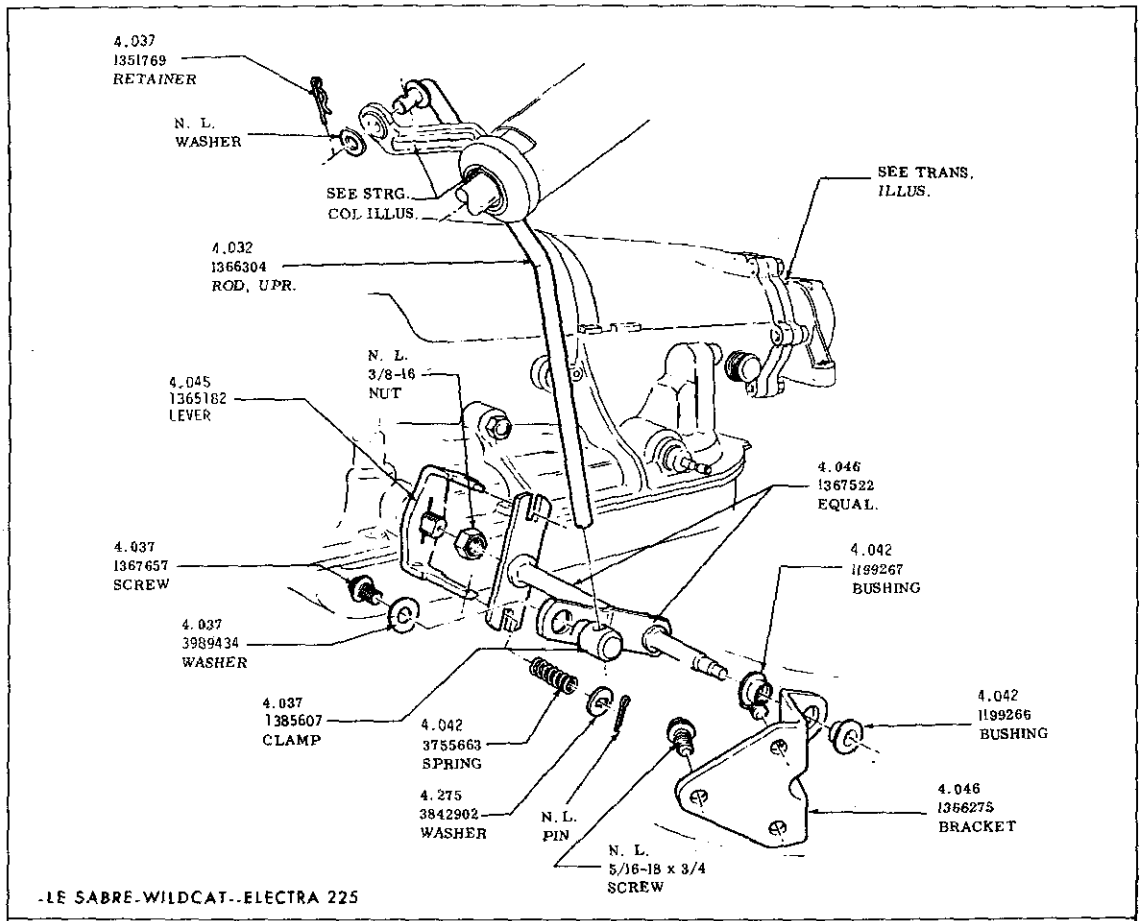

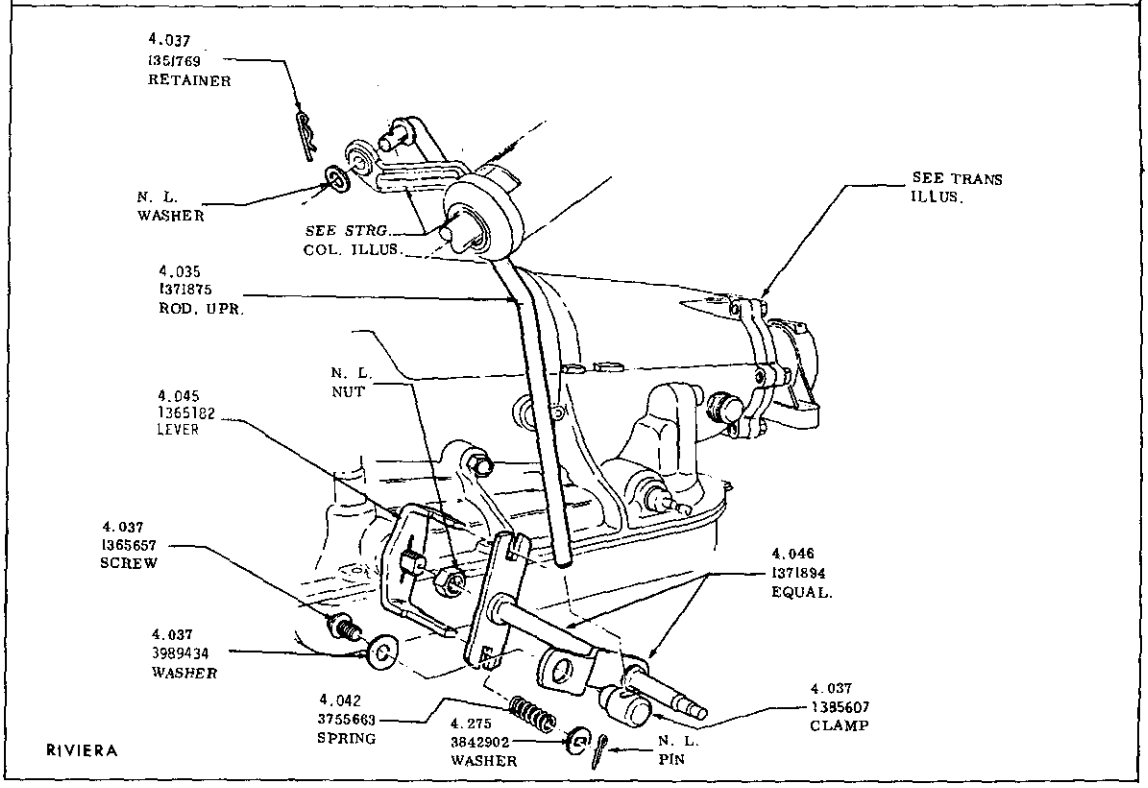

AUTOMATIC TRANSMISSION LOWER CONTROLS
1966 LE SABRE. WILDCAT ELECTRA 225 RIVIERA

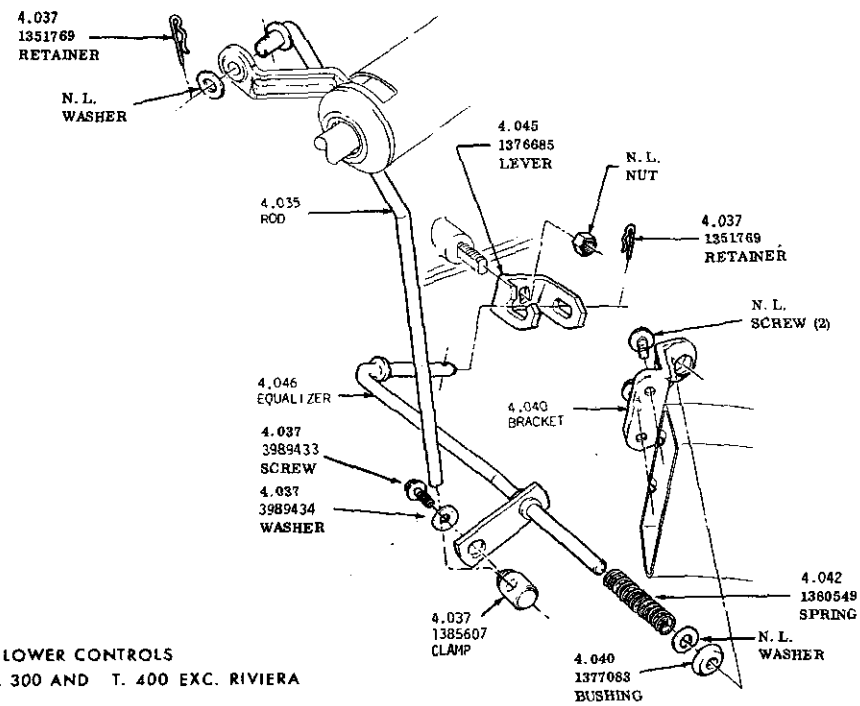

TRANSMISSION LOWER CONTROLS
1967-1972-ALL—T. 300 AND T. 400 EXC. RIVIERA

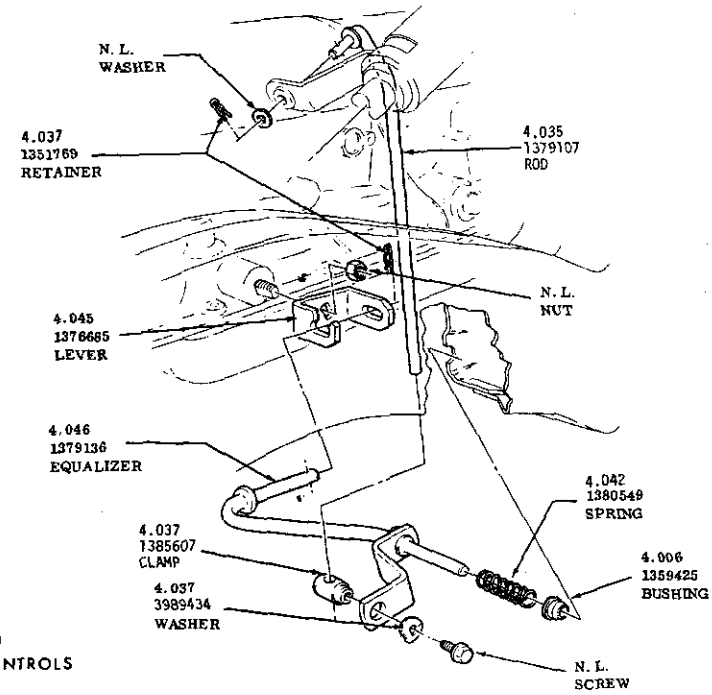

SUPER TURBINE 300
TRANSMISSION LOWER CONTROLS
RIVIERA—T. 400
1967-1972

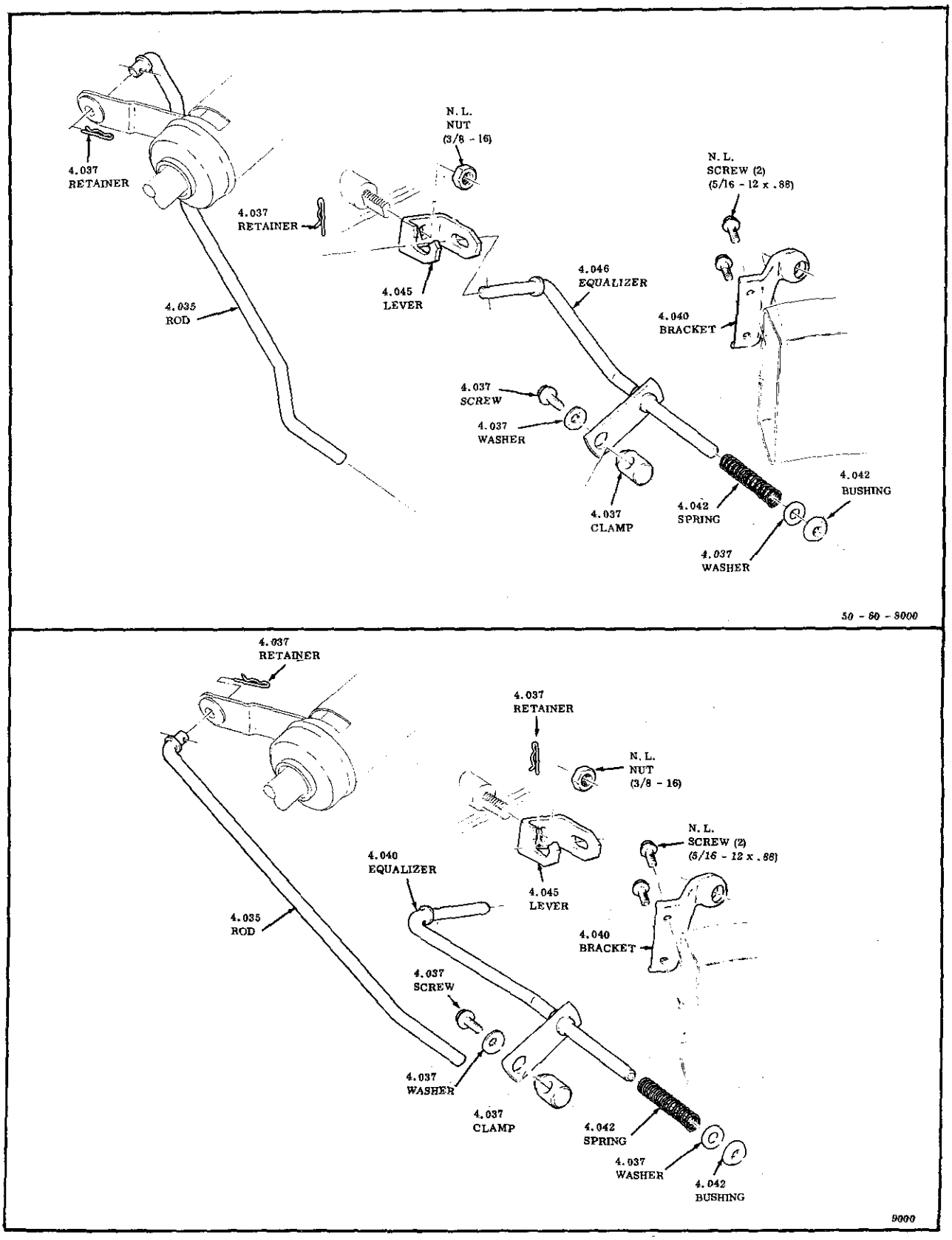

TRANSMISSION LOWER CONTROL
1971 - 1972 50–60–80–9000

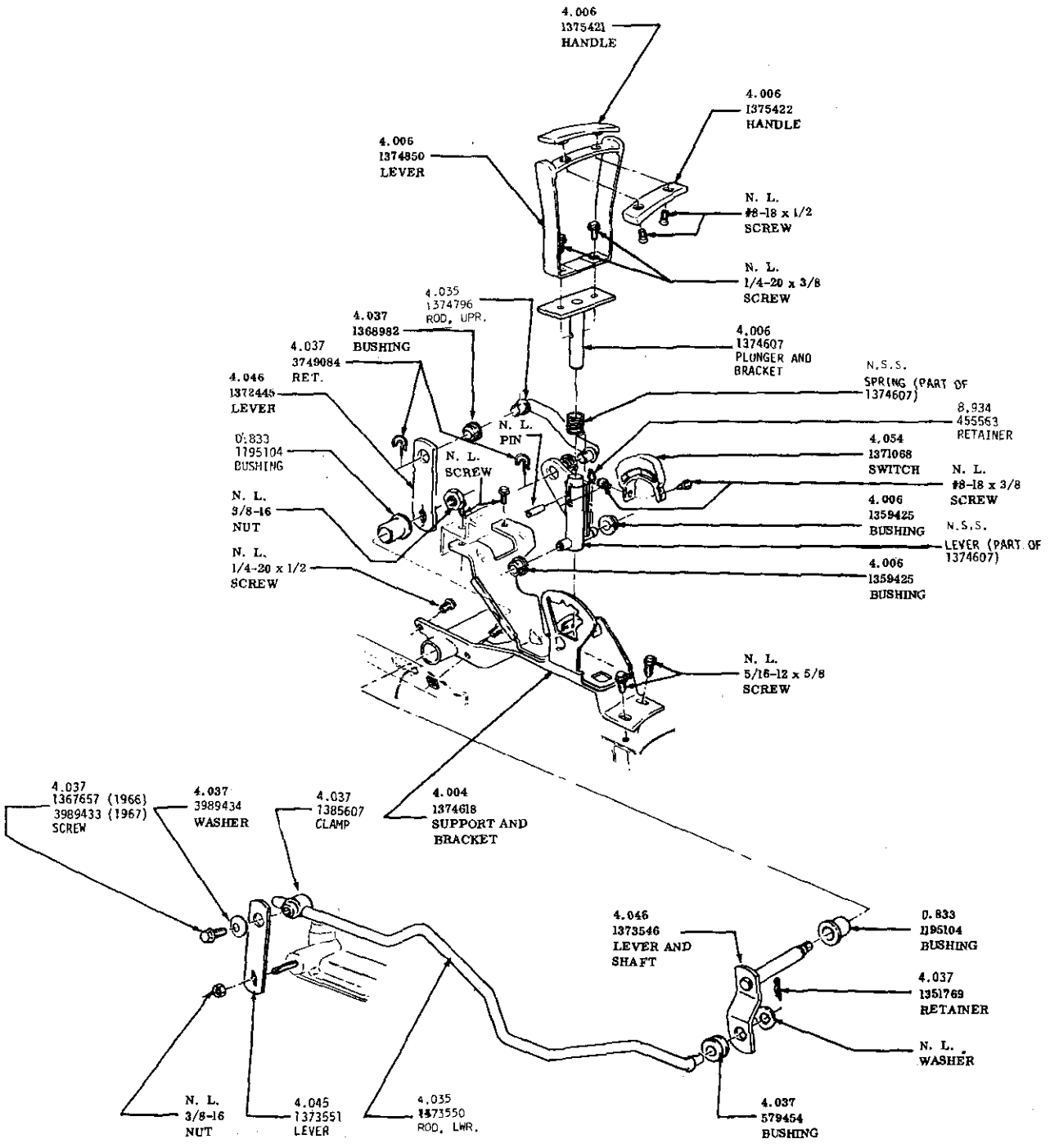

AUTOMATIC TRANSMISSION CONTROLS
1966-1968 RIVERA WITH CONSOLE

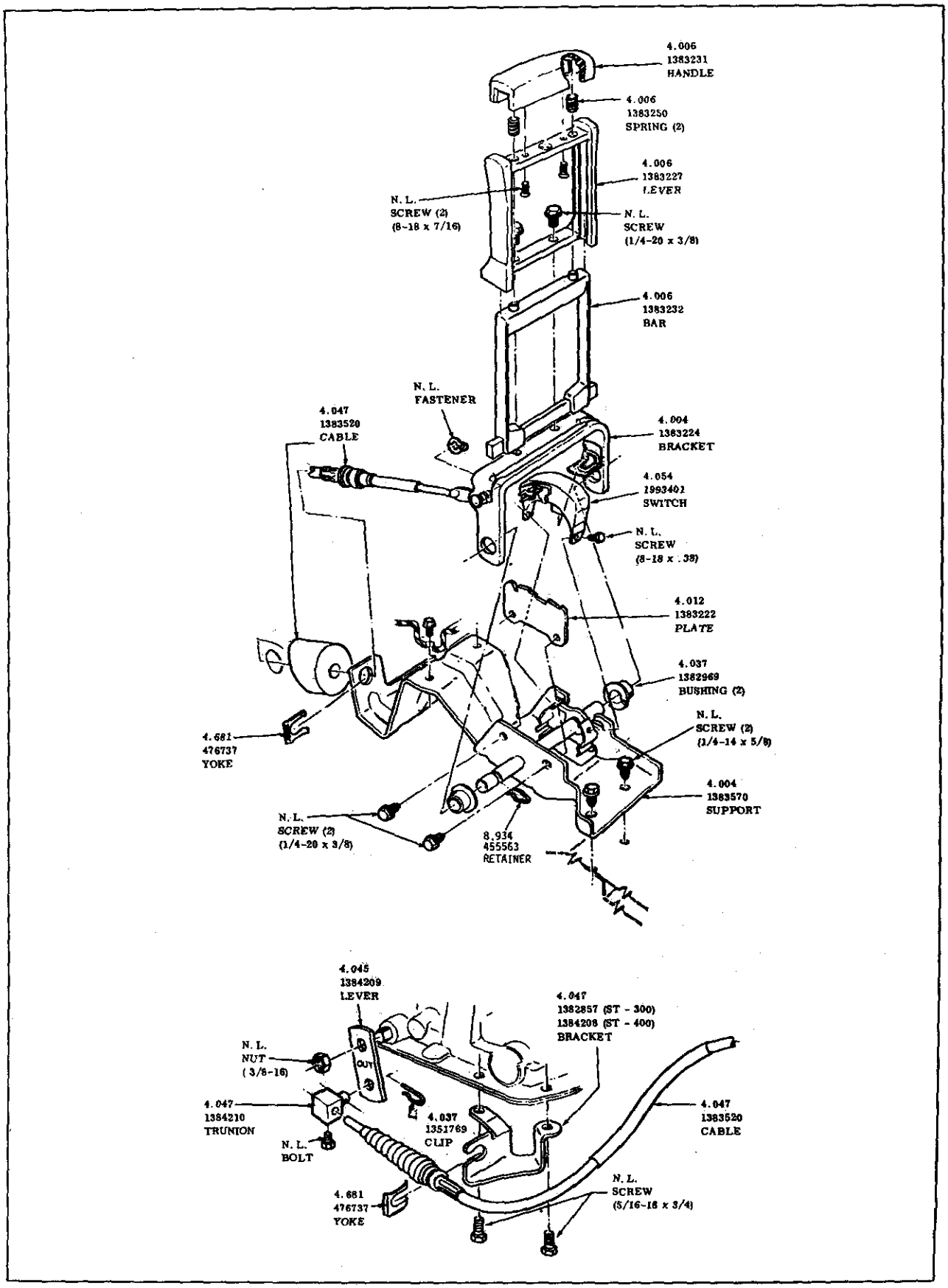

AUTO. TRANS. CONTROL (CONSOLE)
1968—SPECIAL—SKYLARK—GRAN-SPORT

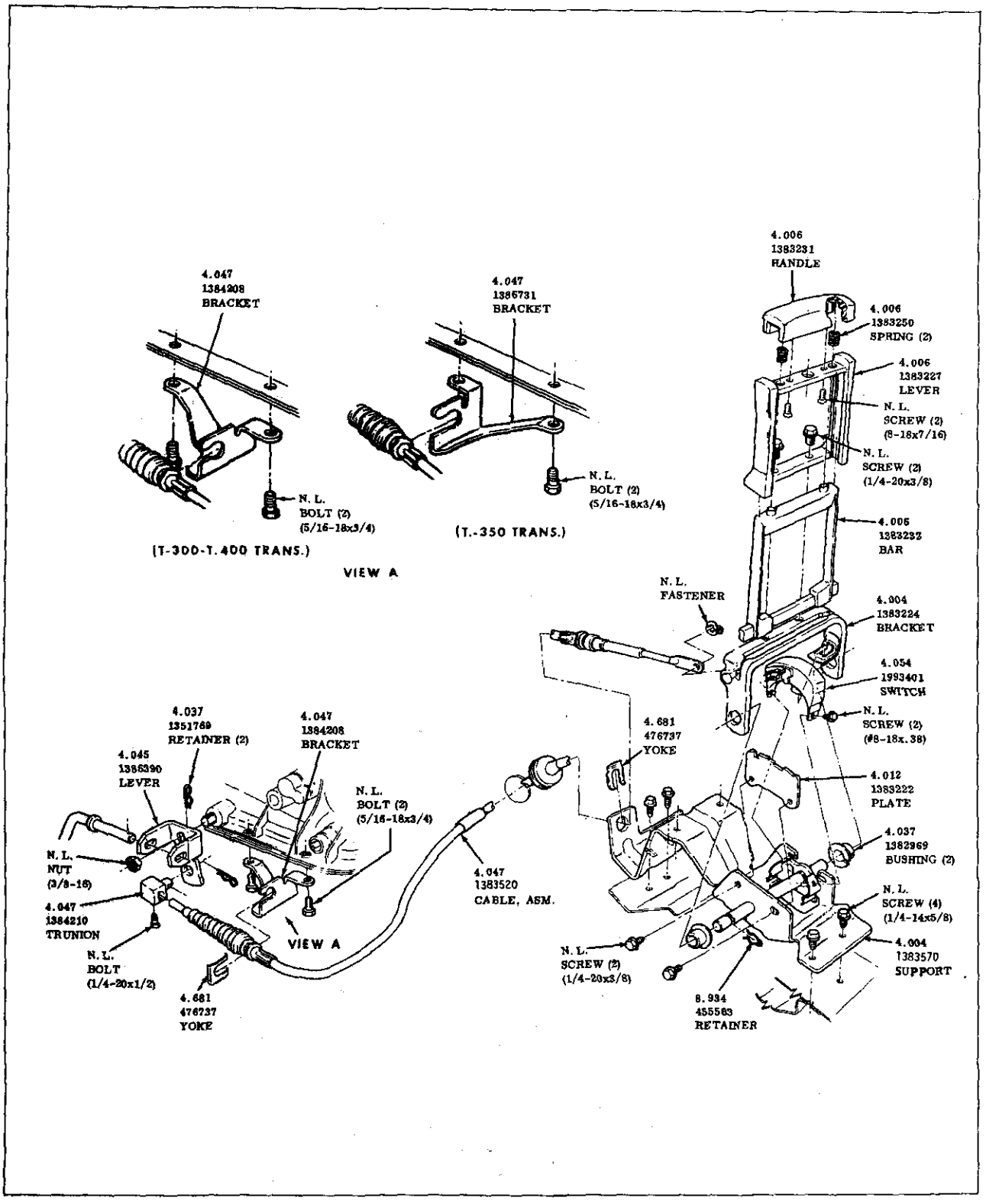

SUPER TURBINE 300
AUTOMATIC TRANSMISSION CONTROL
(CONSOLE) 1969-30-4000 & 6000

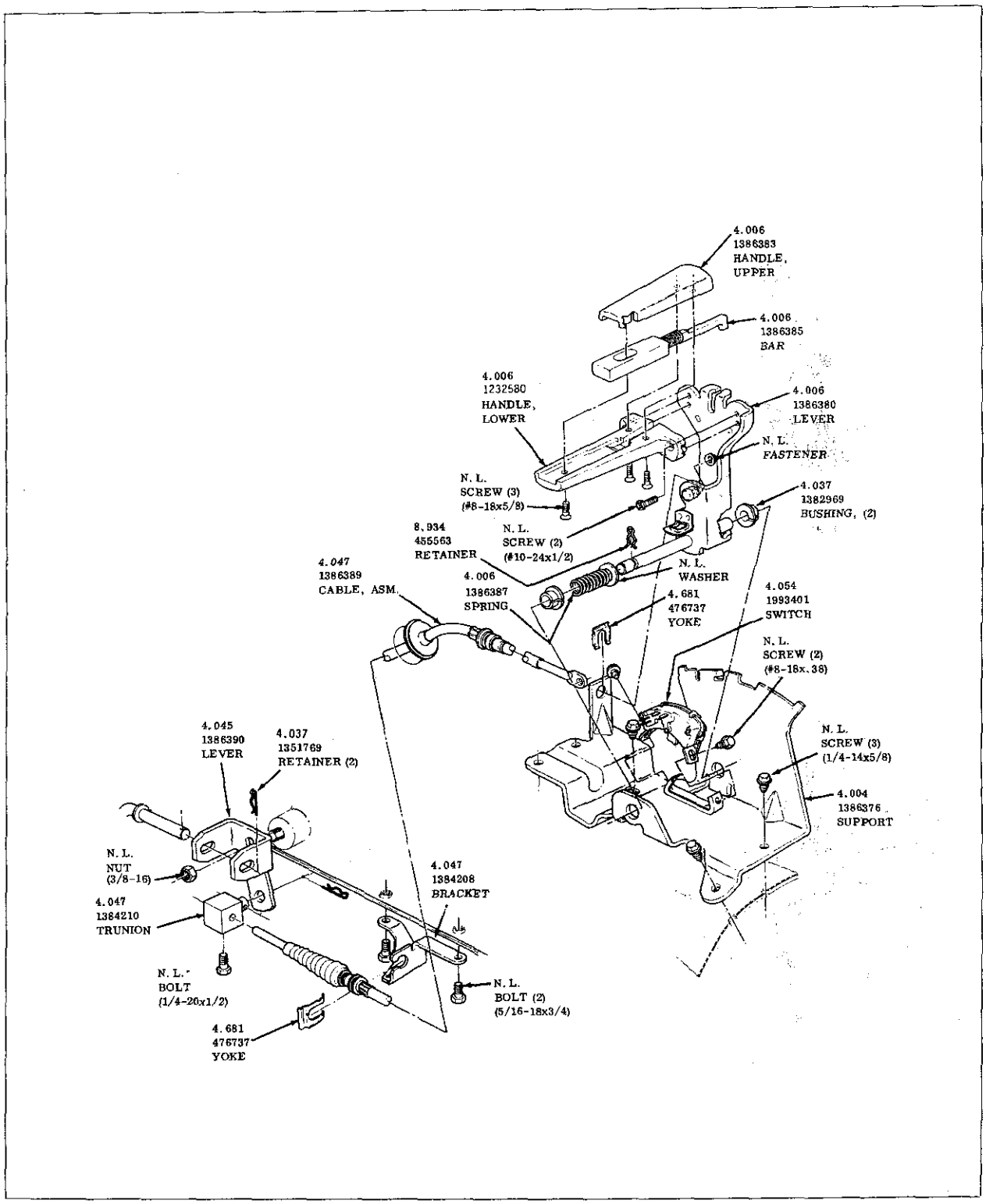

AUTOMATIC TRANSMISSION CONTROLS
1969-RIVIERA WITH CONSOLE

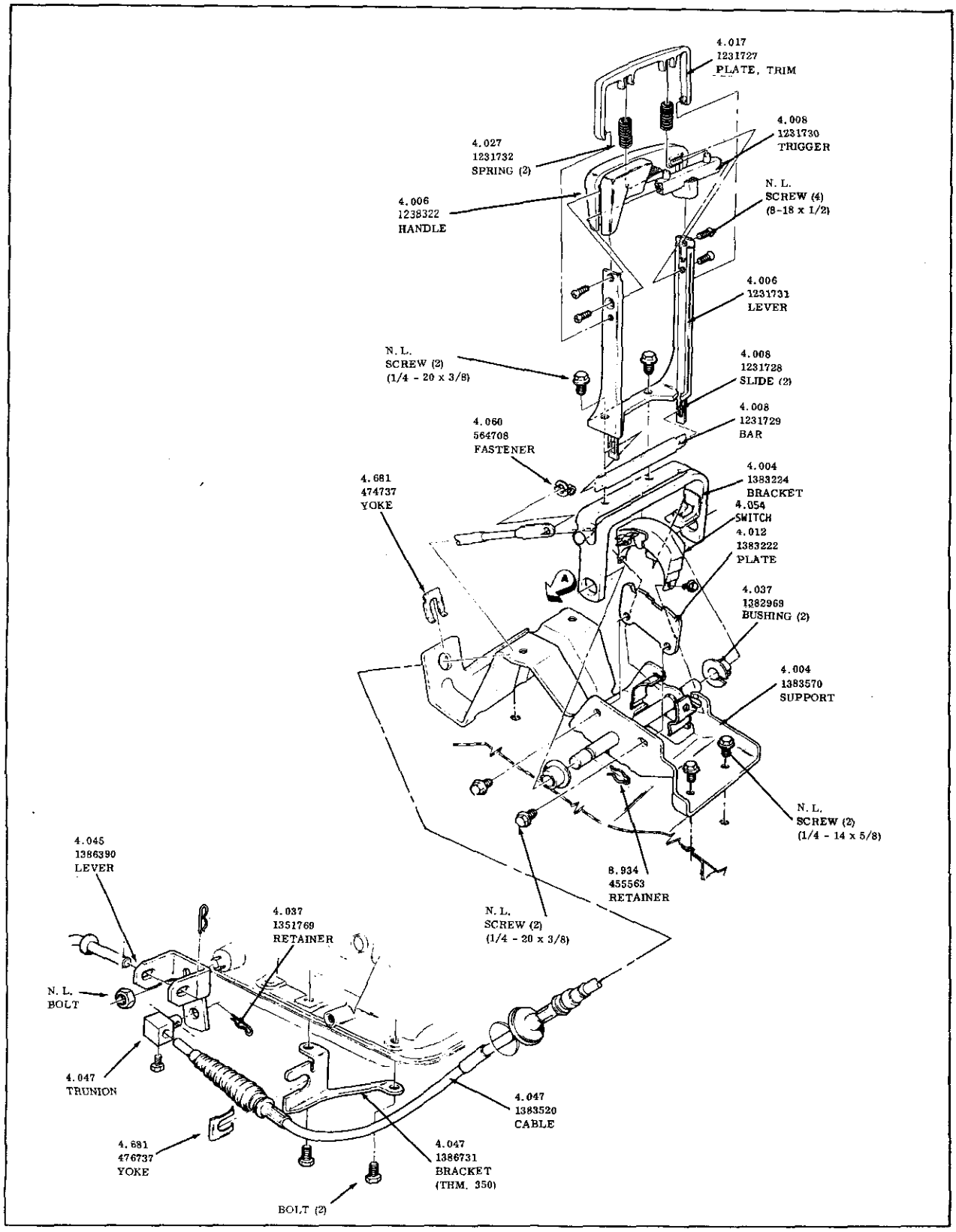

AUTOMATIC TRANSMISSION CONTROL
CONSOLE SHIFT
1970-1972 30-4000

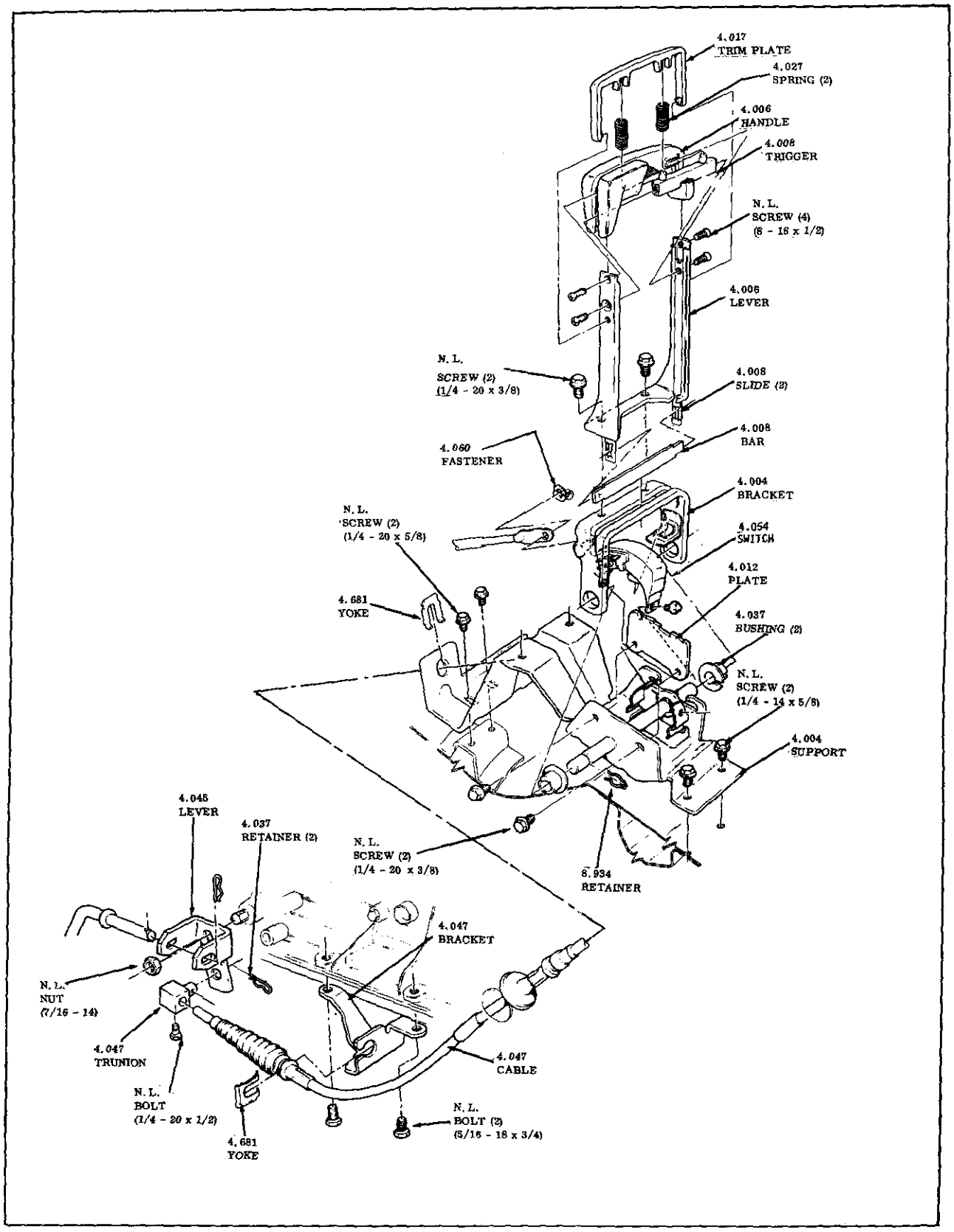

AUTOMATIC TRANSMISSION CONTROL
(CONSOLE)
1970-1972 6000

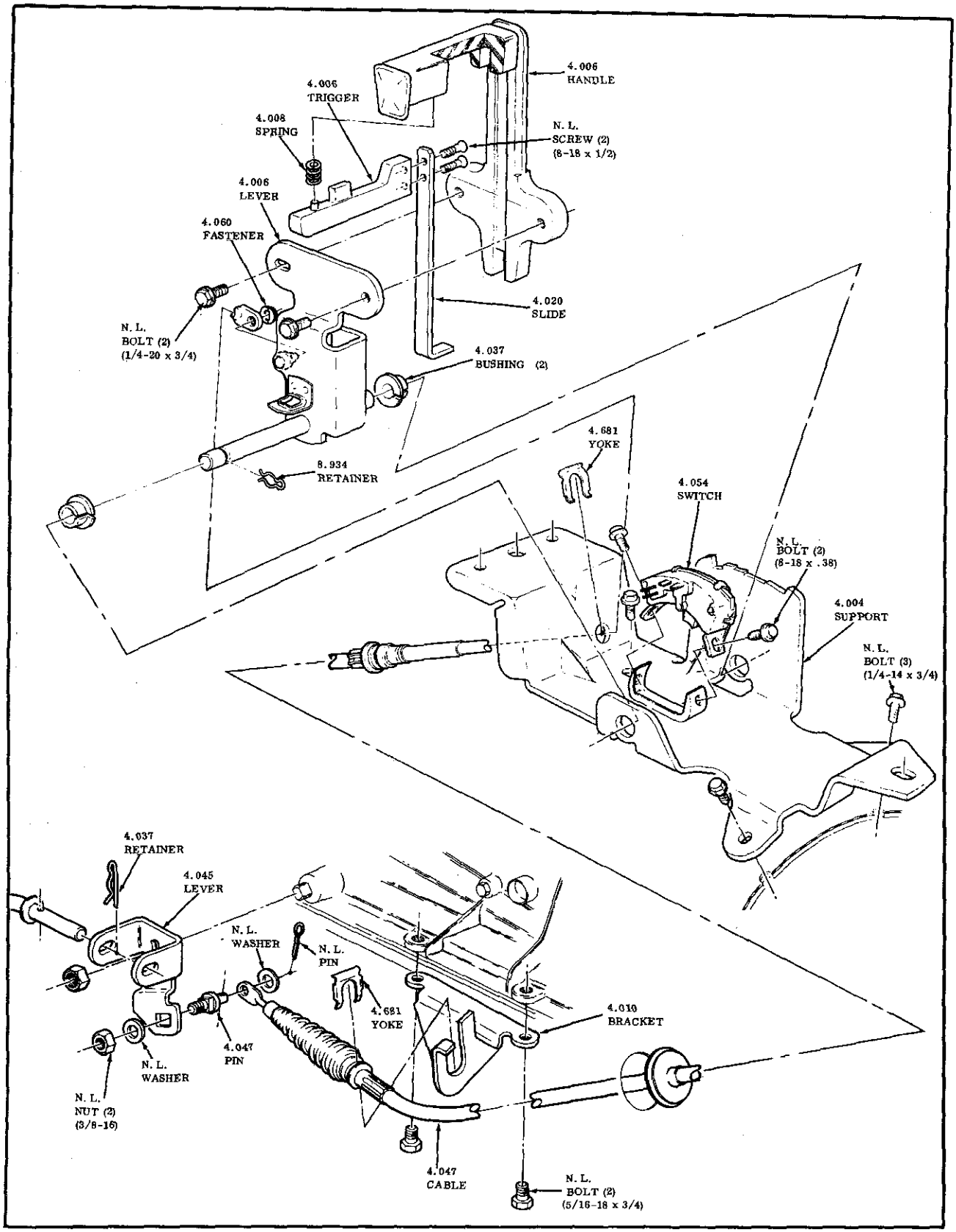

AUTOMATIC TRANSMISSION CONTROL
(CONSOLE)
1971-1972 9000

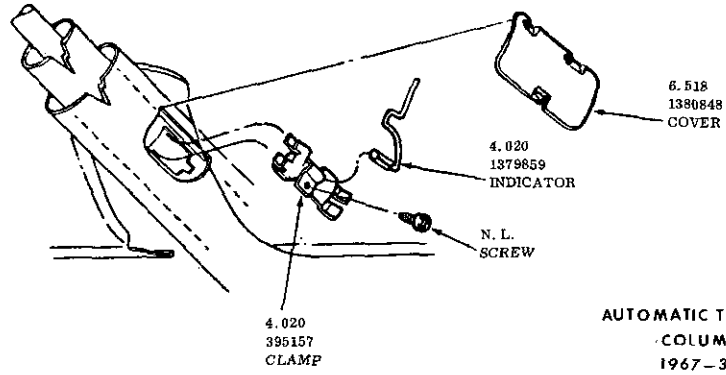

AUTOMATIC TRANSMISSION
COLUMN SHIFT
1967–30–4000

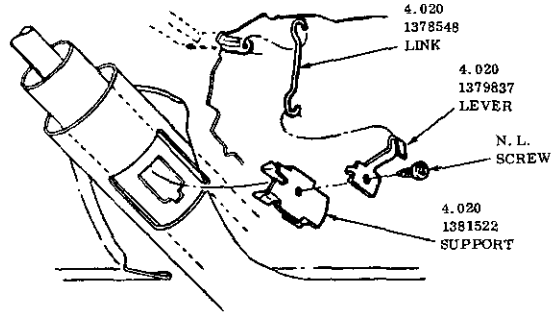

AUTOMATIC TRANSMISSION
COLUMN SHIFT
1967–50–60–8000

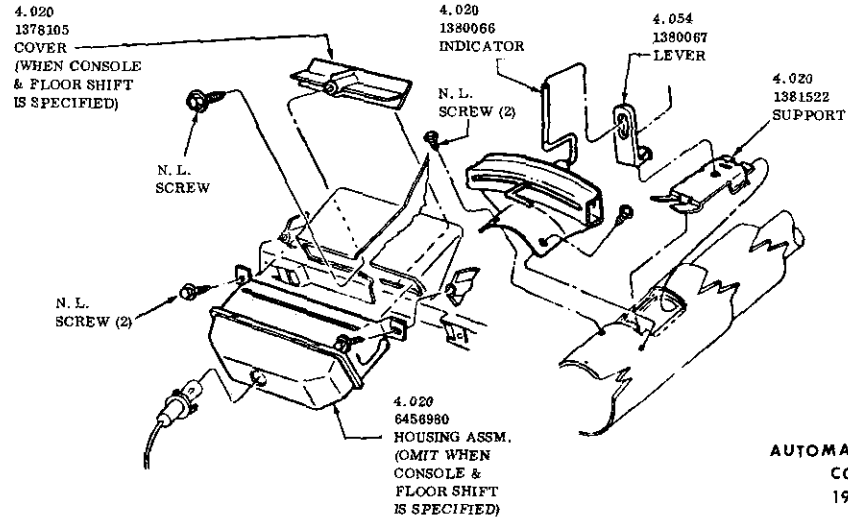

AUTOMATIC TRANSMISSION
COLUMN SHIFT
1967–RIVIERA

TRANSMISSION SHIFT INDICATOR
1967–ALL

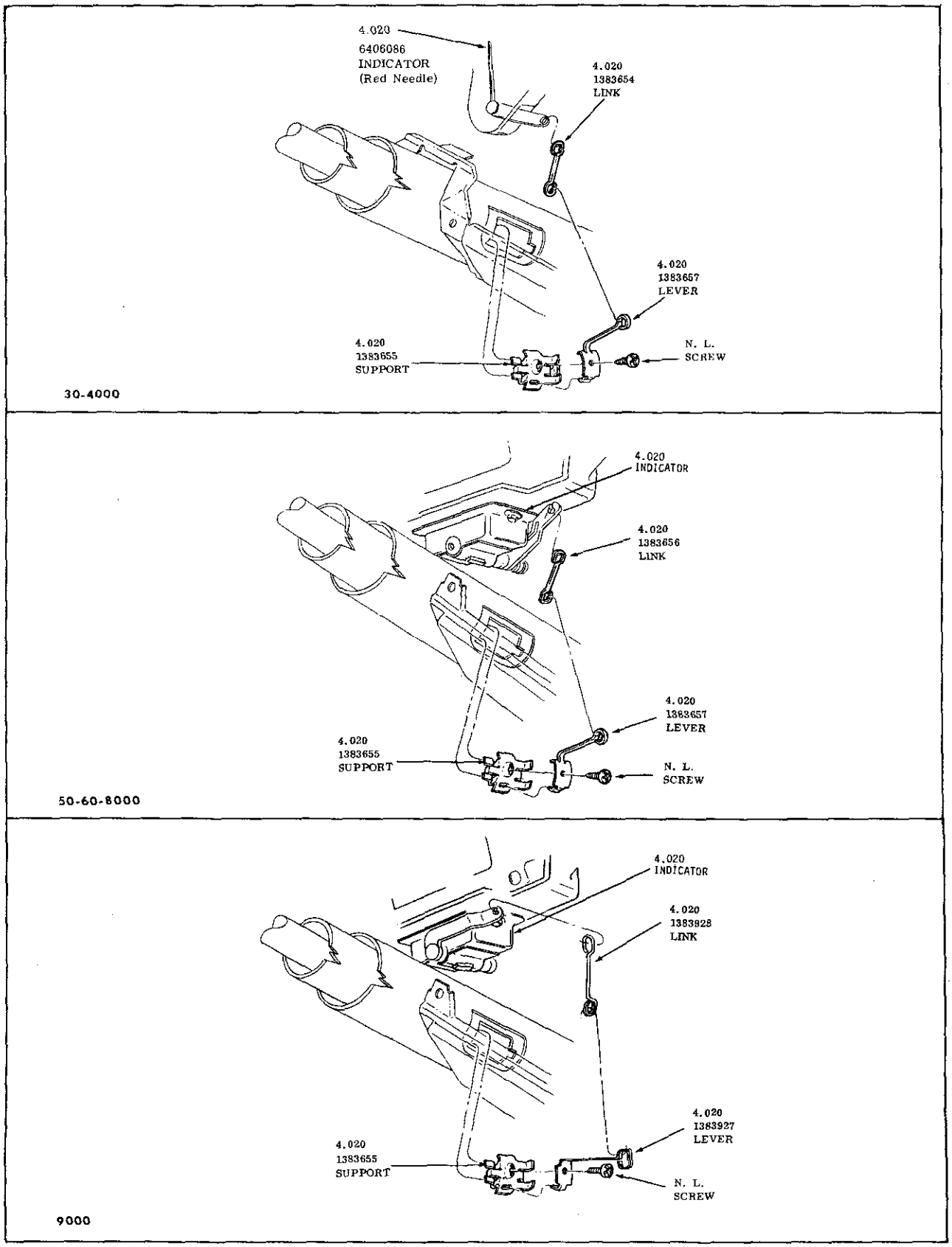

TRANSMISSION SHIFT INDICATOR
1968-ALL

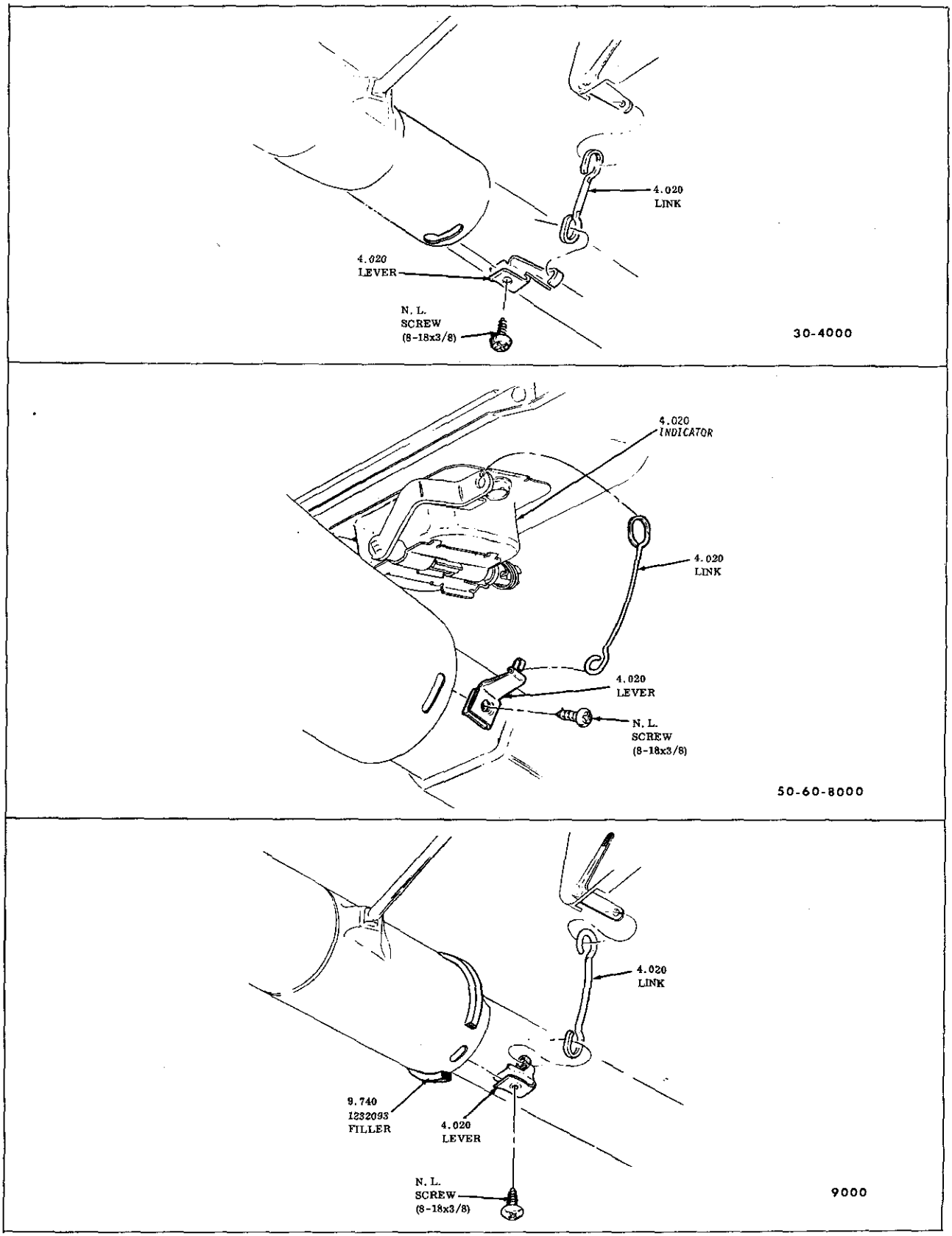

TRANSMISSION SHIFT INDICATOR
1969-ALL

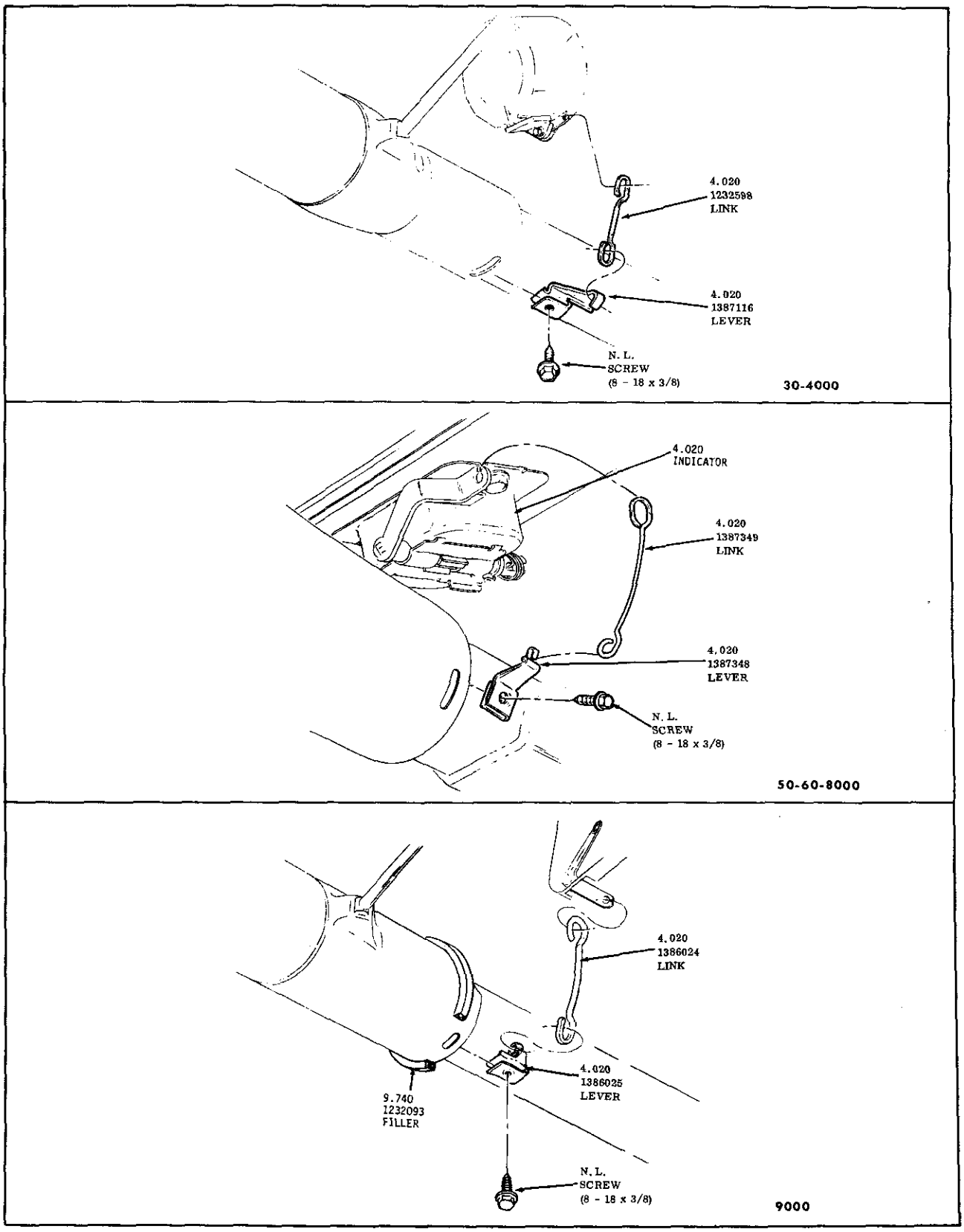

TRANSMISSION SHIFT INDICATOR
1970-ALL

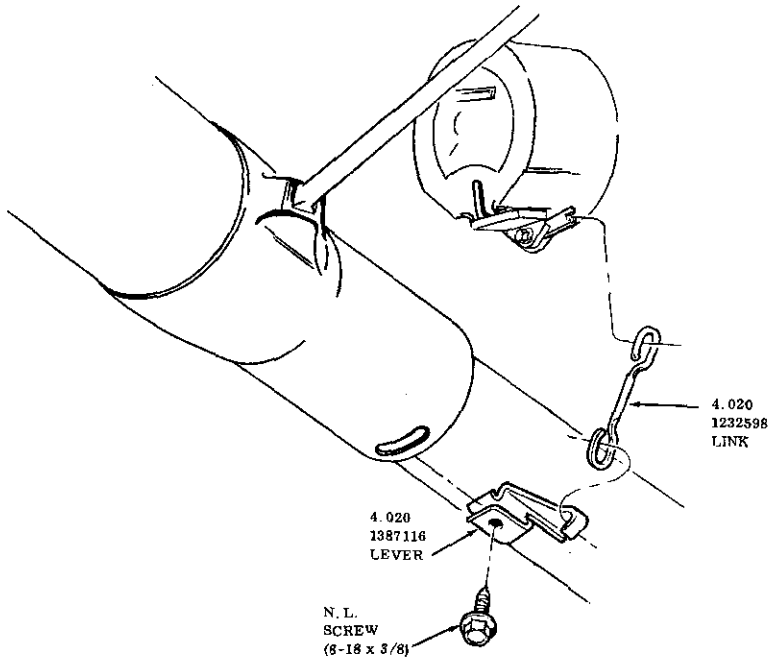

30-4000

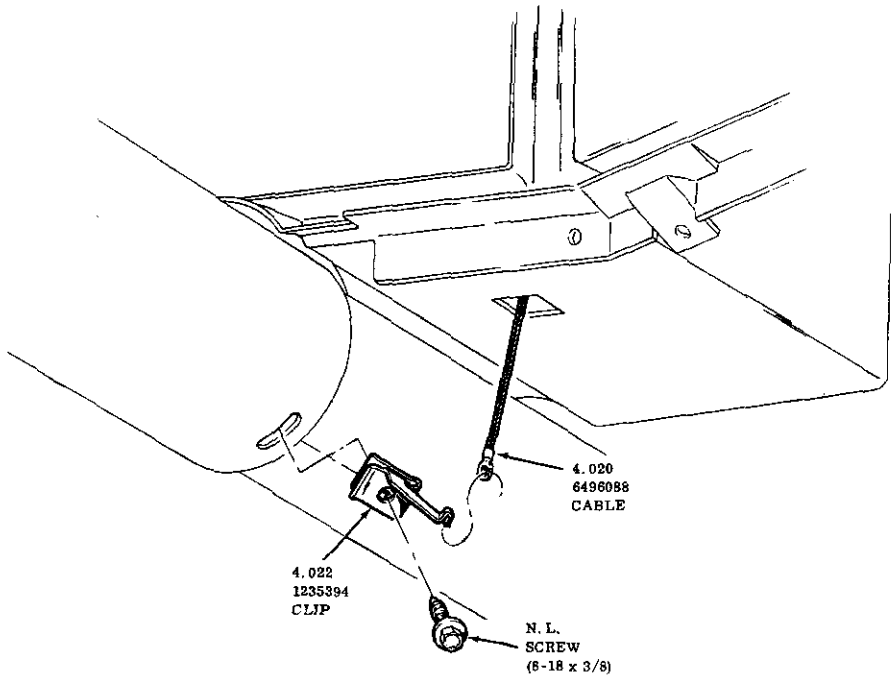

50-60-80-9000

SHIFT INDICATOR
1971-1972 ALL

MEMORANDA

BRAKE UNIT PARTS

AND

PARKING BRAKES

MEMORANDA

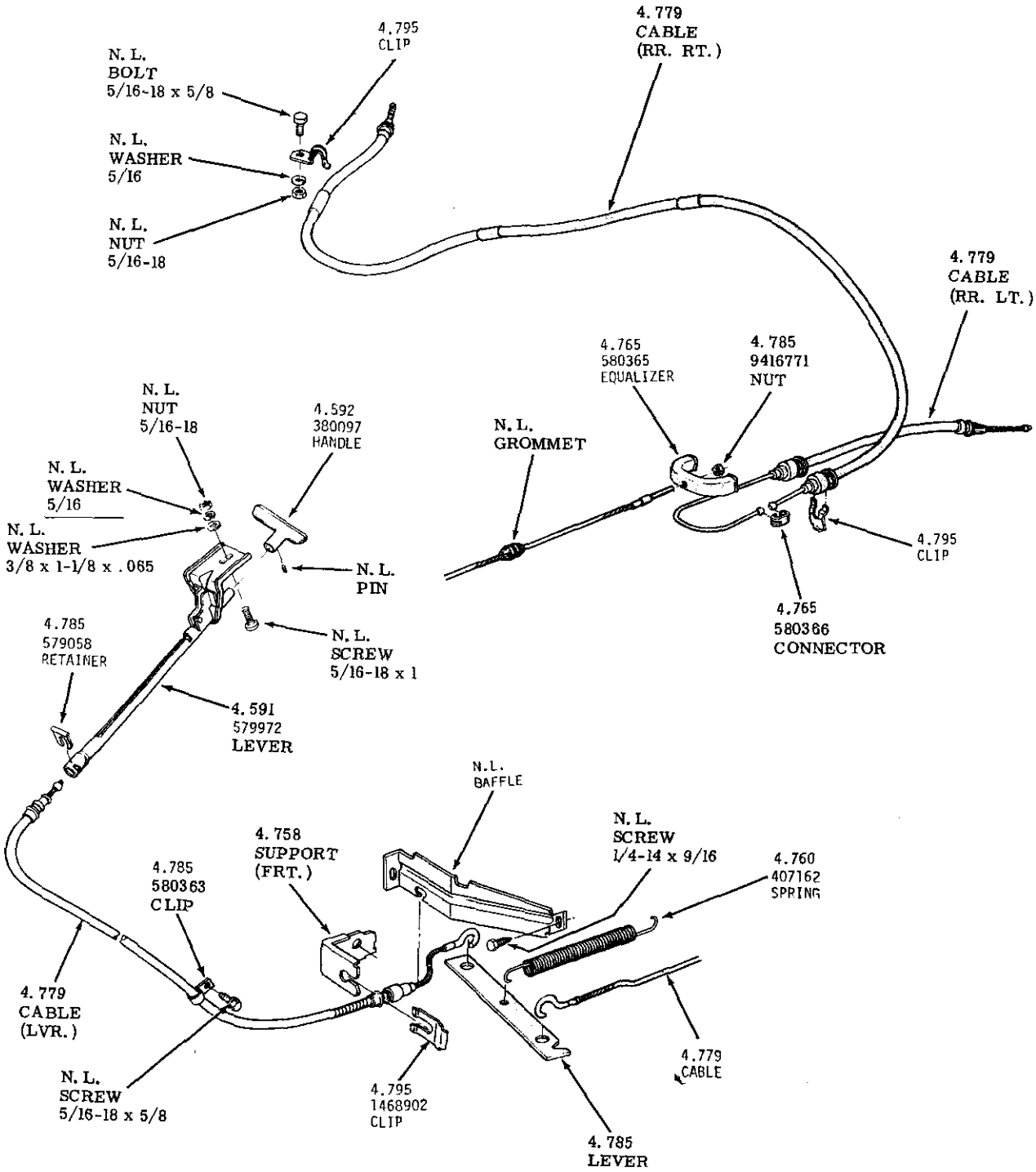

PARKING BRAKE 1961-63 40-41-4300

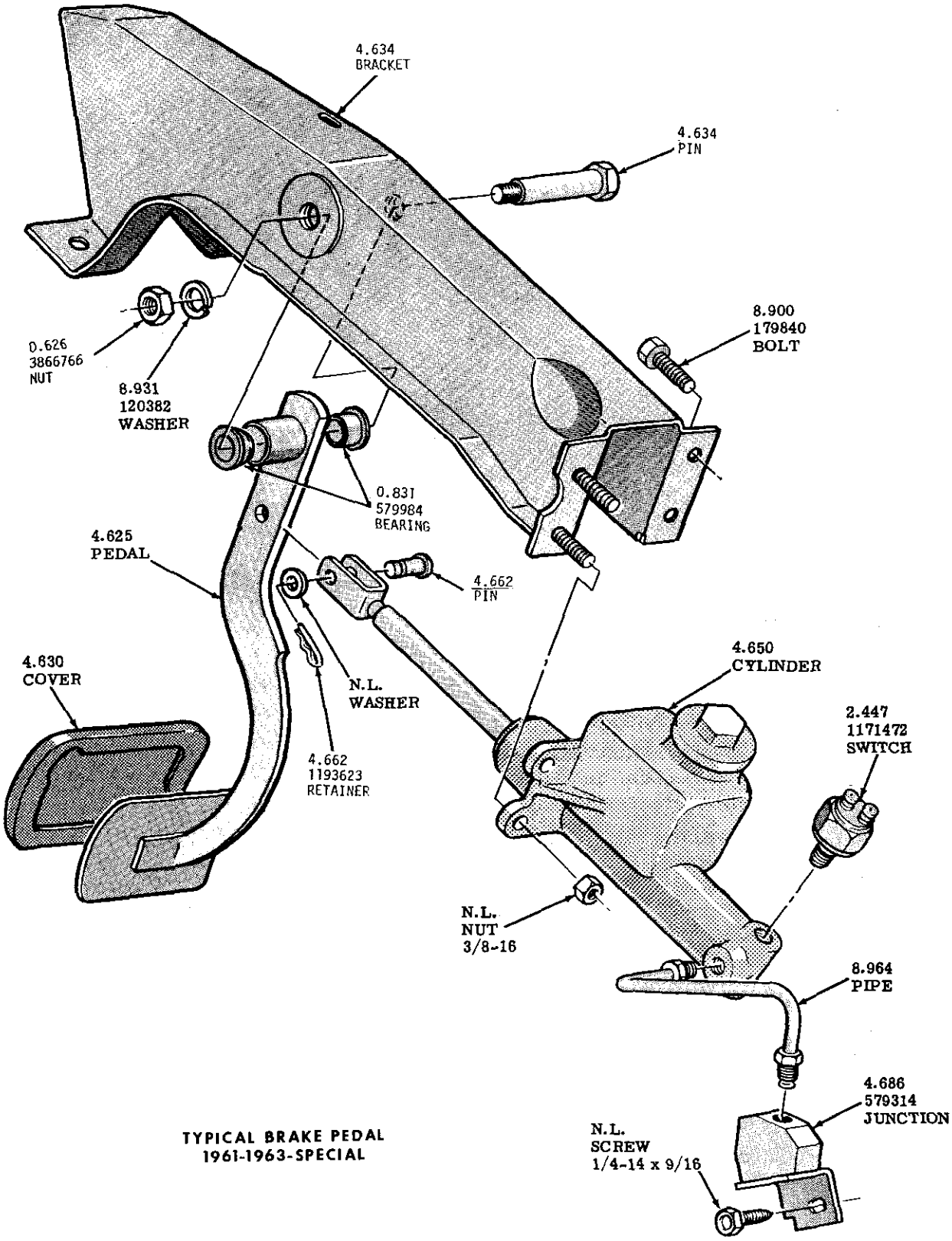

TYPICAL BRAKE PEDAL
1961-1963-SPECIAL

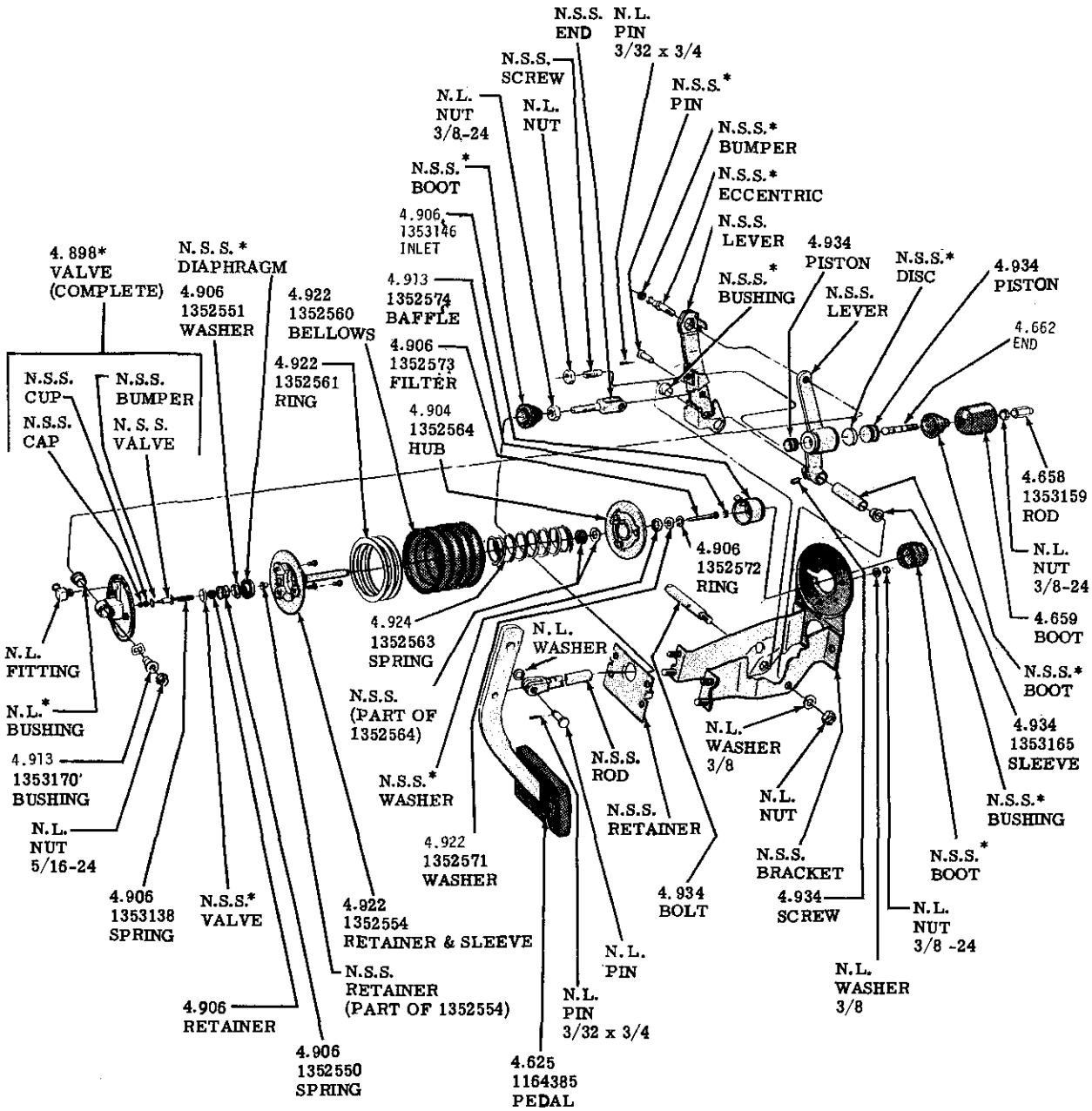

*NOTE, INCLUDED IN KIT 1396023 9RP 4.698

POWER BRAKE BELLOWS 1962-63 40-41-4300

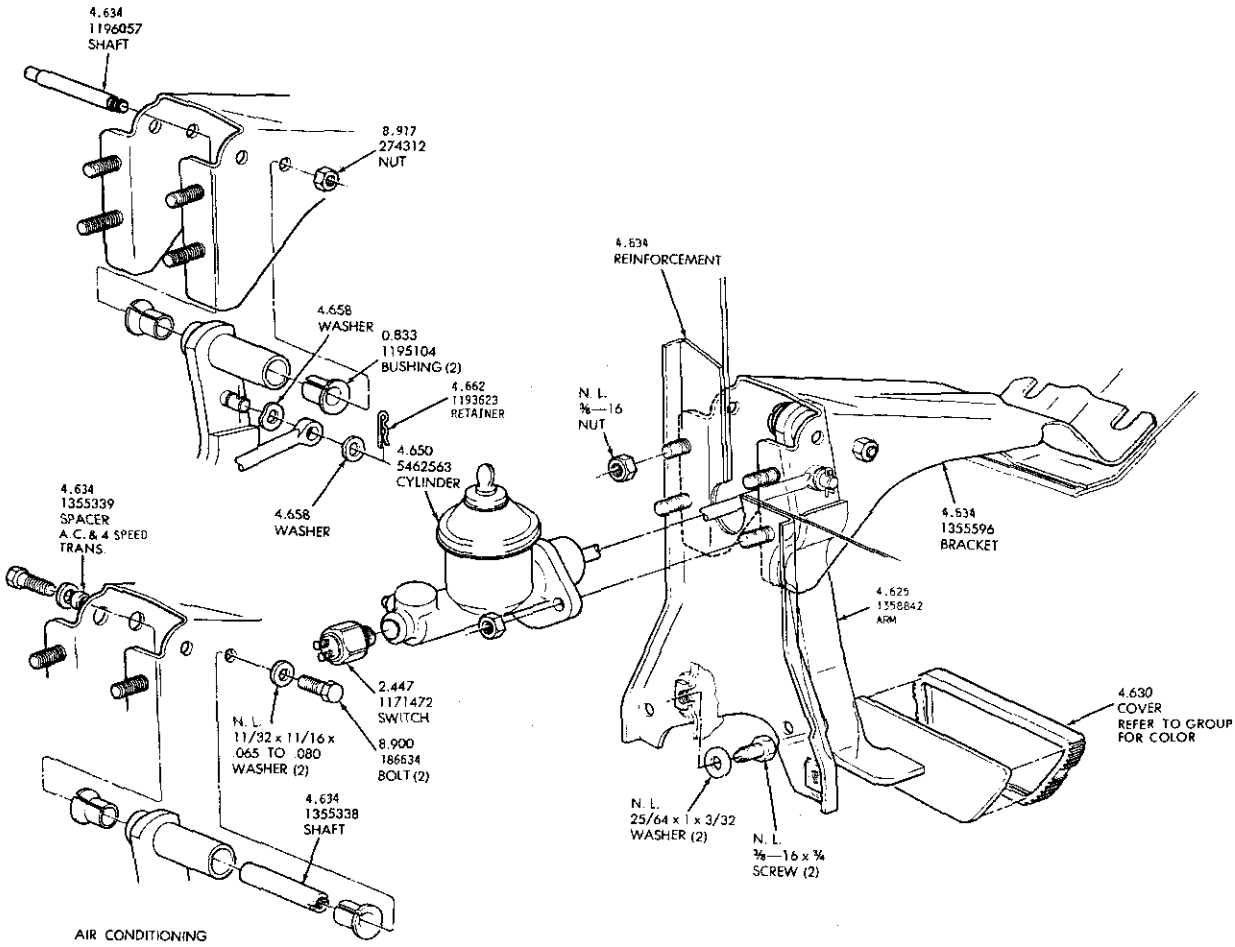

BRAKE PEDAL AND MASTER CYLINDER
(Manual)
1963 — 4400-4600

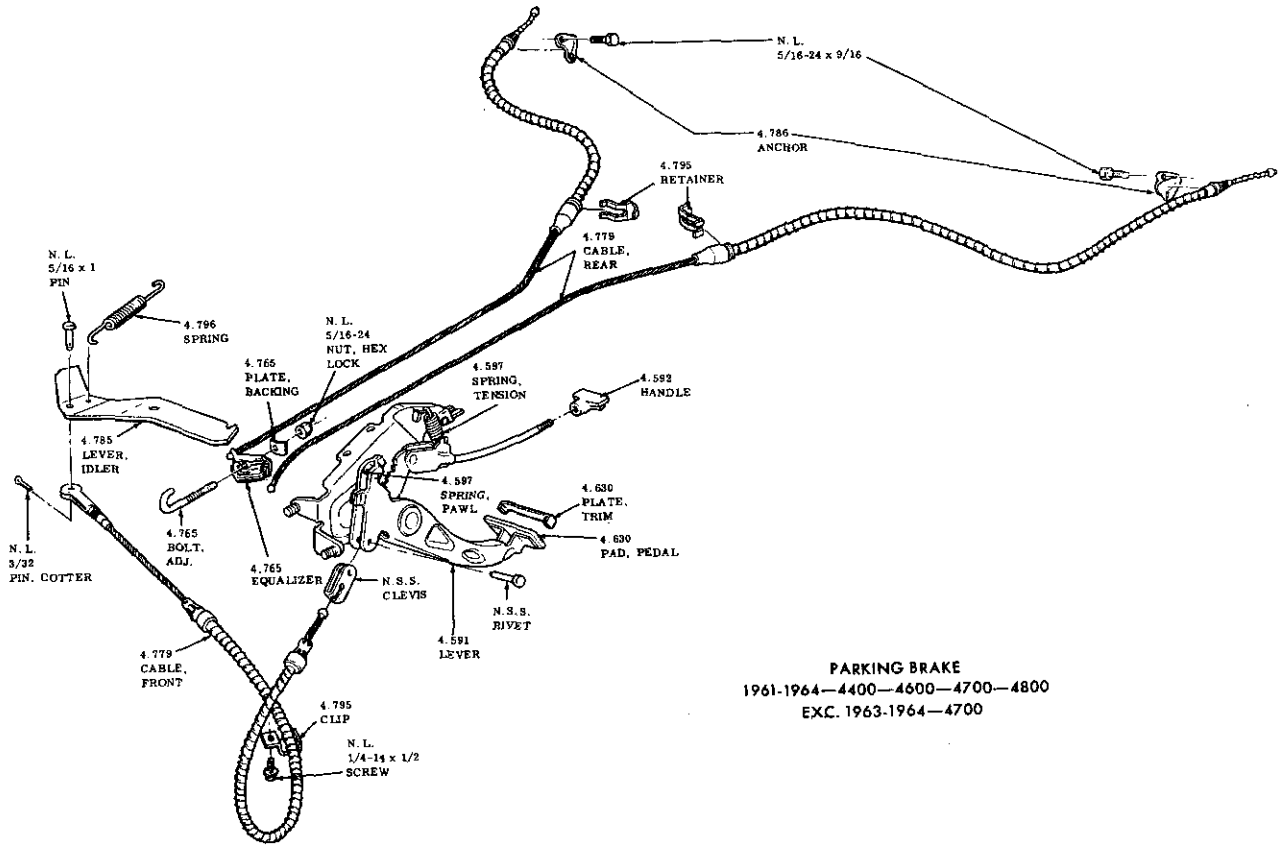

PARKING BRAKE
1961-1964—4400—4600—4700—4800
EXC. 1963-1964—4700

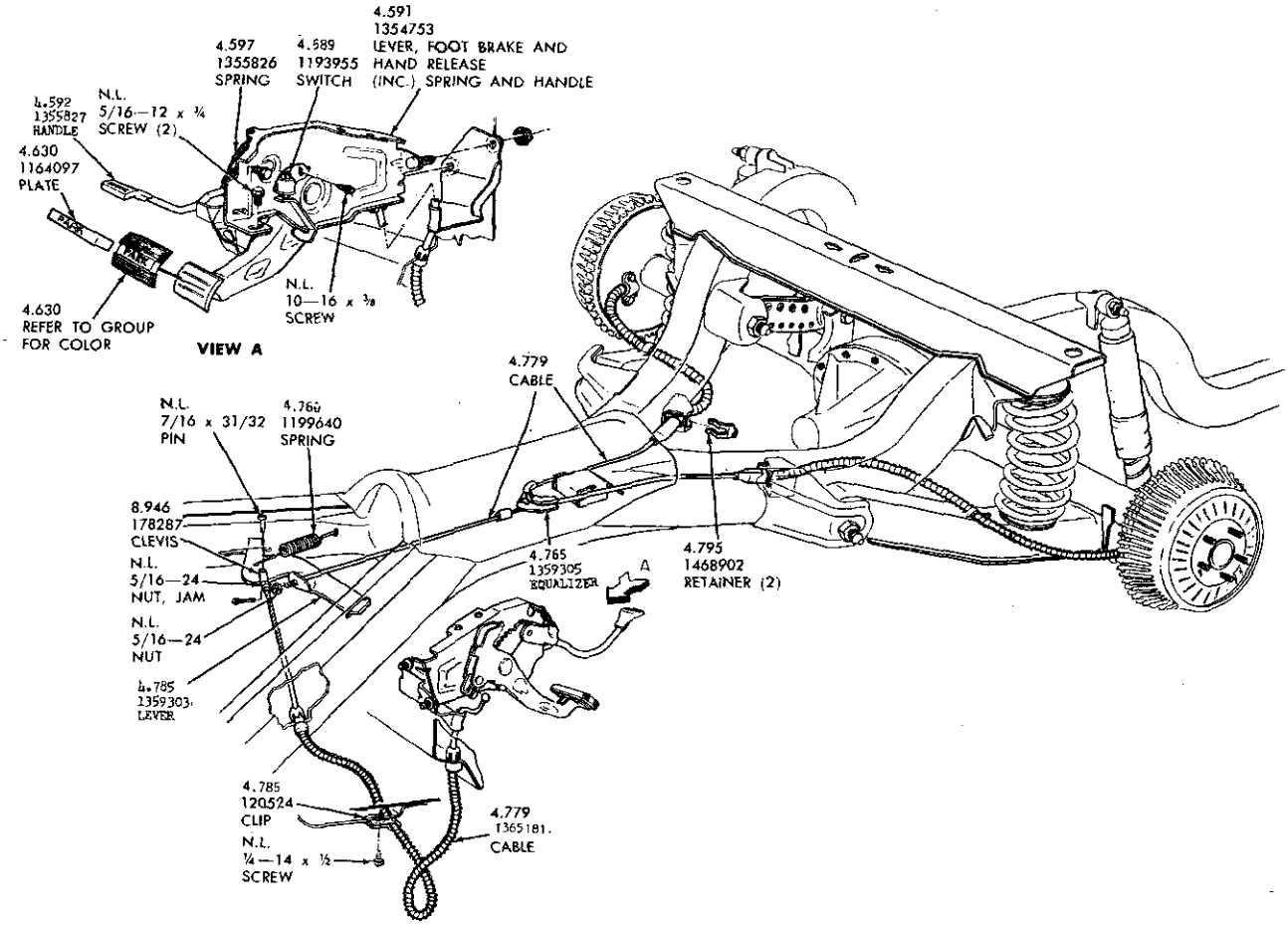

PARKING BRAKE 1963—1964-4700

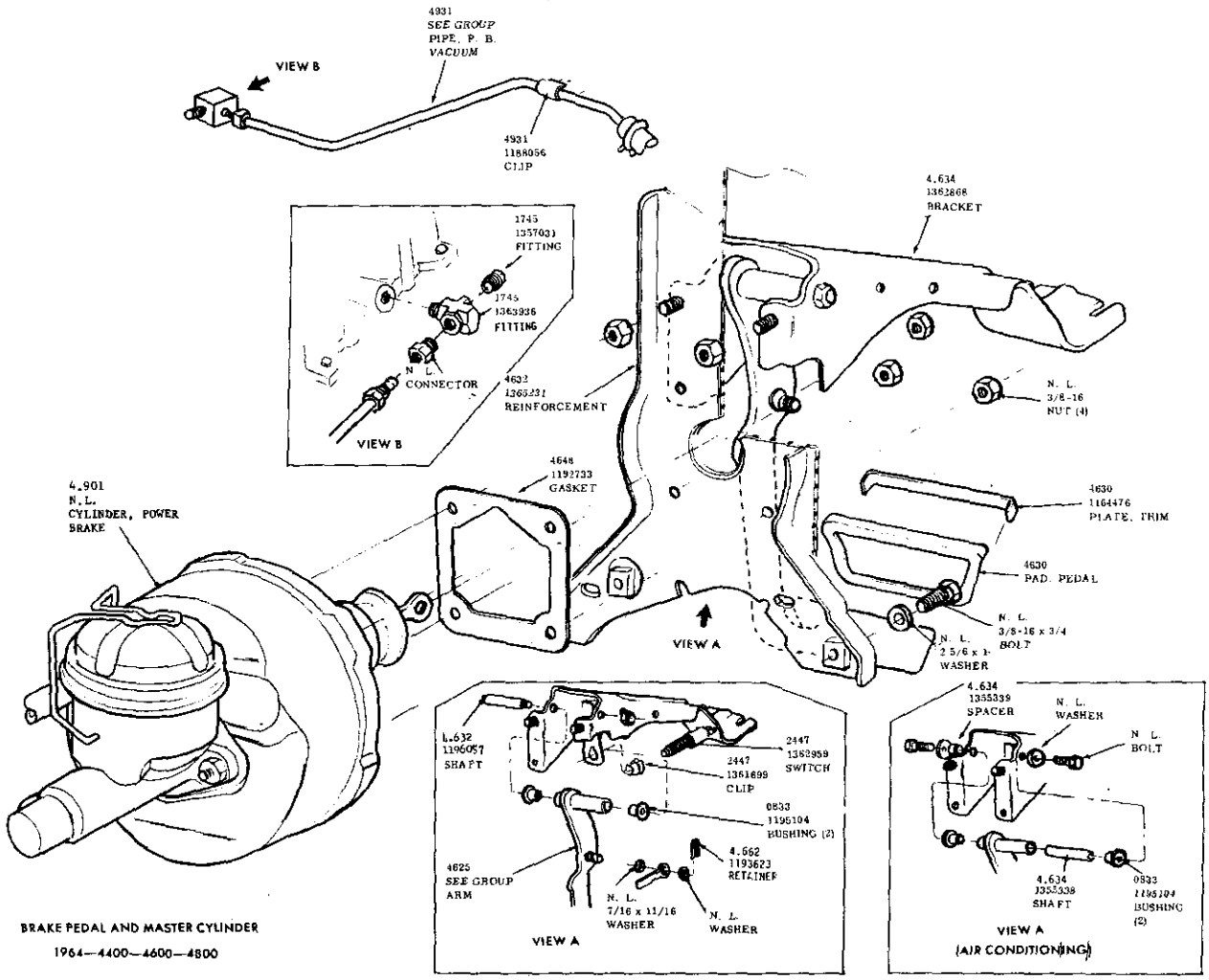

BRAKE PEDAL AND MASTER CYLINDER

1964—4400—4600—4800

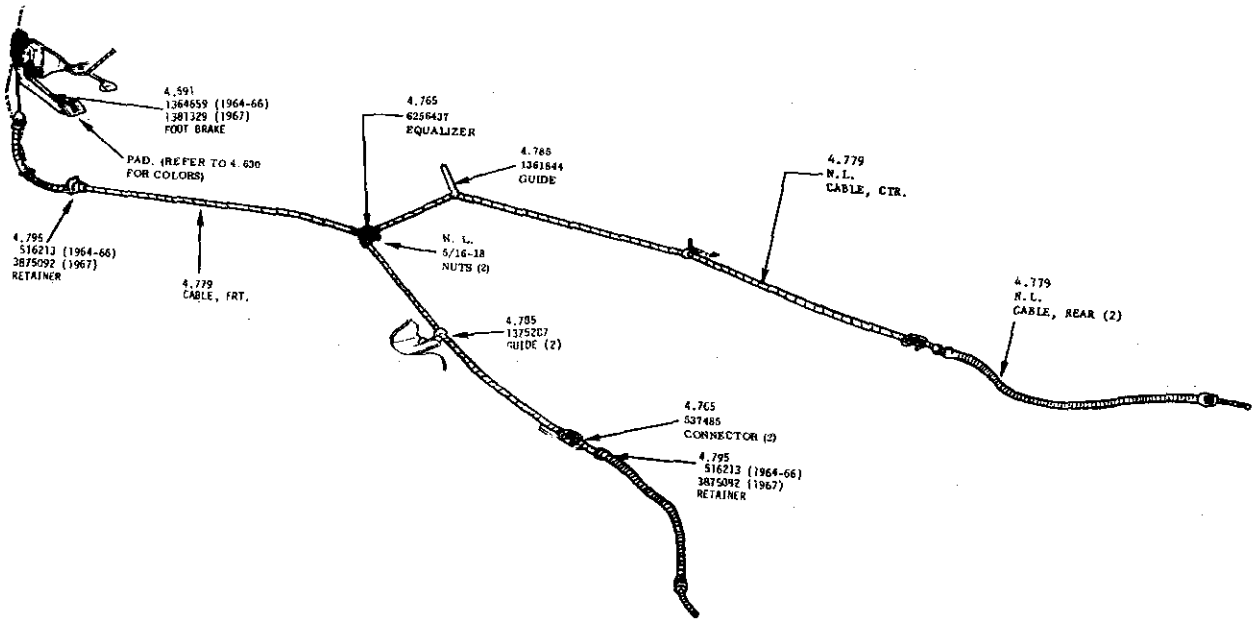

PARKING BRAKE
1964-1967-30-4000

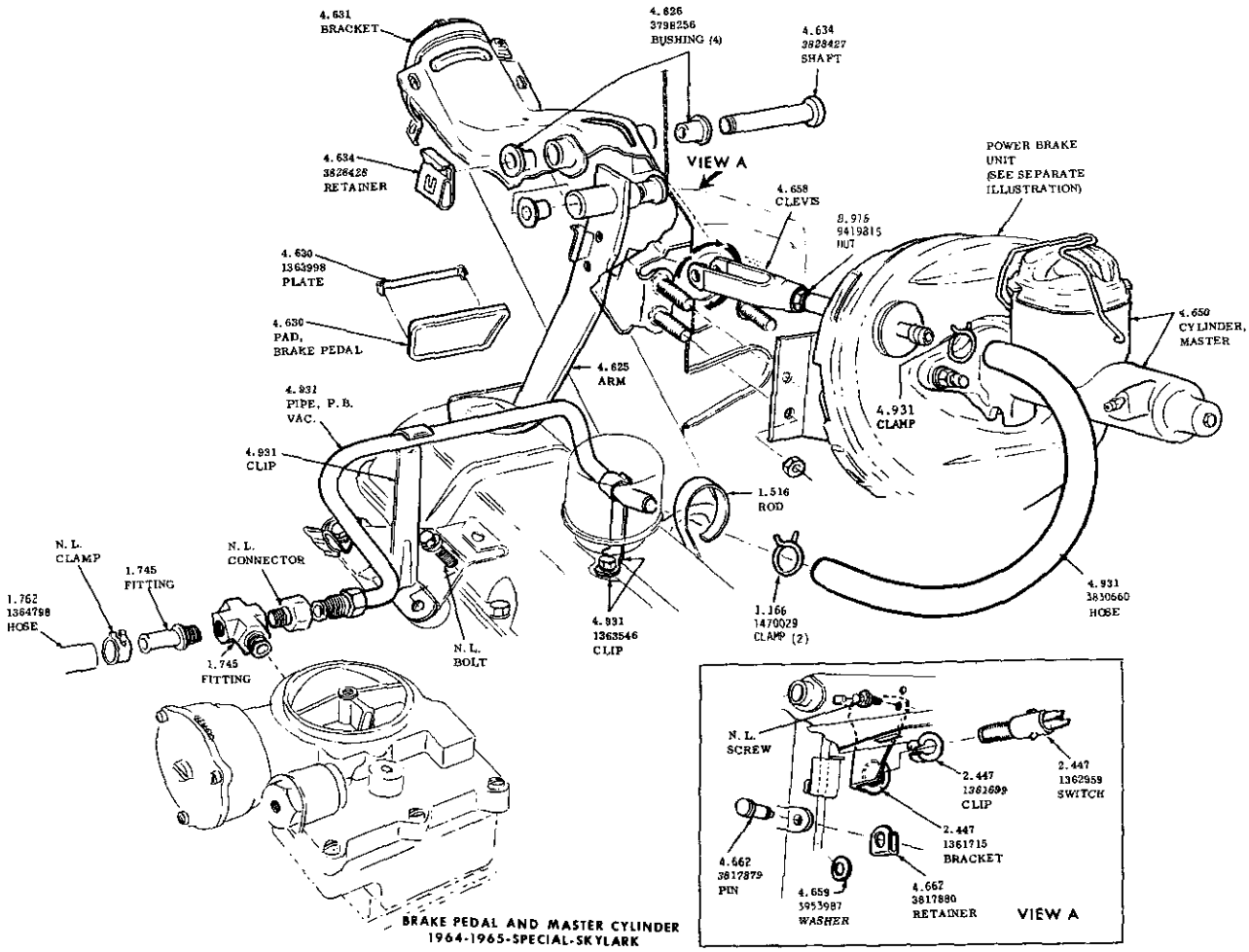

BRAKE PEDAL AND MASTER CYLINDER
1964-1965-SPECIAL-SKYLARK

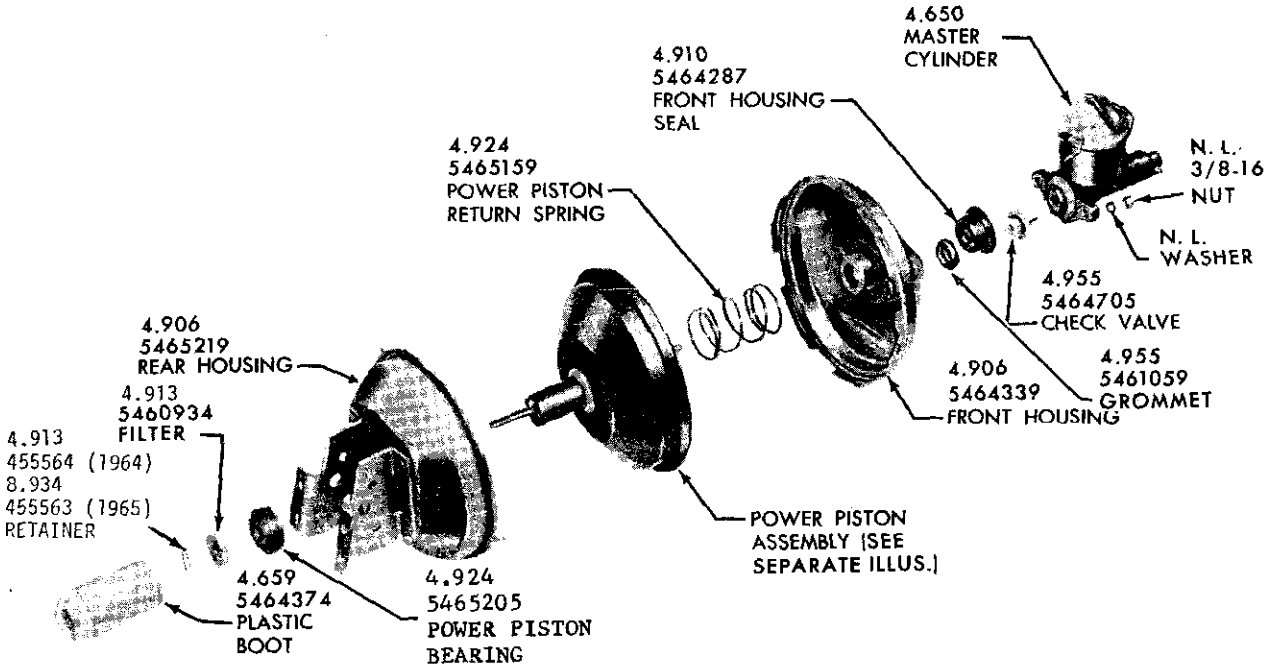

POWER BRAKE UNIT
DELCO MORAINE
1964-1965 SPECIAL - SKYLARK

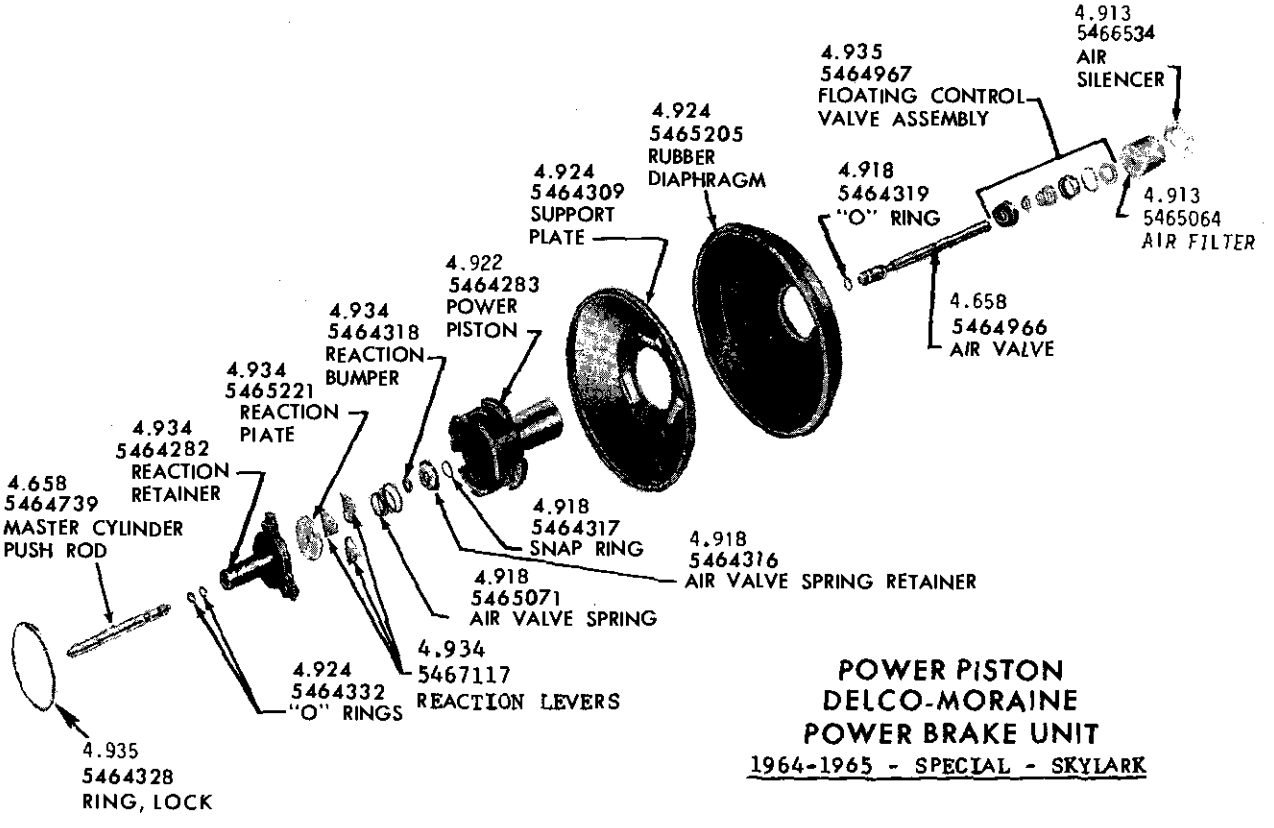

POWER PISTON
DELCO-MORAINE
POWER BRAKE UNIT
1964-1965 - SPECIAL - SKYLARK

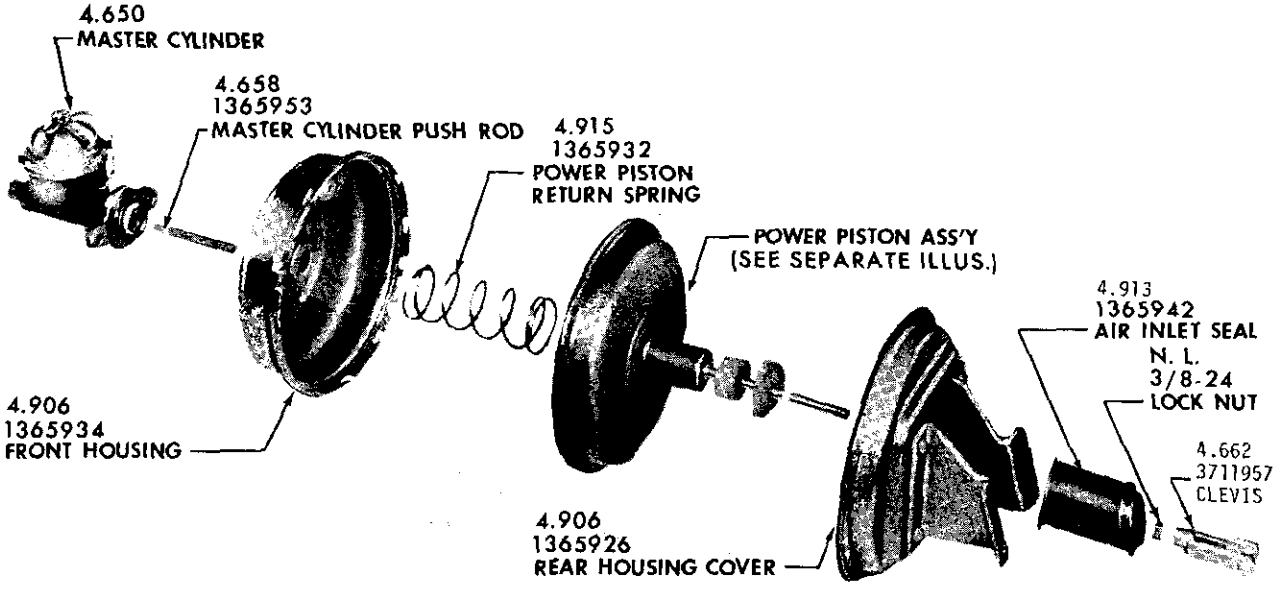

POWER BRAKE UNIT
KELSEY-HAYES
1964--4000—4100—4200—4300

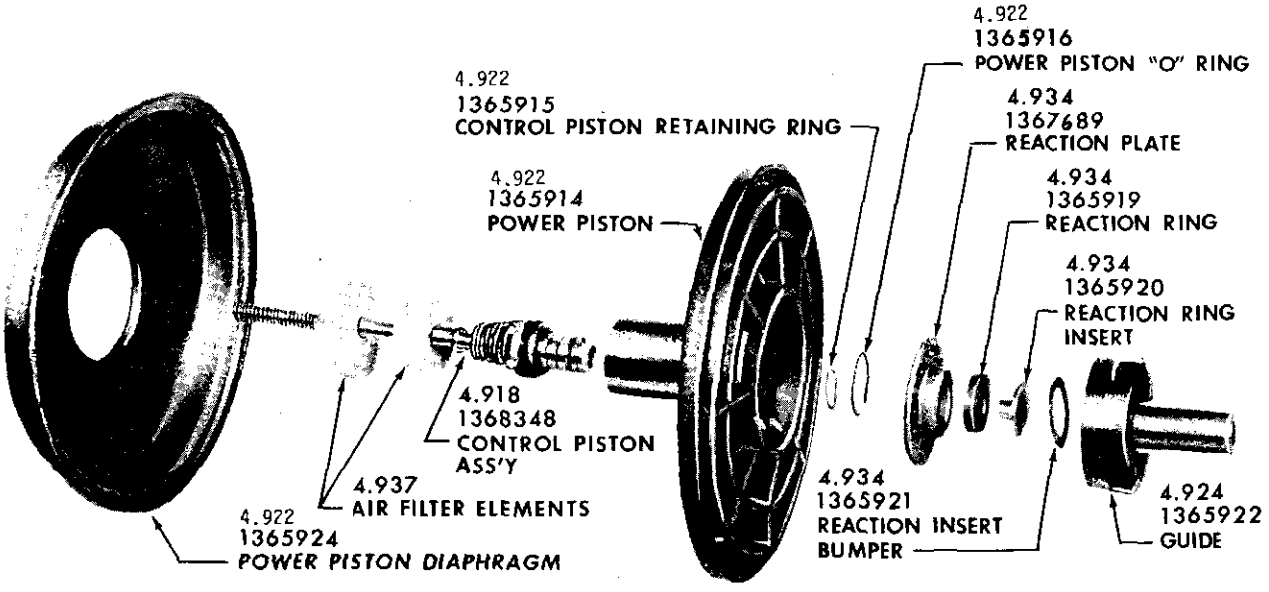

POWER PISTON
POWER BRAKE UNIT
KELSEY-HAYES
1964--4000—4100—4200—4300

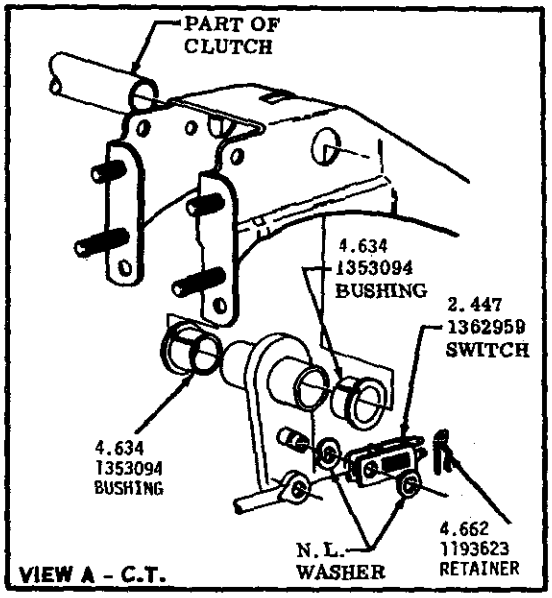

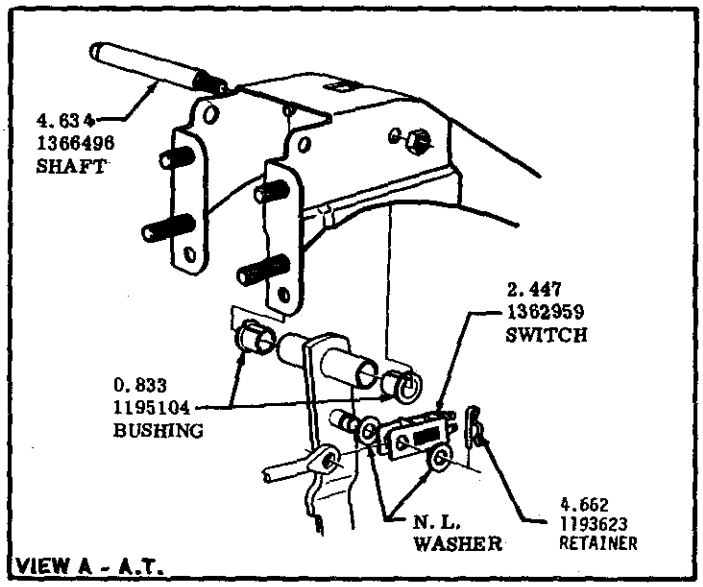

BRAKE PEDAL AND MASTER CYLINDER
1965 - LESABRE AND WILDCAT
MANUAL BRAKES

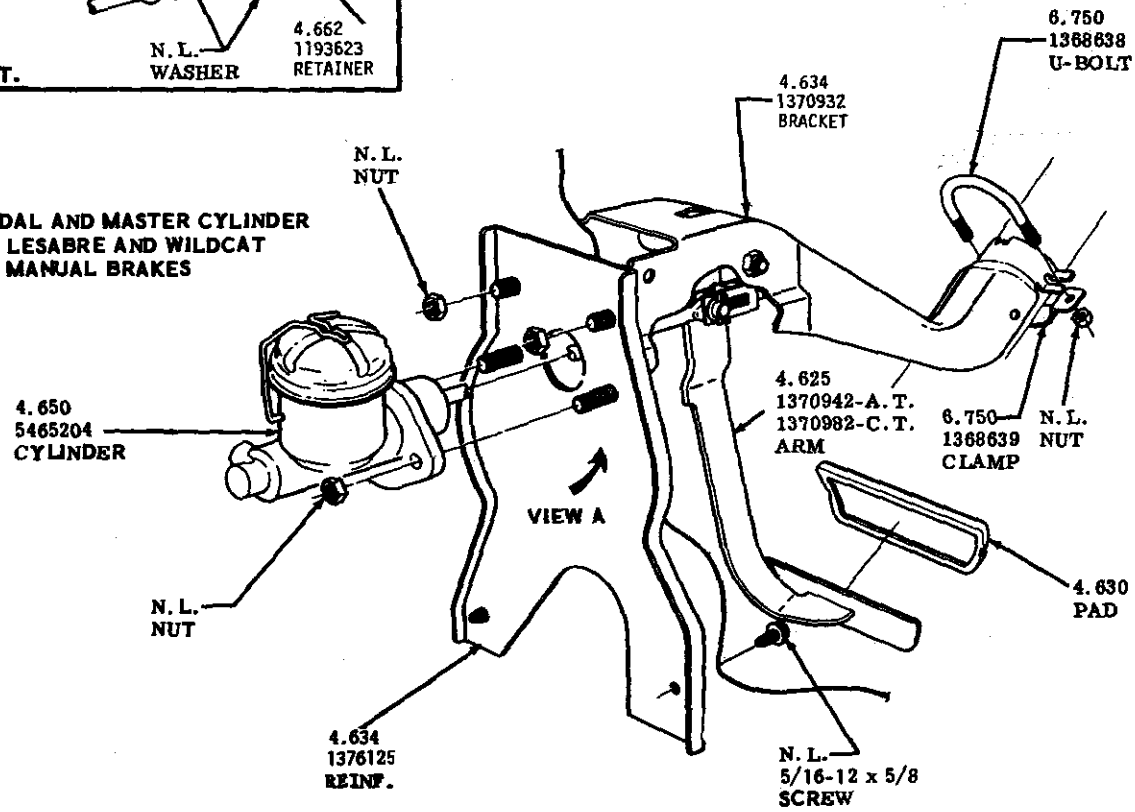

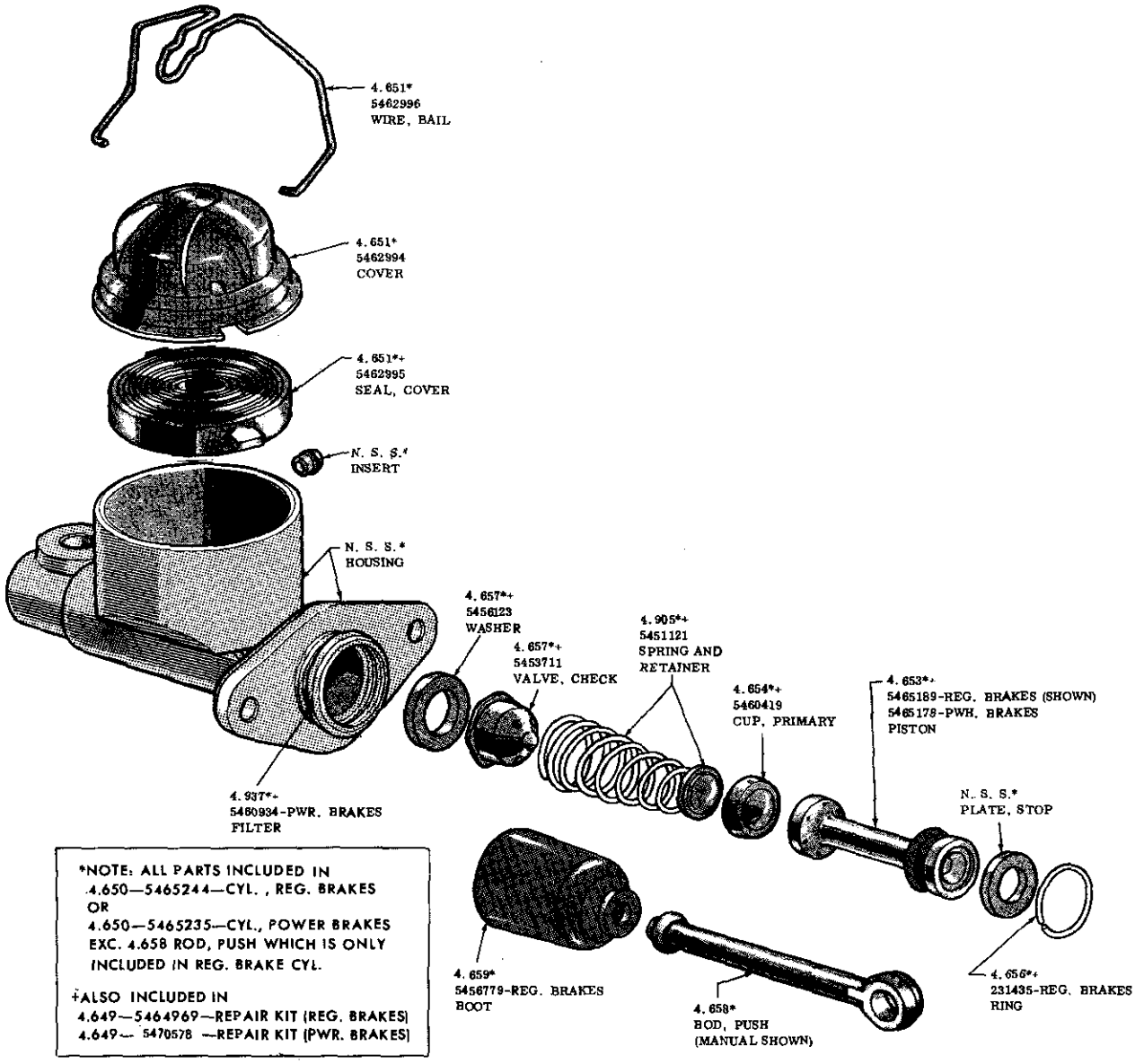

*NOTE: ALL PARTS INCLUDED IN
4.650—5465244—CYL., REG. BRAKES
OR
4.650—5465235—CYL., POWER BRAKES
EXC. 4.658 ROD, PUSH WHICH IS ONLY
INCLUDED IN REG. BRAKE CYL.

+ALSO INCLUDED IN
4.649—5464969—REPAIR KIT (REG. BRAKES)
4.649— 5470578 —REPAIR KIT (PWR. BRAKES)

1964 — 1966 BRAKE MASTER CYLINDER

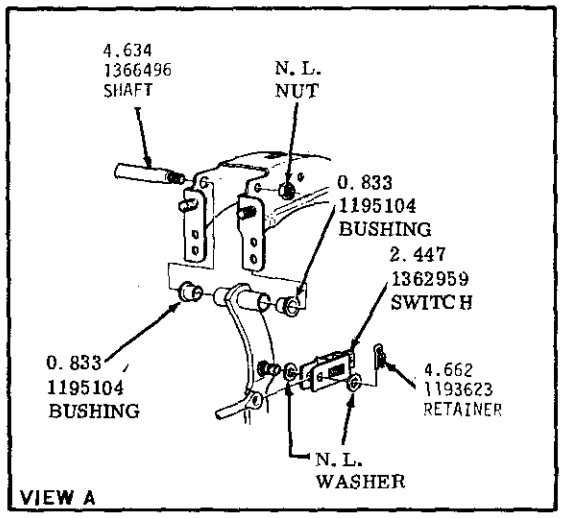

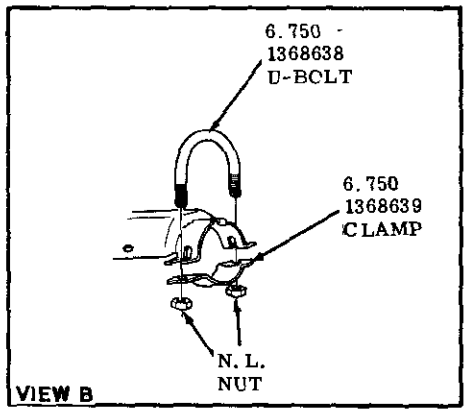

BRAKE PEDAL, AND MASTER CYLINDER
1965-LESABRE, WILDCAT, ELECTRA 225
POWER BRAKES

4.931
1369315
PIPE

TWO AND FOUR BARREL CARB.
(300 CU. IN. ENG.)

4.931
1370256
PIPE

4.931
1370557
PIPE

ONE FOUR BARREL CARB.
(401 + 425 CU. IN. ENG.)

TWO FOUR BARREL CARBS.
425 CU. IN. ENG.

4.634
1370932
BRACKET

VIEW B

4.634
1367027
REINF.

N. L.
NUT

N.A.
PLATE

4.901
CYLINDER
POWER BRAKE

N. L.
3/8-16
NUT

4.630
1370826
PLATE

1.166
1470029
CLAMP

4.630
PAD

VIEW A

N. L.
SCREW

4.625
1370951
ARM

4.931
3830660
HOSE (ROLL)

4.650
CYLINDER,
MASTER

4.648
1192733
GASKET

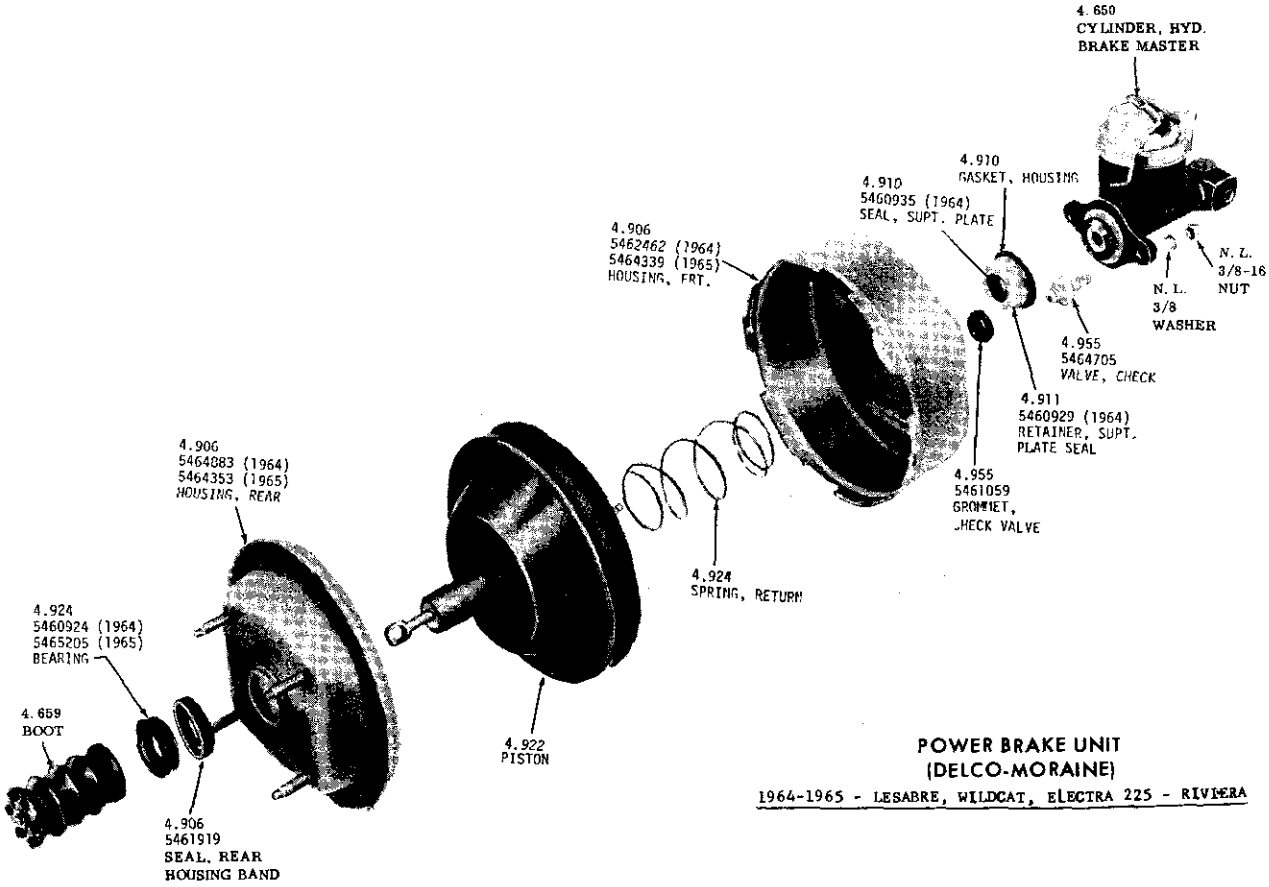

POWER BRAKE UNIT
(DELCO-MORAINE)

1964-1965 - LESABRE, WILDCAT, ELECTRA 225 - RIVIERA

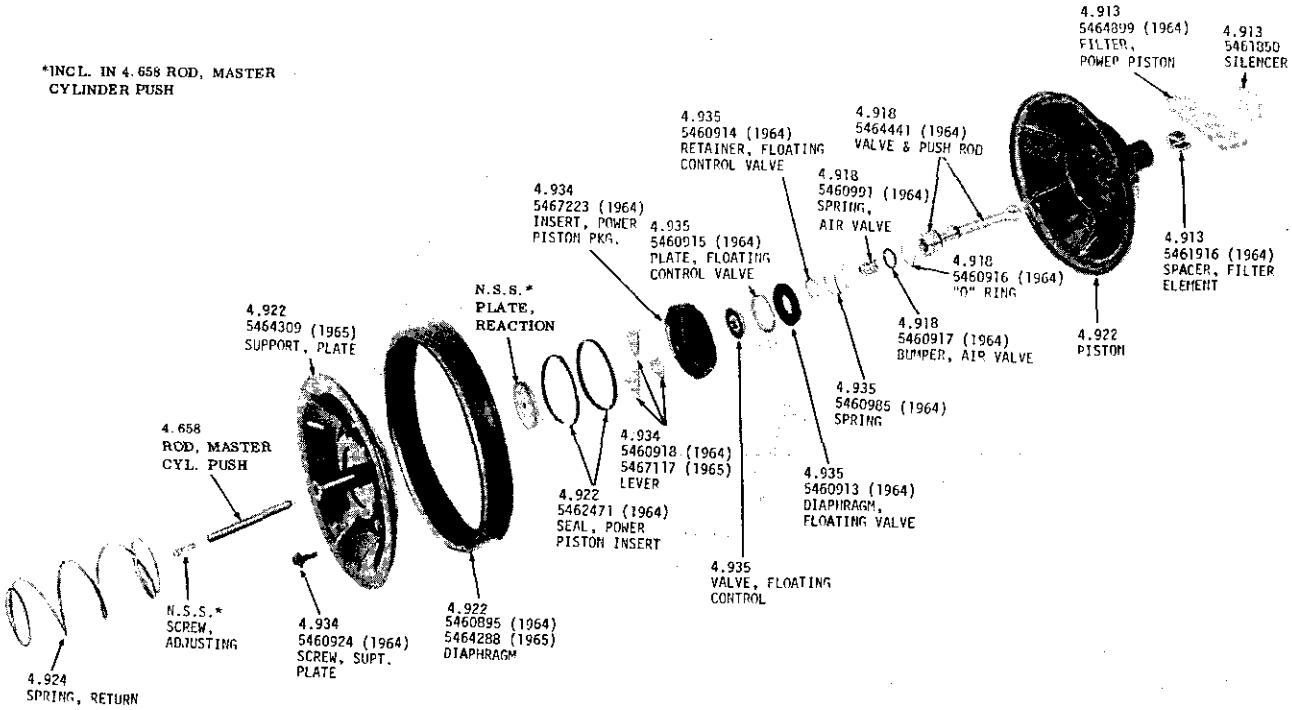

POWER PISTON
(DELCO-MORAINE)
1964-1965 - LESABRE - WILDCAT - ELECTRA 225 - RIVIERA

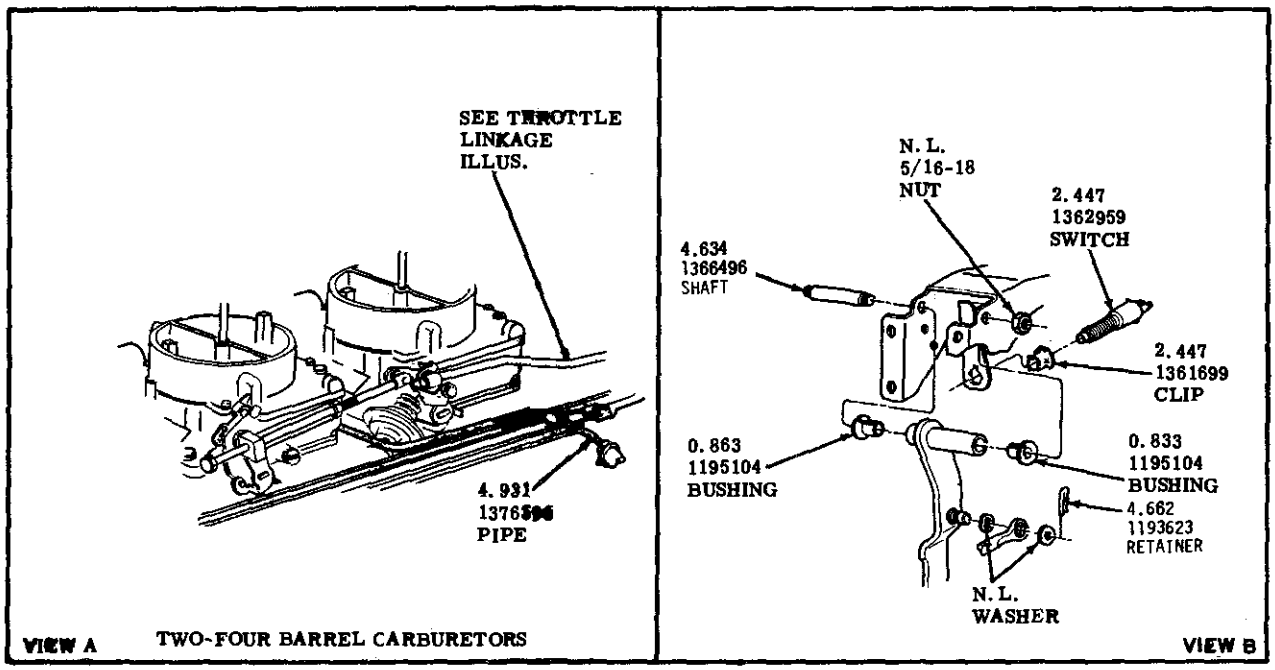

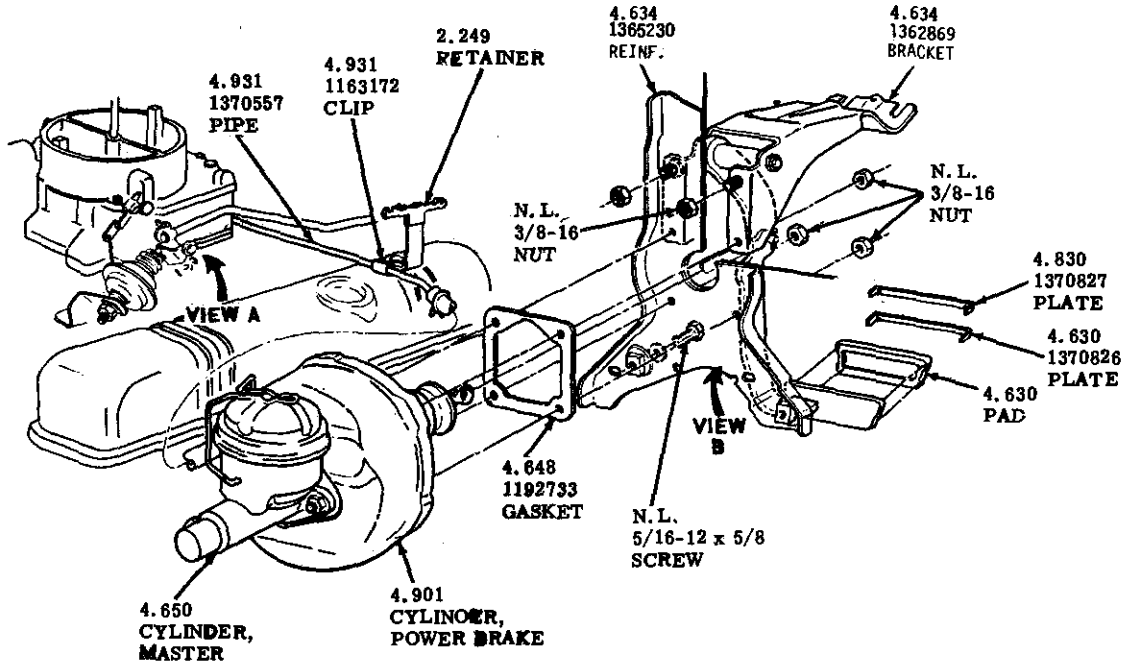

BRAKE PEDAL AND MASTER CYLINDER
1965 - RIVIERA

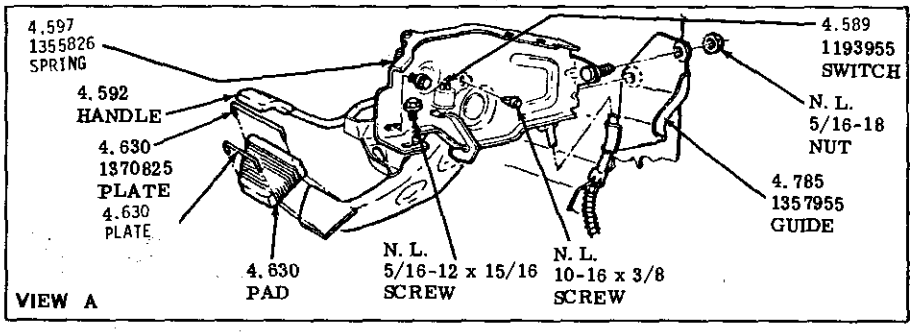

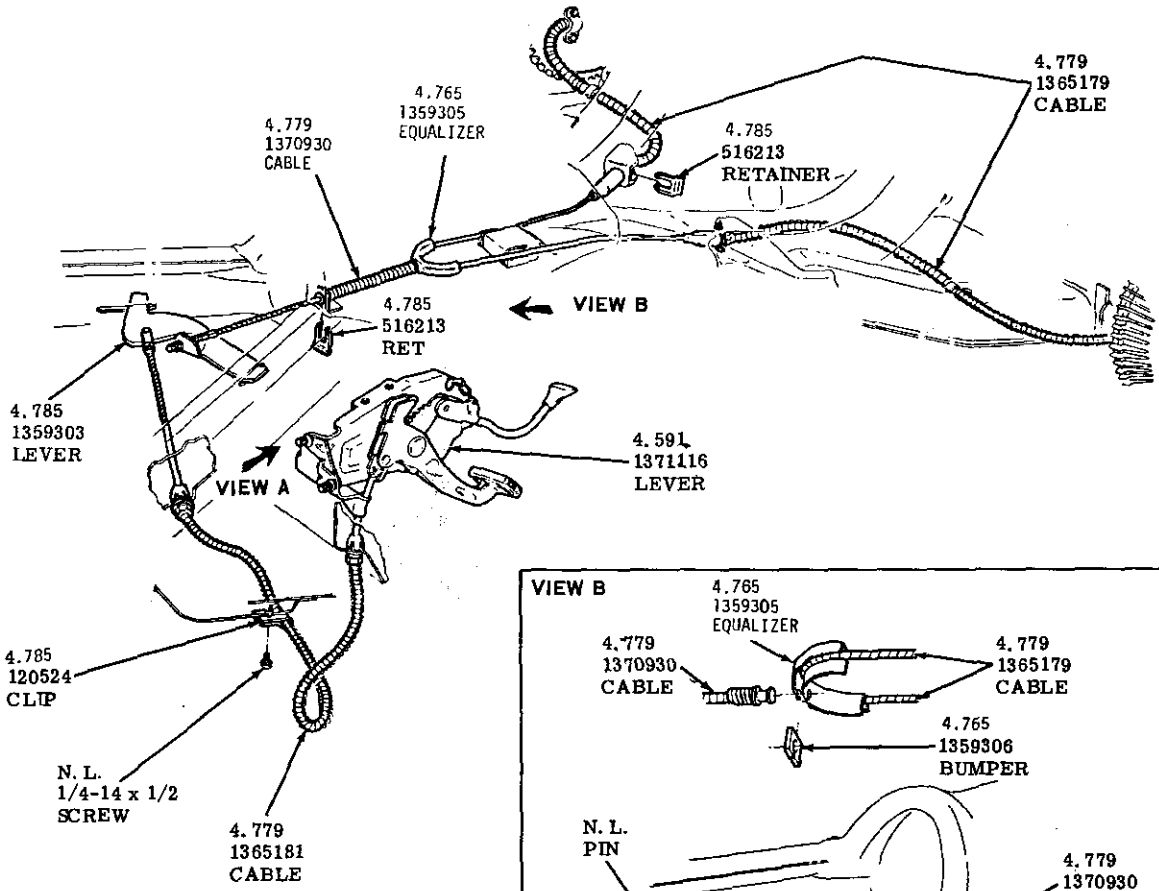

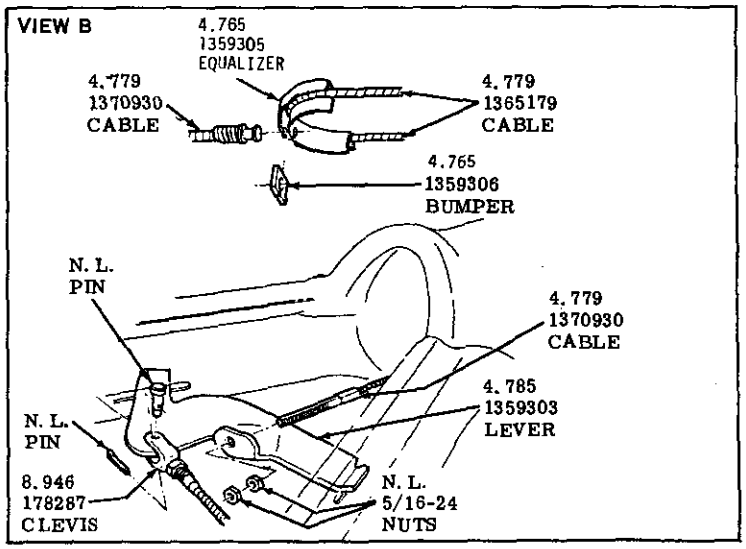

PARKING BRAKE
1965-RIVIERA

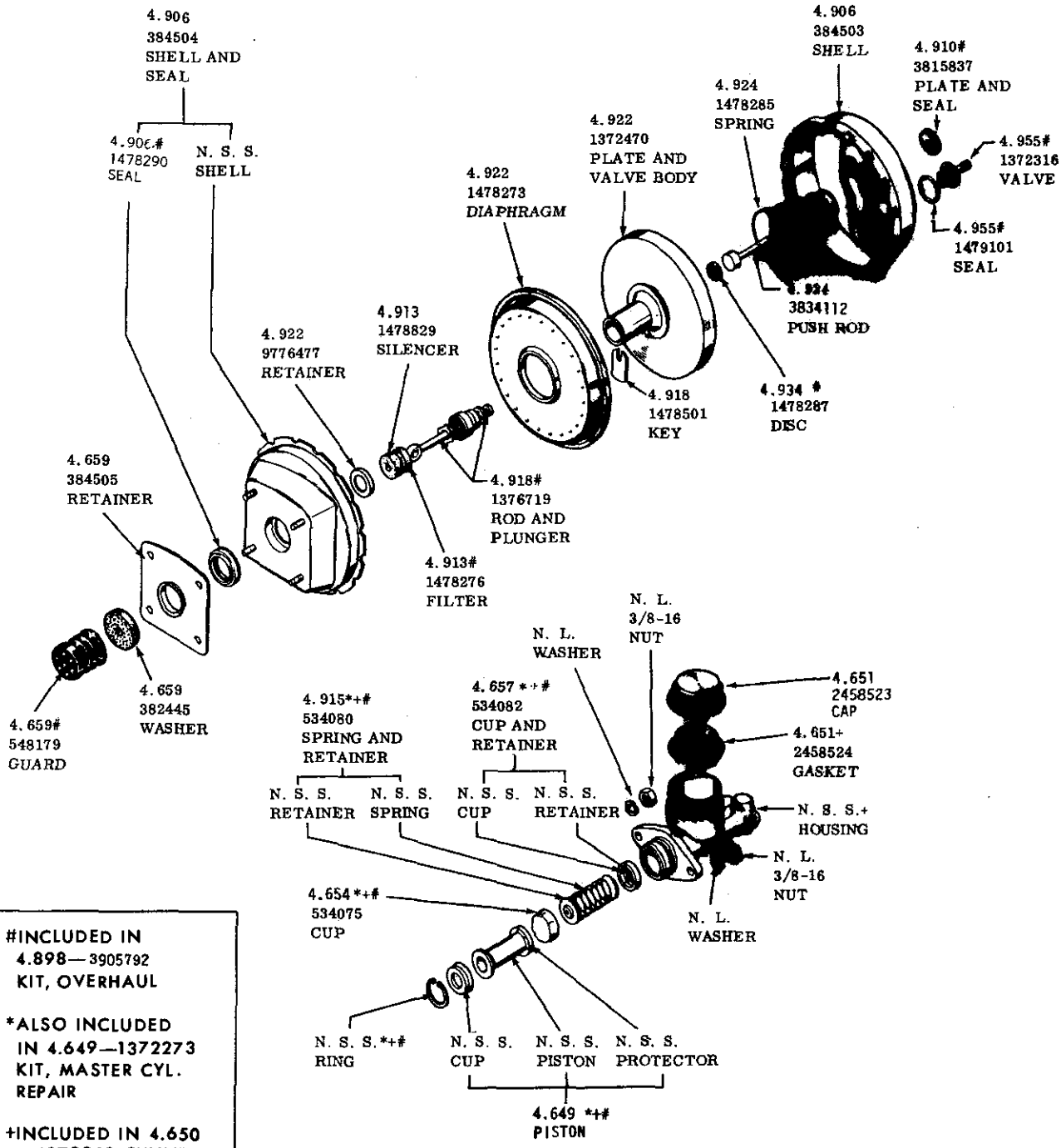

#INCLUDED IN
4.898—3905792
KIT, OVERHAUL

*ALSO INCLUDED
IN 4.649—1372273
KIT, MASTER CYL.
REPAIR

+INCLUDED IN 4.650
—1372263 CYLINDER,
HYD. BRK. MASTER

1966 BENDIX POWER BRAKE
(TYPICAL OF 1965)

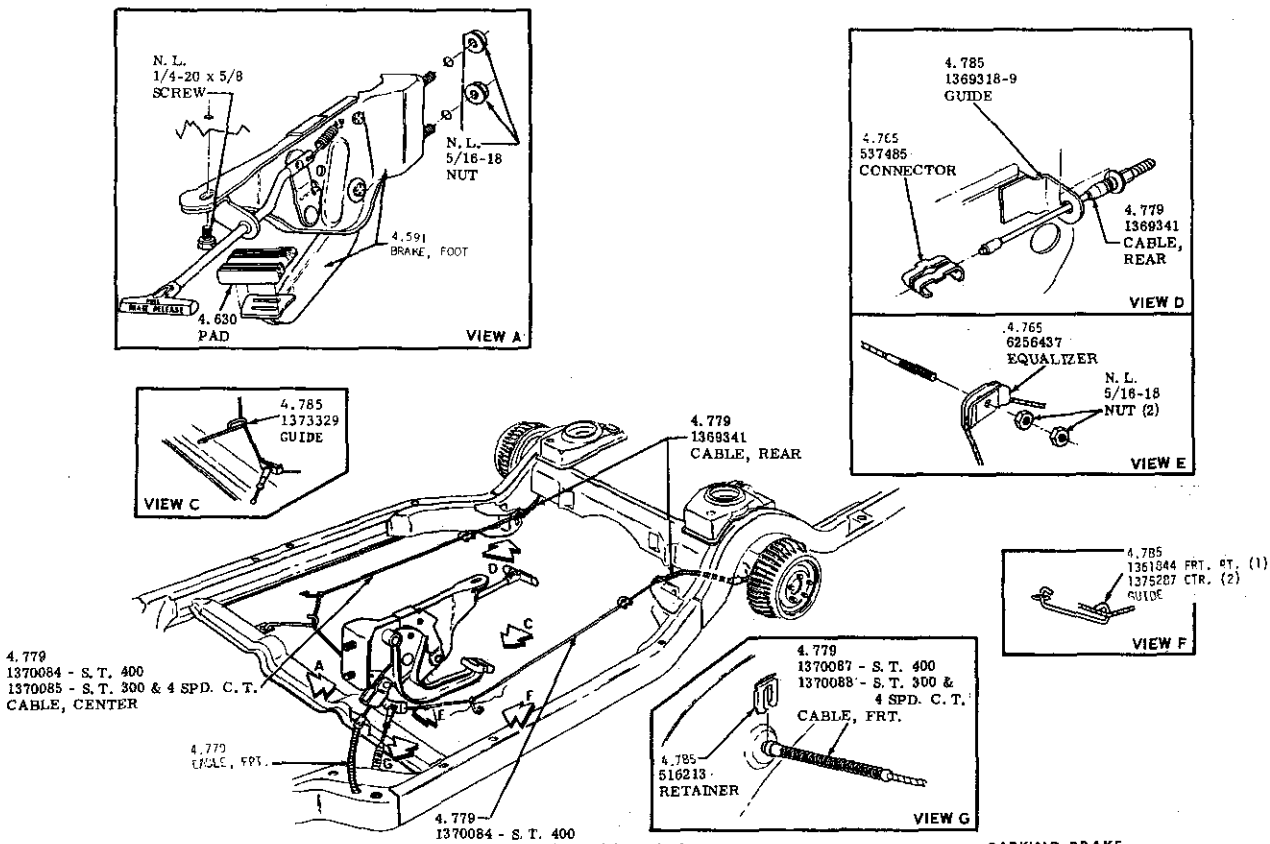

PARKING BRAKE
LESABRE-WILDCAT-ELECTRA 225
1965-1968

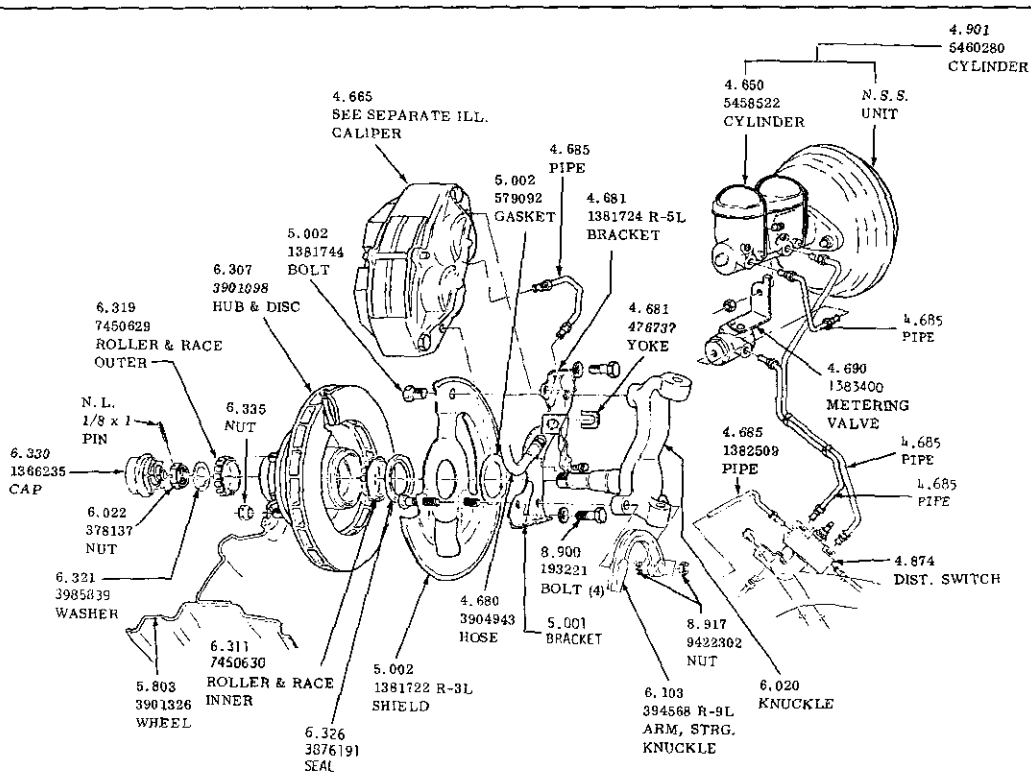

SPECIAL—SKYLARK—G.S.

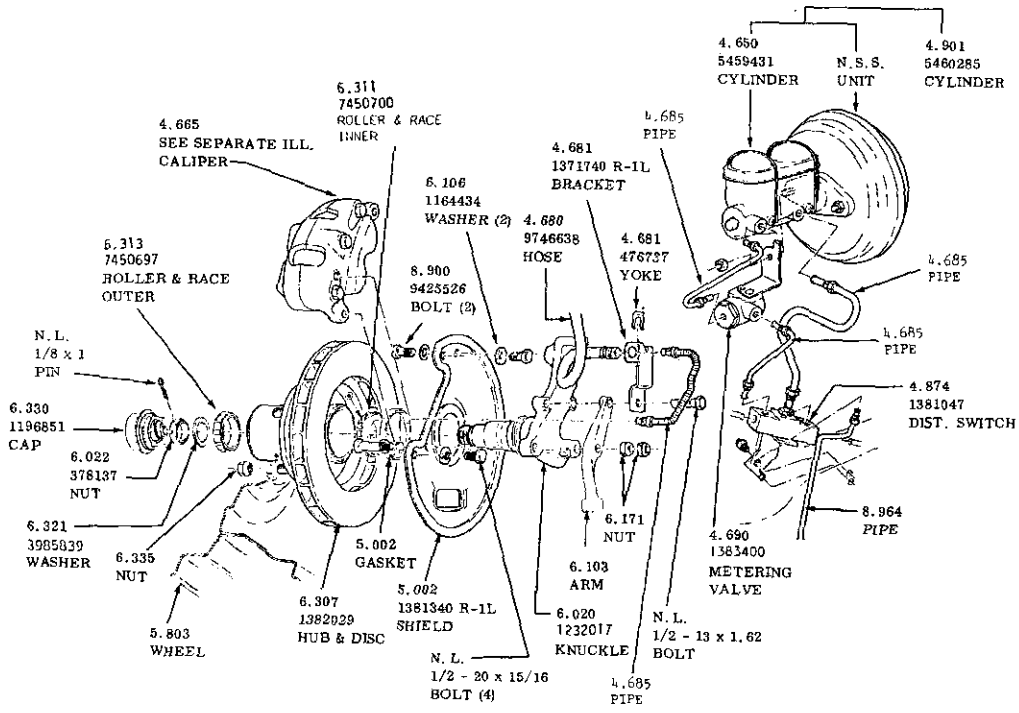

LESABRE—WILDCAT—RIVIERA

DISC BRAKES
1967-1968-ALL

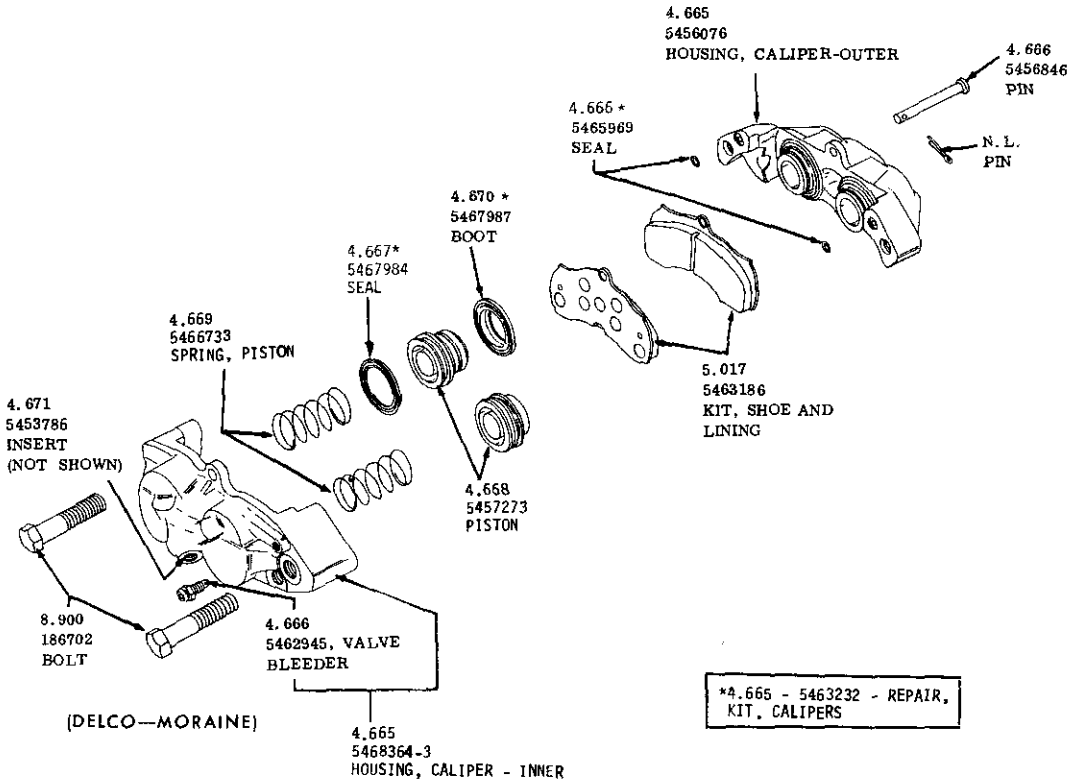

(DELCO—MORAINE)

*4.665 - 5463232 - REPAIR, KIT, CALIPERS

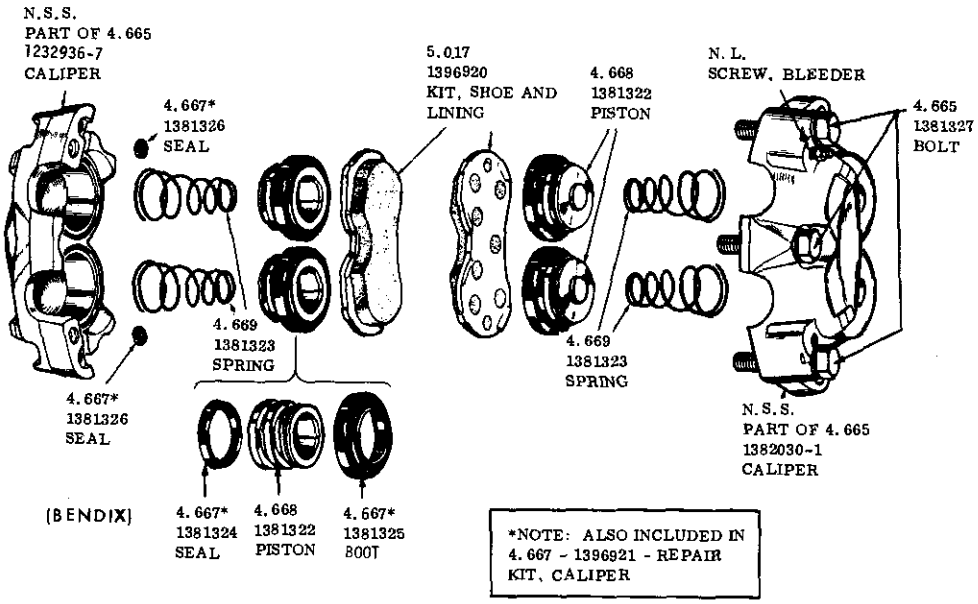

(BENDIX)

*NOTE: ALSO INCLUDED IN 4.667 - 1396921 - REPAIR KIT, CALIPER

POWER DISC. BRAKE CALIPERS
1967-1968-ALL
1969-ALL EXC. 30-4000

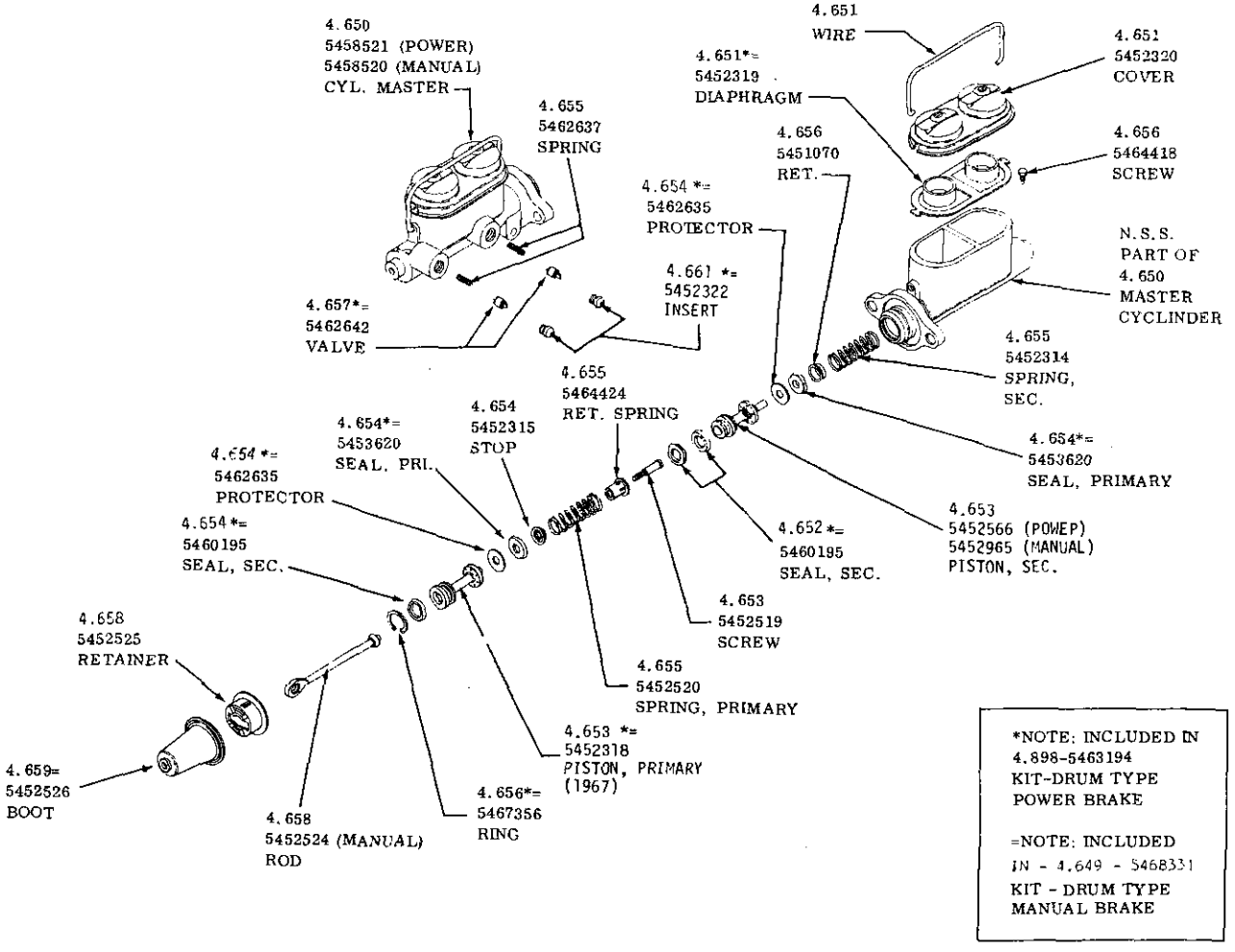

HYDRAULIC BRAKE MASTER CYLINDER

1967-1972 —50—60—8000—9000 (DRUM TYPE)

DELCO—MORAINE

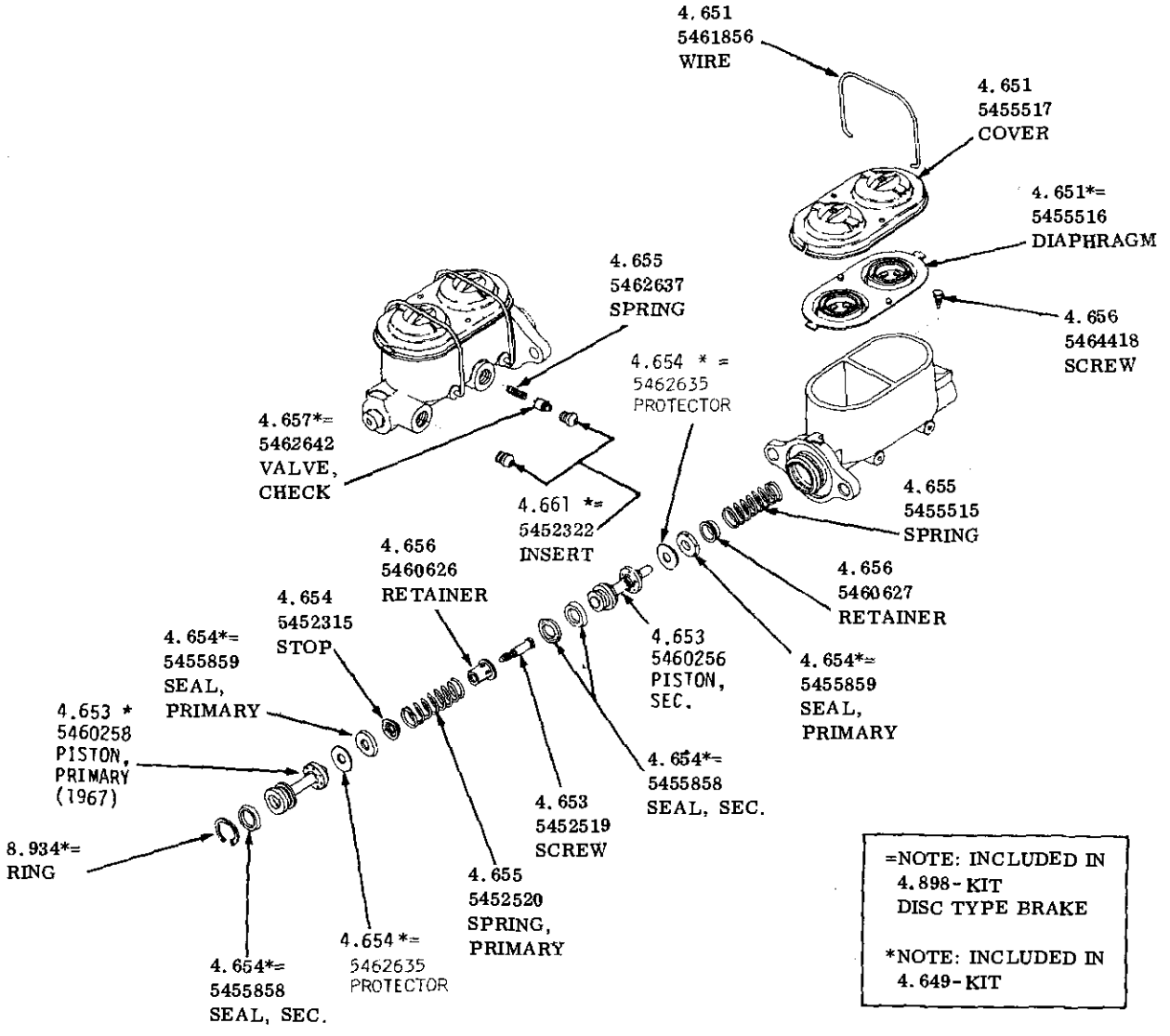

HYDRAULIC BRAKE MASTER CYLINDER

1967-1972—50-60-80-9000 (DISC. BRAKES)

DELCO—MORAINE)

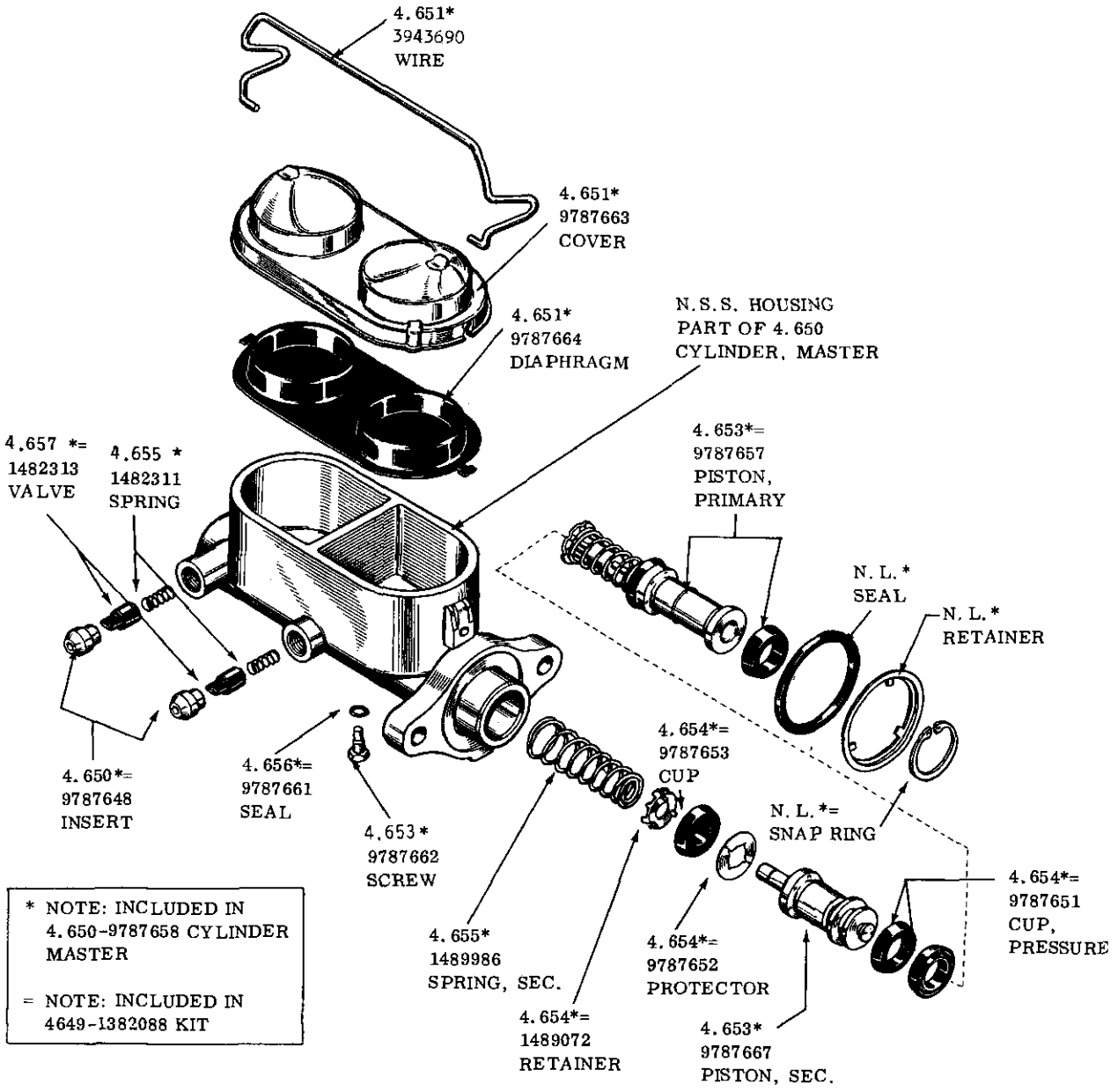

HYDRAULIC BRAKE MASTER CYLINDER
1966-1970 50-60-80-9000
BENDIX DRUM TYPE

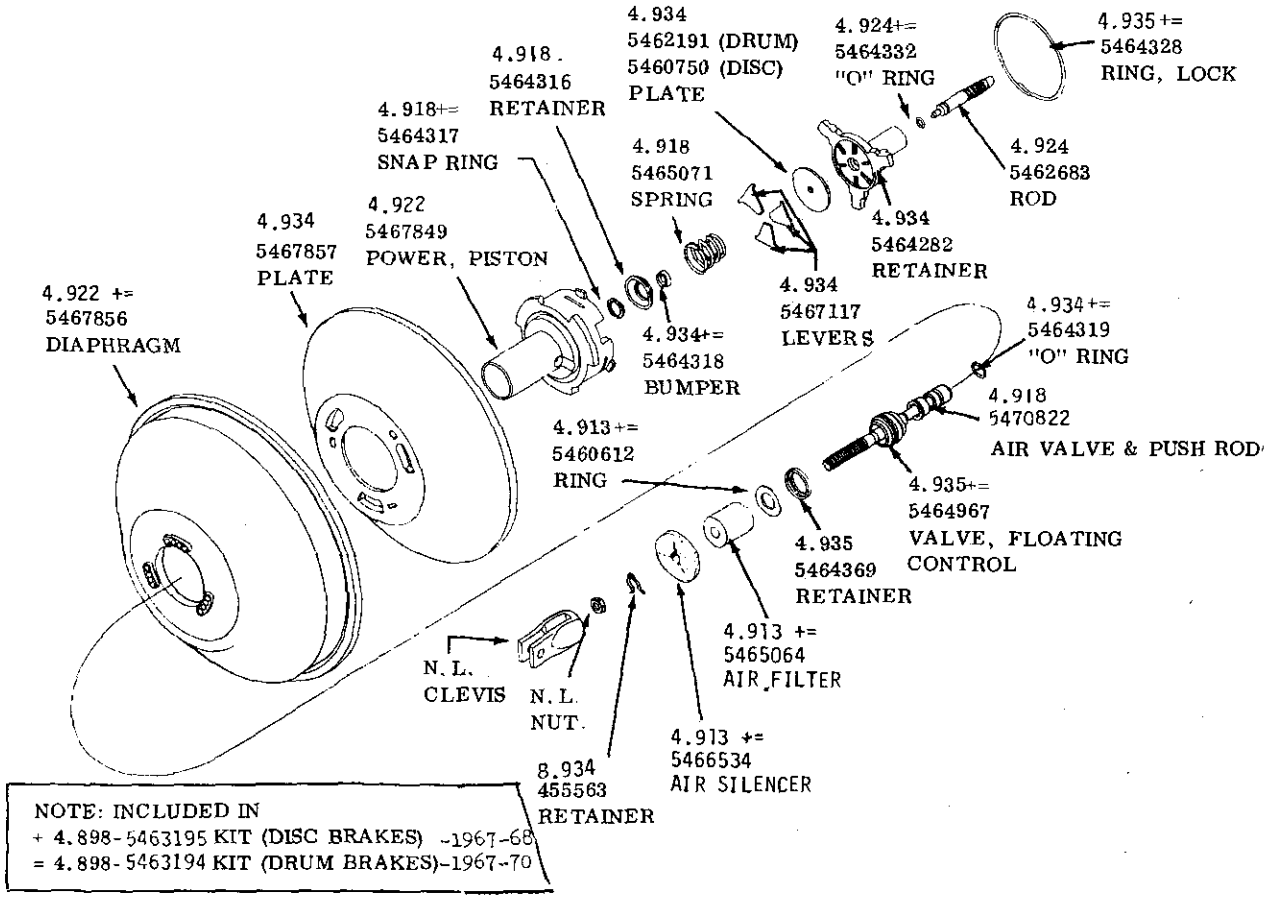

NOTE: INCLUDED IN
+ 4.898-5463195 KIT (DISC BRAKES) -1967-68
= 4.898-5463194 KIT (DRUM BRAKES)-1967-70

POWER PISTON

1967-1972 ALL POWER DISC. BRAKE

(DELCO—MORAINE)

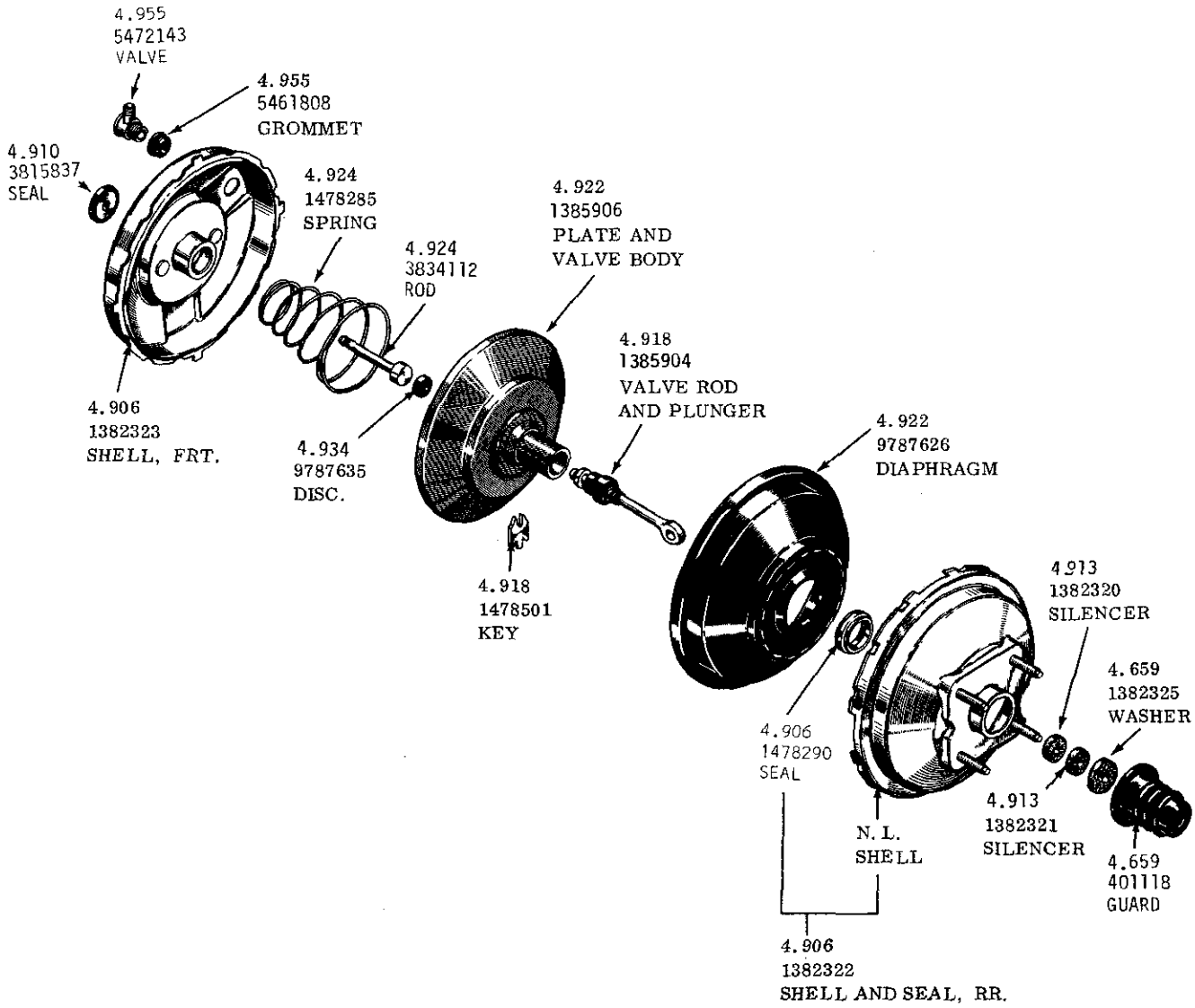

POWER PISTON
1967-1970 50-60-80-9000
BENDIX

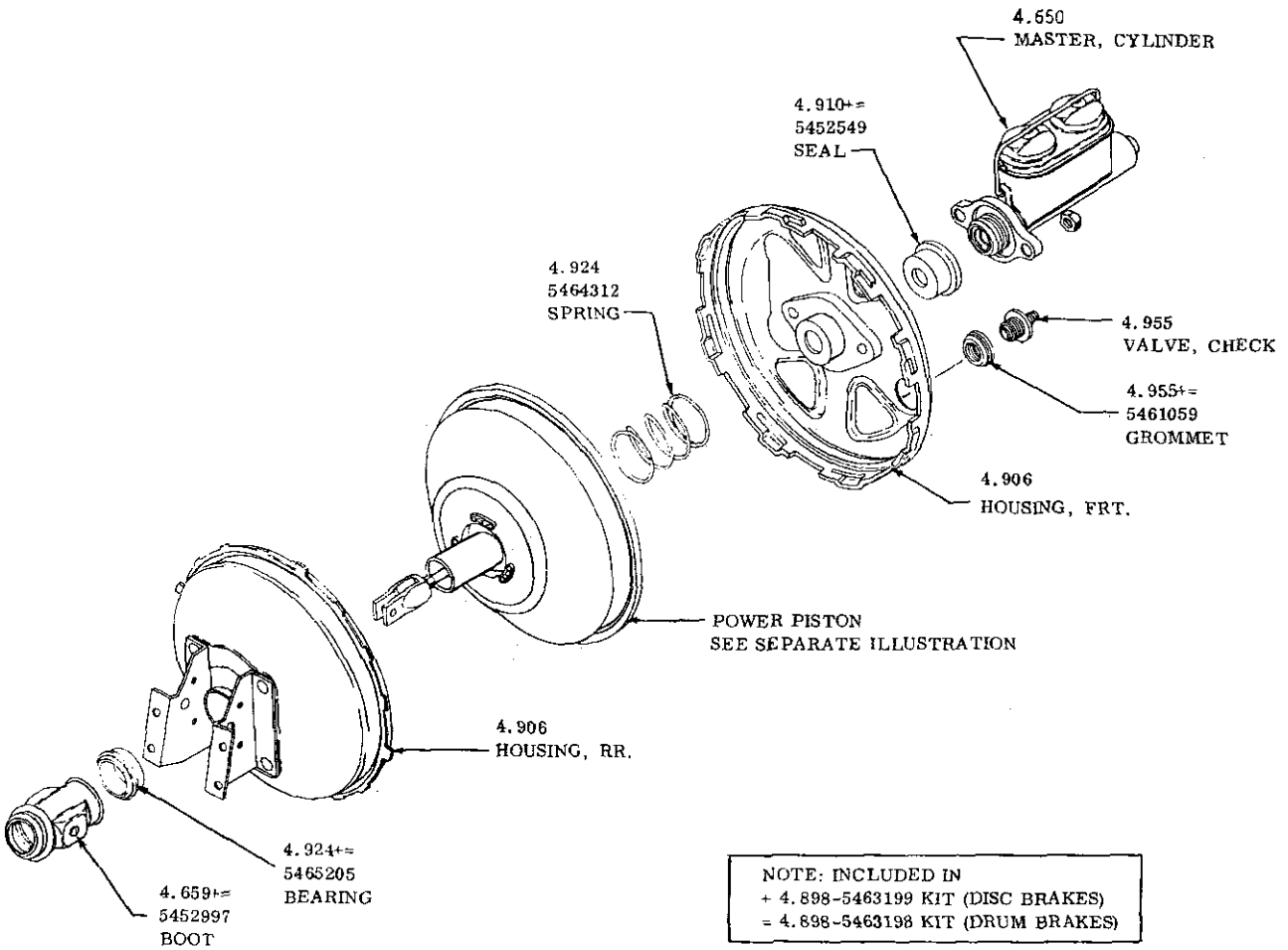

POWER BRAKE UNIT

1967- 1972—30—4000 (DELCO—MORAINE)

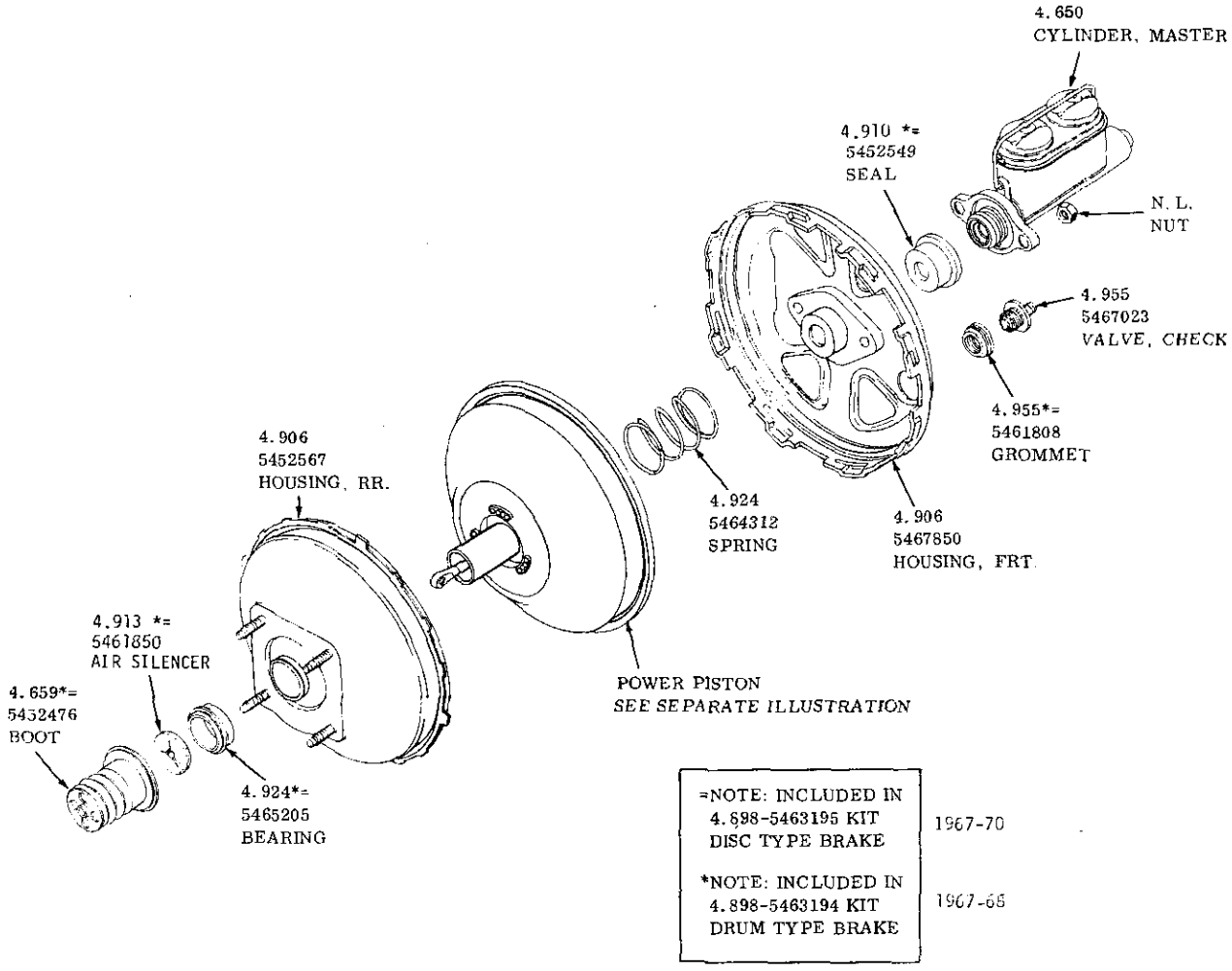

=NOTE: INCLUDED IN 4.898-5463195 KIT DISC TYPE BRAKE	1967-70
*NOTE: INCLUDED IN 4.898-5463194 KIT DRUM TYPE BRAKE	1967-68

POWER BRAKE UNIT (DELCO—MORAINE)

1967-1972 50-60-80-9000

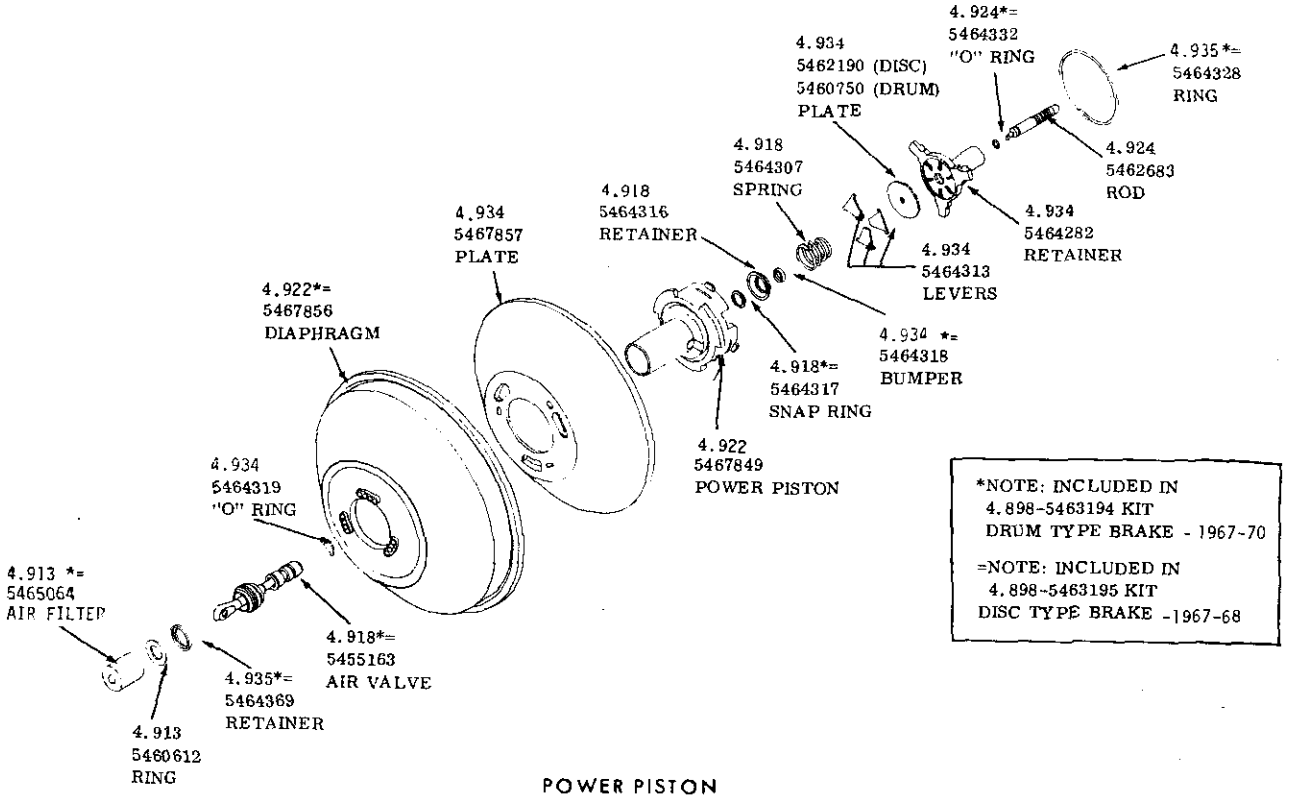

POWER PISTON
1967-1972—50—60—80—9000
(DELCO—MORAINE)

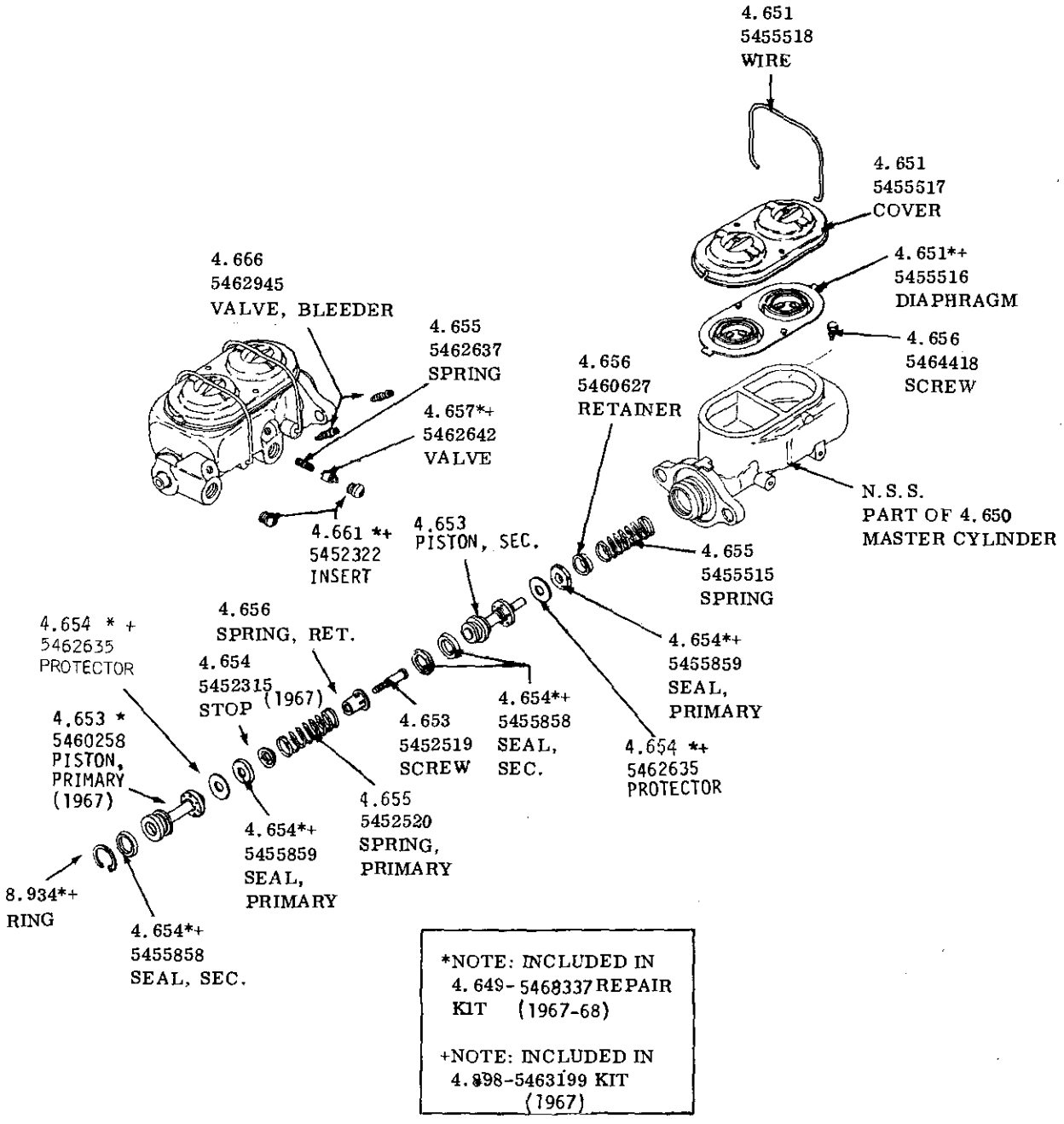

*NOTE: INCLUDED IN 4.649-5468337 REPAIR KIT (1967-68)

+NOTE: INCLUDED IN 4.898-5463199 KIT (1967)

HYDRAULIC BRAKE MASTER CYLINDER
1967-1972 —30—4000 POWER DISC. BRAKE
(DELCO—MORAINE)

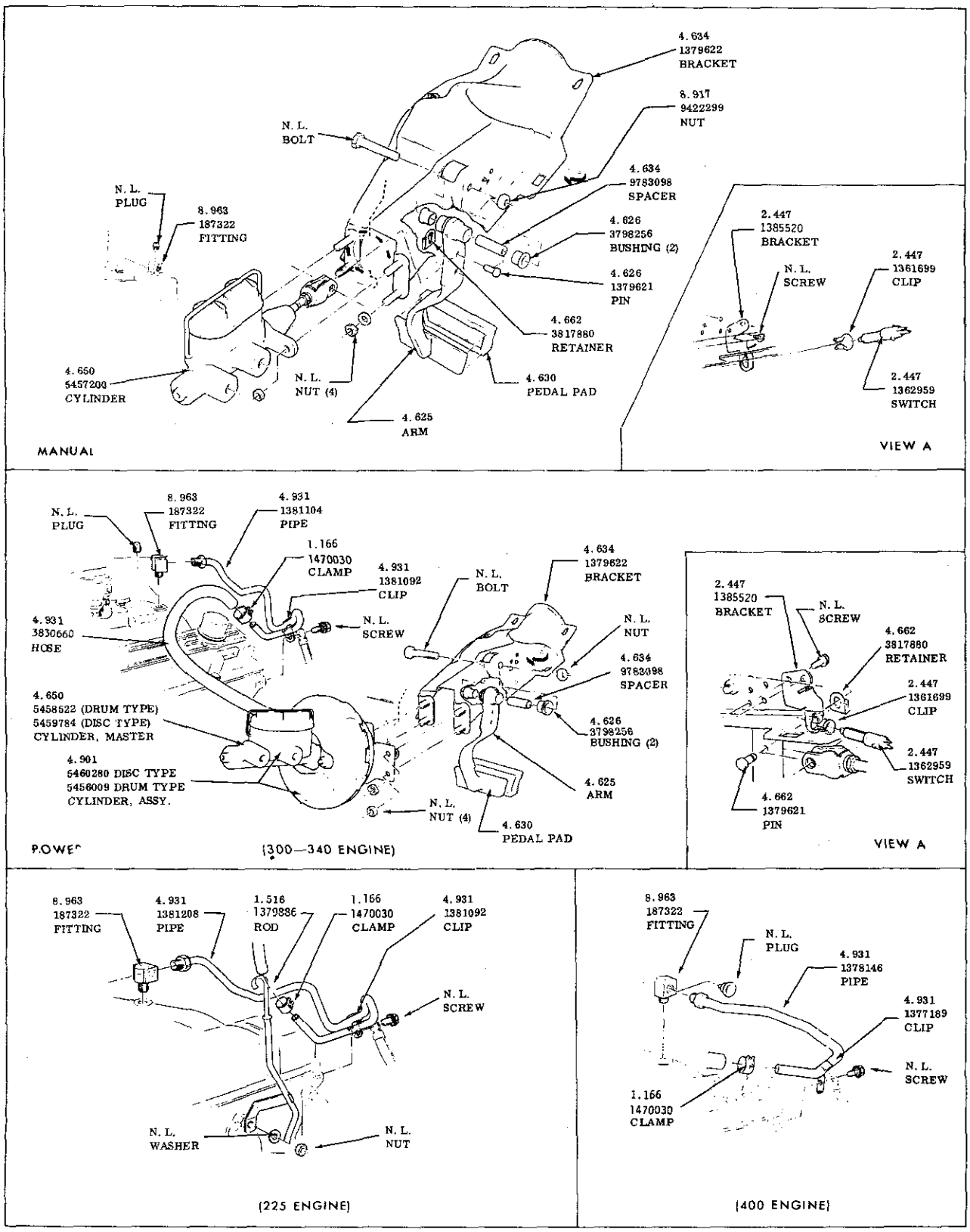

BRAKE PEDAL AND MASTER CYLINDER
1967—SPECIAL—SKYLARK—SKYLARK G.S.

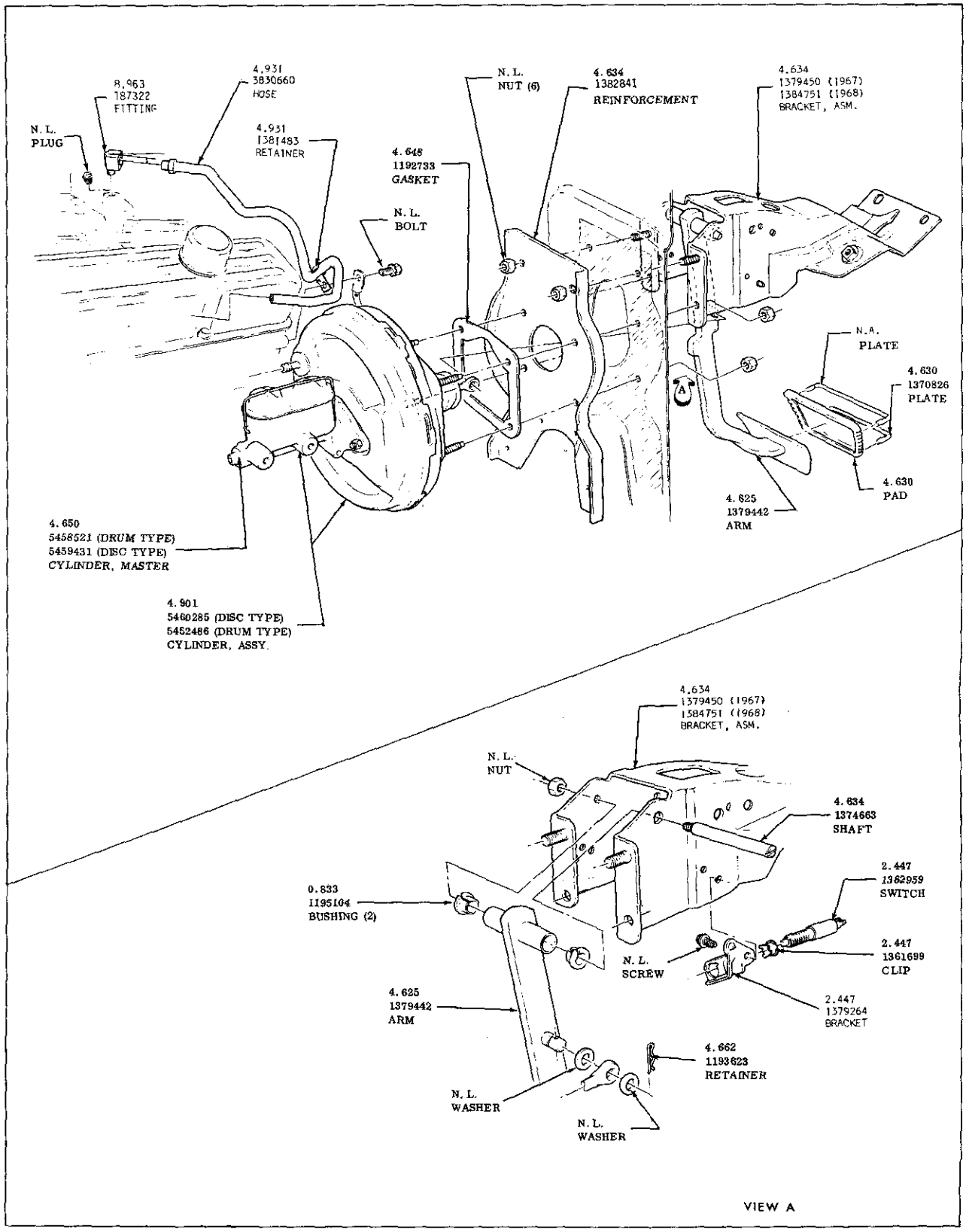

BRAKE PEDAL AND MASTER CYLINDER—POWER BRAKES

1967-1968 —LE SABRE—WILDCAT—ELECTRA 225

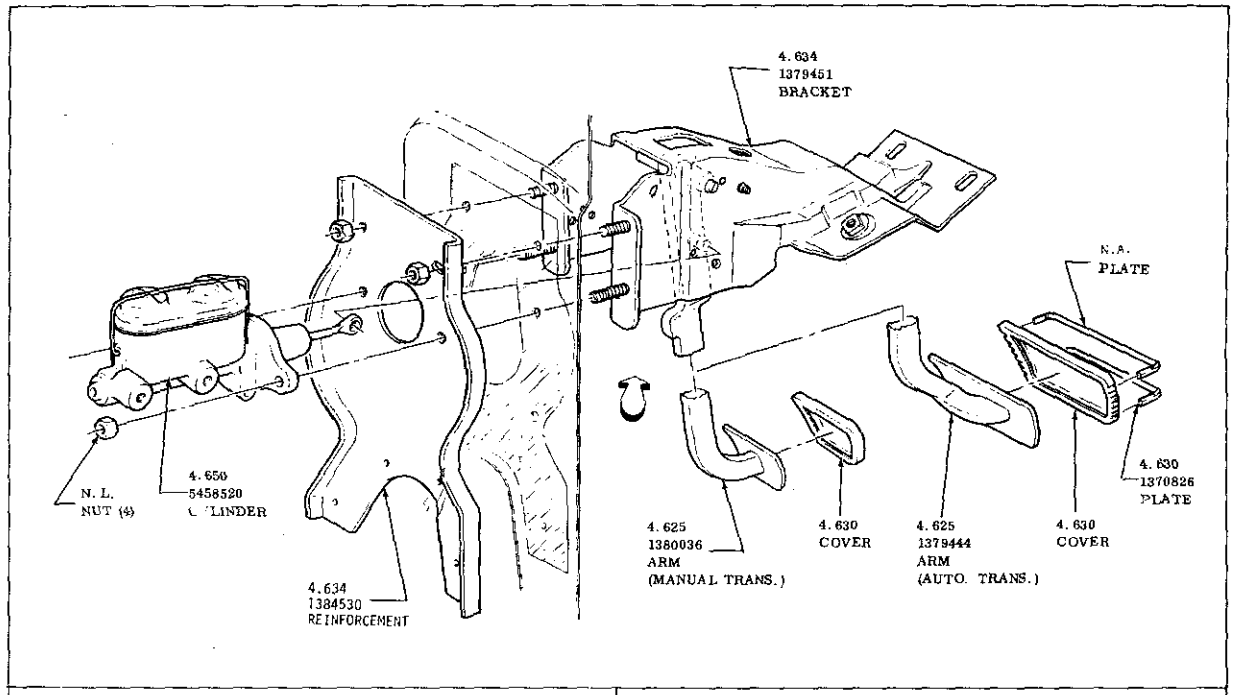

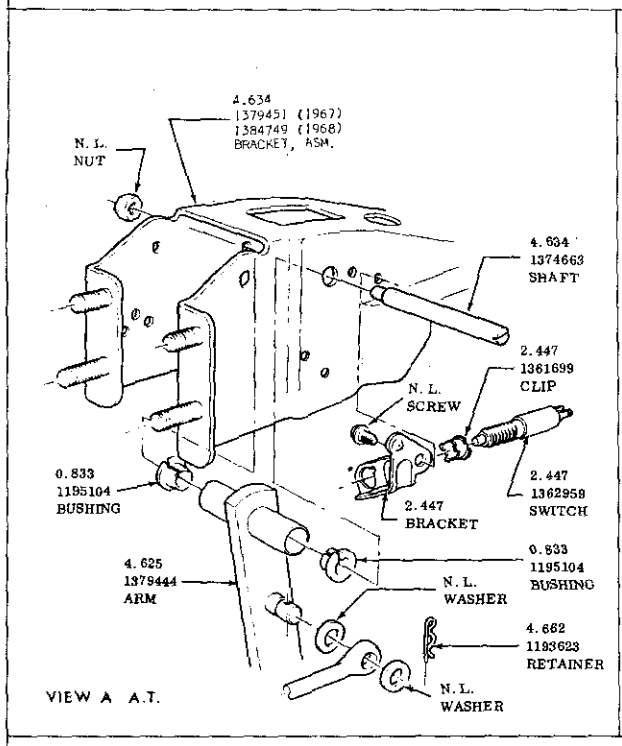

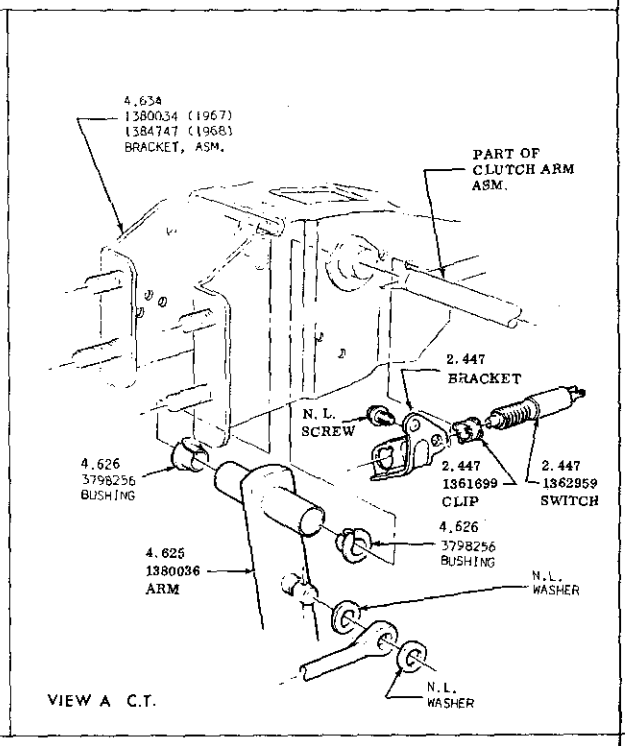

BRAKE PEDAL AND MASTER CYLINDER—MANUAL BRAKES

1967-1968 —LE SABRE—WILDCAT

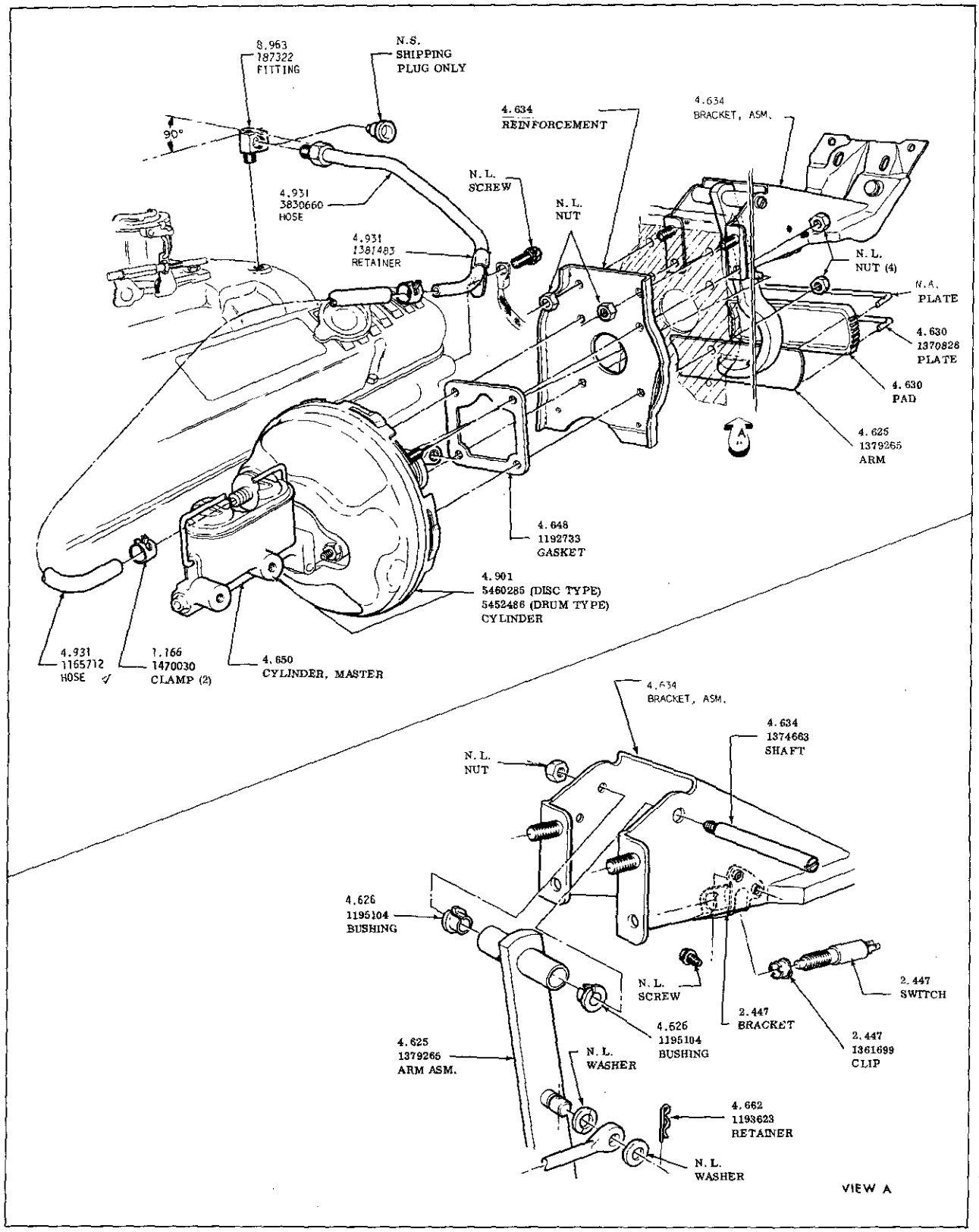

BRAKE PEDAL AND MASTER CYLINDER

1967-1970 —RIVIERA

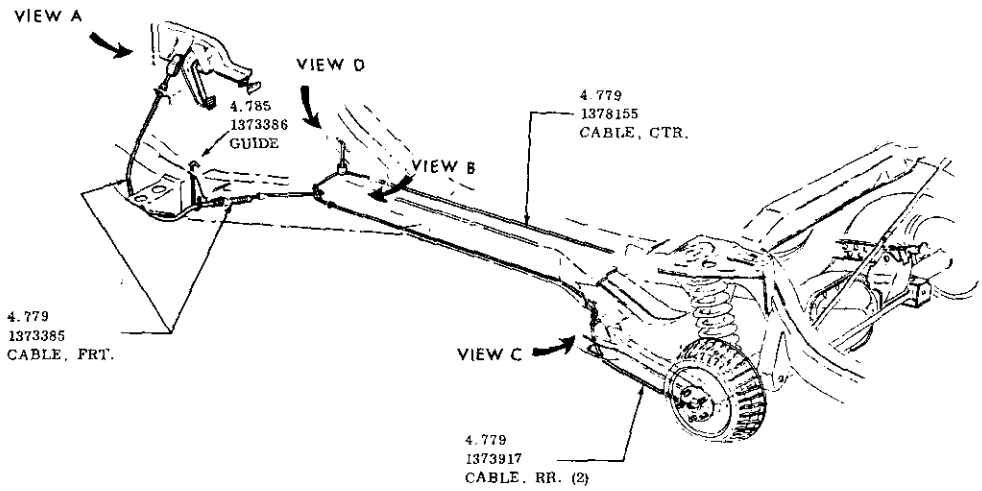

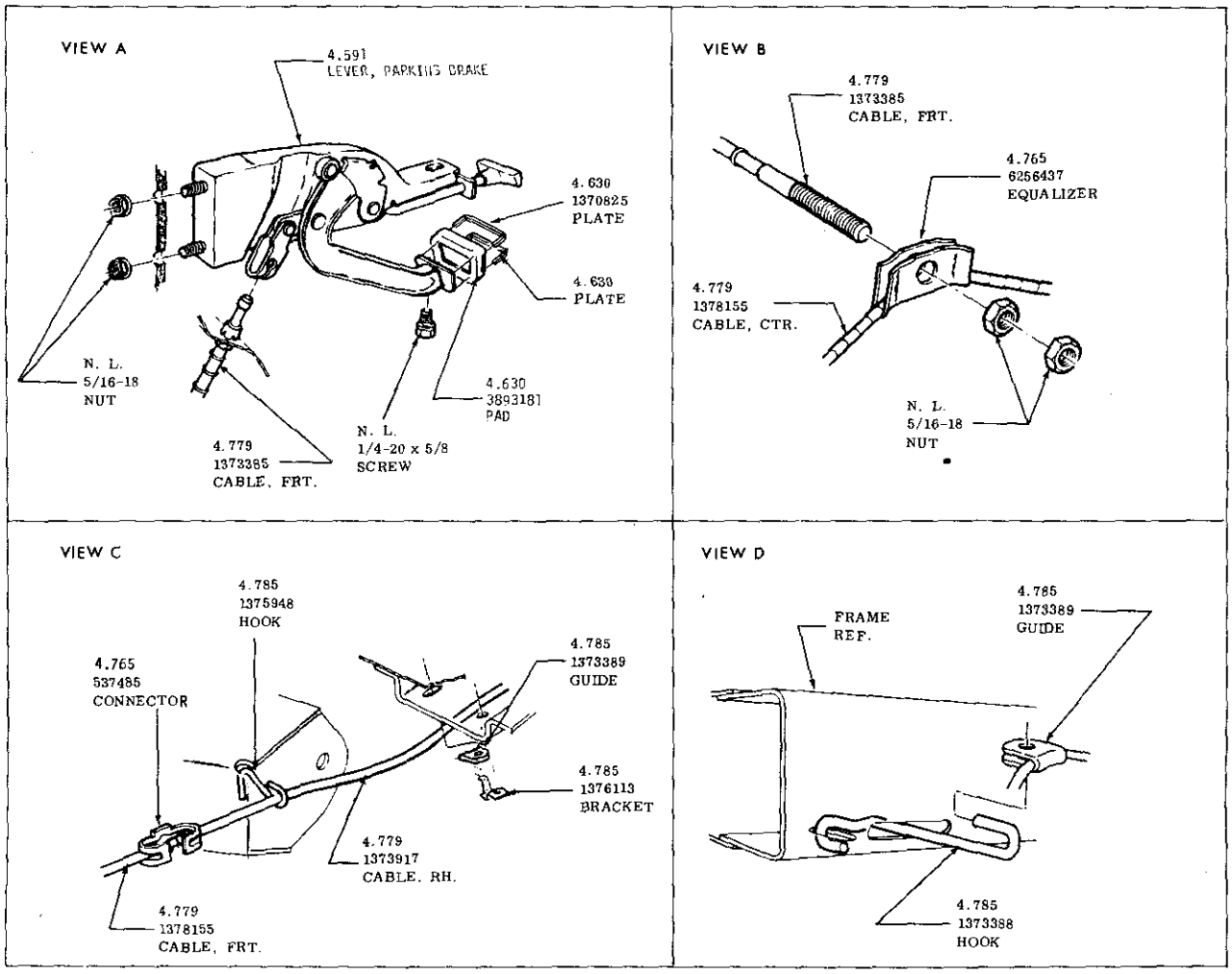

PARKING BRAKE
1966-1968 —RIVIERA

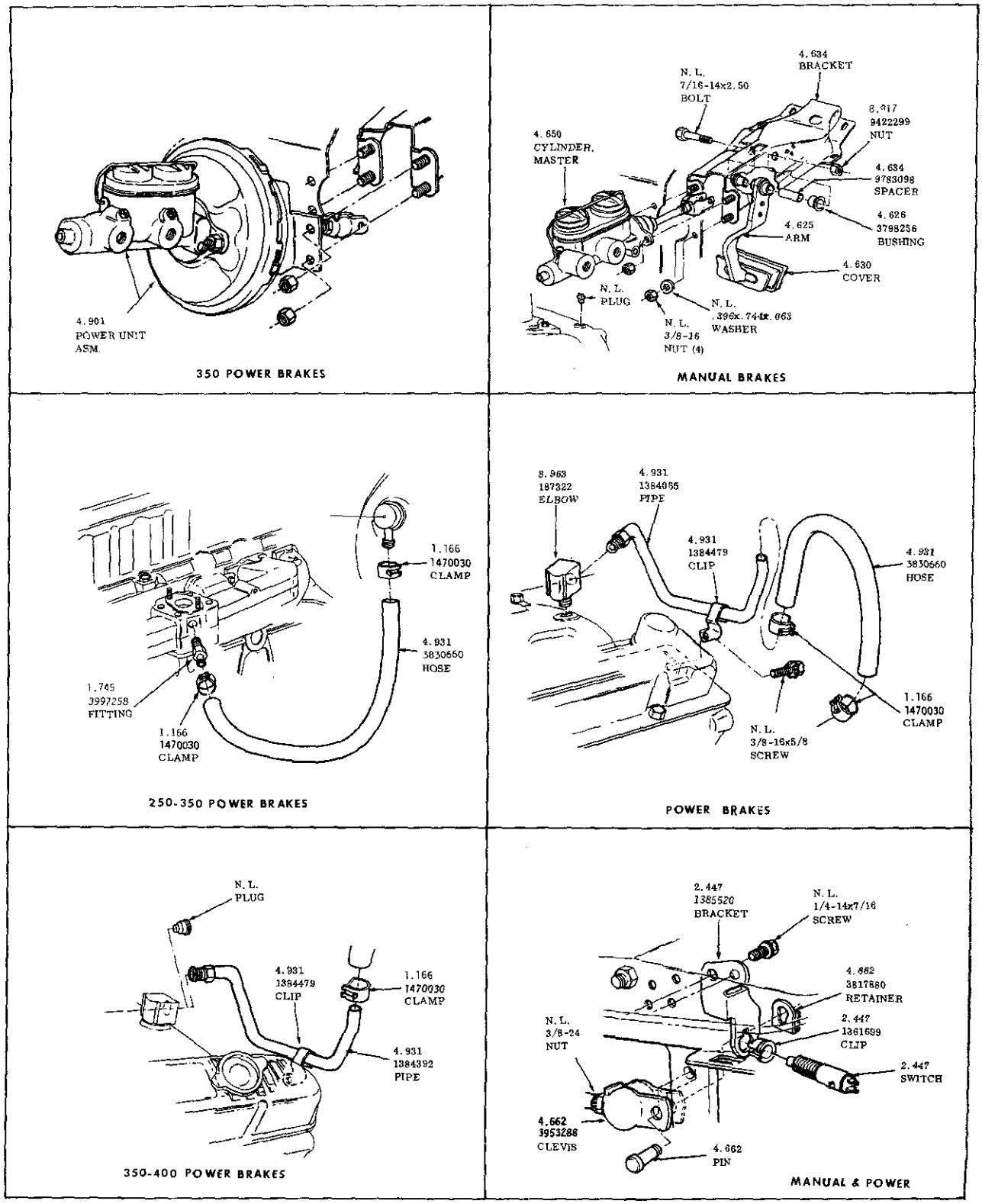

BRAKE PEDAL & MASTER CYLINDER
196B-1970 - 30-4000

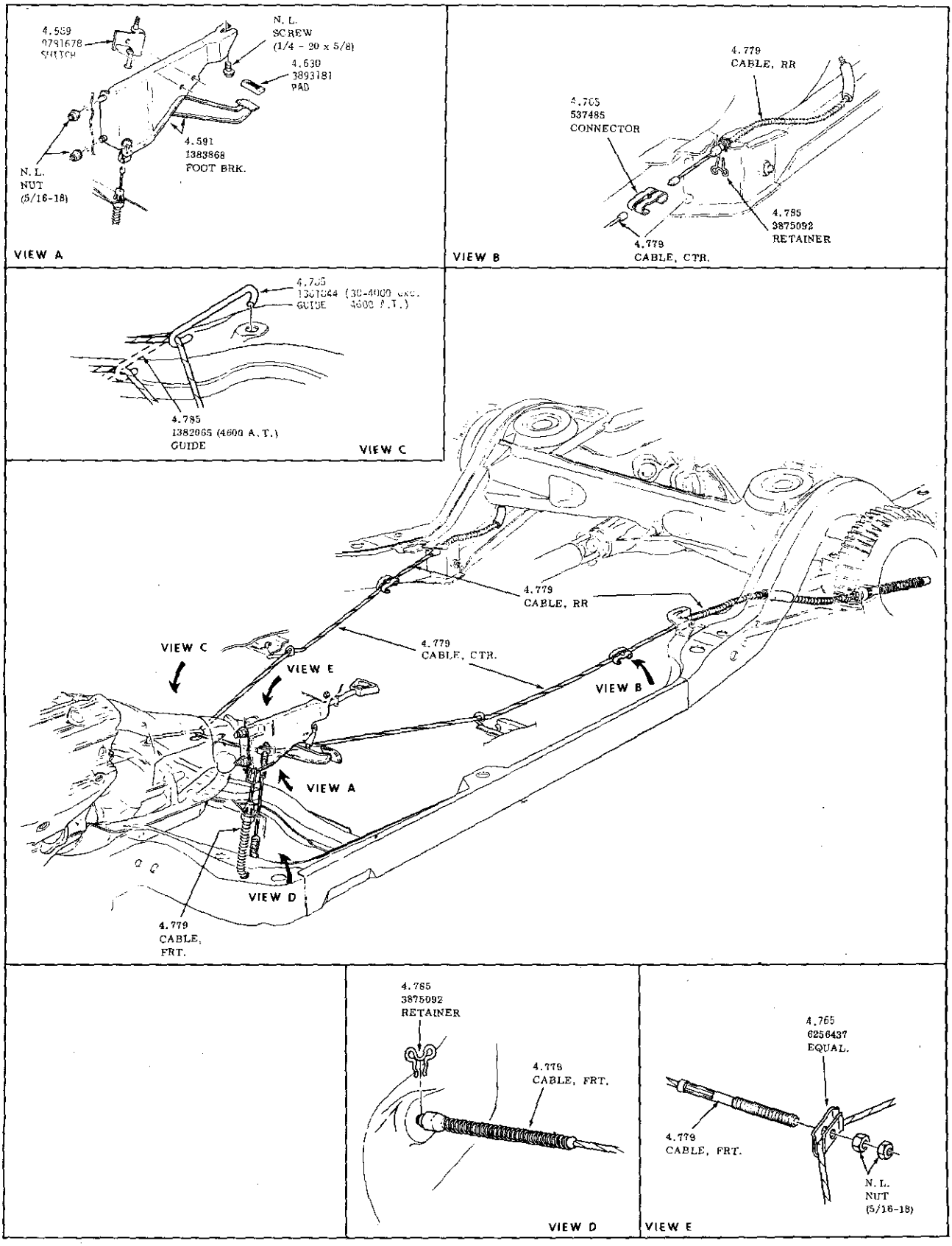

PARKING BRAKE
1968-1970 -30-4000

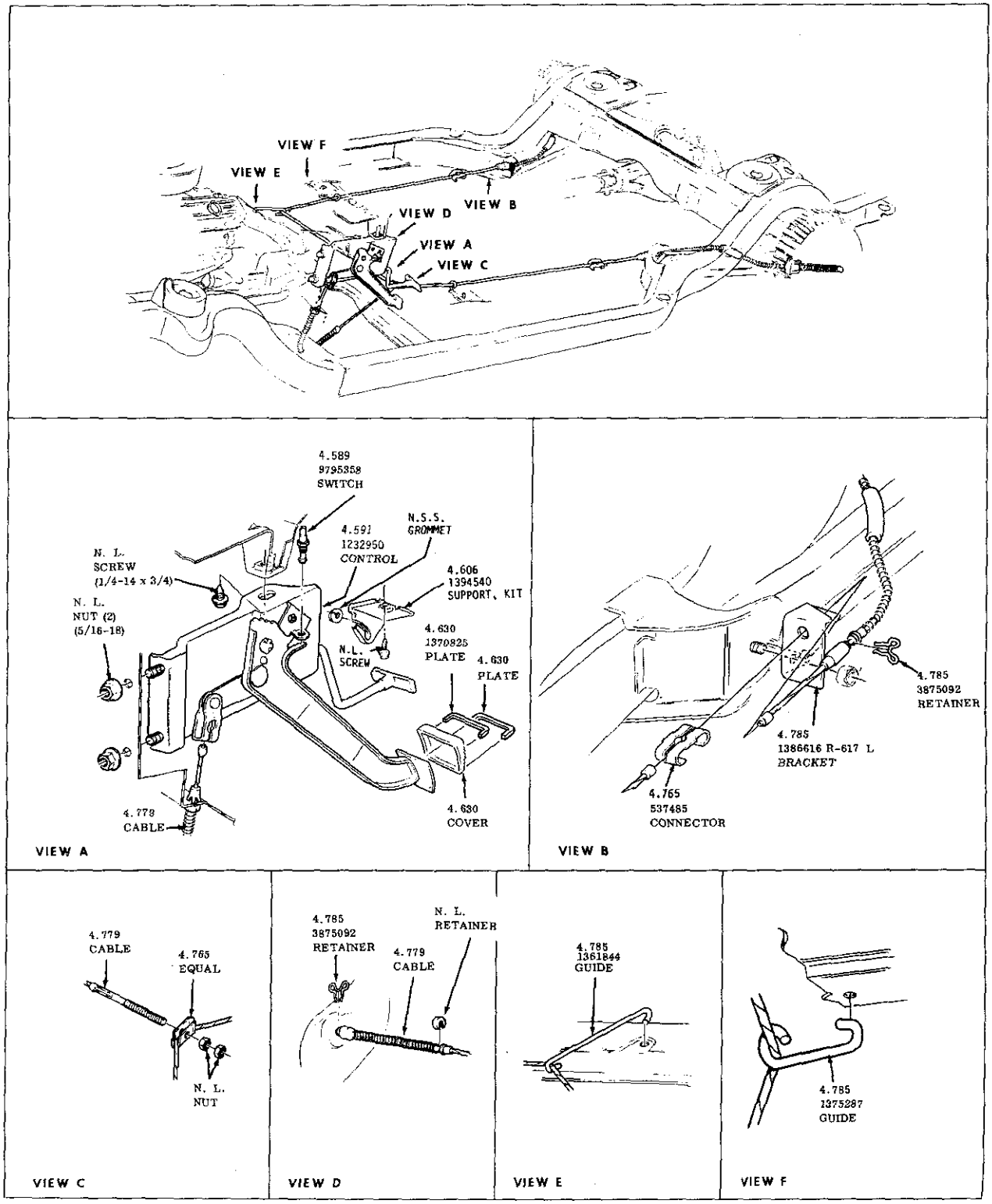

PARKING BRAKE
1969-50-60-8000

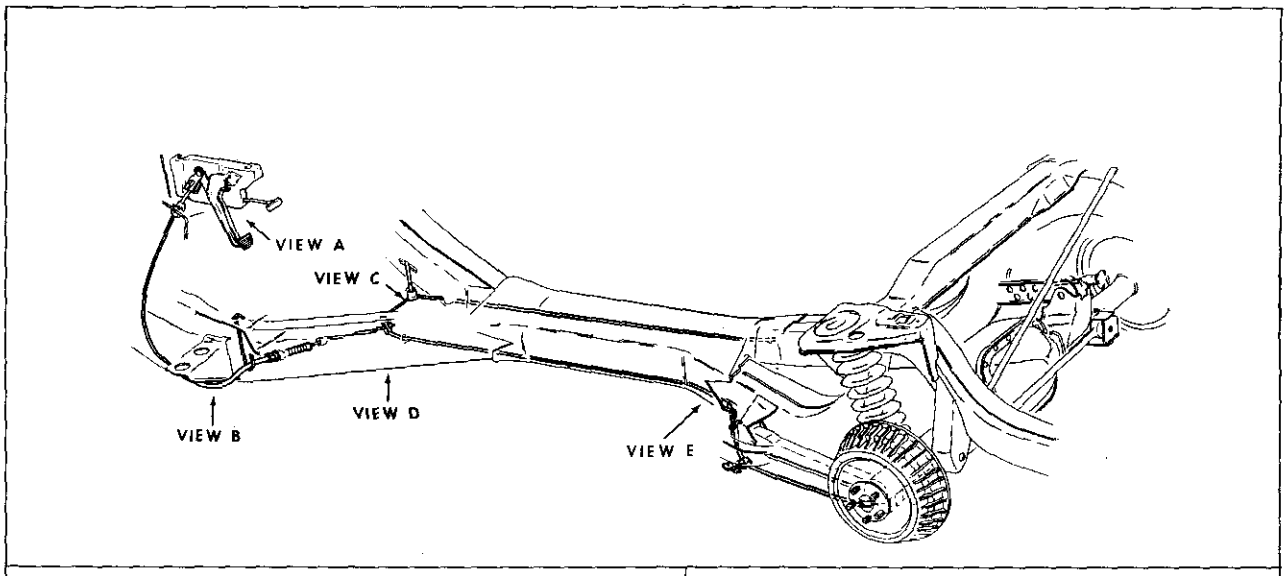

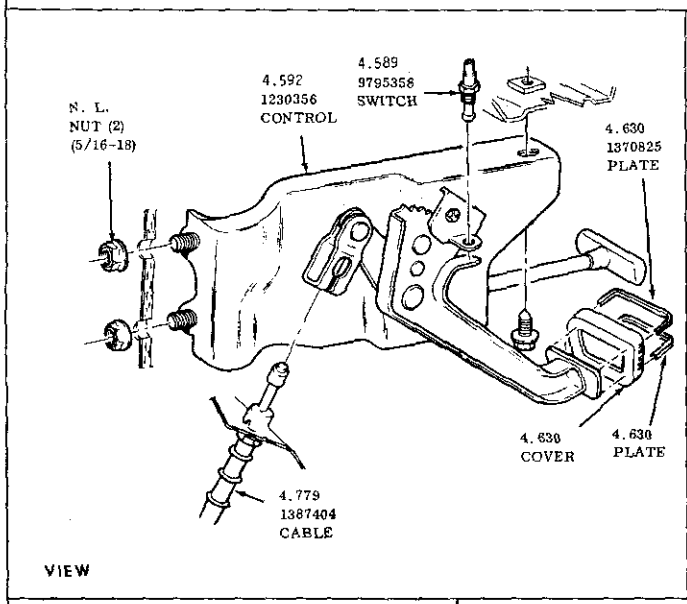

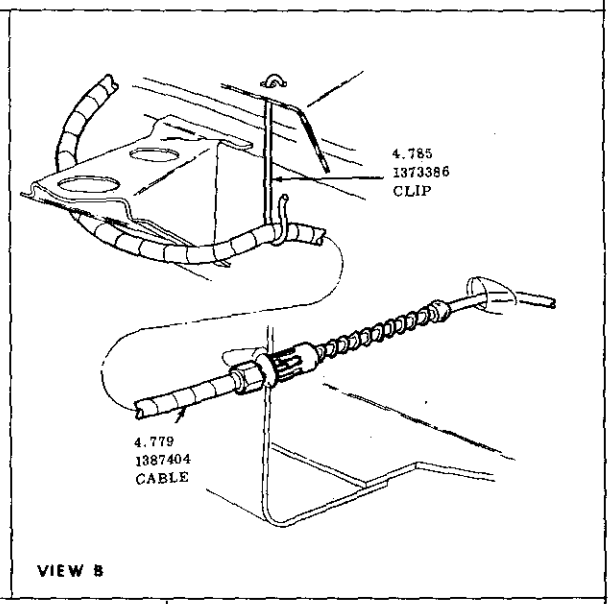

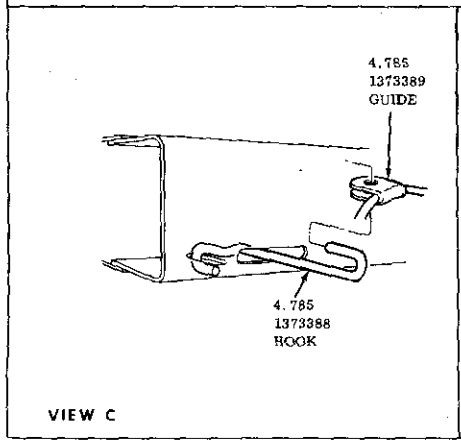

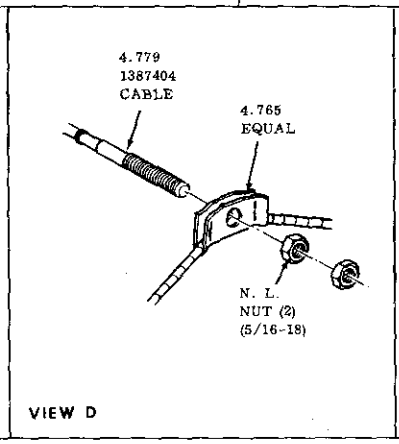

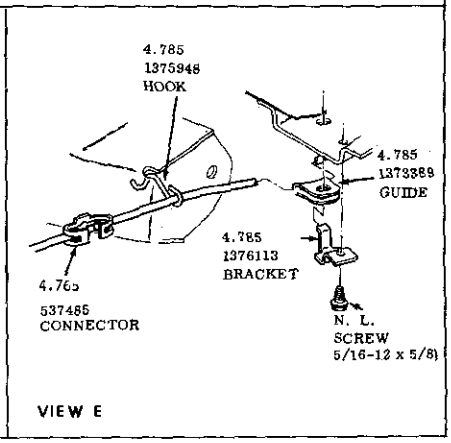

PARKING BRAKE
1969-RIVIERA

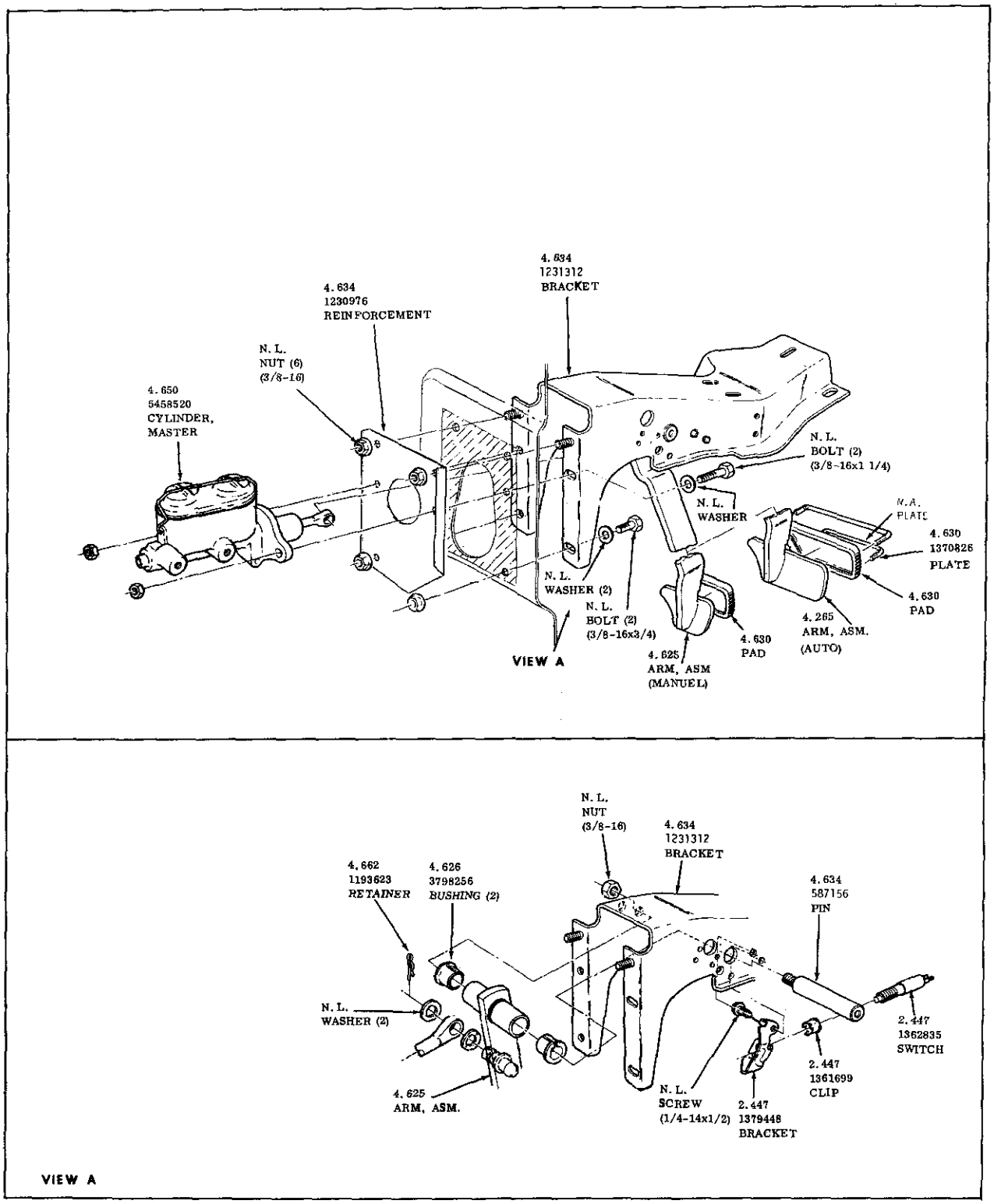

BRAKE PEDAL & MASTER CYLINDER (MANUAL BRAKE)
1969-1970 - LE SABRE - WILDCAT

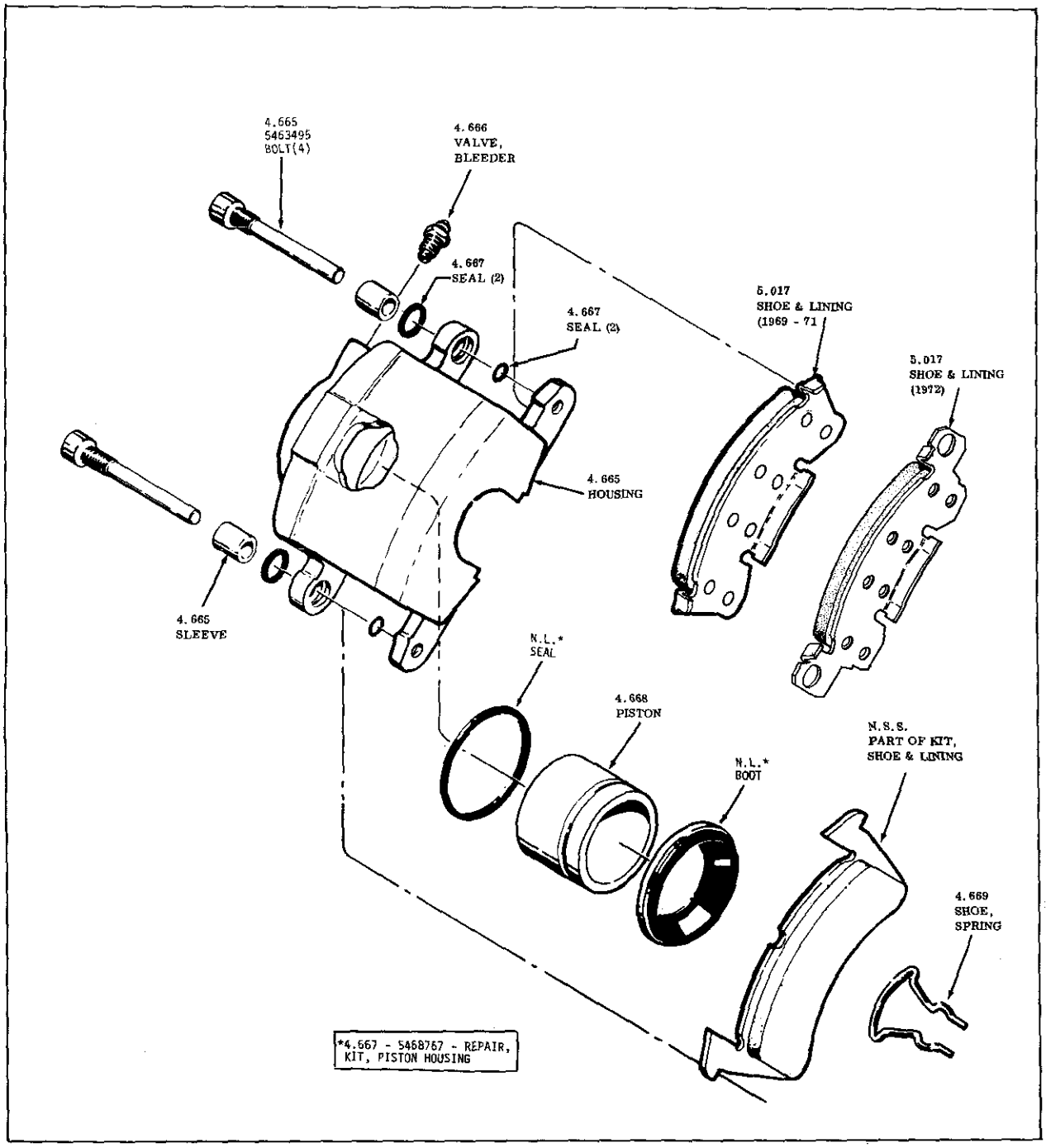

POWER DISC BRAKE CALIPERS
SINGLE PISTON
1969-1972 30-4000

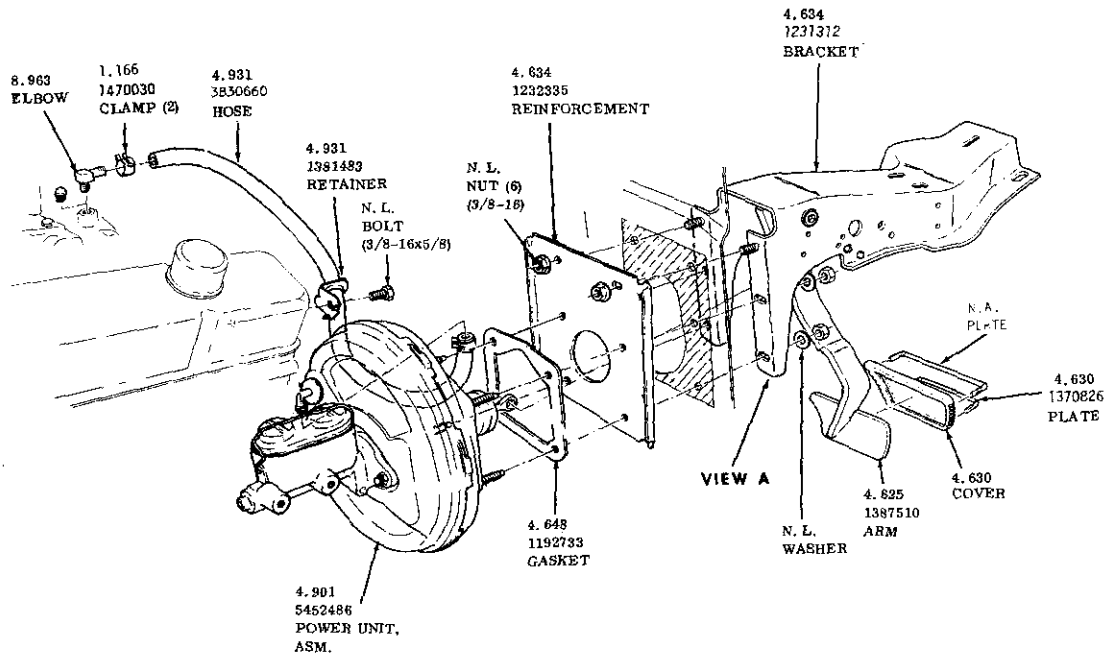

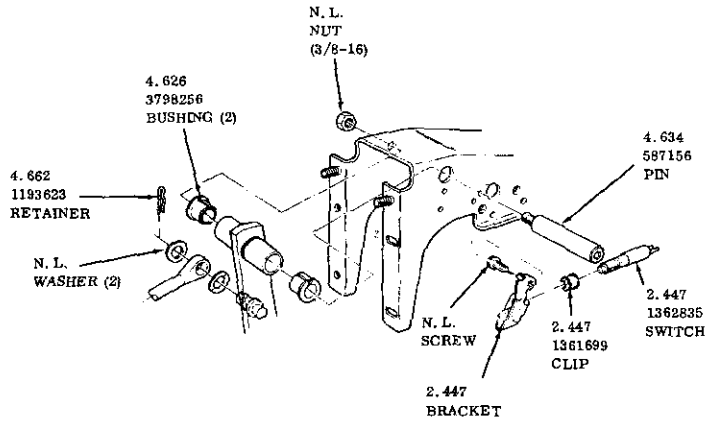

VIEW A

BRAKE PEDAL & MASTER CYLINDER - POWER BRAKE
1969 - 50-60-8000

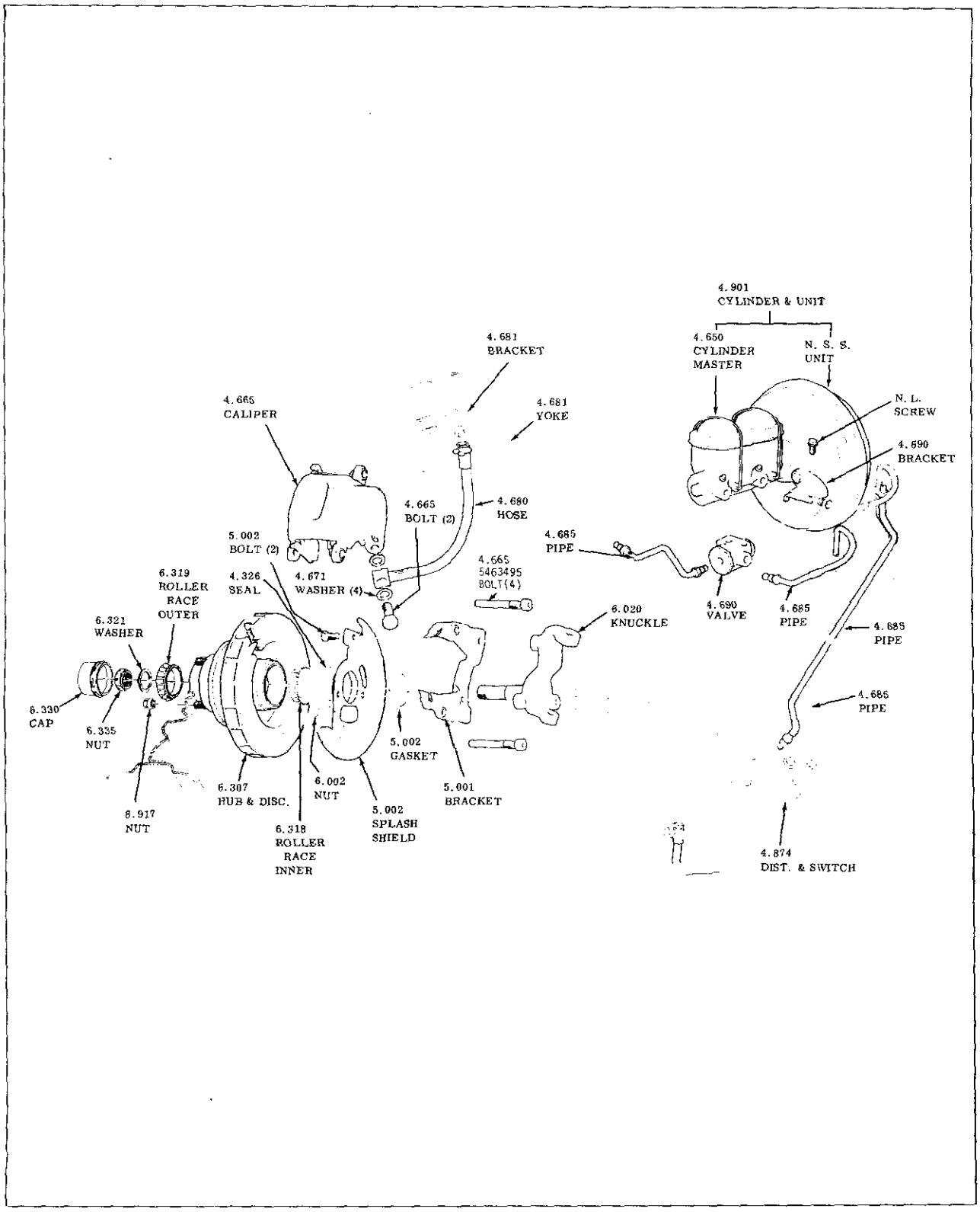

DISC BRAKES
1969-1970-30-4000

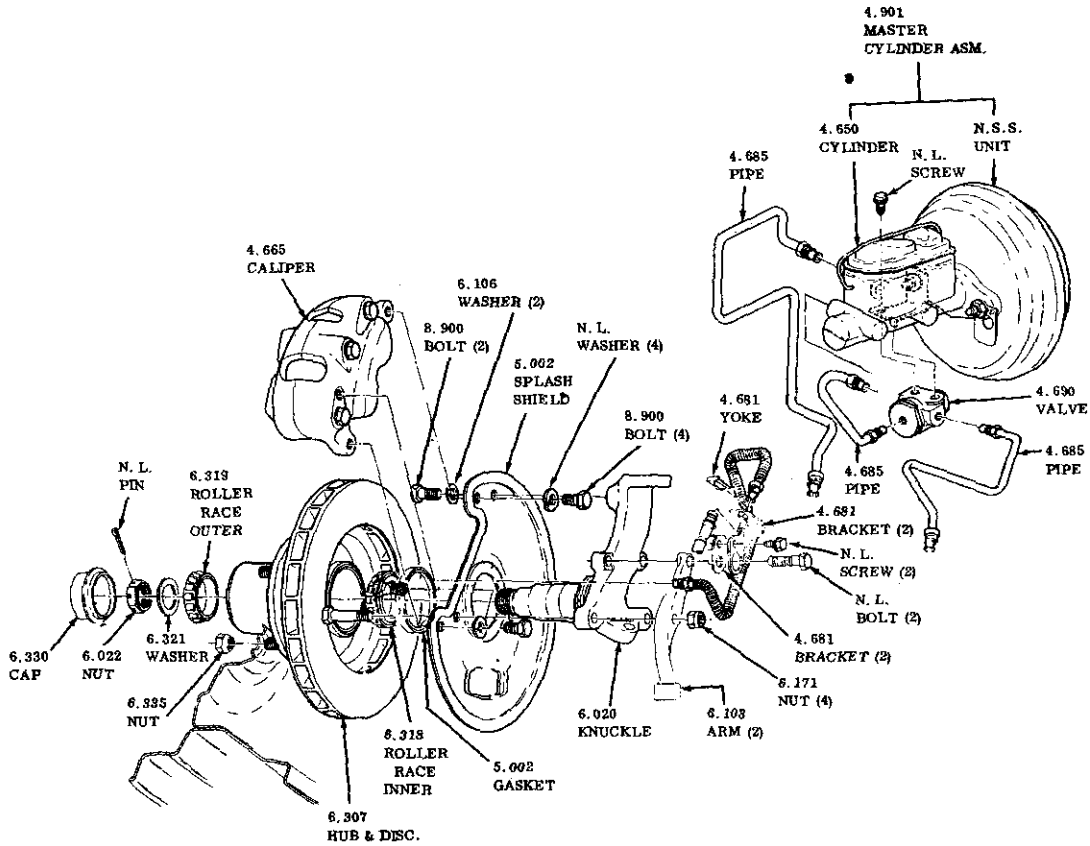

DISC BRAKES
1969-50-60-80-9000

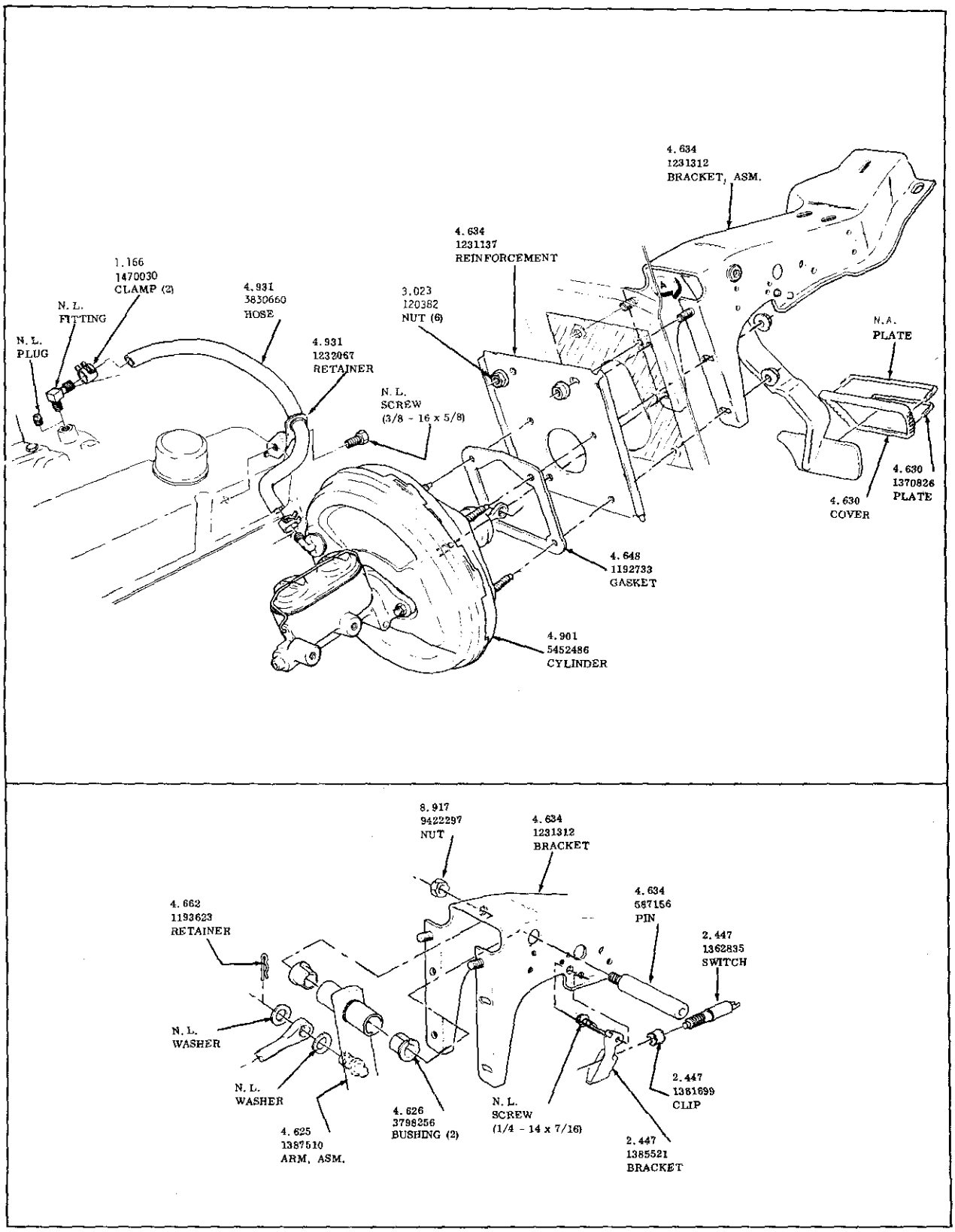

BRAKE PEDAL & MASTER CYLINDER-POWER BRAKE

1970-50-60-8000

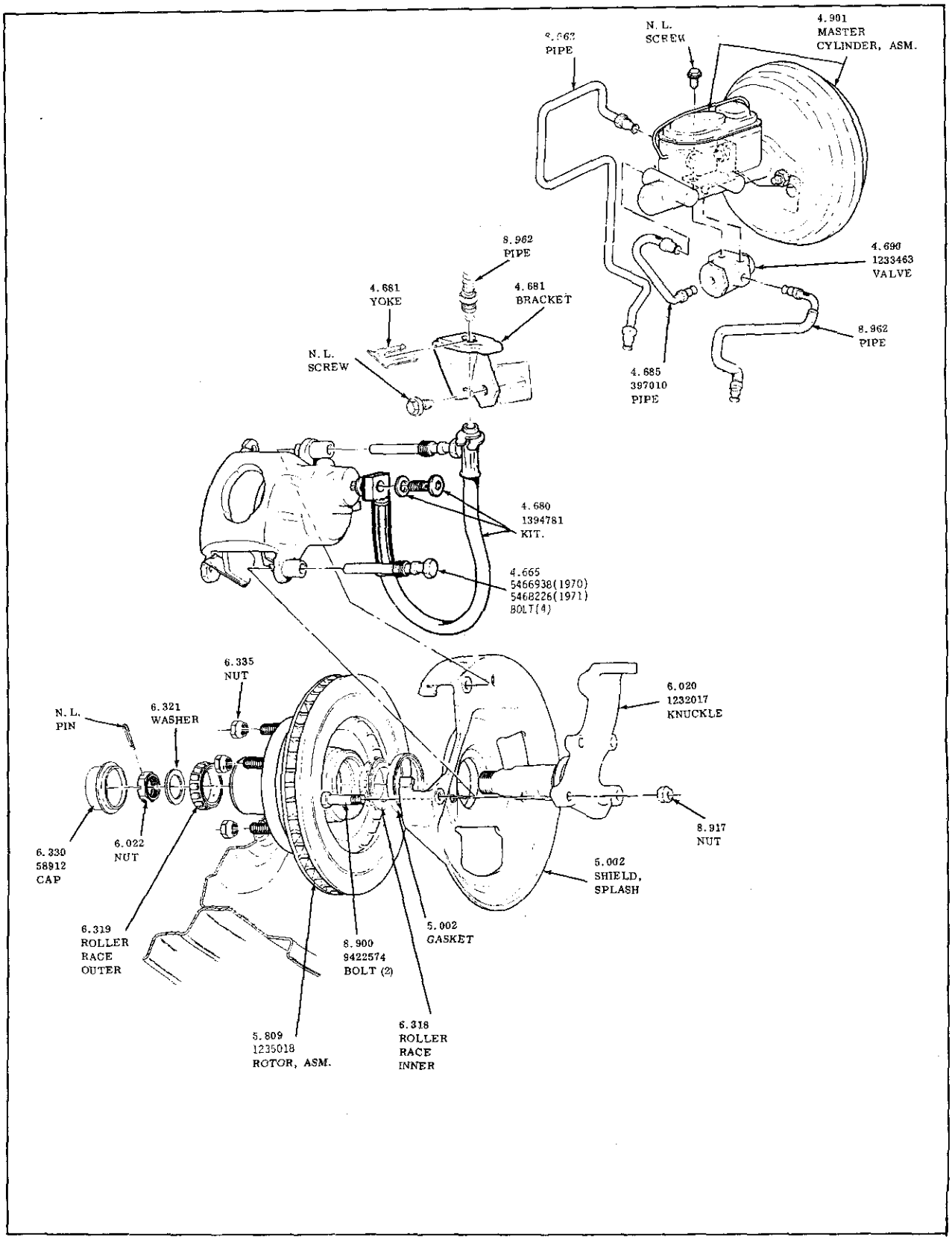

DISC BRAKES

1970-50-60-80-9000

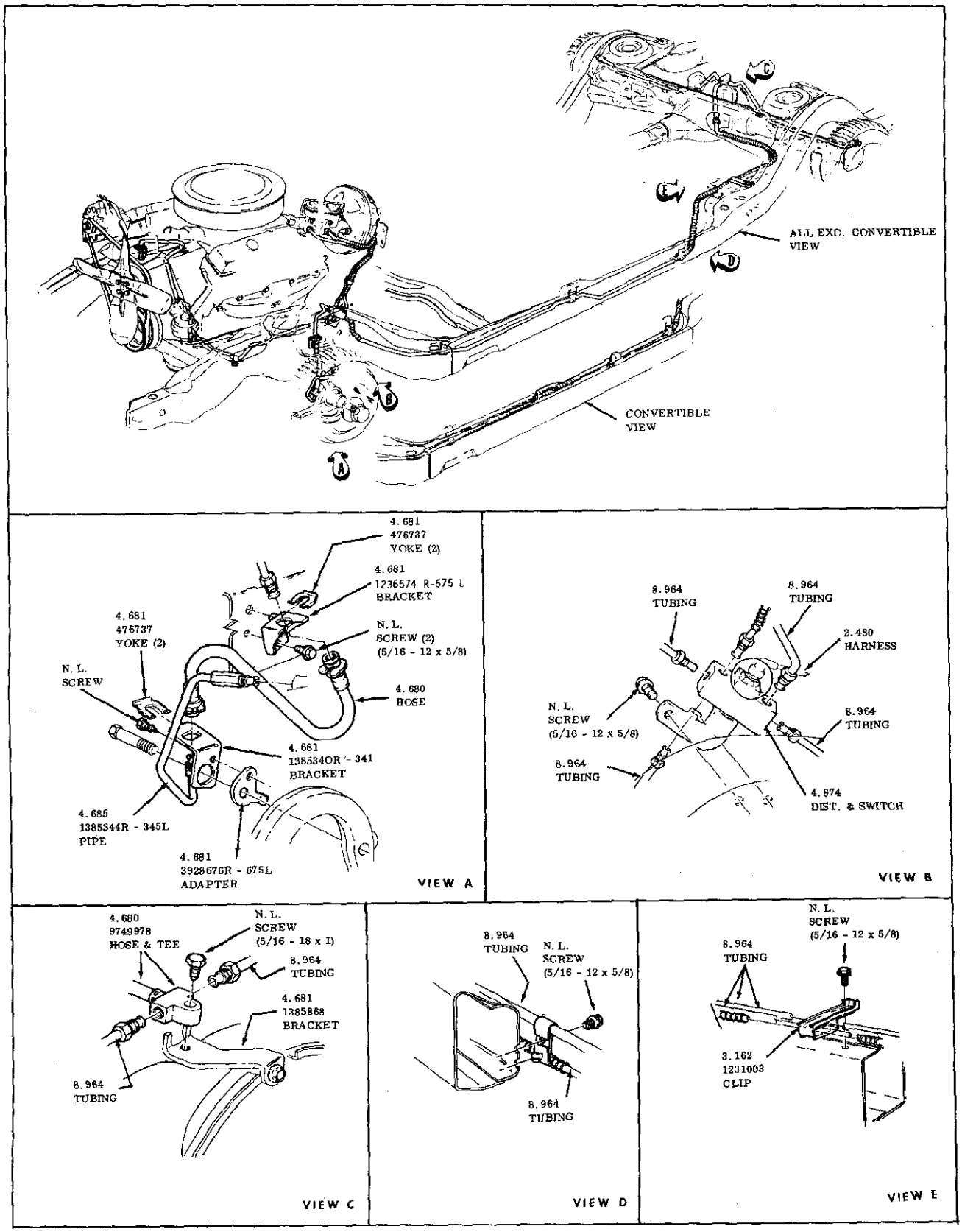

BRAKE PIPE
1970-30-4000

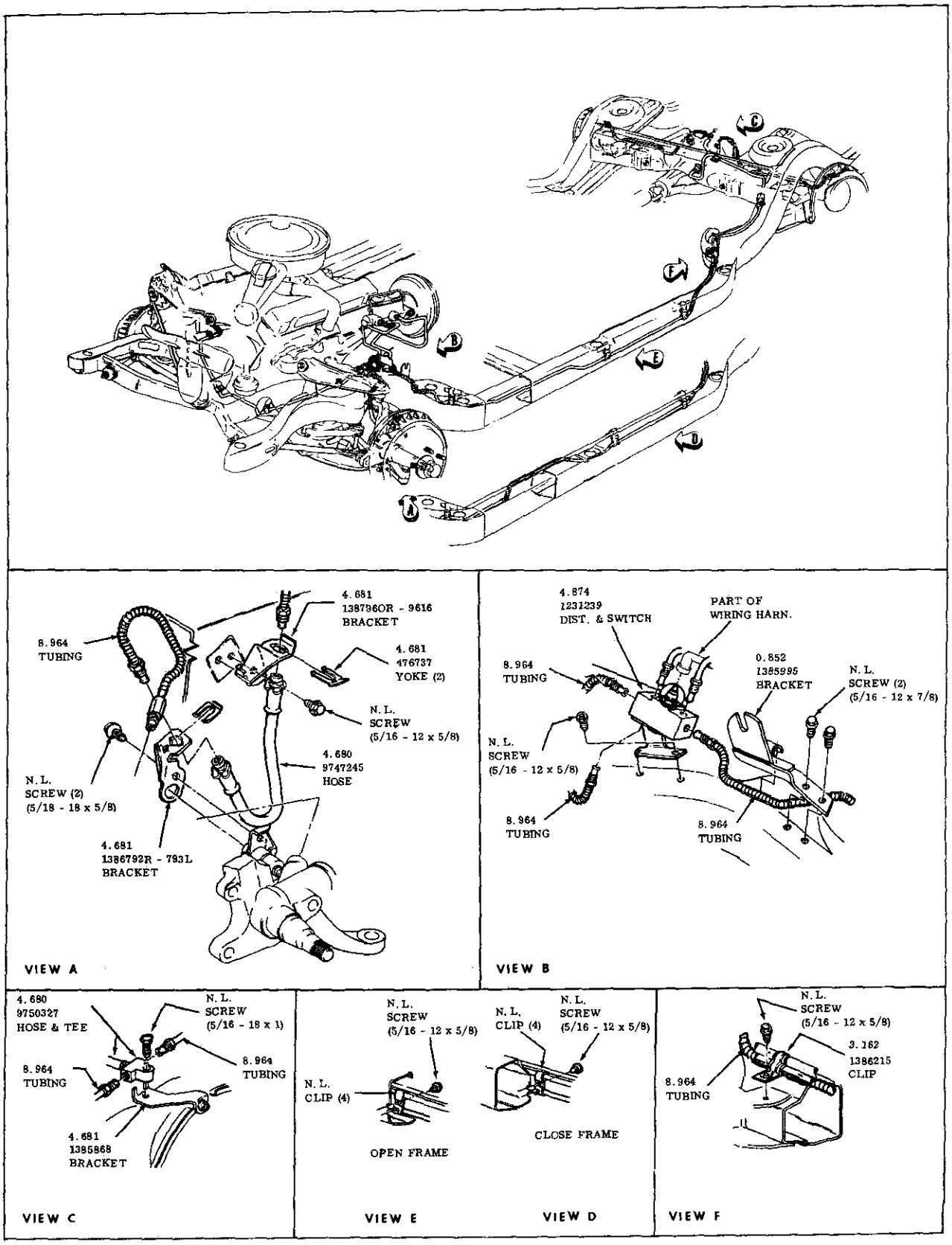

BRAKE PIPE

1970-50-60-8000

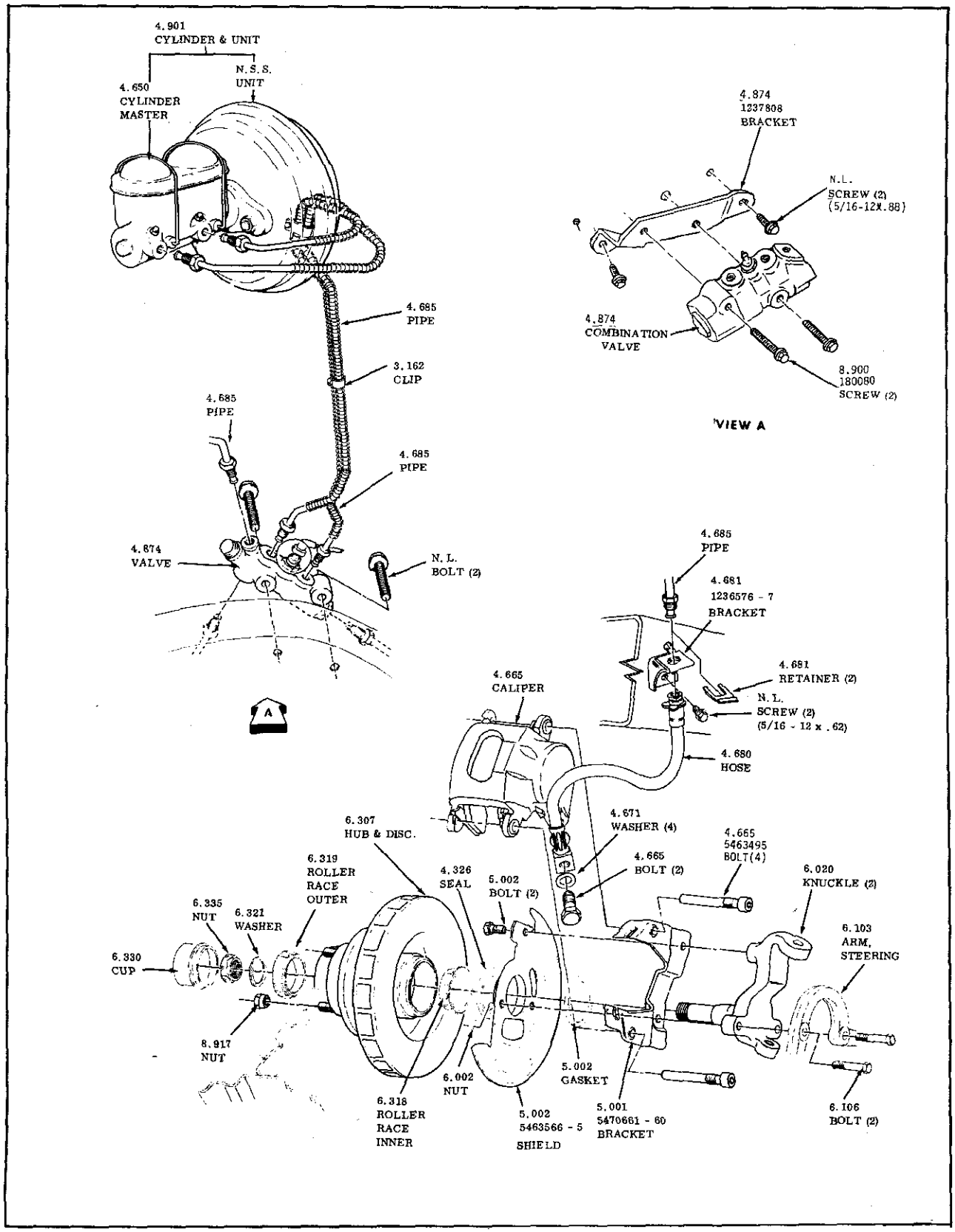

DISC BRAKES
1971-1972 30-4000

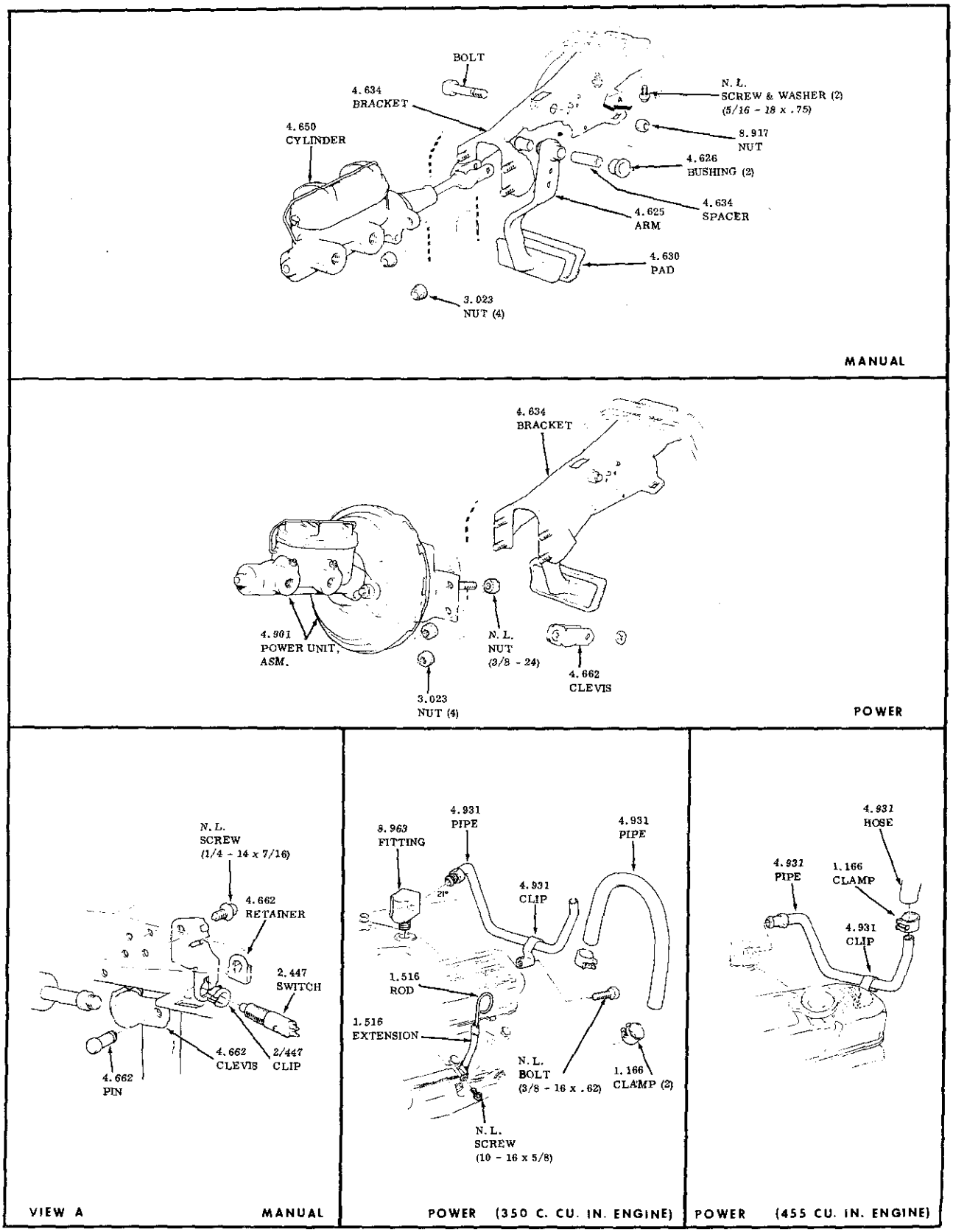

BRAKE PEDAL & MASTER CYLINDER
1971-1972 30-4000

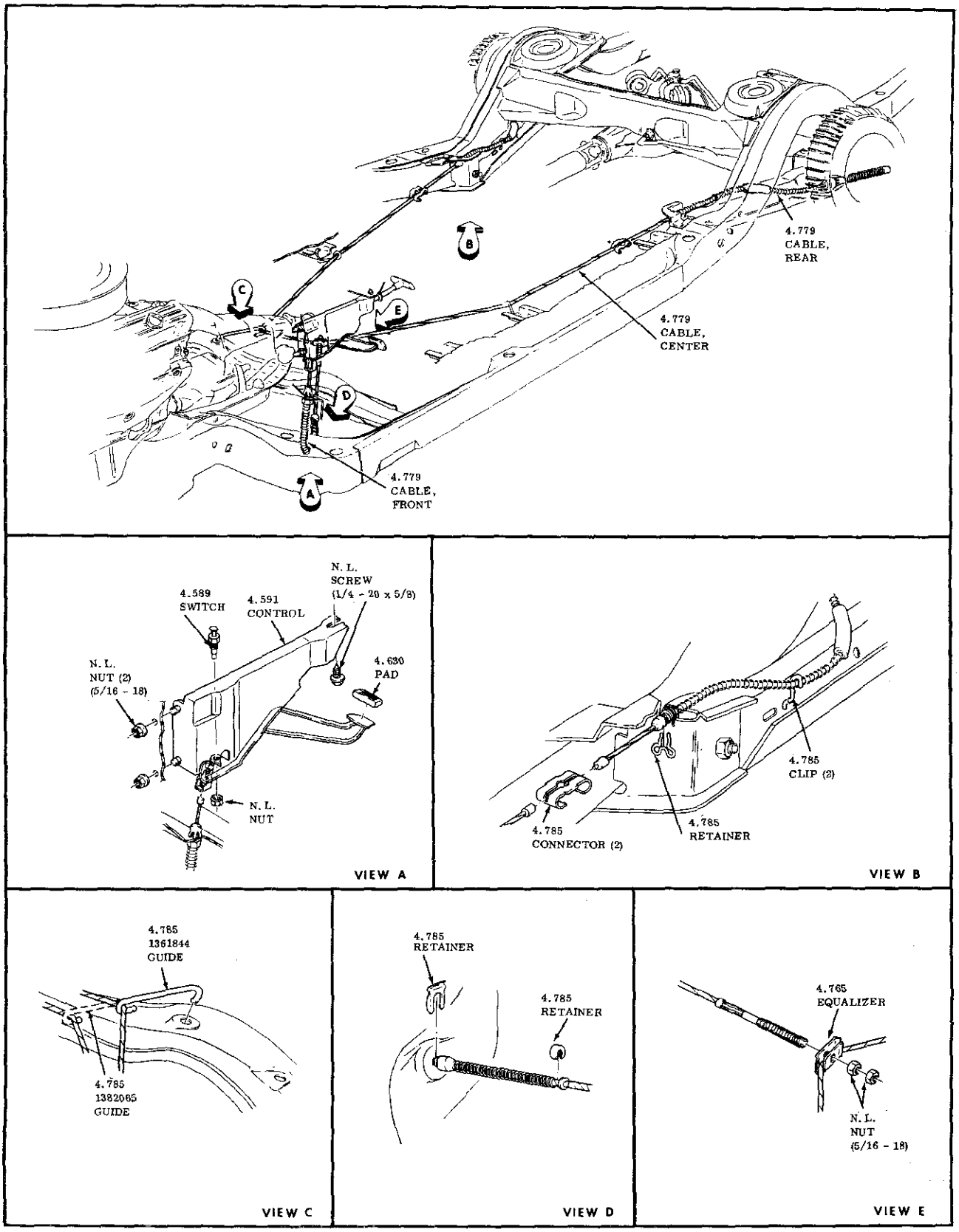

PARKING BRAKE
1971-1972 30-4000

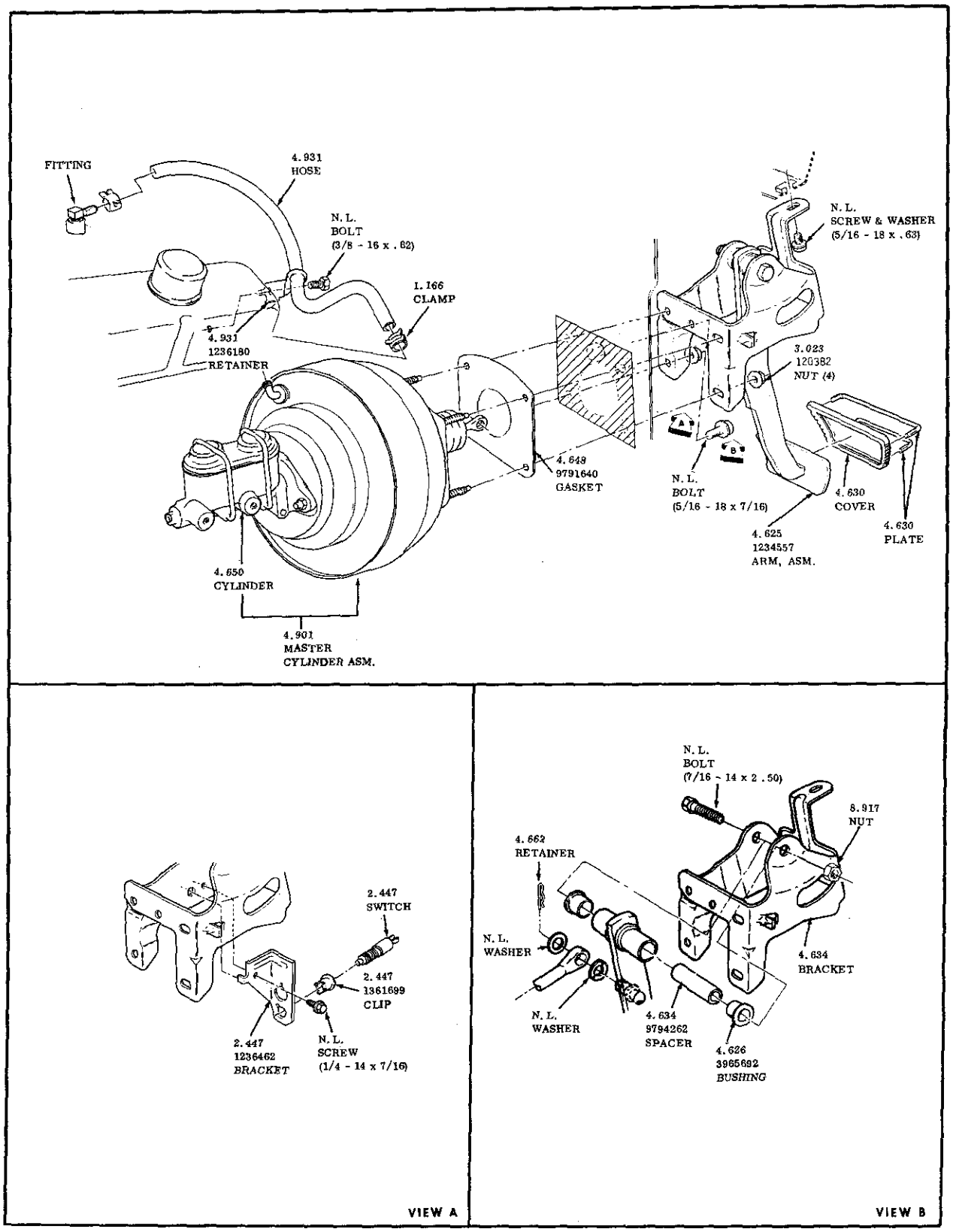

BRAKE PEDAL AND MASTER CYLINDER
1971-1972 50-60-80-9000

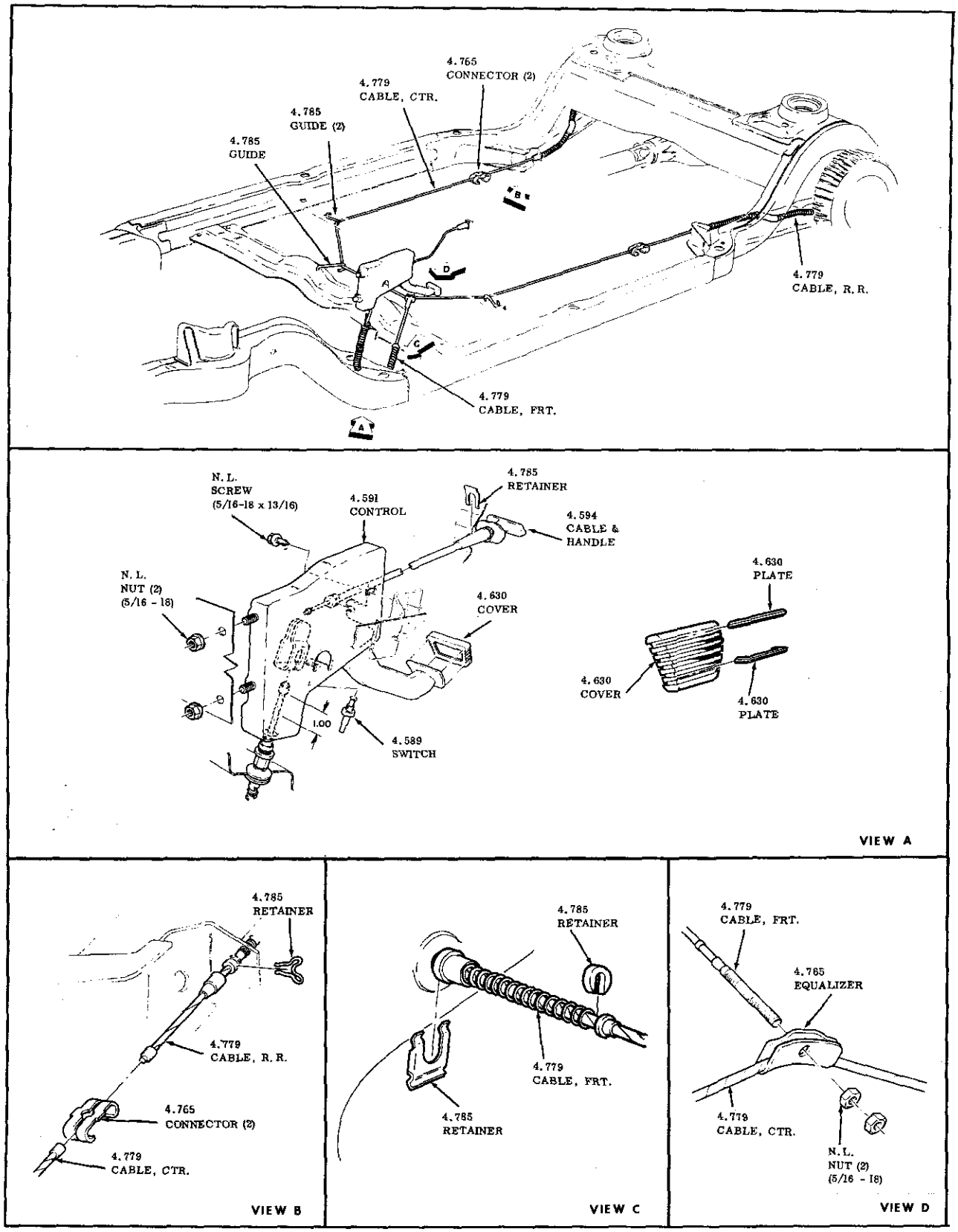

PARKING BRAKE

1971-1972 50-60-80-9000

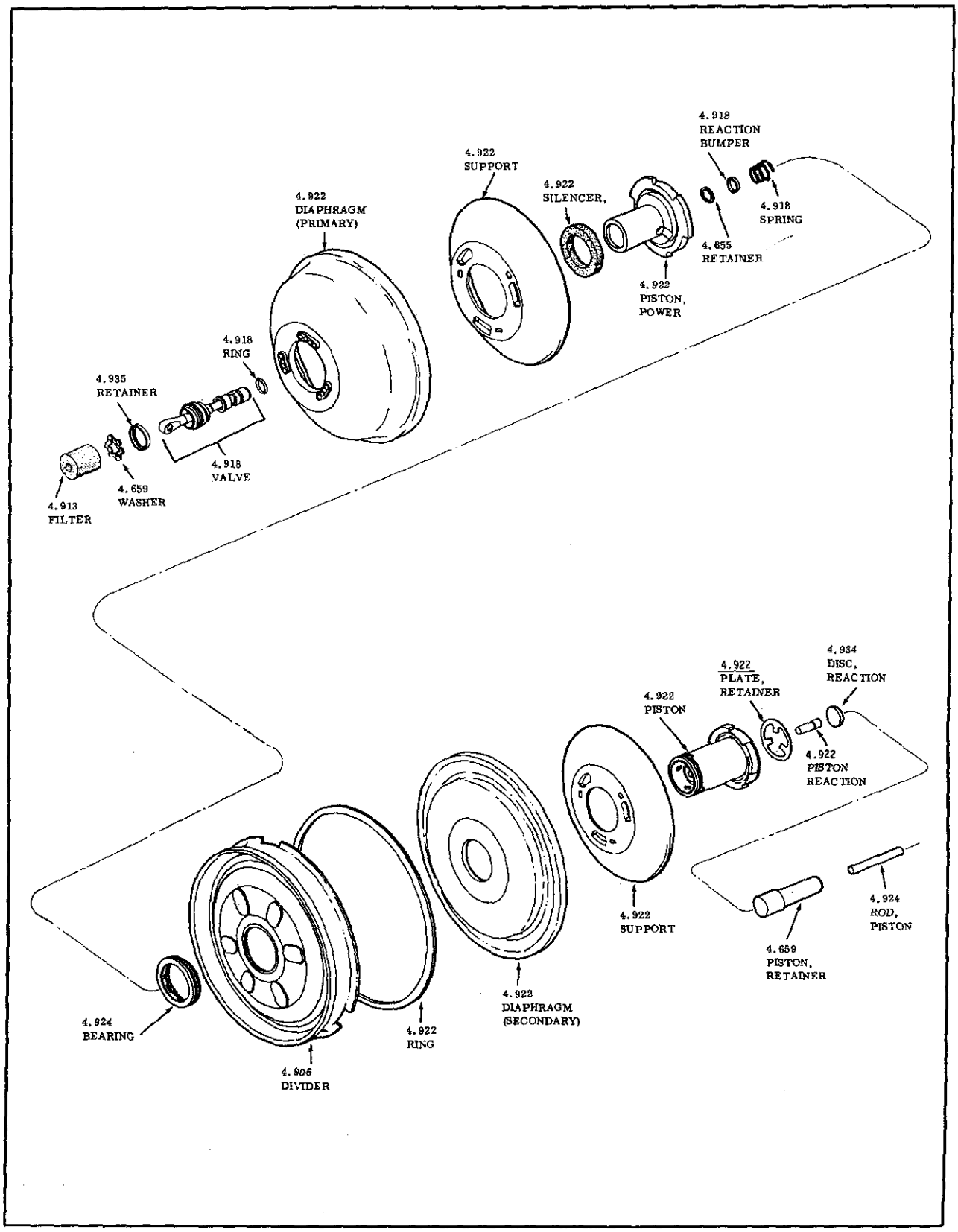

POWER PISTON
(DELCO-MORAINE)
1970-50-60-80-9000

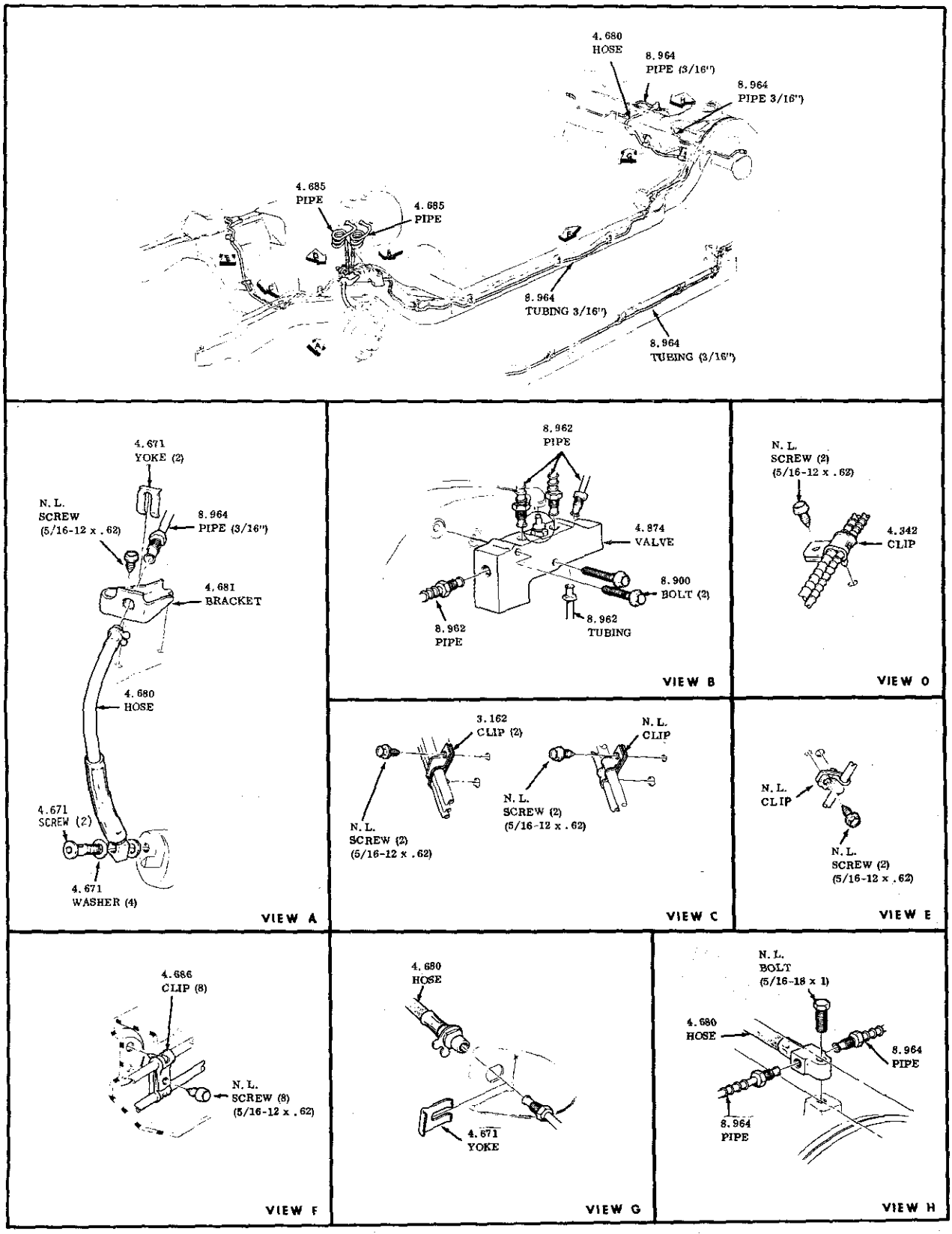

BRAKE PIPE

1971-1972 50-60-80-9000

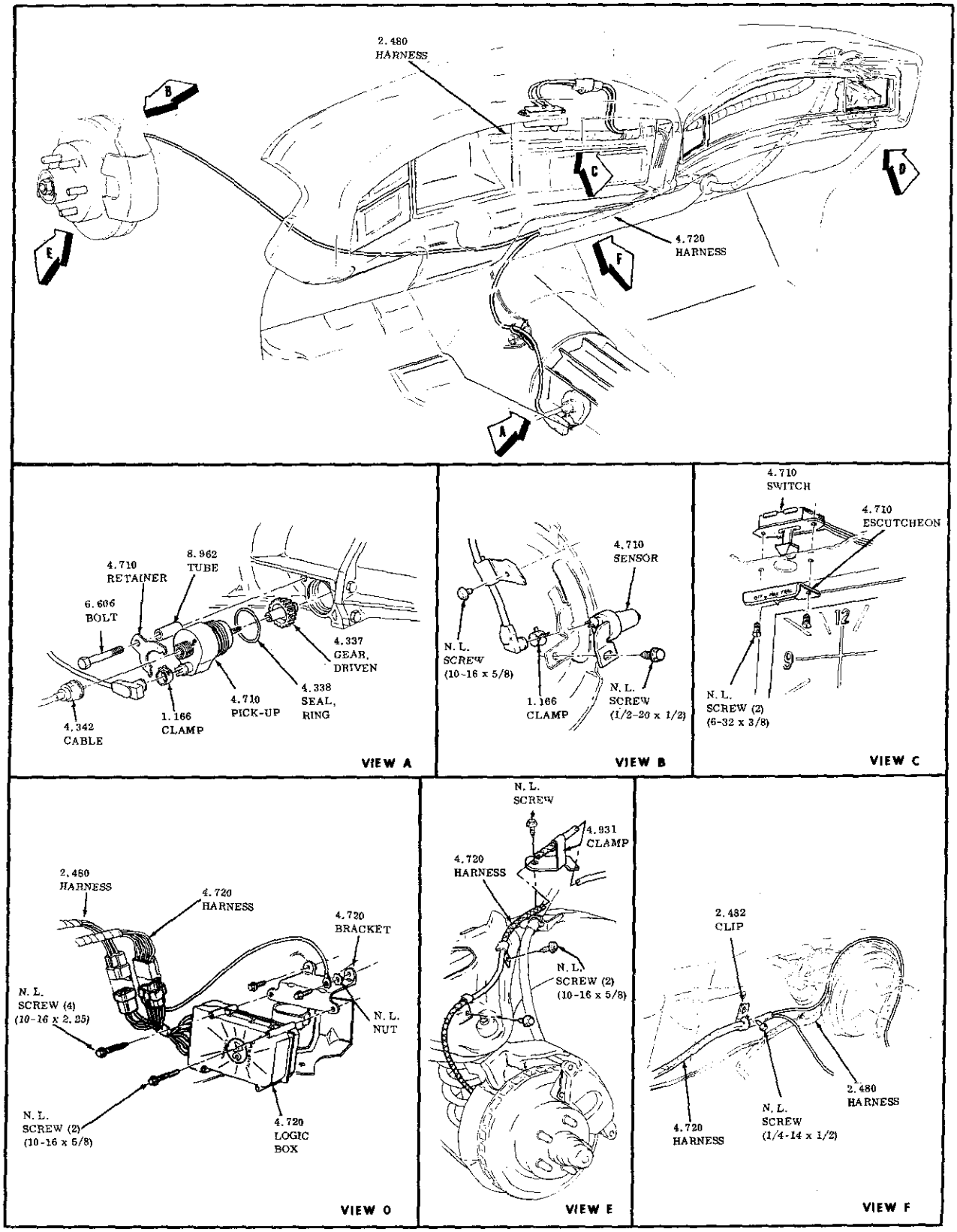

MAX TRAC

WHEEL SPIN CONTROL

1971-1972 50-60-80-9000

GROUP 5

BRAKE OPERATING

PROPELLER SHAFT

REAR AXLE

MEMORANDA

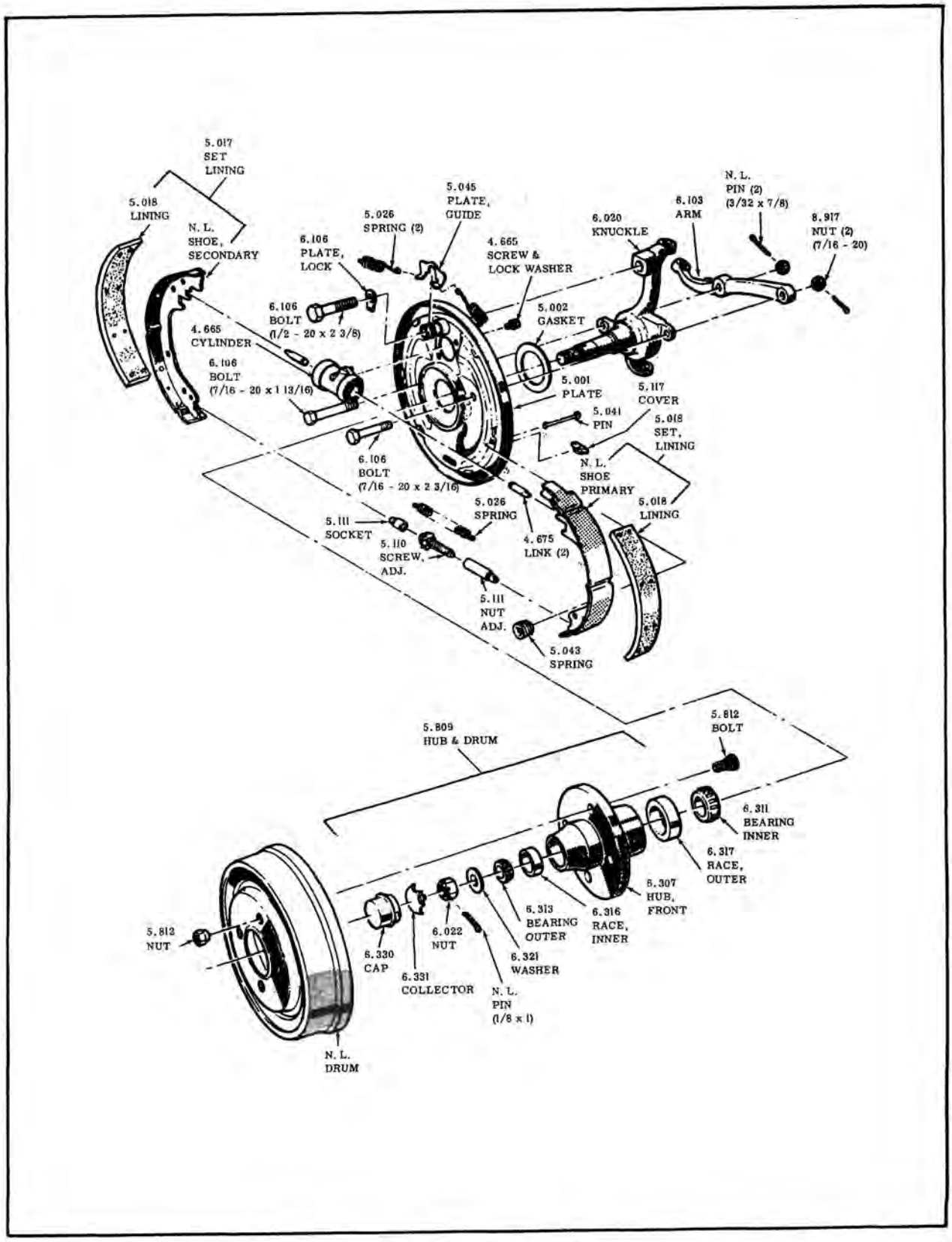

FRONT BRAKE AND DRUM
1961-62 - 4000–4100–4300

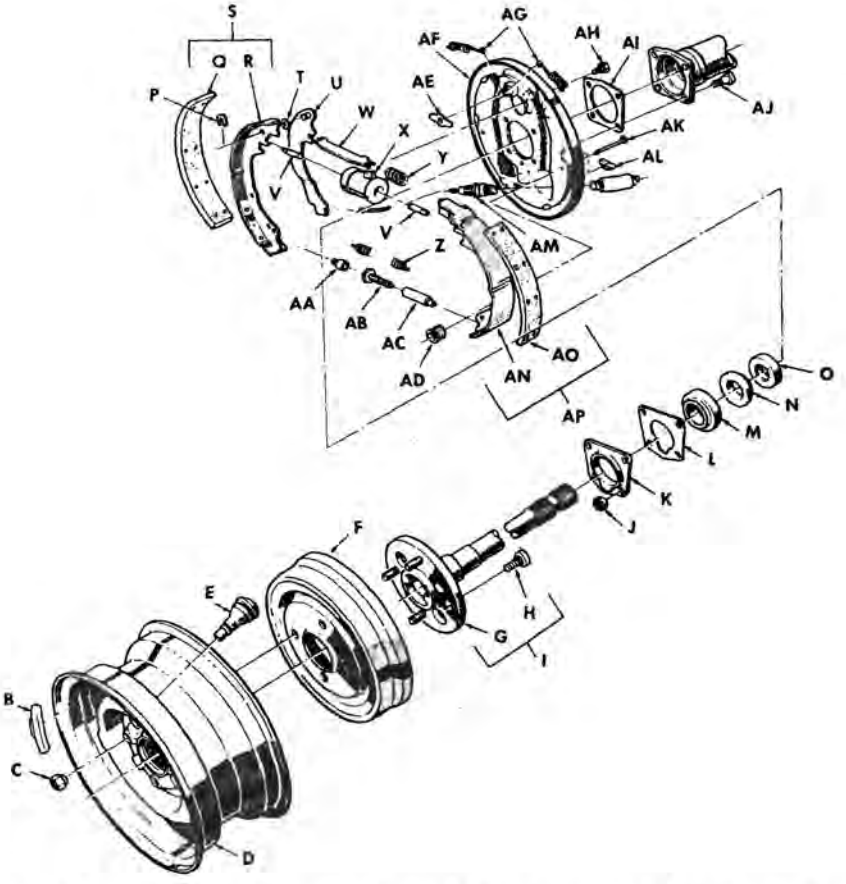

REAR WHEEL AND BRAKE—1961-62-4000-4100-4300

B	WEIGHT, Wheel	5.805
C	NUT, Rear Wheel to Axle Shaft	5.812
D	WHEEL, Steel	5.803
E	VALVE STEM, Tubeless Tire	N. L.
F	DRUM, Rear Brake	5.809
G	SHAFT, Rear Axle	N. L.
H	BOLT, Rear Wheel Hub	5.812
I	SHAFT, Axle (Including Wheel Bolts)	5.420
J	NUT, Hexagon Lock 3/8-24	N. L.
K	RETAINER, Rear Axle Shaft Bearing—Outer	5.422
L	GASKET, Rear Axle Shaft Bearing Retainer	5.855
M	BEARING, Rear Axle Shaft	5.855
N	RETAINER, Rear Axle Shaft Bearing—Inner	5.422
O	SEAL, Axle Shaft Oil	5.822
P	CLIP, Parking Brake Lever Retainer	5.158
Q	LINING (Part of Lining Set)	5.018
R	SHOE, Primary	N. L.
S	SET, Brake Shoe Lining	5.018
T	WASHER, Spring	5.158
U	LEVER, Rear Parking Brake	5.149
V	LINK, Brake Wheel Cylinder to Brake Shoe	4.675
W	STRUT, Rear Parking Brake	5.150
X	CYLINDER, Rear Wheel Brake	4.665
Y	SPRING, Rear Brake Parking Brake Strut to Shoe	5.151
Z	SPRING, Brake Shoe Adjustment Screw	5.026
AA	SOCKET, Brake Shoe Adjustment Screw	5.111
AB	SCREW, Brake Shoe Adjustment	5.110
AC	NUT, Brake Shoe Pivot Adjustment Screw	5.111
AD	SPRING, Brake Shoe Hold Down	5.043
AE	GUIDE, Anchor Shoe	5.045
AF	PLATE, Backing Rear	5.001
AG	SPRING, Rear Brake Anchor Pin to Brake Shoe	5.026
AH	SCREW AND LOCK WASHER, Cylinder to Backing Plate	4.665
AI	GASKET, Rear Brake to Axle Housing	5.819
AJ	BOLT, Rear Brake to Axle Housing	5.002
AK	PIN, Rear Brake Shoe Hold Down Spring	5.041
AL	COVER, Brake Adjusting Hole	5.117
AM	VALVE, Wheel Brake Cylinder Bleeder	4.666
AN	SHOE, Secondary	N. L.
AO	LINING (Part of Lining Set)	5.018
AP	SET, Brake Shoe Lining	5.018

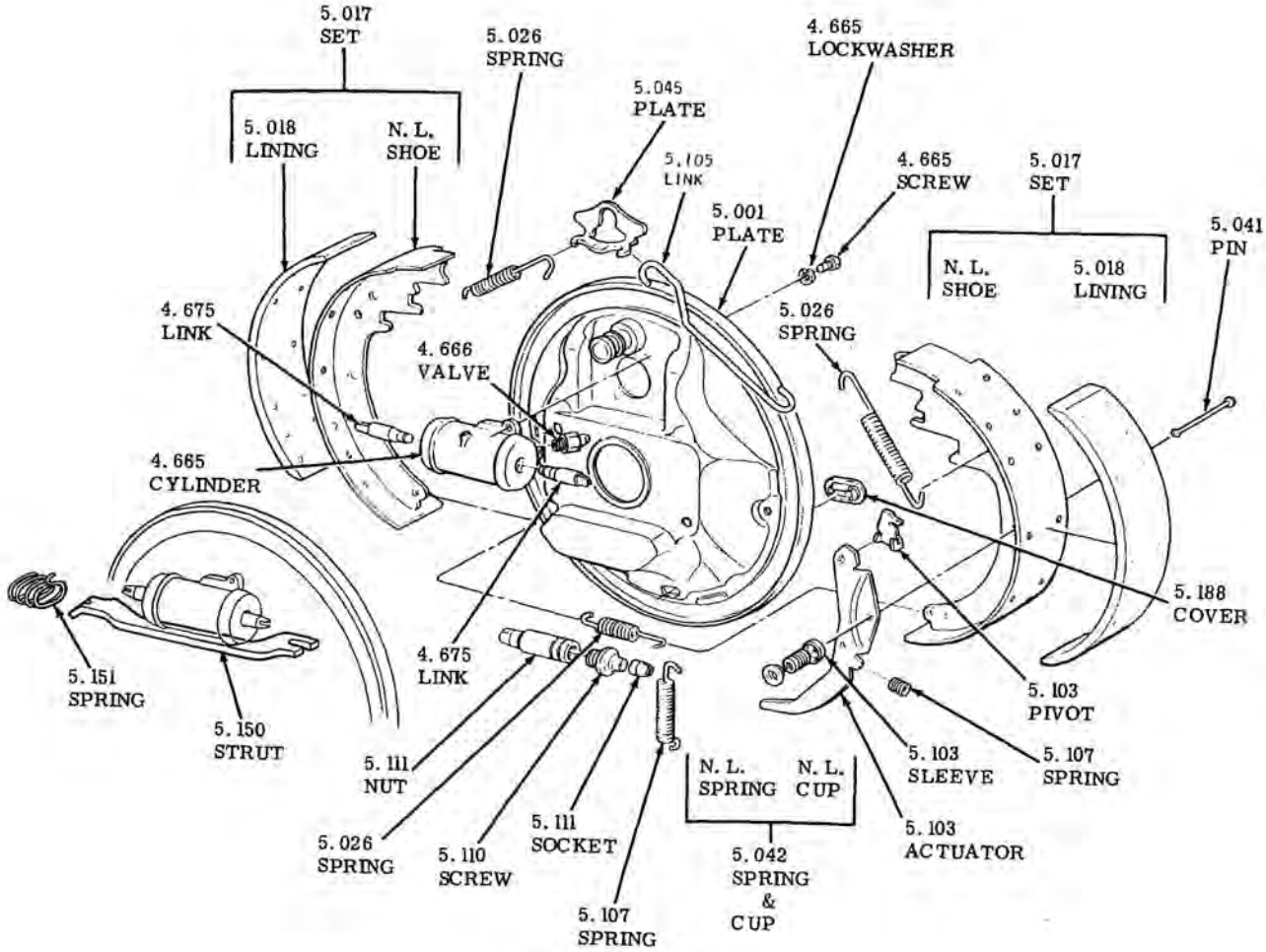

SELF-ADJUSTING BRAKES
1963-1967 - ALL

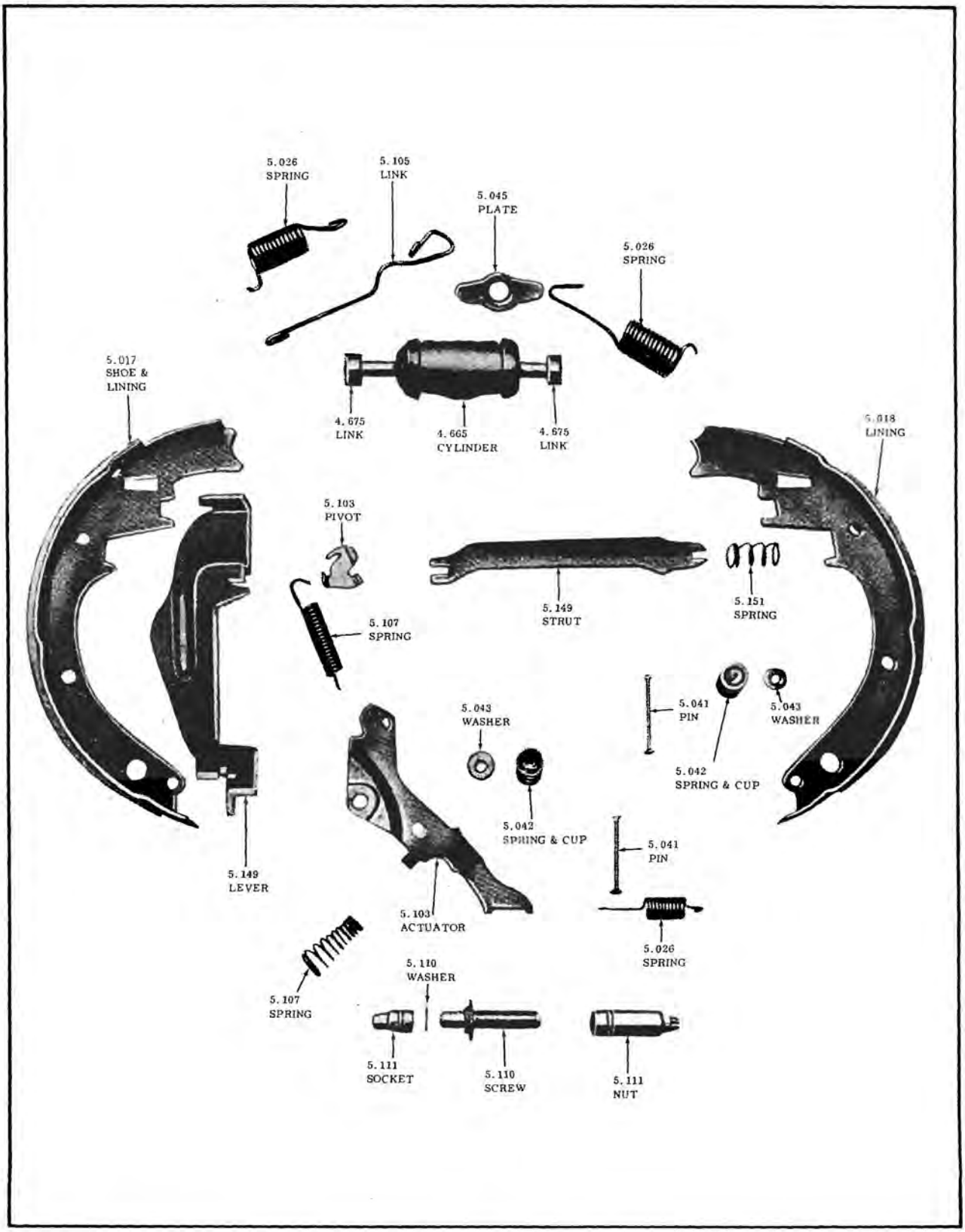

TYPICAL
SELF ADJUSTING BRAKES
1968-1972 - ALL

REAR SUSPENSION—1960

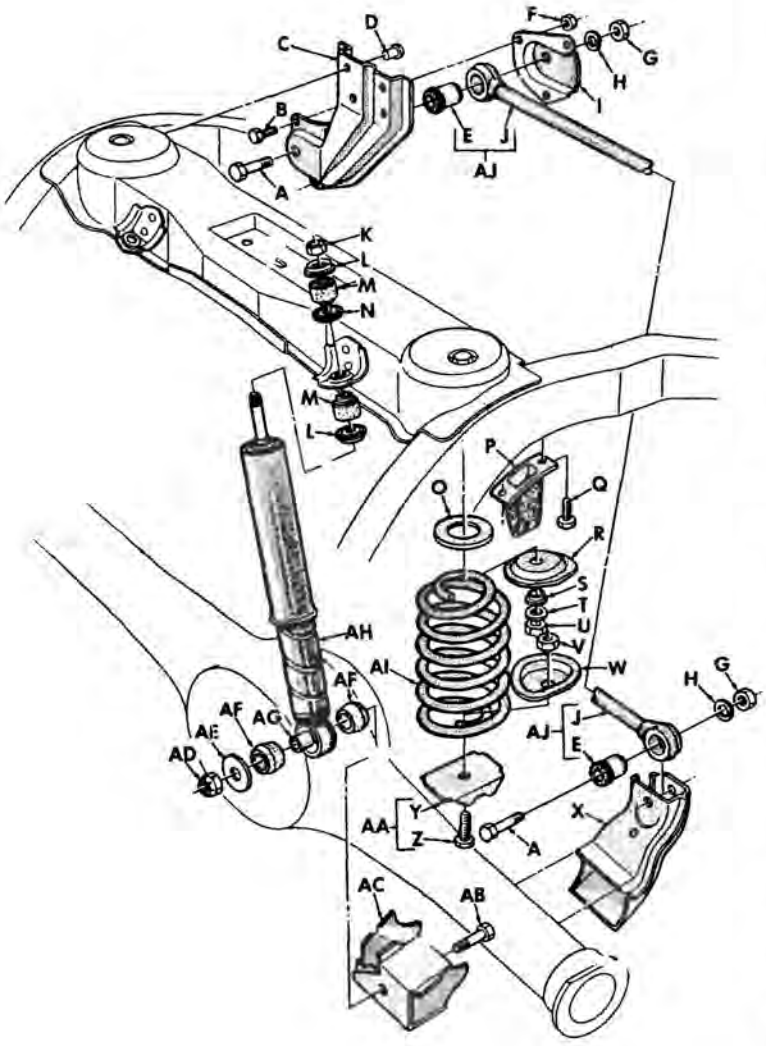

A	BOLT, Hex. Hd.—5/8-18 x 3	N.L.
B	BOLT, Hex. Hd.—3/8-16 x 3/4	N.L.
C	BRACKET, Track Bar-Frame End	5.418
D	RIVET, Button Head—7/16 x 1	N.L.
E	BUSHING, Track Bar	5.417
F	NUT, Hex.—3/8-16	N.L.
G	NUT, Hex.—5/8-18	N.L.
H	WASHER, Lock—5/8	N.L.
I	SUPPORT, Track Bar	5.418
J	BAR, Track	N.L.
K	NUT, Special	7.348
L	RETAINER, Grommet—Rear Shock to Bracket—Upper	7.389
M	BUSHING, Rear Shock to Bracket—Upper. (7.244)	7.345
N	RETAINER, Grommet—InRear Shock Mounting Bracket	7.246
O	INSULATOR, Rear Spring—Upper End	7.545
P	BUMPER, Rear Axle	5.395
Q	BOLT, Hex. Head Tapping—5/16-18 x 1/2	N.L.
R	CLAMP, Rear Spring—Upper	7.518
S	INSULATOR, Rear Spring Clamp Bolt	7.545
T	WASHER, Plain	N.L.
U	NUT, Hex. with Lockwasher —3/8-24	N.L.
V	NUT, Hex.—5/16-24	N.L.
W	CLAMP, Rear Spring—Lower	7.518
X	BRACKET, Track Bar—Axle End	5.418
Y	SEAT, Rear Spring	N.L.
Z	BOLT, Rear Spring Clamp	7.531
AA	SEAT, Rear Spring	5.403
AB	BOLT, Hex. Head—7/16-20 x 2 1/4	8.900
AC	BRACKET, Shock Absorber & Strut Rod Mounting	5.394
AD	NUT, Rear Shock to Rear Shock & Strut Rod Mounting Bracket	7.347
AE	WASHER, Plain	N.L.
AF	BUSHING, Rear Shock to Bracket—Lower End Pivot Bushing	7.347
AG	SPACER, Rear Shock Absorber Bracket	7.347
AH	SHOCK ABSORBER—Rear	7.345
AI	SPRING, Chassis—Rear	7.503
AJ	BAR AND BUSHING, Rear Track	5.415

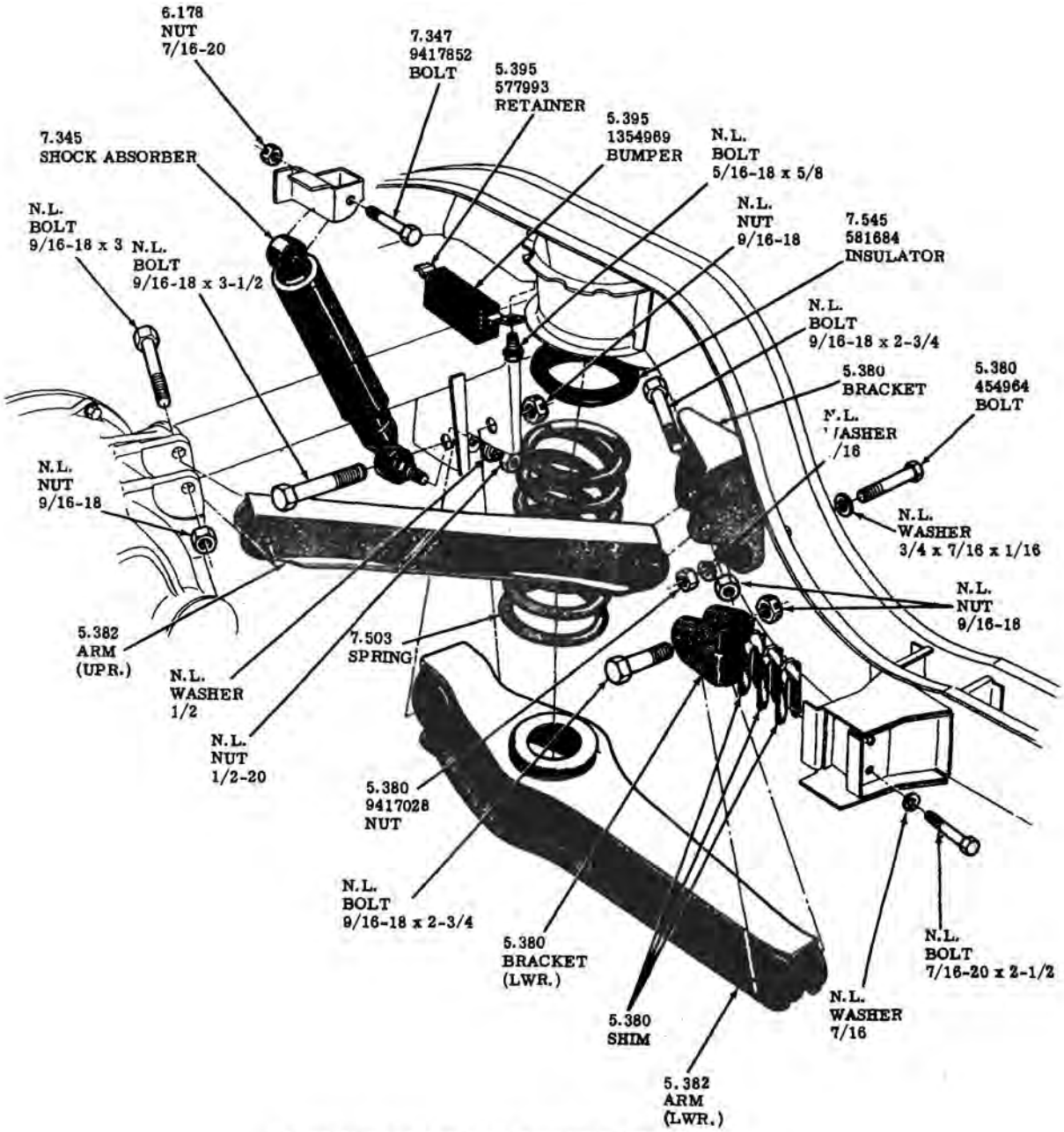

TYPICAL REAR SUSPENSION-1961-63-40-41-4300

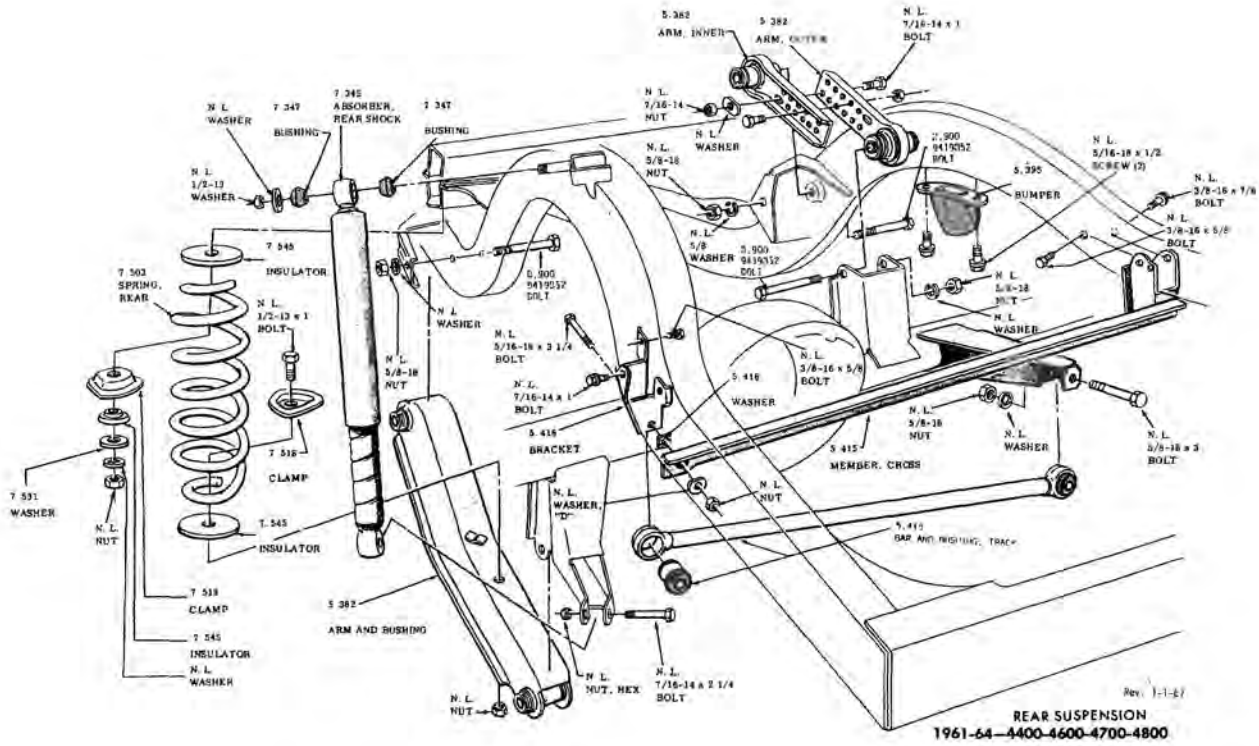
5.382
ARM, INNER
5.382
ARM, OUTER
N. L.
7/16-14 x 1
BOLT
N. L.
WASHER
7.347
BUSHING
7.345
ABSORBER,
REAR SHOCK
7.347
BUSHING
N. L.
7/16-14
NUT
N. L.
WASHER
N. L.
1/2-13
WASHER
N. L.
5/8-18
NUT
2.900
9419052
BOLT
5.395
BUMPER
N. L.
5/16-18 x 1/2
SCREW (2)
N. L.
3/8-16 x 1/8
BOLT
N. L.
3/8-16 x 5/8
BOLT
7.545
INSULATOR
7.502
SPRING,
REAR
N. L.
5/8
WASHER
5.900
9419052
BOLT
0.900
9419052
BOLT
N. L.
5/8-18
BOLT
N. L.
WASHER
N. L.
1/2-13 x 1
BOLT
N. L.
WASHER
N. L.
5/16-18 x 3 1/4
BOLT
N. L.
5/8-18
NUT
N. L.
3/8-16 x 5/8
BOLT
N. L.
7/16-14 x 1
BOLT
5.416
WASHER
N. L.
5/8-18
NUT
N. L.
WASHER
N. L.
5/8-18 x 3
BOLT
7.518
CLAMP
5.415
BRACKET
5.415
MEMBER, CROSS
7.531
WASHER
N. L.
NUT
N. L.
WASHER,
"D"
N. L.
NUT
7.545
INSULATOR
5.415
BAR AND BUSHING, TRACK
7.518
CLAMP
5.382
ARM AND BUSHING
7.545
INSULATOR
N. L.
WASHER
N. L.
NUT, HEX
N. L.
7/16-14 x 2 1/4
BOLT
N. L.
NUT
Rev. 1-1-67
REAR SUSPENSION
1961-64—4400-4600-4700-4800

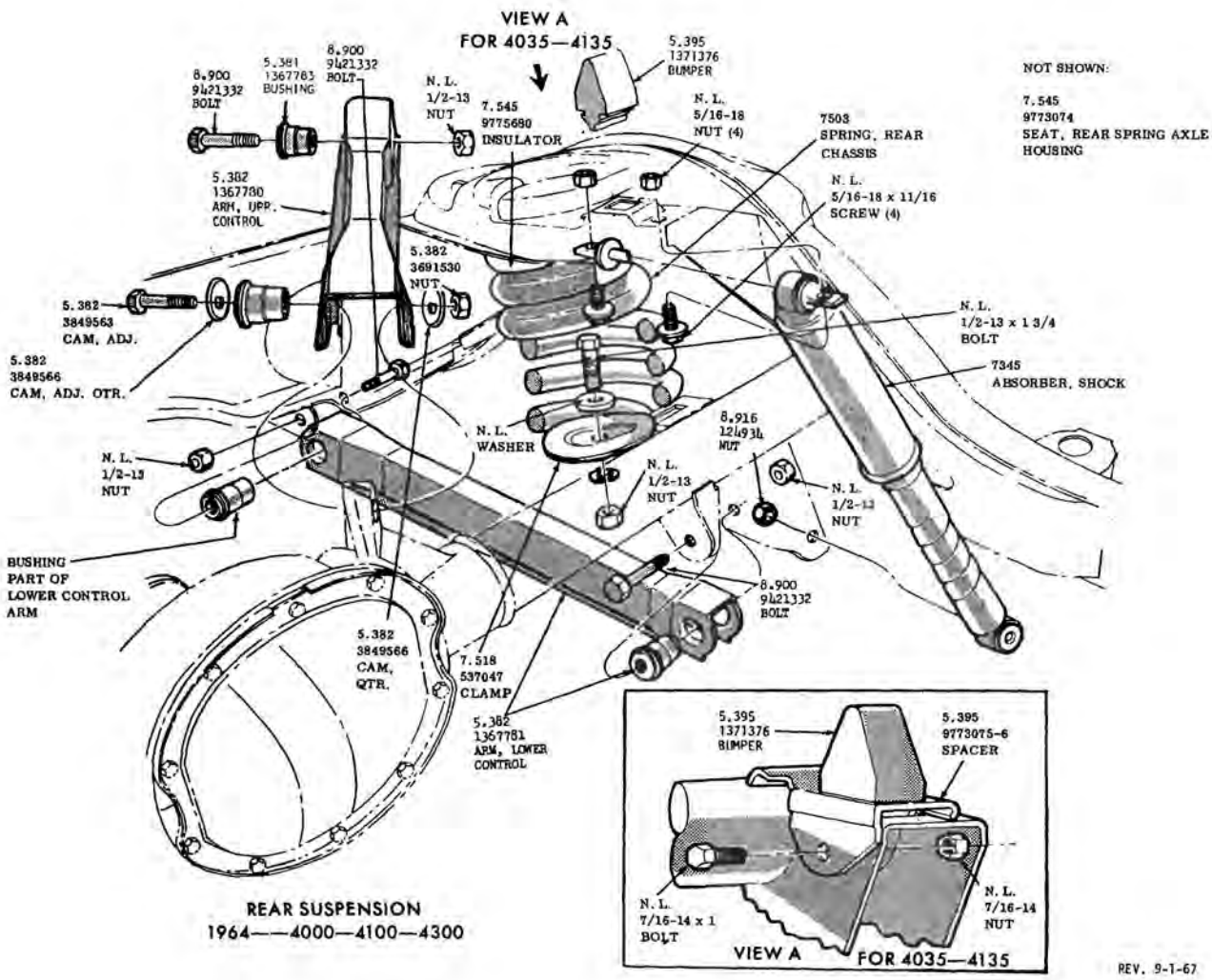
VIEW A
FOR 4035—4135
5.395
1371376
BUMPER
NOT SHOWN:
7.545
9773074
SEAT, REAR SPRING AXLE HOUSING
8.900
9421332
BOLT
5.381
1367783
BUSHING
8.900
9421332
BOLT
N. L.
1/2-13
NUT
7.545
9775680
INSULATOR
N. L.
5/16-18
NUT (4)
7503
SPRING, REAR CHASSIS
N. L.
5/16-18 x 11/16
SCREW (4)
5.382
1367780
ARM, UPR. CONTROL
5.382
3691530
NUT
5.382
3849563
CAM, ADJ.
5.382
3849566
CAM, ADJ. OTR.
N. L.
1/2-13 x 1 3/4
BOLT
7345
ABSORBER, SHOCK
N. L.
WASHER
8.916
124934
NUT
N. L.
1/2-13
NUT
N. L.
1/2-13
NUT
N. L.
1/2-13
NUT
BUSHING
PART OF
LOWER CONTROL
ARM
8.900
9421332
BOLT
5.382
3849566
CAM,
QTR.
7.518
537047
CLAMP
5.382
1367781
ARM, LOWER CONTROL
5.395
1371376
BUMPER
5.395
9773075-6
SPACER
N. L.
7/16-14 x 1
BOLT
N. L.
7/16-14
NUT
VIEW A
FOR 4035—4135
REAR SUSPENSION
1964——4000—4100—4300
REV. 9-1-67

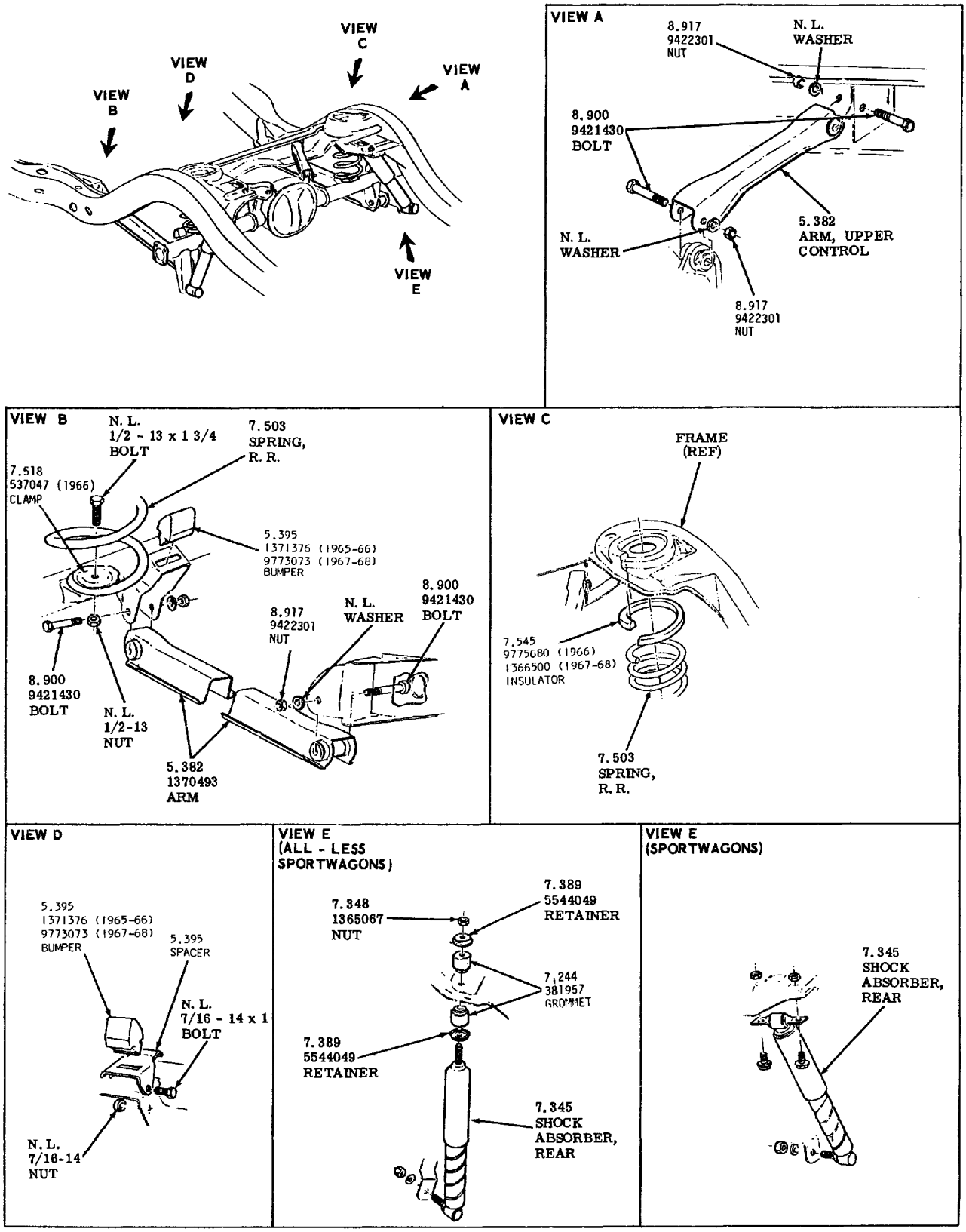

REAR WHEEL SUSPENSION
1965-1967-30-4000

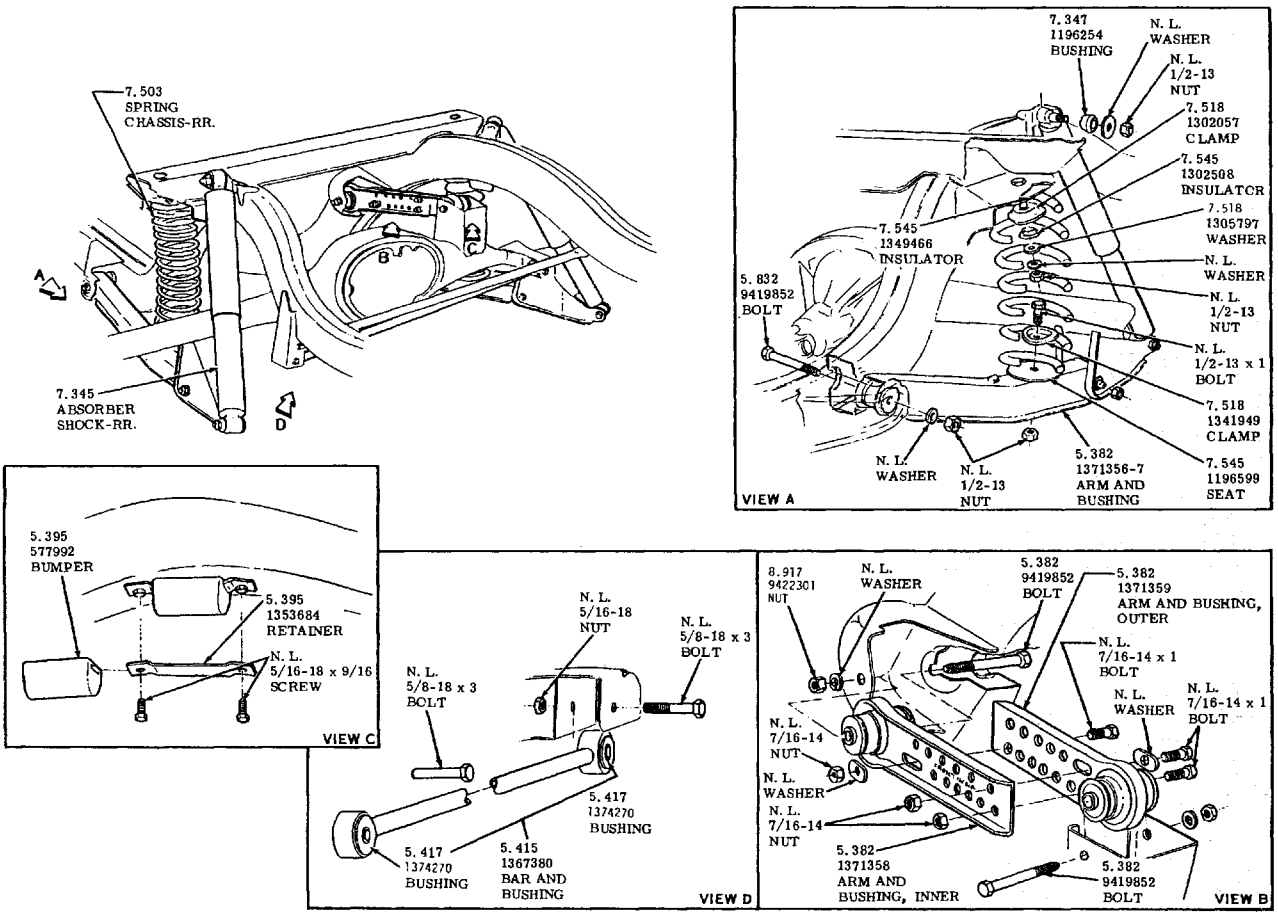

REAR WHEEL SUSPENSION
1965 - RIVIERA

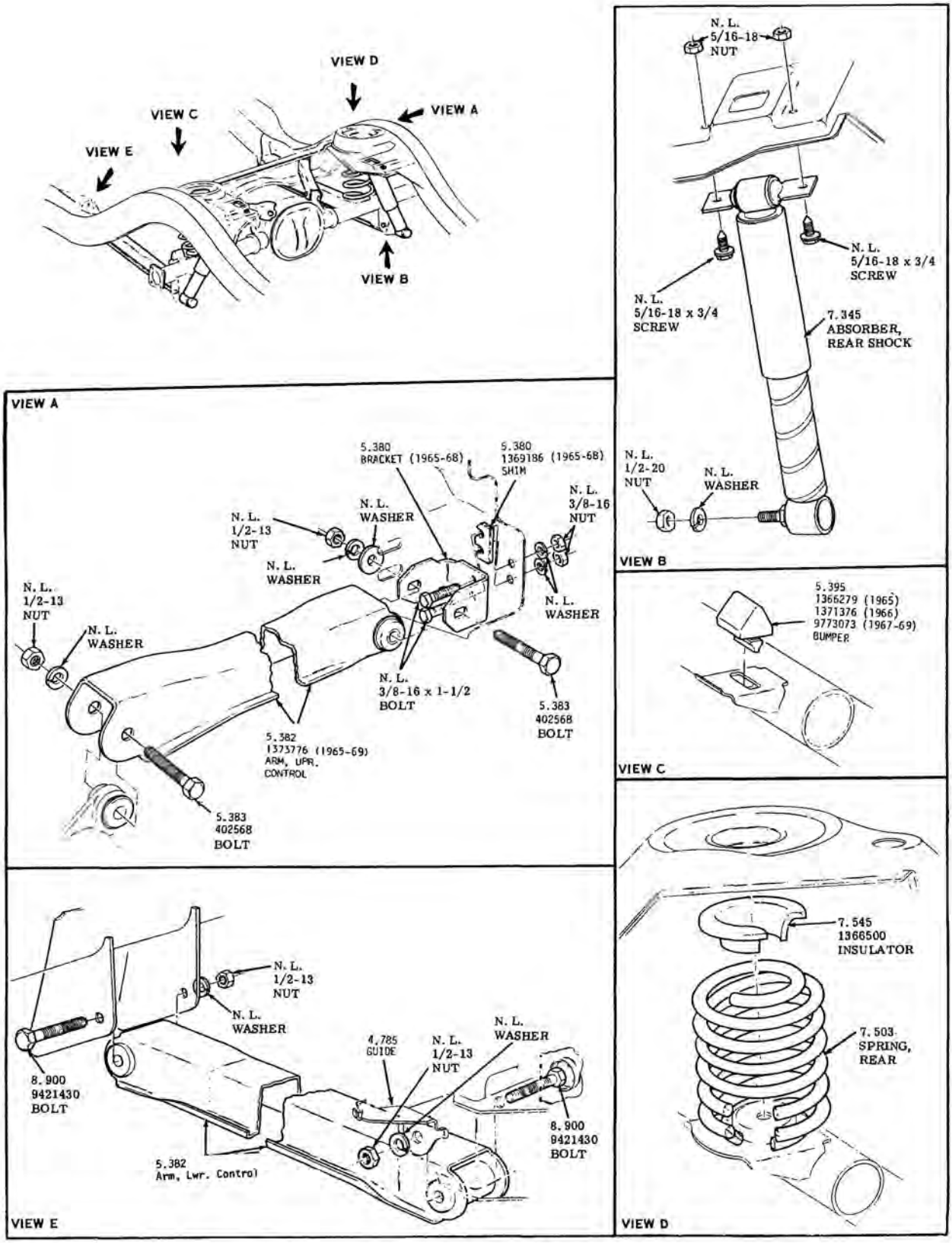

REAR WHEEL SUPENSION
1965-1970 LESABRE-WILDCAT-ELECTRA 225

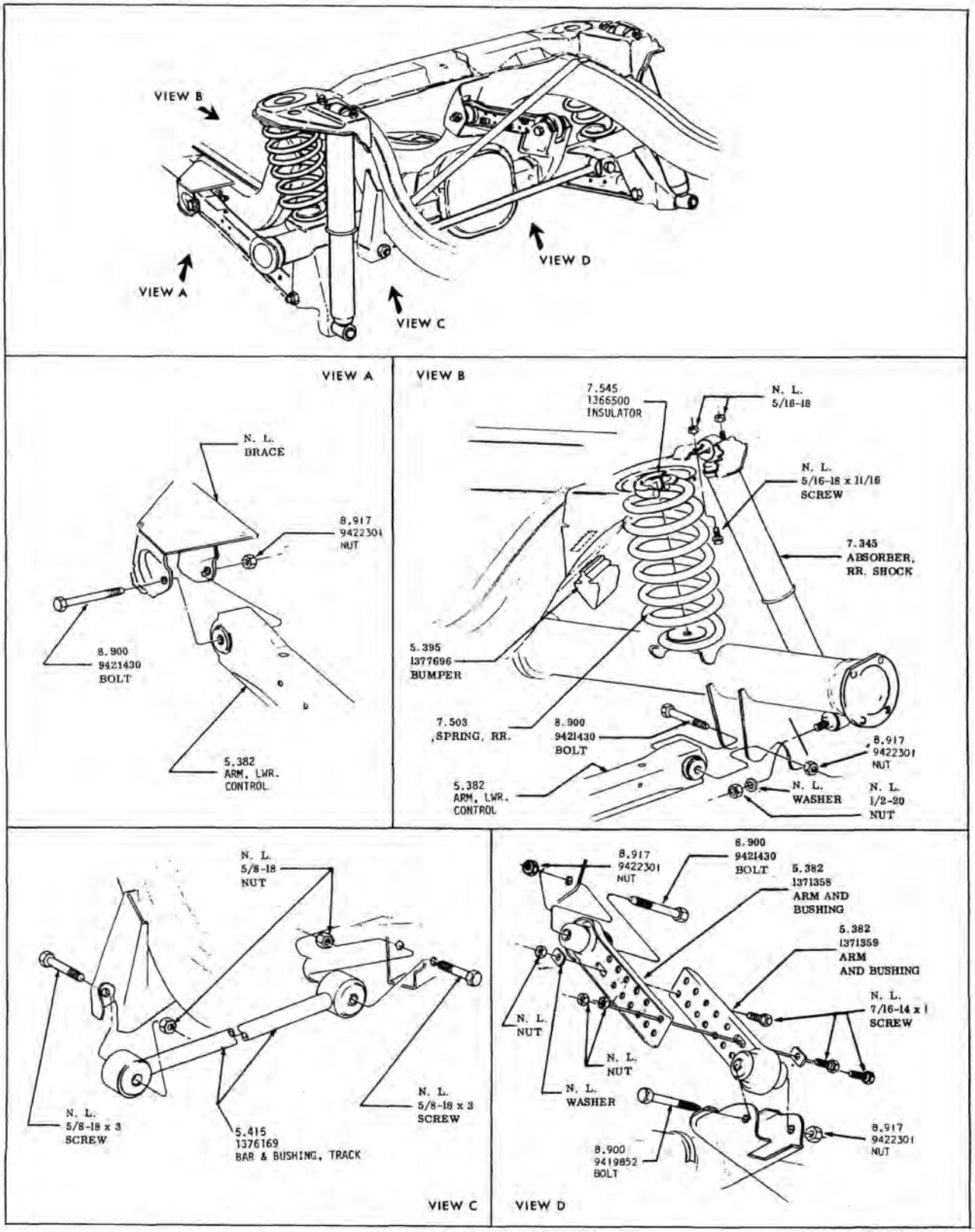

REAR SUSPENSION
1966-1970 —RIVIERA

REV. 6-1-67

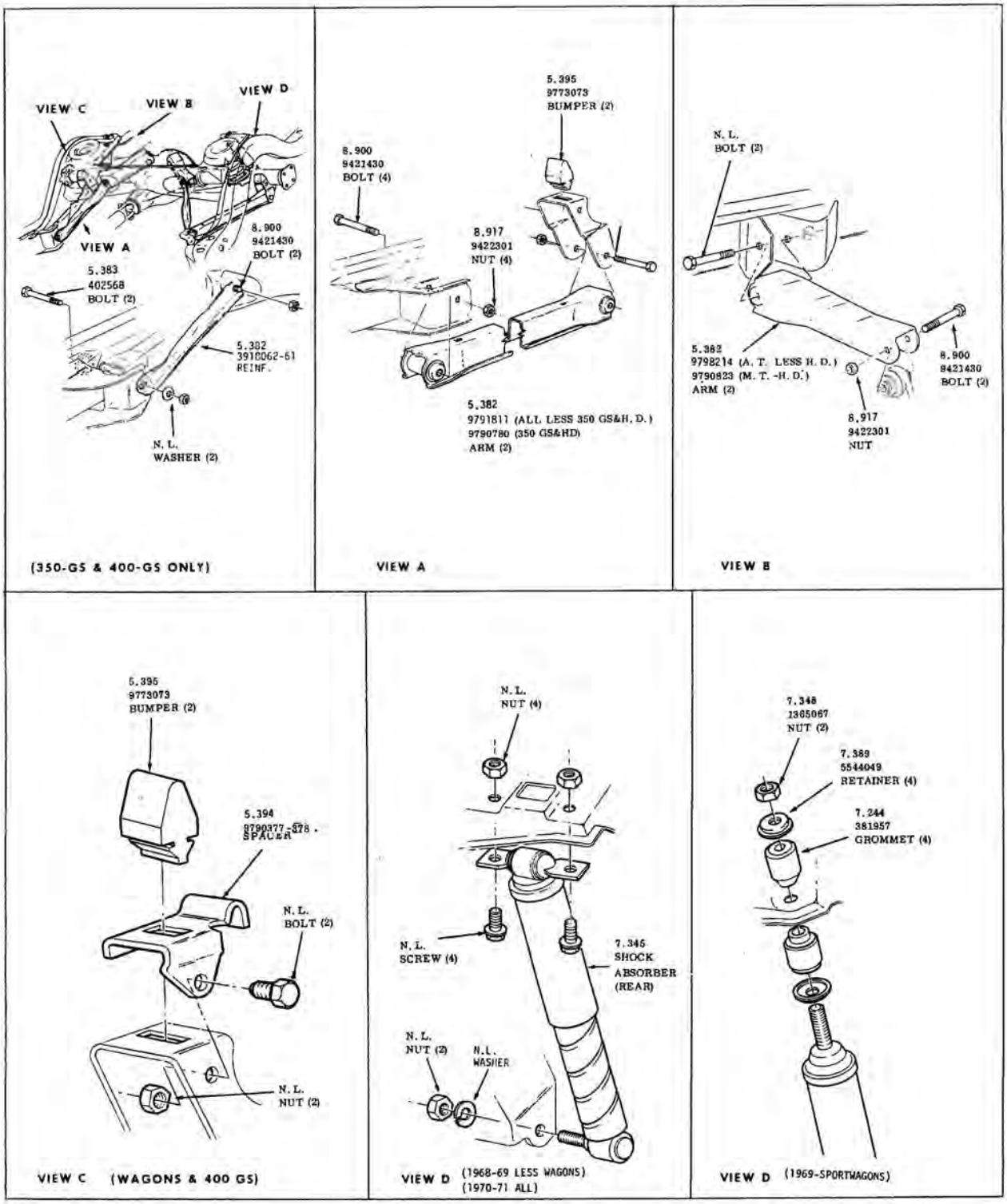

REAR SUSPENSION
1968-1972-30-4000

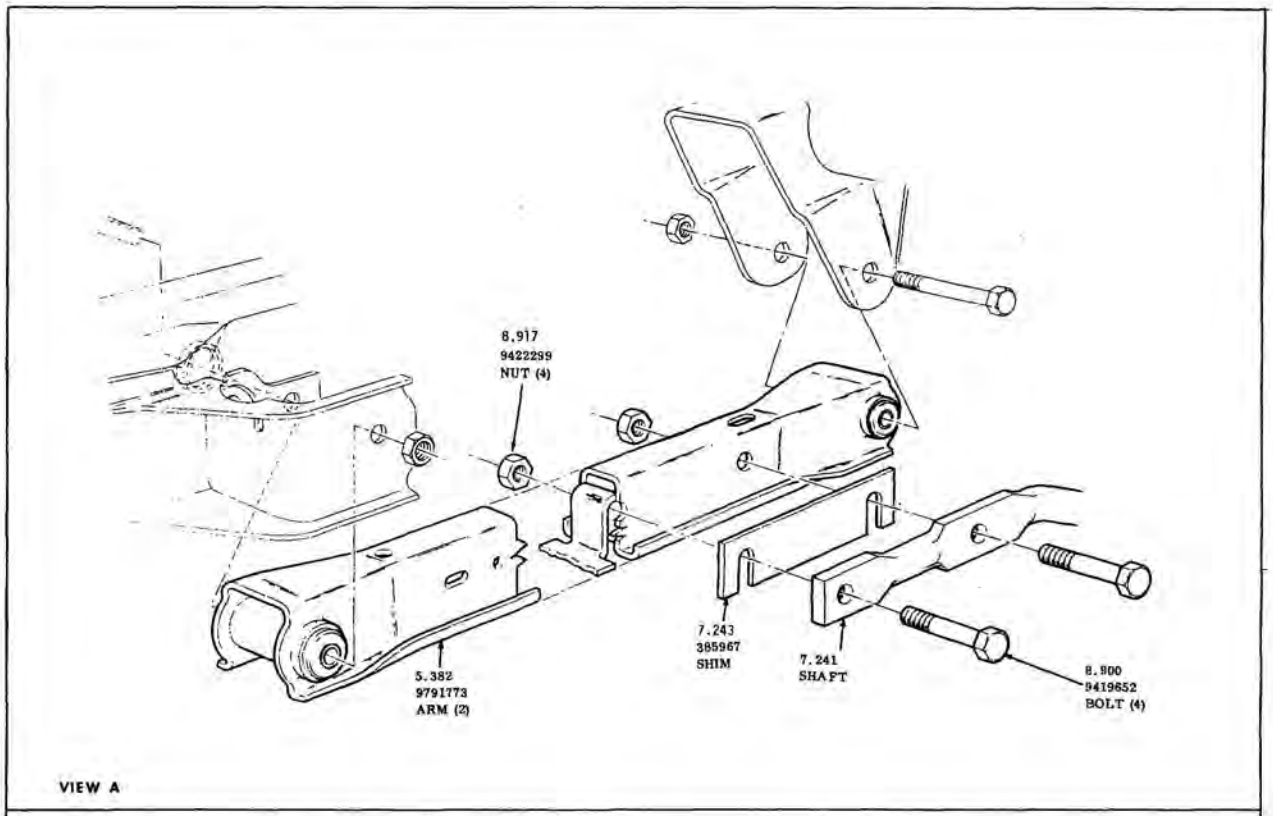

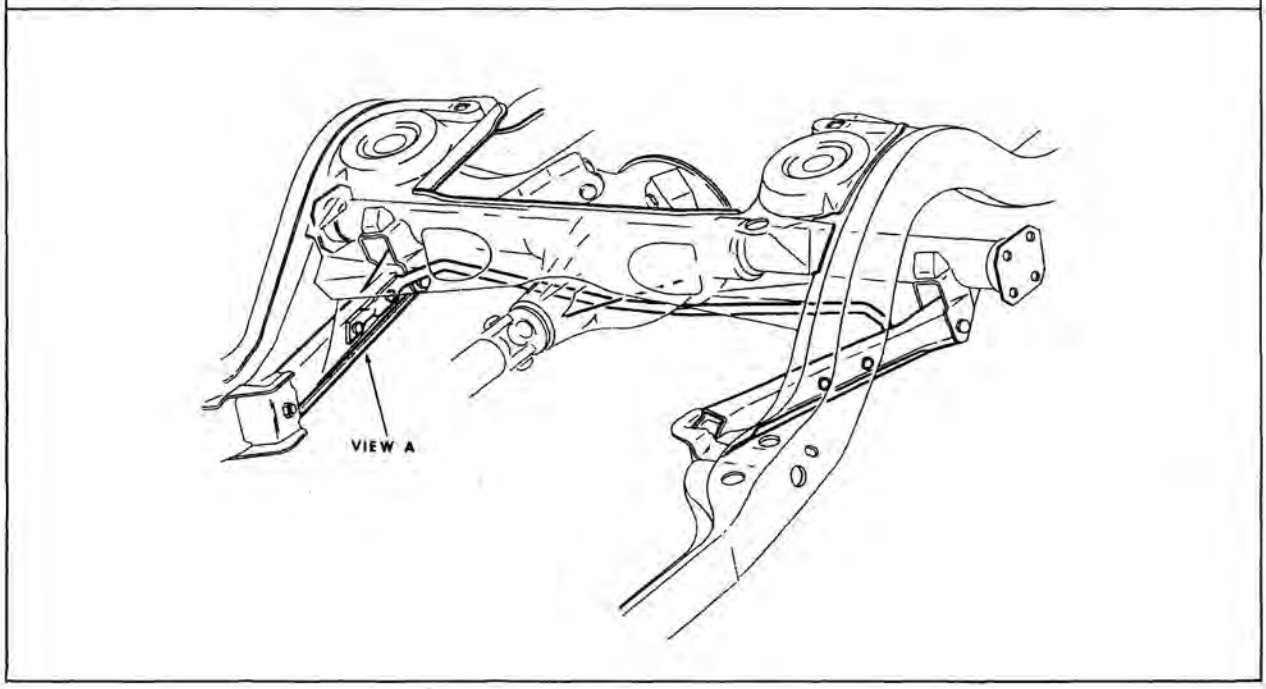

REAR SUSPENSION
"RALLY-PAC"
1968-1972 -GS 350 & GS 400

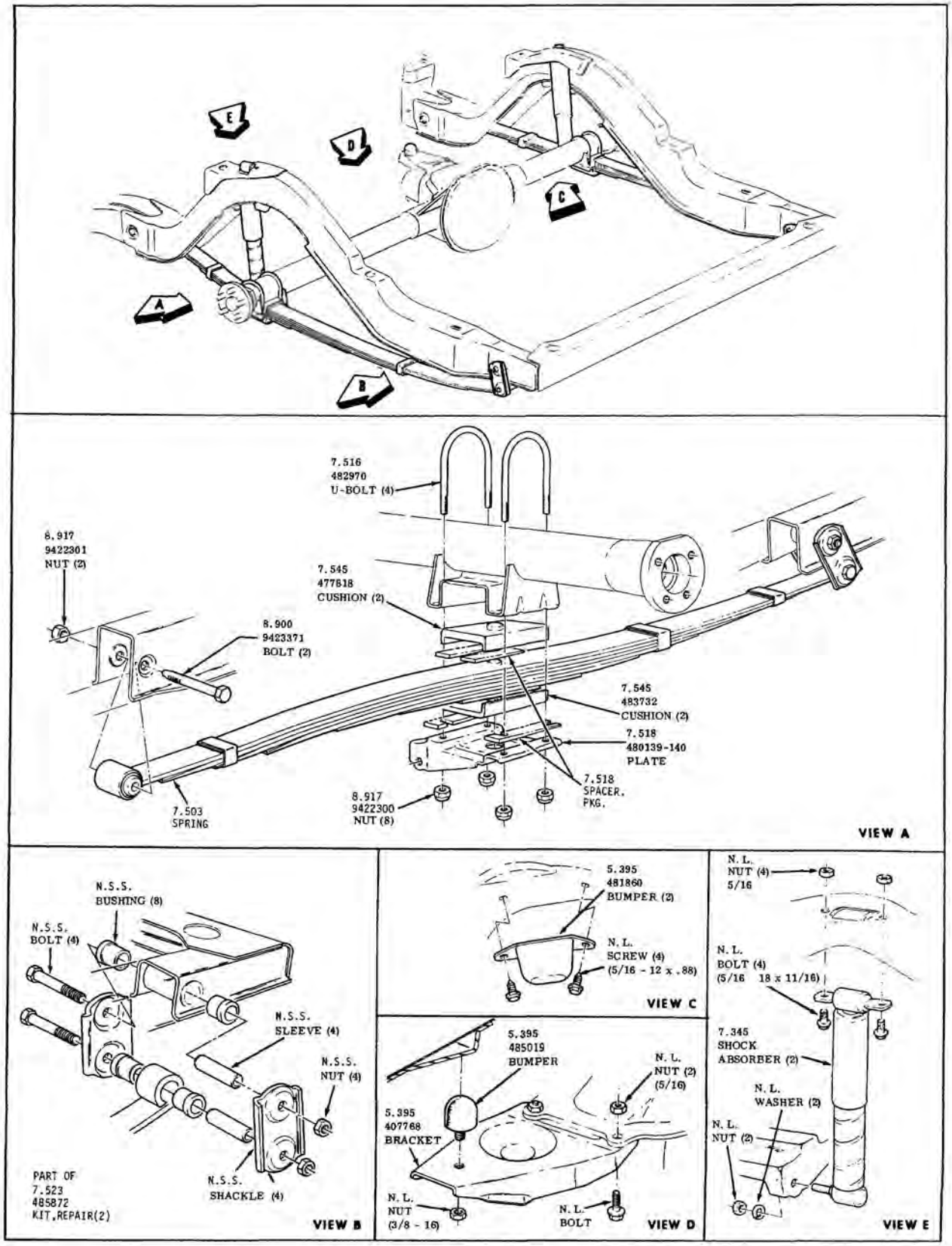

REAR SUSPENSION
1971- 1972 6035-45

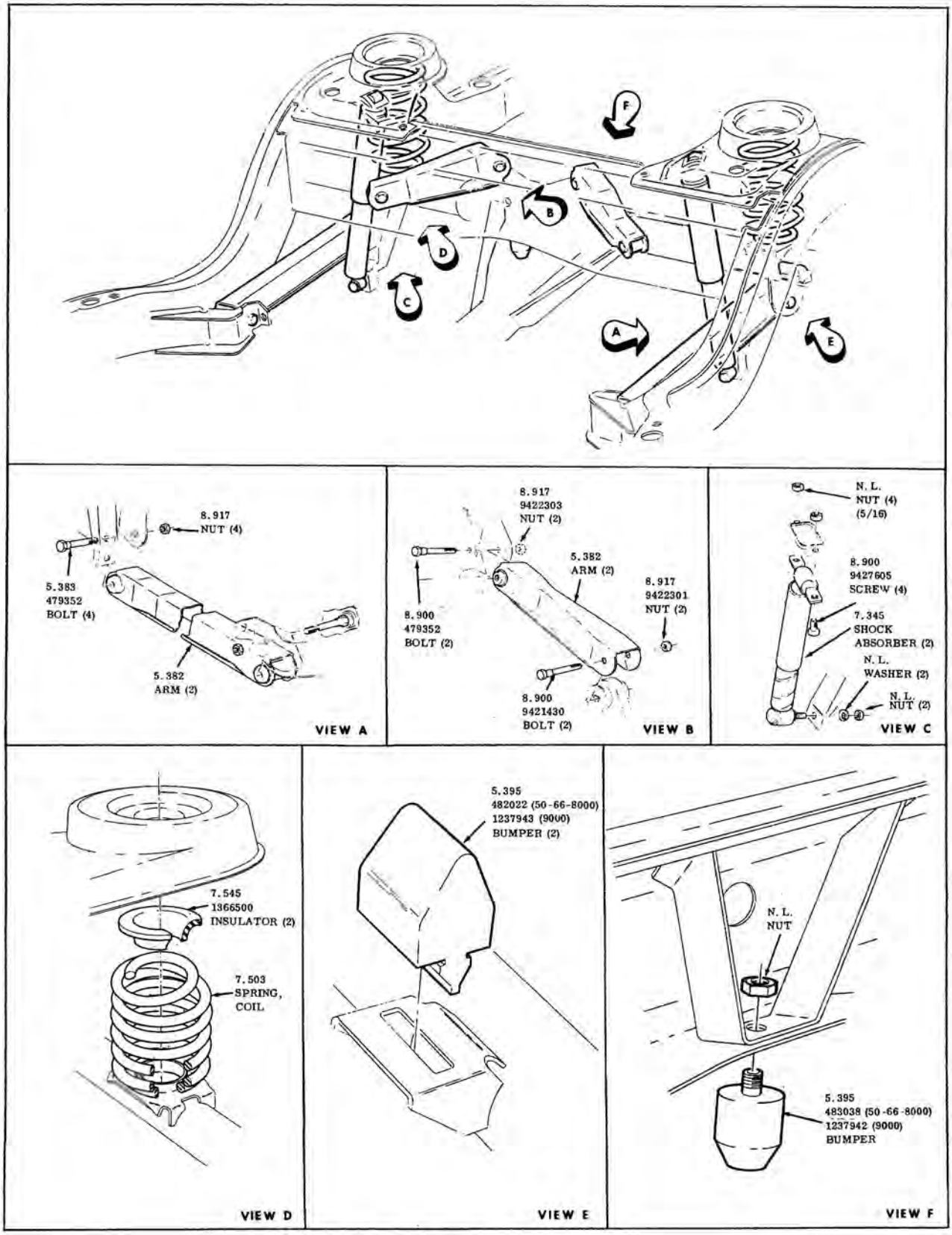

REAR WHEEL SUSPENSION
1971-1972 50-66-80-9000

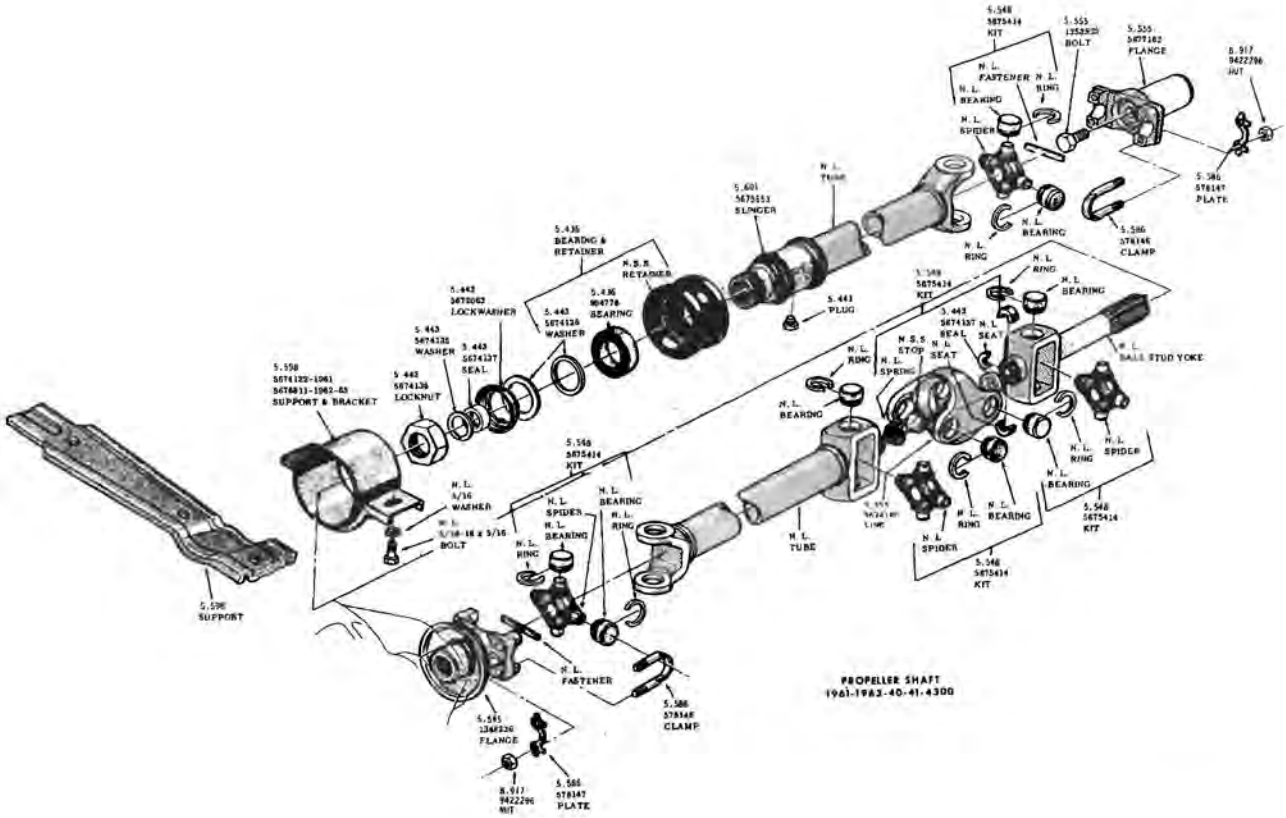
5.548
5875414
KIT
5.555
1358920
BOLT
5.555
5877162
FLANGE
8.917
9422296
NUT
N. L.
FASTENER
N. L.
RING
N. L.
BEARING
N. L.
SPIDER
5.586
578147
PLATE
N. L.
BEARING
N. L.
RING
5.586
578148
CLAMP
N. L.
TUBE
5.601
5875553
SLINGER
5.436
BEARING &
RETAINER
N.S.S.
RETAINER
5.443
5872062
LOCKWASHER
5.443
5874126
WASHER
5.436
904778
BEARING
5.443
PLUG
5.443
5874135
WASHER
5.443
5874137
SEAL
5.558
5874122-1961
5876811-1962-63
SUPPORT & BRACKET
5.443
5874136
LOCKNUT
N. L.
RING
N. L.
BEARING
N.S.S.
STOP
N. L.
SPRING
N. L.
SEAT
N. L.
BALL STUD YOKE
N. L.
5/16
WASHER
N. L.
5/16-18 x 5/16
BOLT
5.548
5875414
KIT
N. L.
SPIDER
N. L.
BEARING
N. L.
RING
N. L.
TUBE
5.595
SUPPORT
N. L.
FASTENER
5.586
578148
CLAMP
5.585
1348326
FLANGE
8.917
9422296
NUT
5.586
578147
PLATE
PROPELLER SHAFT
1961-1962-40-41-4300

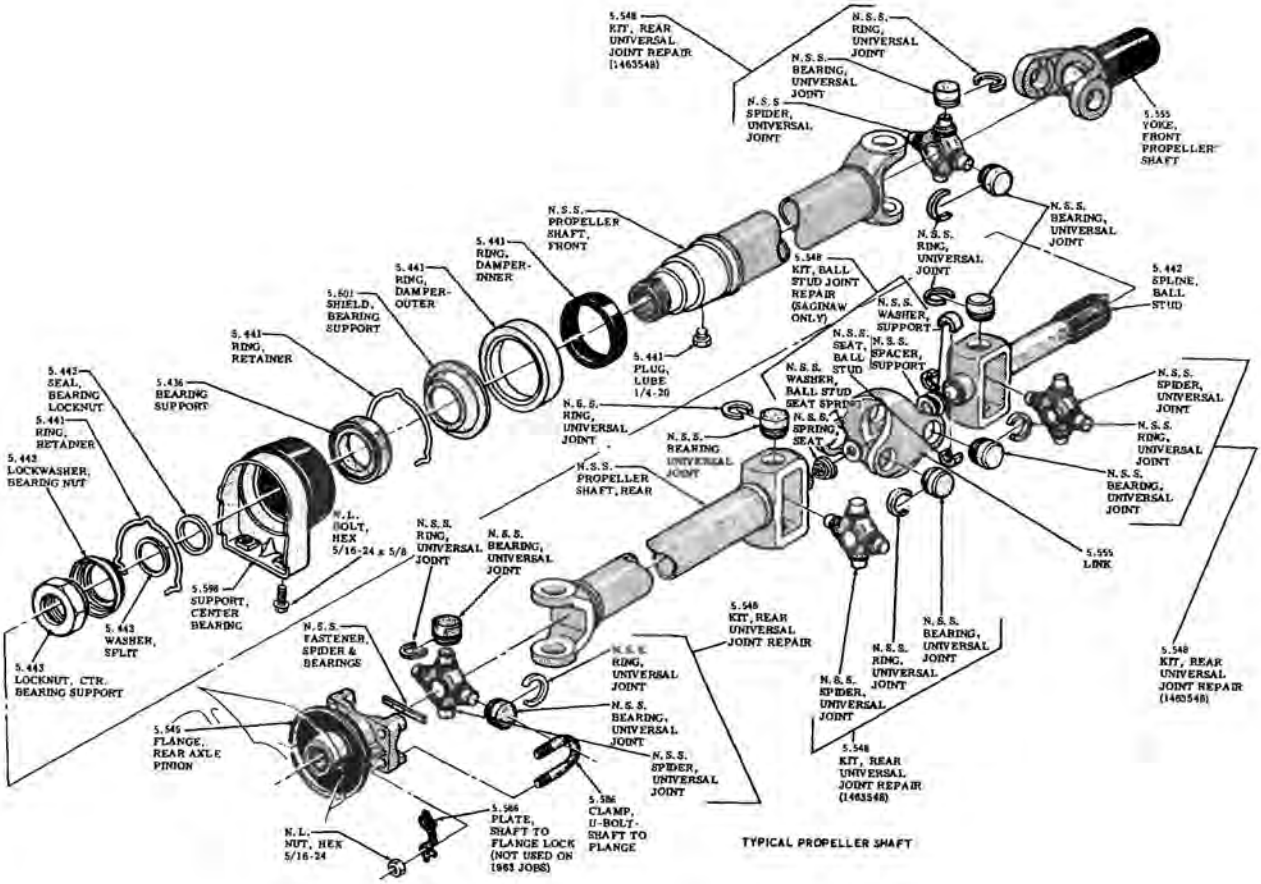

TYPICAL PROPELLER SHAFT

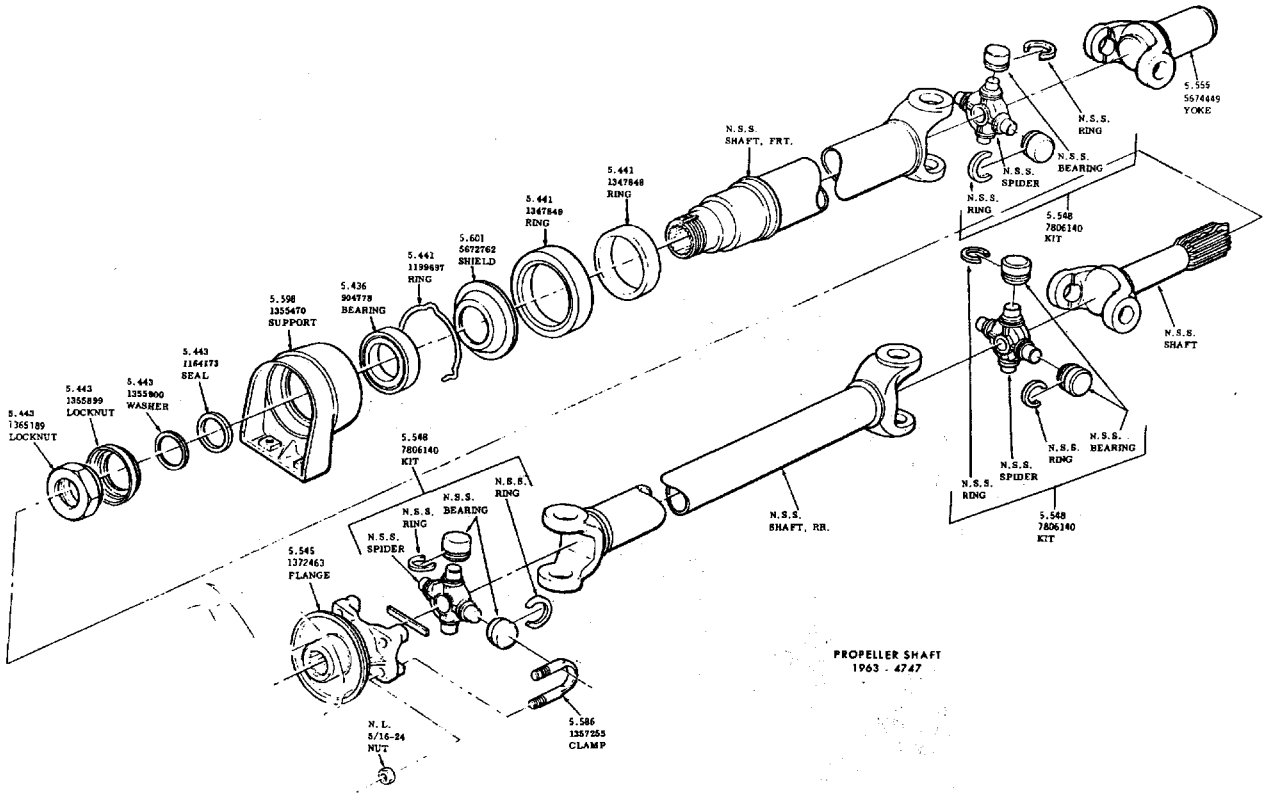
5.443
1365189
LOCKNUT
5.443
1365899
LOCKNUT
5.443
1355800
WASHER
5.443
1164173
SEAL
5.598
1355470
SUPPORT
5.436
904778
BEARING
5.441
1199697
RING
5.601
5672762
SHIELD
5.441
1347848
RING
5.441
1347848
RING
N.S.S.
SHAFT, FRT.
5.559
5674449
YOKE
N.S.S.
RING
N.S.S.
BEARING
N.S.S.
SPIDER
N.S.S.
RING
5.548
7806140
KIT
N.S.S.
SHAFT
N.S.S.
BEARING
N.S.S.
RING
N.S.S.
SPIDER
N.S.S.
RING
5.548
7806140
KIT
N.S.S.
SHAFT, RR.
5.548
7806140
KIT
N.S.S.
RING
N.S.S.
BEARING
N.S.S.
RING
N.S.S.
SPIDER
5.545
1372463
FLANGE
N. L.
5/16-24
NUT
5.586
1357255
CLAMP
PROPELLER SHAFT
1963 - 4747

A. PART OF 5.442 KIT, REAR PROP. SHAFT BALL STUD SPLINE + BALL STUD SEAT
B. PART OF 5.442 KIT, UNIVERSAL JOINT REPAIR
C. SERVICED ONLY WITH 5.441 SHAFT, PROP. FRT. + REAR (COMPLETE)

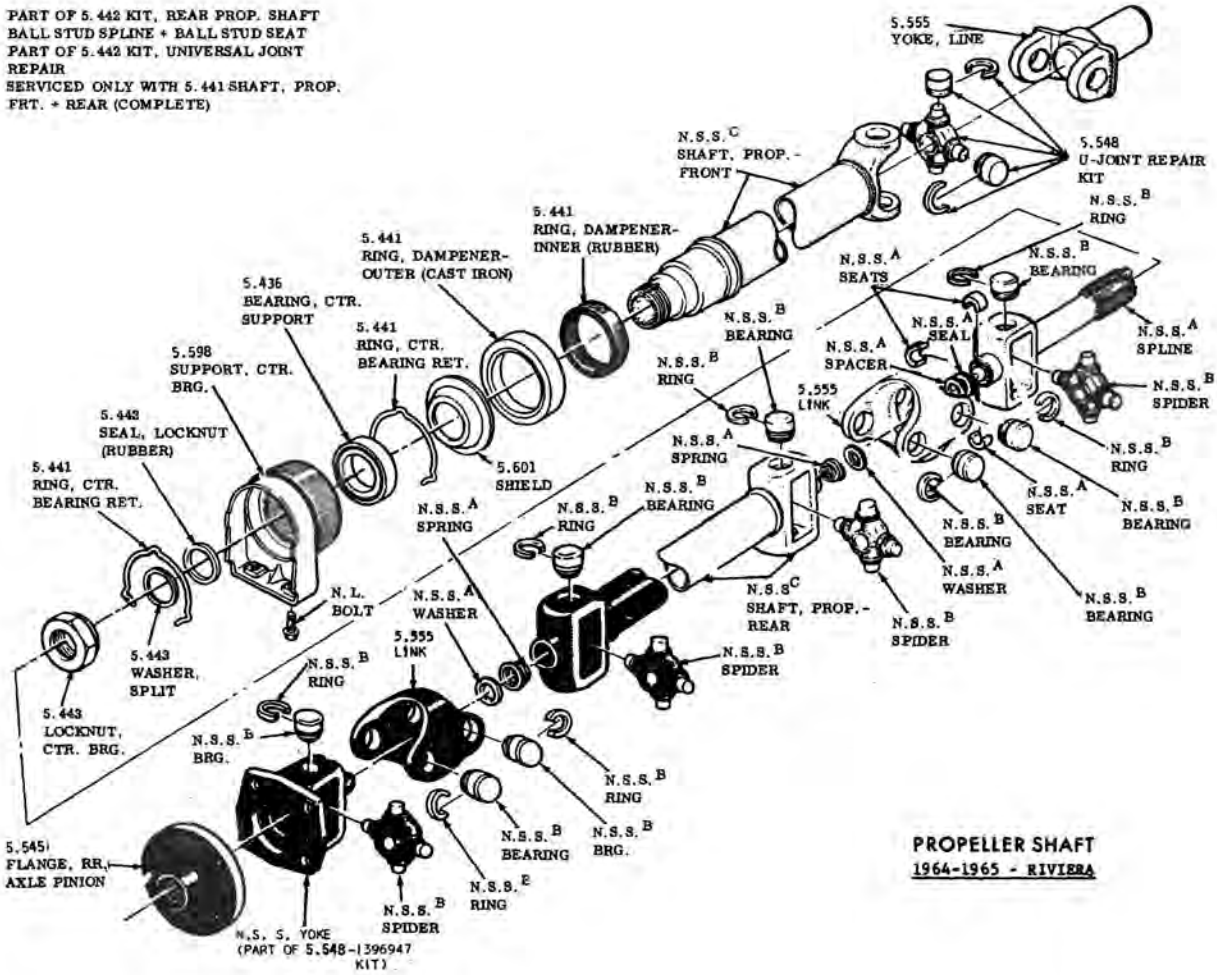

PROPELLER SHAFT
1964-1965 - RIVIERA

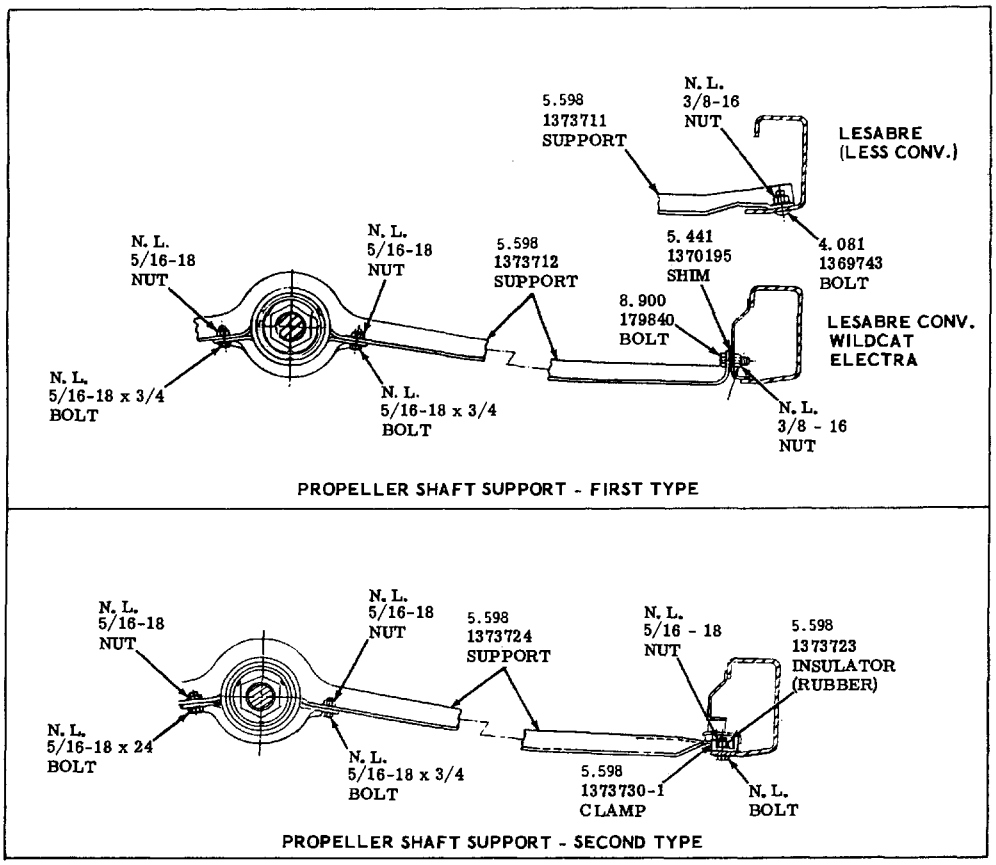

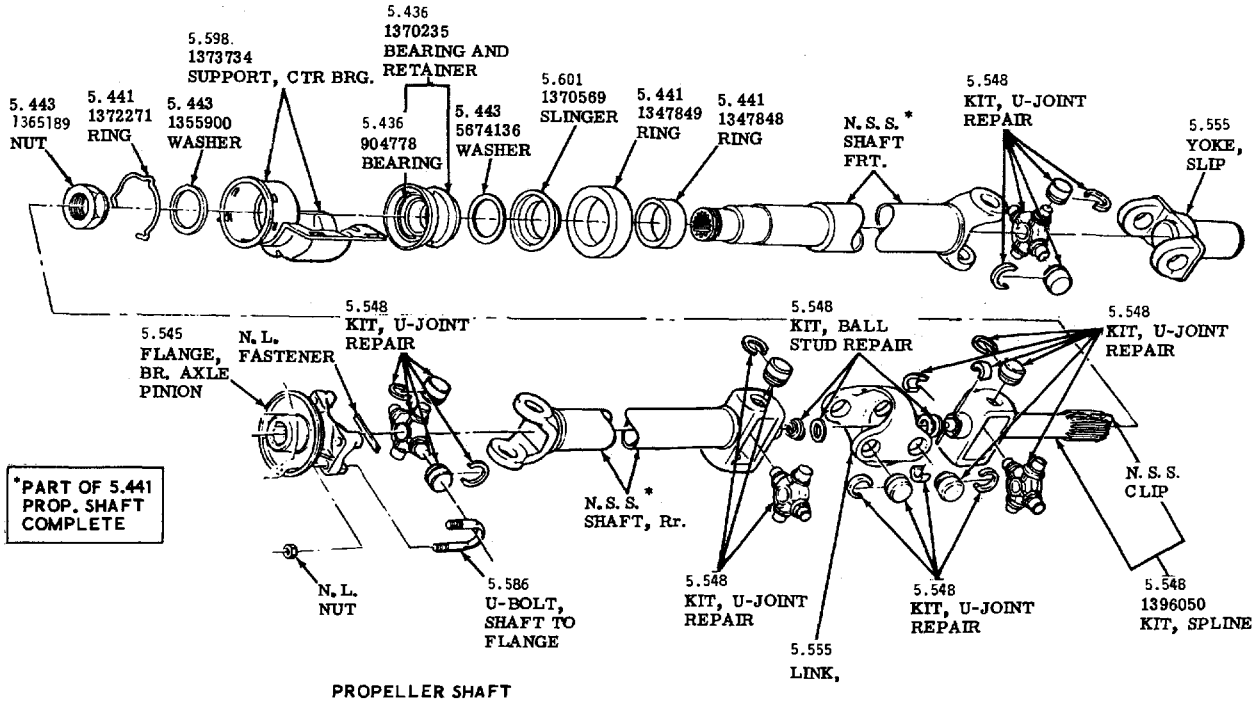

PROPELLER SHAFT
1965-LESABRE-WILDCAT-ELECTRA 225

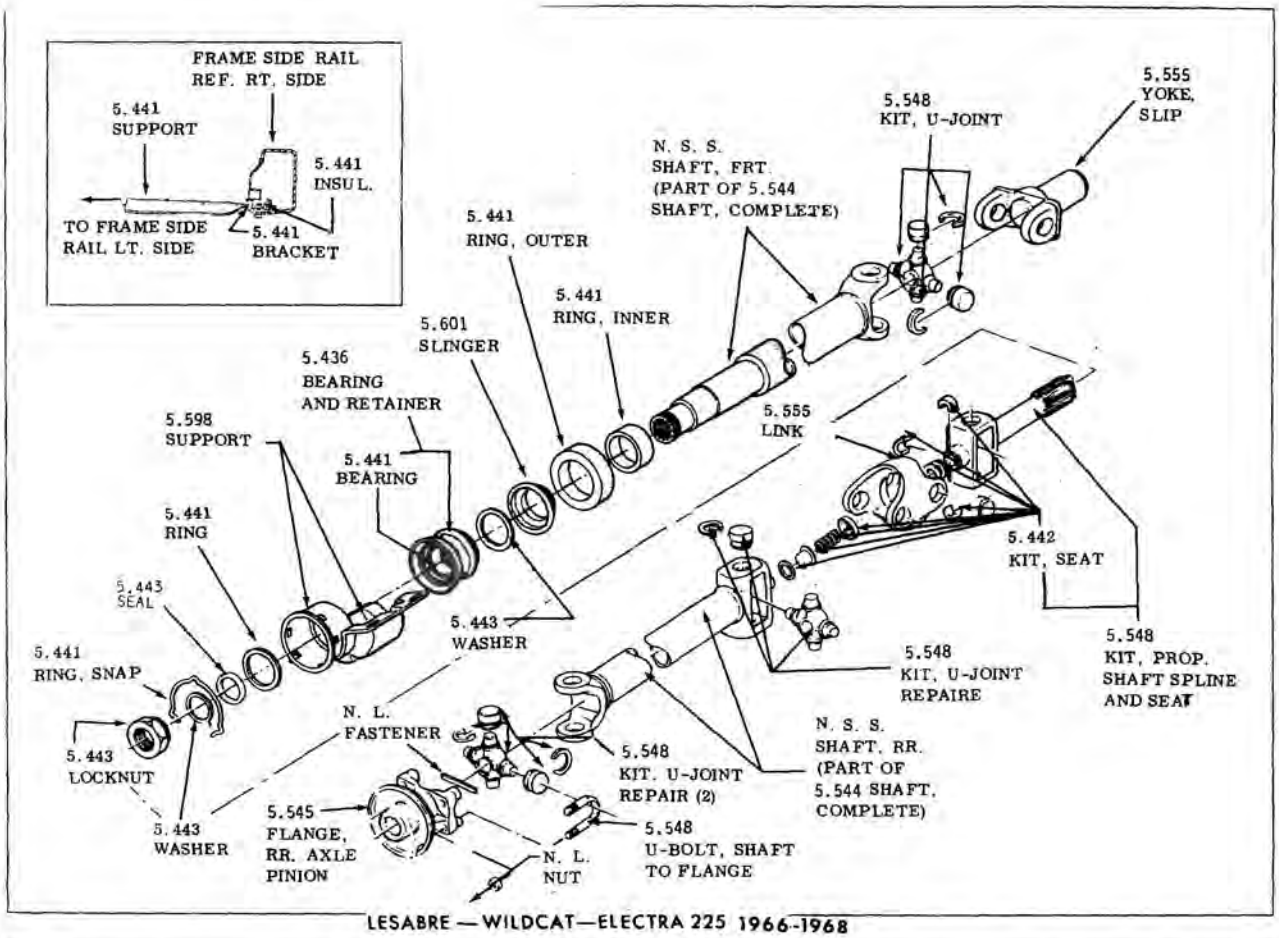

LESABRE — WILDCAT—ELECTRA 225 1966-1968

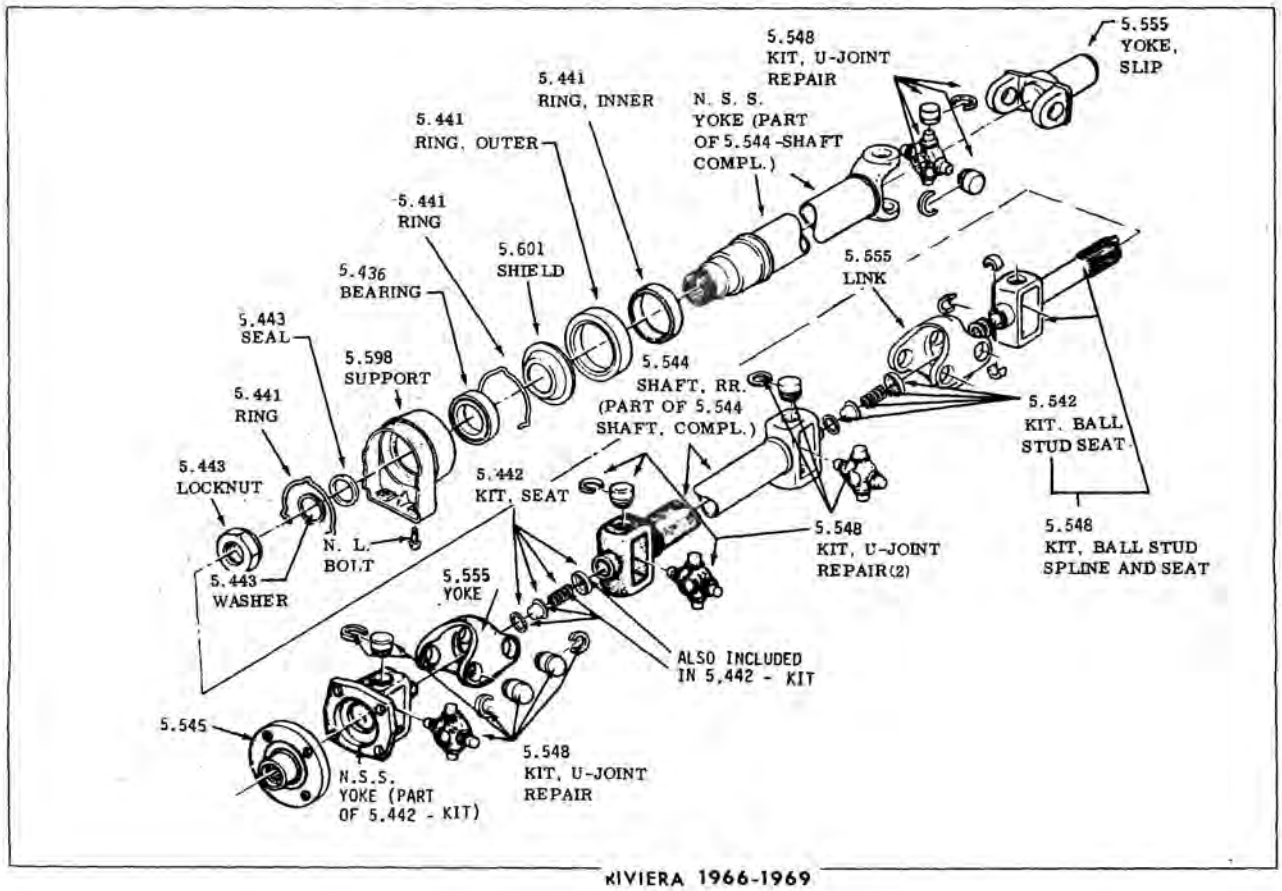

RIVIERA 1966-1969

PROPELLOR SHAFTS

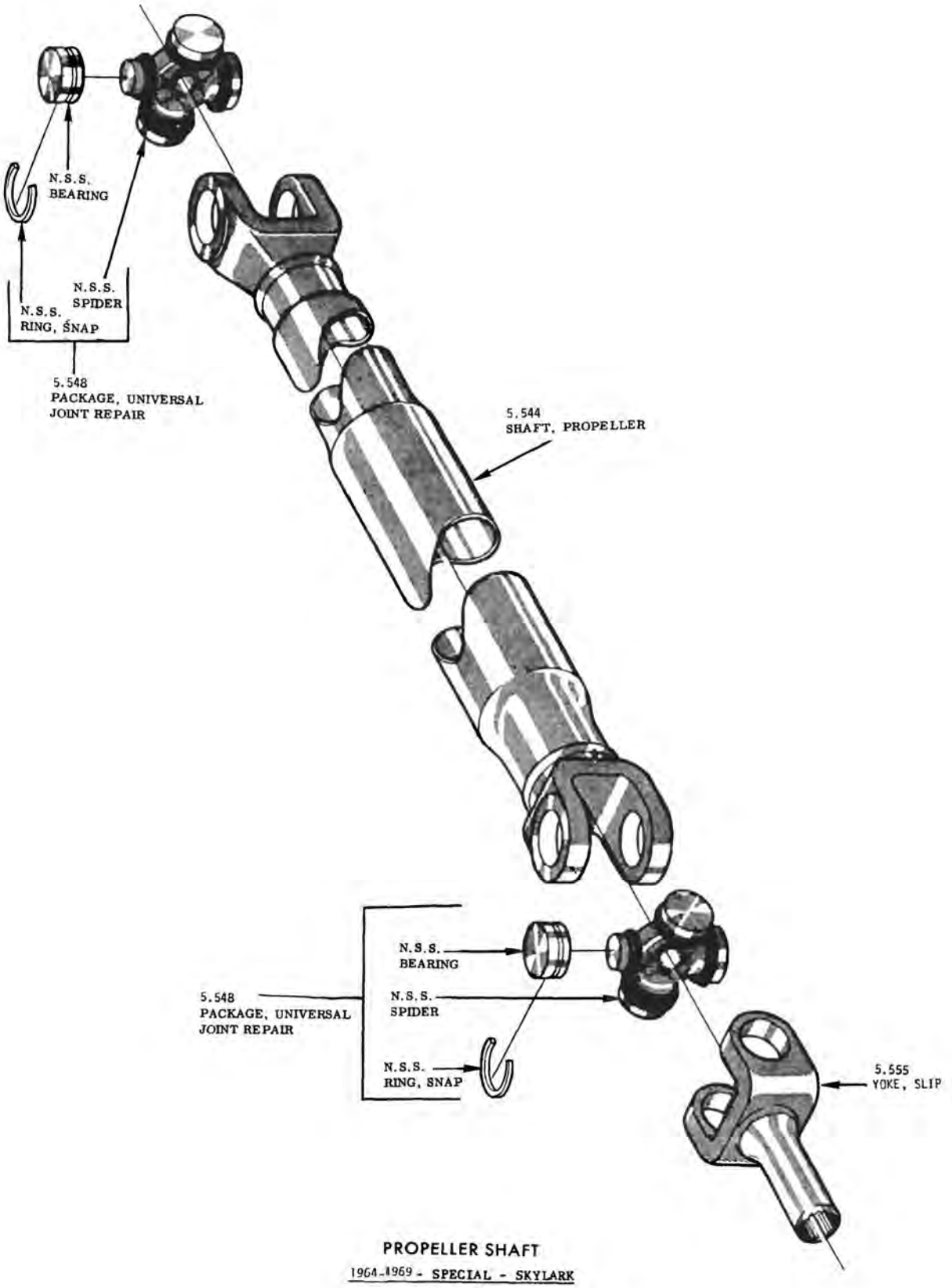

PROPELLER SHAFT

1964-1969 - SPECIAL - SKYLARK

TYPICAL
1969-50-60-8000

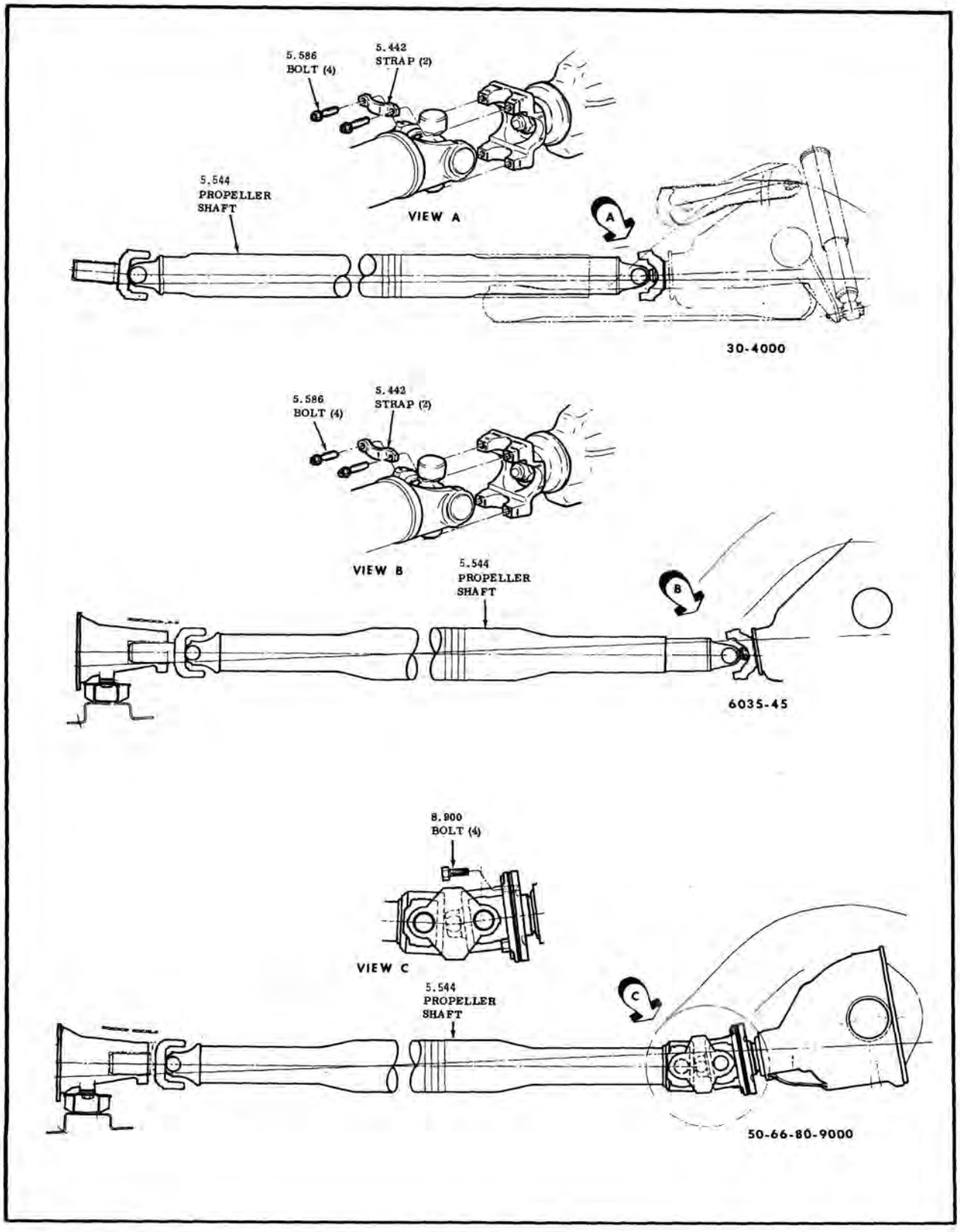

PROPELLER SHAFT
1972- ALL

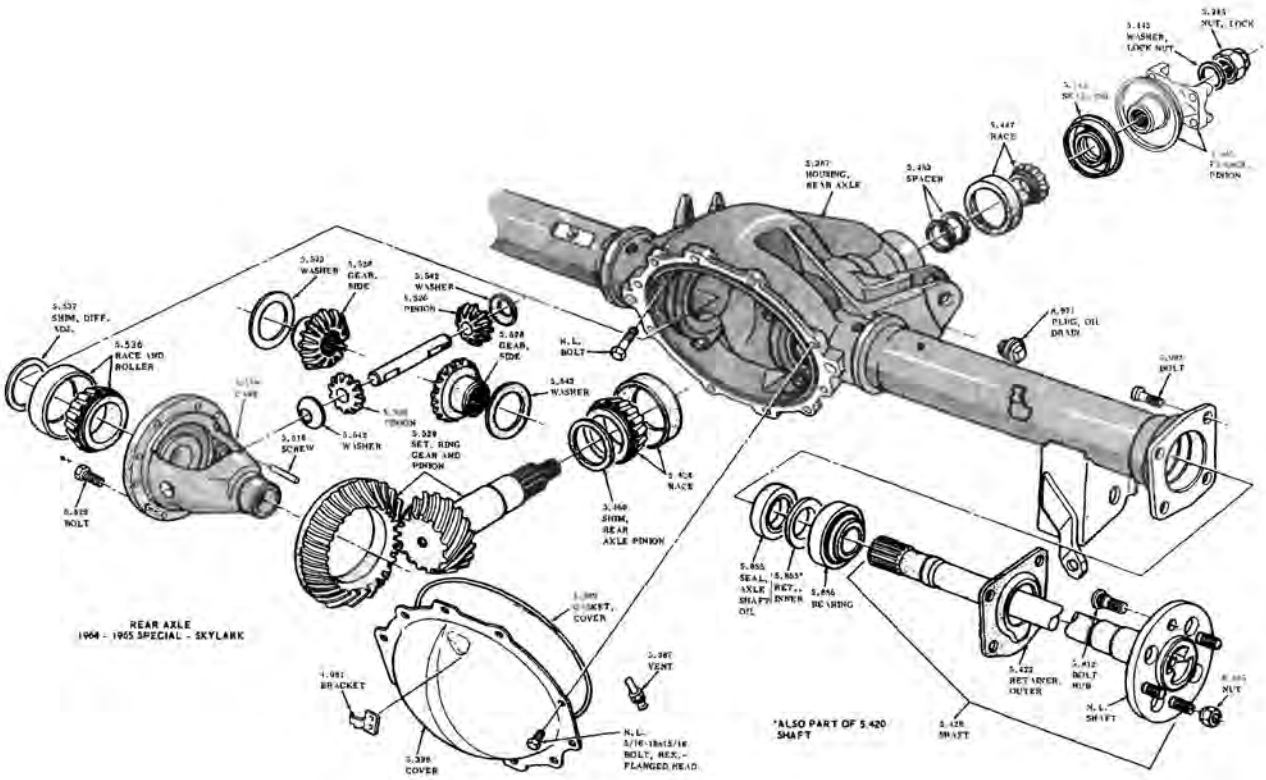

REAR AXLE
1964 - 1965 SPECIAL - SKYLARK

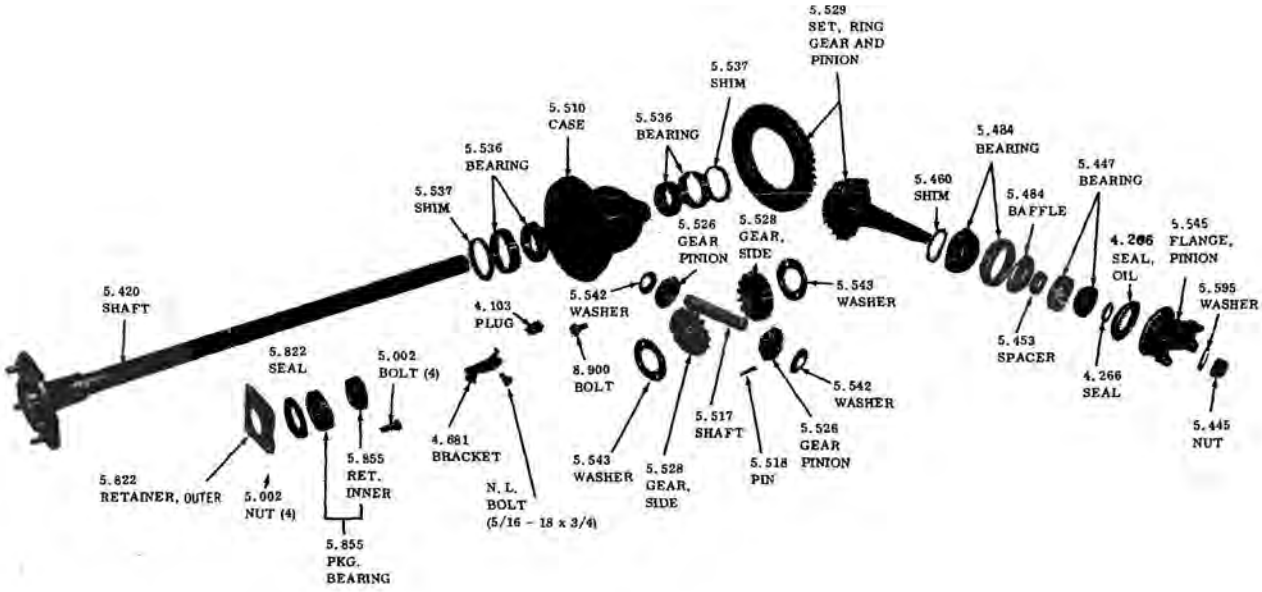

(TYPICAL)
REAR AXLE-INTERNAL PARTS
1970-1972 30-4000

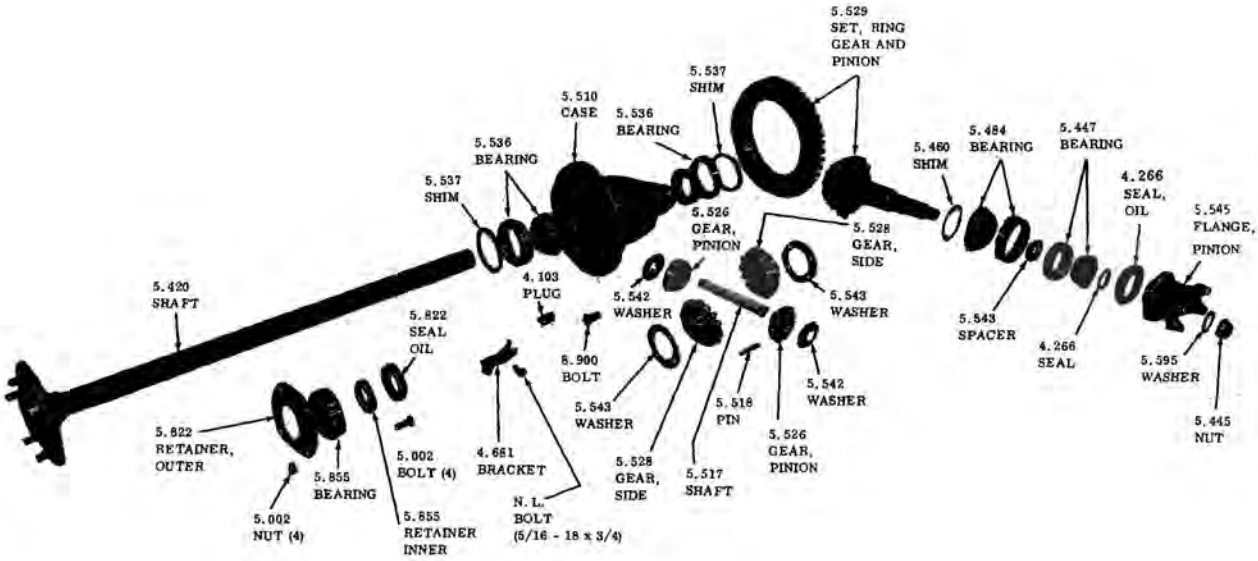

(TYPICAL)
REAR AXLE-INTERNAL PARTS
1970- 1972 50-60-8000

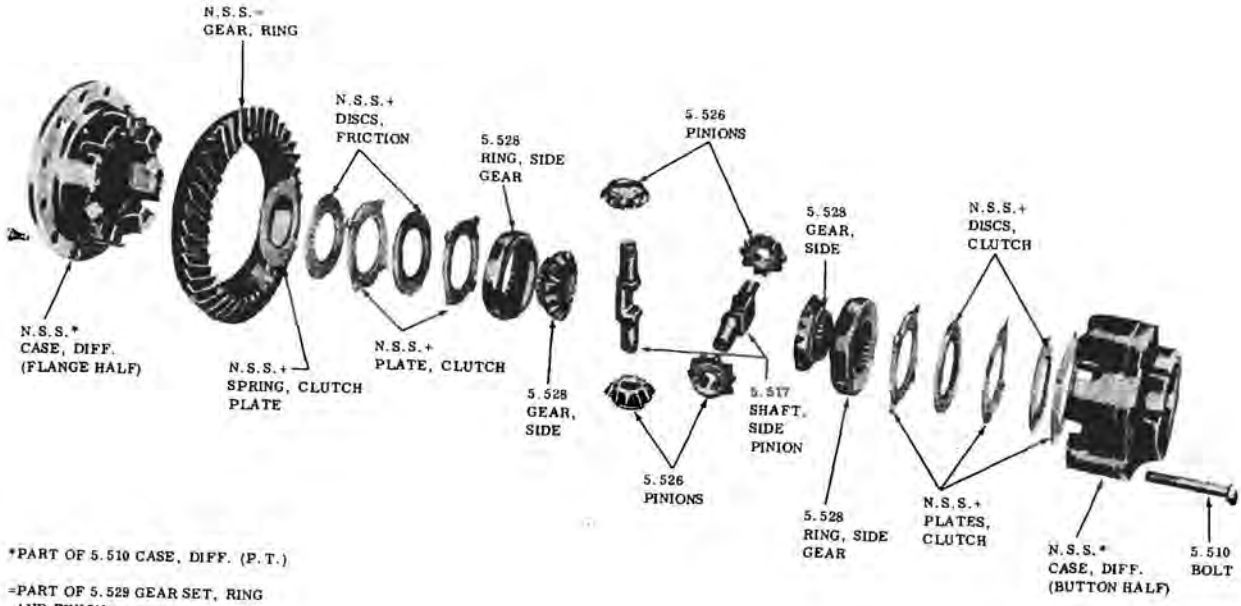

*PART OF 5.510 CASE, DIFF. (P.T.)

=PART OF 5.529 GEAR SET, RING AND PINION

+PART OF 5.528 CLUTCH PLATE AND DISC PACKAGE

POSITIVE TRACTION DIFFERENTIAL
1959-1965

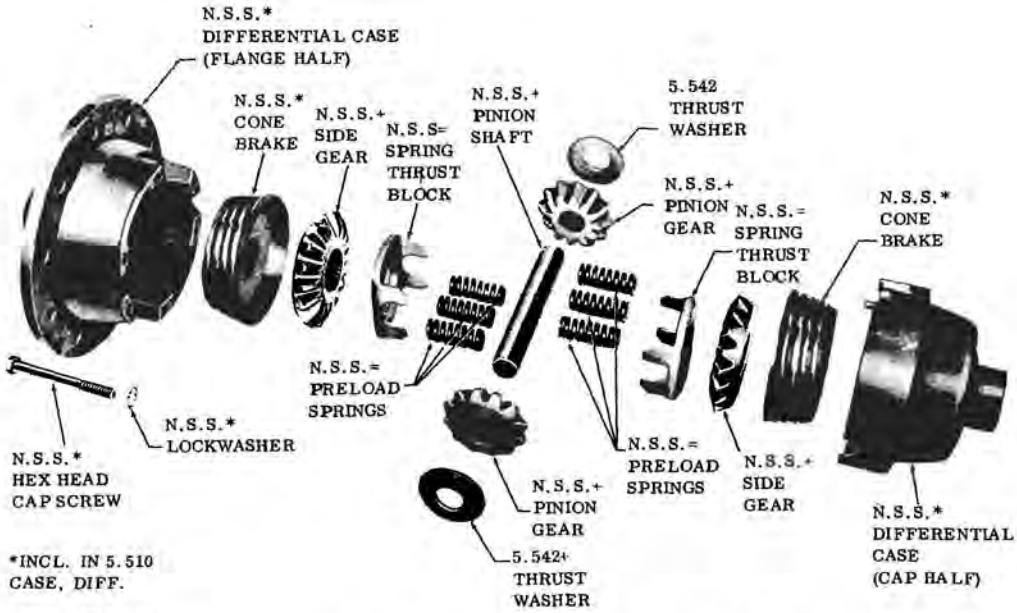

*INCL. IN 5.510 CASE, DIFF.

+INCL. IN 5.528 GEAR SET. DIFF.

=INCL. IN 5.528 RETAINER AND SPRING PRELOAD KIT

SPECIAL - SKYLARK - SKYLARK G.S. - LESABRE

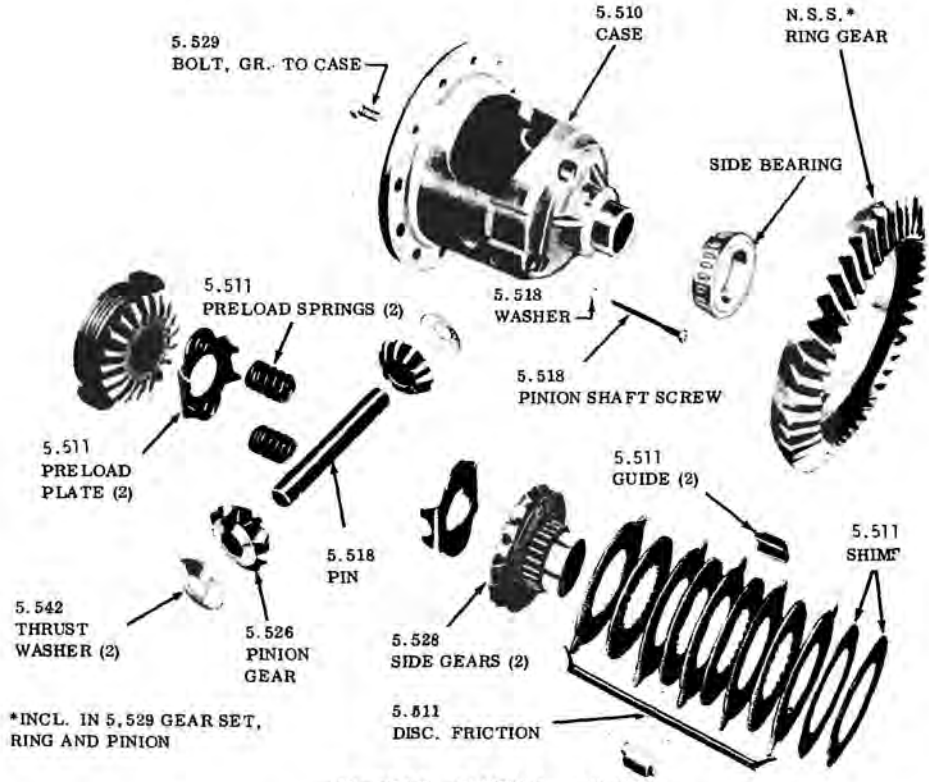

*INCL. IN 5.529 GEAR SET, RING AND PINION

WILDCAT - ELECTRA - RIVIERA
1966-1967 - POSITIVE TRACTION DIFFERENTIALS

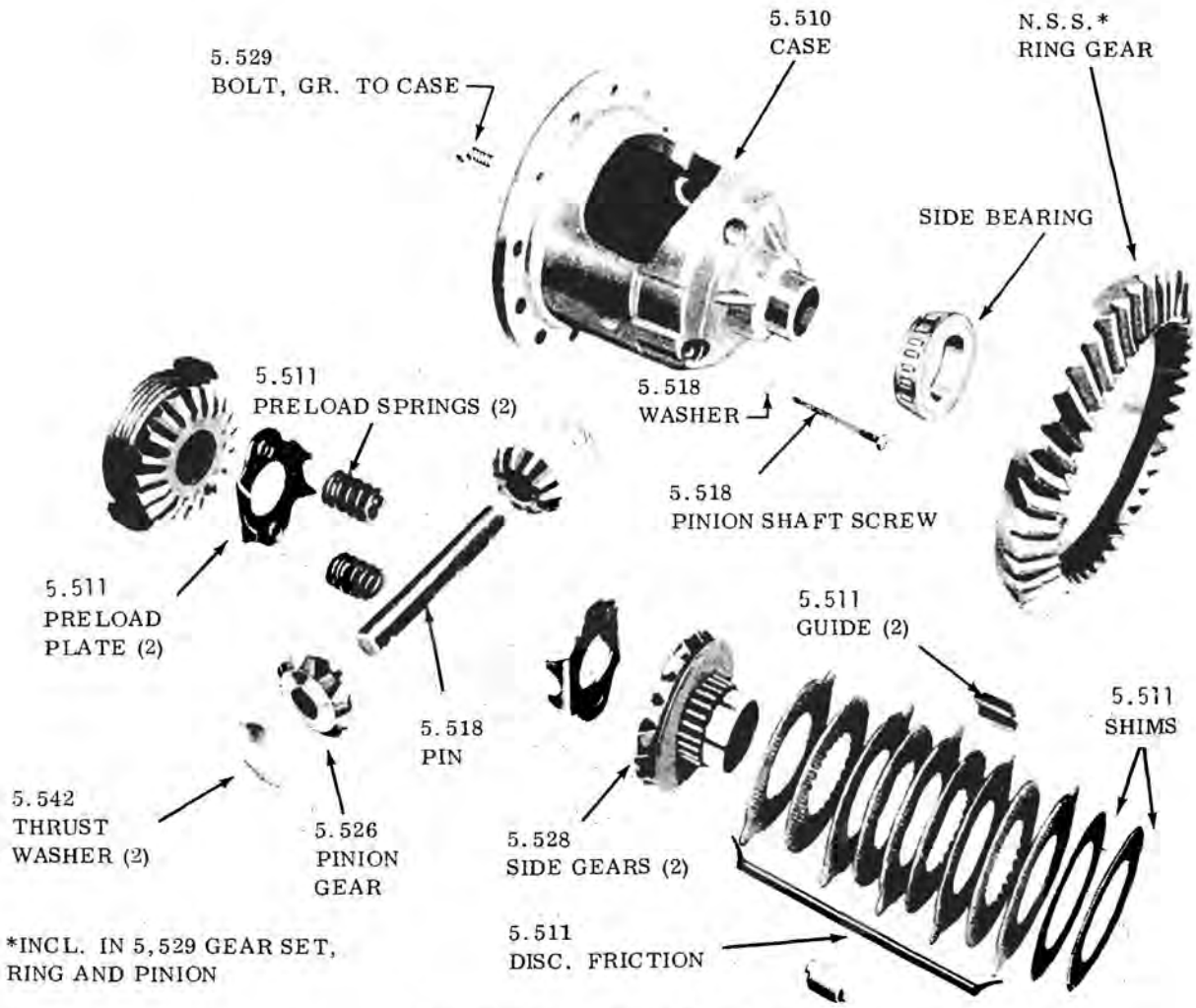

WILDCAT - ELECTRA - RIVIERA
1966-69 - POSITIVE TRACTION DIFFERENTIALS

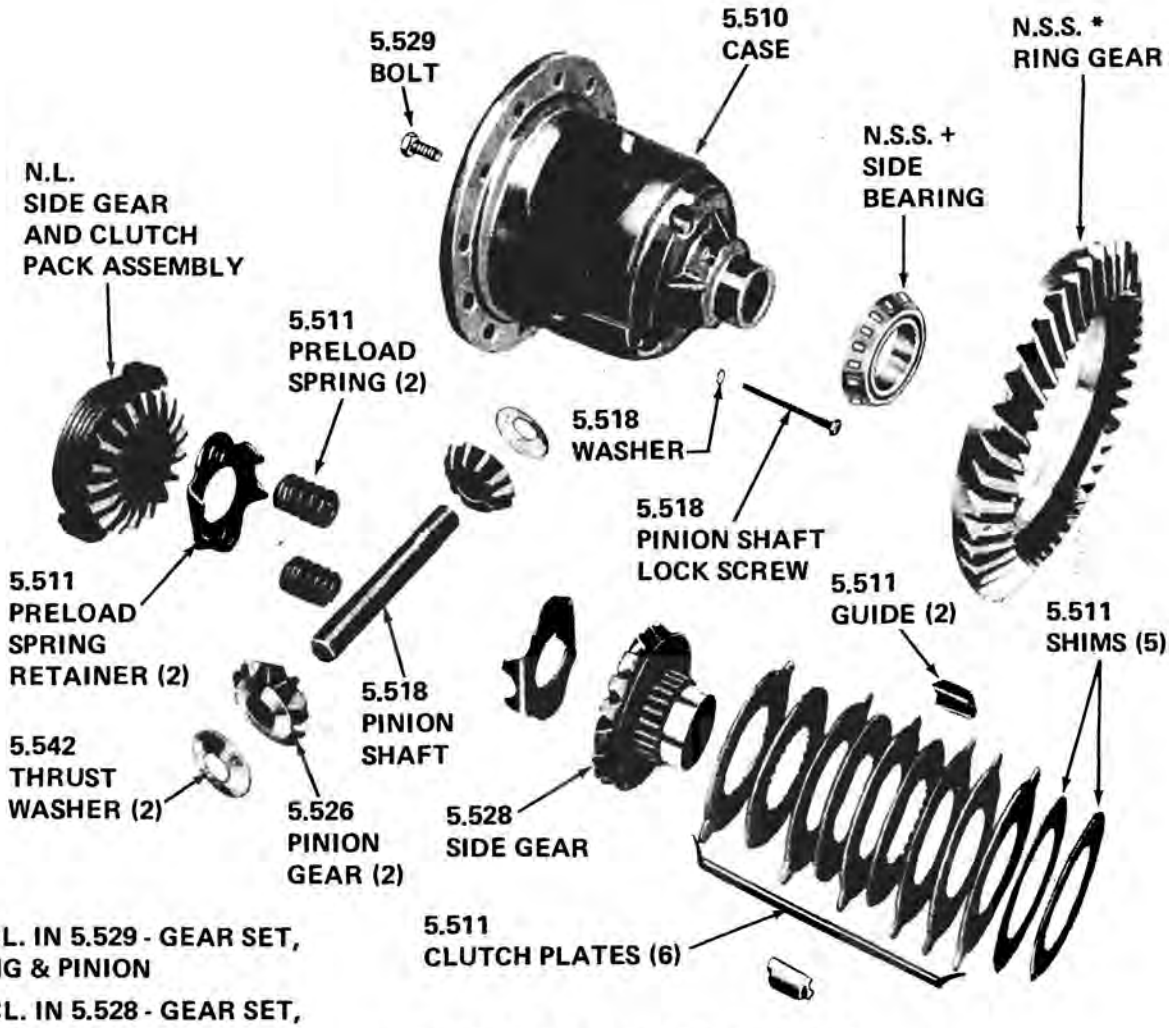

*INCL. IN 5.529 - GEAR SET, RING & PINION

+INCL. IN 5.528 - GEAR SET, DIFF,

POSITIVE TRACTION DIFFERENTIAL
1970 - 50 60 - 80 -9000

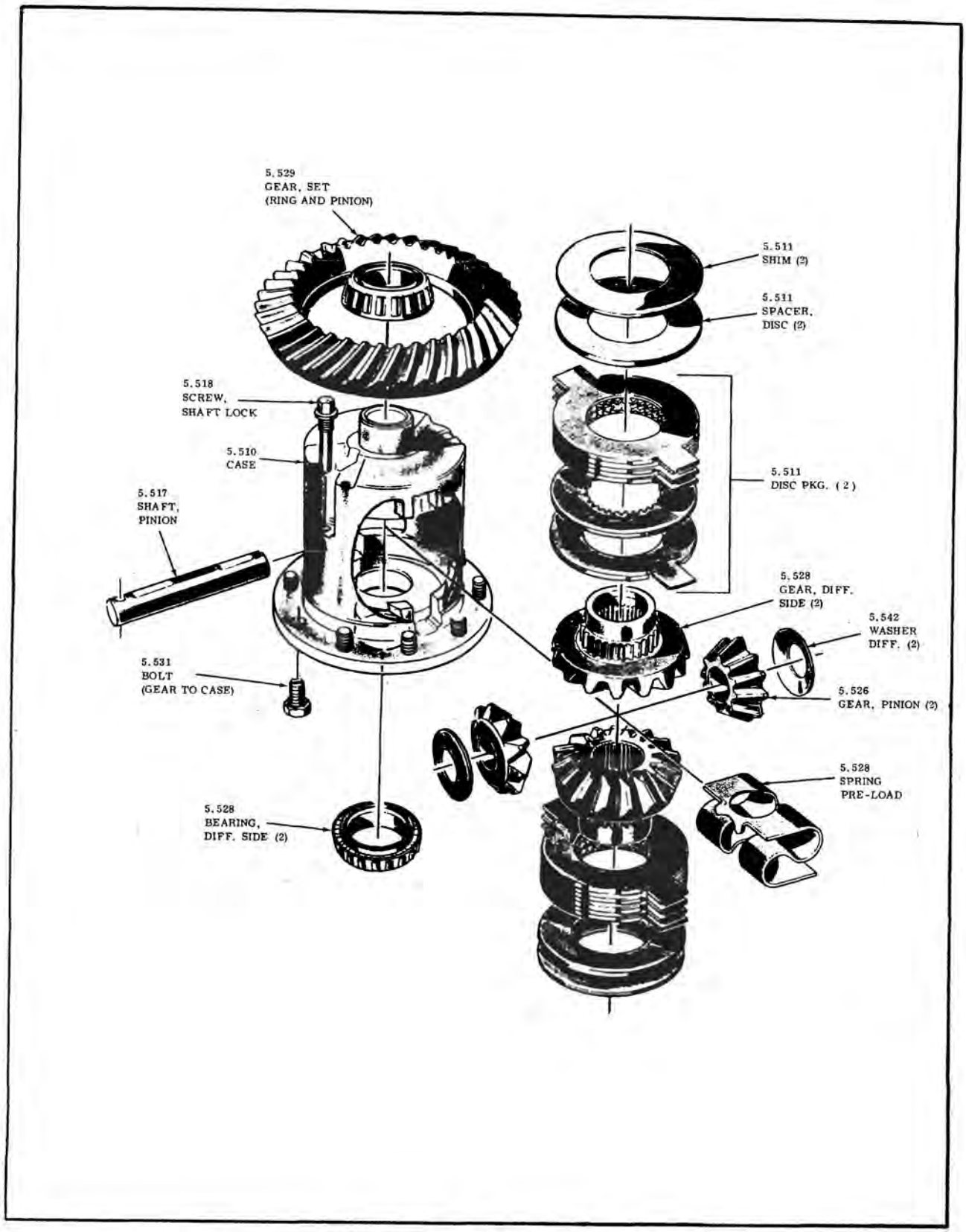

POSITIVE TRACTION DIFFERENTIAL

1971-197250-60-80-9000

1967 AXLE RATIOS

SERIES	ENGINE	TRANSMISSION	STANDARD	ECONOMY G 95	PERFORM G 91	SPECIAL CAR ORDER G 90	G 89	G 94
SPECIAL & SKYLARK COUPES, SEDANS, CONVERTIBLES	225 V6	3 SPEED MAN	3.23	NA	NA	3.90**		
		2 SPEED AUTO	2.93	2.78	3.23	3.90**	3.36**	
		2 SPEED AUTO W/AC	3.23	NA	3.36**	3.90**		
	300 V8 & 340 V8	3 SPEED MAN	2.93	NA	NA	3.90**	3.36**	
		2 SPEED AUTO	2.78	2.56 REG	3.23	3.90**		
SPECIAL WAGON	225 V6	3 SPEED MAN	3.23	NA	NA	3.90**		
		2 SPEED AUTO	3.23	2.93	3.36**	3.90**	3.55**	
	300 V8 & 340 V8	3 SPEED MAN	3.23	NA	NA	3.90**		
		2 SPEED AUTO	2.93	2.78	3.36**	3.90**		
SPORTWAGON	340 V8	3 SPEED MAN	3.23	NA	NA	3.90		
		2,3 SPEED AUTO	3.23	NA	3.55	3.90		
G.S. 400	400 V8	3,4 SPEED MAN	3.36	NA	3.55*	4.30	3.90	
		3 SPEED AUTO	2.93	NA	3.36	4.30	3.90	3.55
LE SABRE	340 V8	3 SPEED MAN	3.36	NA	NA	3.90		
		2 SPEED AUTO	2.93	2.78*	3.36	3.90		
		3 SPEED AUTO	2.93	2.78*	3.36	3.90		
WILDCAT	430 V8	3 SPEED AUTO & MAN	3.07	2.78	3.42	3.91		
ELECTRA		3 SPEED AUTO	2.78	2.56	3.42	3.91		
RIVIERA	430 V8	3 SPEED AUTO	3.07	NA	3.42	3.91		
GS RIVIERA		3 SPEED AUTO	3.42 PT	NA	NA	3.91		

PT = POSITIVE TRACTION

NOTE: ALL PERFORMANCE & SPECIAL CAR ORDER AVAILABLE ONLY WITH PT

* NOT AVAILABLE WITH A/C

** SAME AXLE AS G.S. 400

AIR CONDITIONING NOT AVAILABLE WITH SPECIAL CAR ORDER RATIOS G 90, G 89 & G 94

1968 AXLE RATIOS

SERIES	ENGINE	TRANS	STD	ECONOMY G 95	ECONOMY G 96 PT	PERFORMANCE G 91 PT	PERFORMANCE G 92	SPECIAL CAR ORDER G 90*	SPECIAL CAR ORDER G 89*
SPECIAL DELUXE & SKYLARK COUPES, SEDANS & CONVERTIBLES	250 L6	3 SPEED MAN	3.23C	NA	NA	NA	NA	3.91**	NA
		2 SPEED AUTO	2.93C	2.73	2.73	3.23C	NA	3.91**	3.42**
		2 SPEED AUTO W/AC	3.23C	NA	NA	3.42C**	NA	NA	NA
	350 V8	3 SPEED MAN	2.93C	NA	NA	NA	NA	3.91**	3.42**
		2 SPEED AUTO 2 BBL	2.56	NA	NA	3.23C	3.23C	3.91**	NA
		2 SPEED AUTO 4 BBL	2.73	NA	NA	3.23C	3.23C	3.91**	NA
GS 350	350 V8	3,4 SPEED MAN	3.26	NA	NA	NA	NA	NA	NA
		2 SPEED AUTO	3.23	NA	NA	NA	NA	NA	NA
SPECIAL WAGON	350 V8	3 SPEED MAN	3.23	NA	NA	NA	NA	3.91**	NA
		2 SPEED AUTO	2.93	2.73	2.73	3.23	NA	3.91**	NA
SPORTWAGON	350 V8	3 SPEED MAN	3.23	NA	NA	NA	NA	3.91	NA
		2 SPEED AUTO	3.23	2.93	2.93	3.42	NA	3.91	3.64
SPORTWAGON 400	400 V8	3 SPEED AUTO	3.23	2.93	2.93	3.42	NA	3.91	3.64
GS 400	400 V8	3,4 SPEED MAN	3.42	NA	NA	3.64	NA	3.91	NA
		3 SPEED AUTO	2.93	NA	NA	3.42	NA	3.91	3.64
LESABRE	350 V8	3 SPEED MAN	3.23	NA	NA	NA	NA	3.91	NA
		2 SPEED AUTO	2.93	2.73*	2.73*	3.23	NA	3.91	3.42
		3 SPEED AUTO	2.93	2.73*	2.73*	3.23	NA	3.91	3.42
WILDCAT ELECTRA	430 V8	3 SPEED MAN/AUTO	3.07	2.78	2.78	3.42	NA	3.91	NA
		3 SPEED AUTO	2.78	2.56	2.56	3.42	NA	3.91	NA
RIVIERA GS RIVIERA	430 V8	3 SPEED AUTO	3.07	NA	NA	3.42	NA	3.91	NA
		3 SPEED AUTO	3.42PT	NA	NA	NA	NA	3.91	NA

C = CANADIAN
PT = POSITIVE TRACTION
NOTE: SPECIAL CAR ORDER AVAIL ONLY WITH PT
NA = NOT AVAILABLE
* NOT AVAILABLE WITH A/C
** SAME AXLE AS GS 400

1969 AXLE RATIOS

Series	Engine	Trans.	Std.	Economy G 95	Economy G96PT	Performance G91PT	Performance G92	Special Car Order G90	Special Car Order G89
Special Deluxe & Skylark Std.	250L6	3 Speed Man	3.23C	NA	NA	NA	NA	*3.91 **	3.42 **
		2 Speed Auto	2.93C	NA	NA	3.23C	3.23C	*3.91 **	3.42 **
		2 Speed Auto AC	3.23C	NA	NA	3.42C **	3.42C **	NA	NA
	350V8	3 Speed Man	2.93C	NA	NA	NA	NA	*3.91 **	3.23
		2 Spd. Auto 2 Bbl.	2.56	NA	NA	3.23C	3.23C	*3.91 **	2.73
		2 Spd. Auto 2 Bbl. AC	2.73	NA	NA	3.23C	3.23C	*3.91 **	NA
		2 Spd. Auto 4 Bbl.	2.73	2.56	2.56	3.23C	3.23C	*3.91 **	NA
Skylark Custom	350V8	3 Speed Man	2.93C	NA	NA	NA	NA	*3.91 **	3.23
		3 Speed Auto.	2.73	2.56	2.56	3.23C	3.23C	*3.91 **	NA
GS 350	350V8	3,4 Speed Man	3.23	NA	NA	3.42**	3.42**	NA	3.64**
		2 Speed Auto	3.23	NA	NA	3.42**	3.42**	NA	NA
Special Wagon	350V8	3 Speed Man	3.23	NA	NA	NA	NA	*3.91 **	3.64**
		2 Speed Auto	2.93	2.73	2.73	3.23	3.23	*3.91 **	NA
Sportwagon	350V8	3 Speed Man	3.23	NA	NA	NA	NA	*3.91	3.64
		3 Speed Auto.	3.23	2.93	2.93	3.42	3.42	*3.91	3.64
Sportwagon 400	400V8	3 Speed Auto	3.23	2.93	2.93	3.42	3.42	*3.91	3.64
GS 400	400V8	3,4 Speed Man	3.42	NA	NA	3.64	NA	*3.91	NA
		3 Speed Auto	2.93	NA	NA	3.42	3.42	*3.91	3.64
LeSabre	350V8	3 Speed Man	3.23	NA	NA	NA	NA	3.64	3.42
		2,3 Speed Auto	2.93	2.73*	2.73*	3.23	3.23	3.64	3.42
Wildcat	430V8	3 Speed Man	3.07	NA	NA	NA	NA	NA	NA
		3 Speed Auto	3.07	2.78	2.78	3.42	3.23	*3.91	NA
Electra	430V8	3 Speed Auto	2.78	2.56	2.56	3.23	3.23	*3.91	3.07
Riviera	430V8	3 Speed Auto	3.07	NA	NA	3.42	3.23	*3.91	NA
GS Riviera		3 Speed Auto	3.42PT	NA	NA	NA	NA	*3.91	NA

PT = Positive Traction
NA = Not Available
NOTE: G89 & G90PT only
* Not Available with AC
** Same Axle as GS 400
C = Canadian Usage 3.31 for 3.23, 3.07 for 2.93, NA for 3.42

1970 AXLE RATIOS

Series	Engine	Transmission	Std.	Economy G95	Economy G96PT	Perf. G91PT	Special Car Order G90PT	Special Car Order G89PT
Skylark & Skylark 350	250 L6	3-Speed Manual	3.23	NA	NA	NA	3.91x	3.42
		THM-350	2.93	NA	NA	3.23	3.91x	3.42
	350 V8	3-Speed Manual	2.93	NA	NA	NA	3.91x	3.23
		THM-350 2 Bbl.	2.56	NA	NA	3.23	3.91x	2.73x
		THM-350 4 Bbl.	2.73	2.56	2.56	3.23	3.91x	NA
Sport Wagon	350 V8	3-Speed Manual	3.23	NA	NA	NA	3.91x	3.64
		THM-350	2.93	2.73	2.73	3.23	3.91x	NA
Skylark Custom	350 V8	3-Speed Manual	2.93	NA	NA	NA	3.91x	3.23
		THM-350 2 Bbl.	2.56	NA	NA	3.23	3.91x	2.73x
		THM-350 4 Bbl.	2.73	2.56	2.56	3.23	3.91x	NA
GS	350 V8	3&4-Speed Manual	3.23	NA	NA	3.42	NA	3.64
		THM-350	3.23	NA	NA	3.42	NA	NA
GS 455	455 V8	3&4-Speed Manual	3.42	NA	NA	3.64	3.91x	NA
		THM-400	2.93	NA	NA	3.42	3.91x	3.64
GS Stage I	455 V8	Less A/C	3.64PT	NA	NA		3.91	
		Less A/C	3.42PT	NA	NA		NA	
LeSabre & LeSabre Custom	350 V8	3-Speed Manual	3.23	NA	NA	NA	3.64	3.42
		THM-350	2.93	2.73	2.73	3.23	3.64	3.42
Estate Wagon	455 V8	3-Speed Manual & THM-400	2.78	NA	NA	3.23	NA	NA
LeSabre 455 & Wildcat	455 V8	3-Speed Manual	2.78	NA	NA	NA	NA	NA
		THM-400	2.78	NA	NA	3.23	3.91x	3.42
Electra	455 V8	THM-400	2.56	NA	NA	2.78	3.91x	3.23
Riviera	455 V8	THM-400	2.78	NA	NA	3.42	3.91x	3.23
GS Riviera		THM-400	3.42PT	NA	NA	NA	3.91x	NA

PT = Positive Traction
NA = Not Available
NOTE: X = Not Available with A/C

1971 AXLE RATIOS

Series	Engine	Transmission	Standard	Economy	Performance
Skylark	250 L-6	3 Speed Manual Thm 350	3.08	N.A. N.A.	N.A. 3.42
Skylark	350 V-8	3 Speed Manual Thm 350-2 Bbl. Thm 350-4 Bbl.	3.08 2.56 2.73	N.A. N.A. 2.56	N.A. 3.08 3.08
G.S.	350 V-8	3 & 4 Speed Manual Thm 350	3.08	N.A. N.A.	3.42
Sport Wagon	350 V-8	3 Speed Manual Thm 350	 3.08	N.A. 2.73	N.A. 3.42
G.S.	455 V-8	4 Speed Manual Thm 400	3.42 3.08	N.A. N.A.	N.A. 3.42
G.S.X.	455 V-8	4 Speed Manual Thm 400	3.42	N.A.	N.A.
G.S.X. Stage 1	455 V-8	4 Speed Manual Thm 400	3.42	N.A.	N.A.
LeSabre	350 V-8	Thm 350	3.08	2.73	3.42
LeSabre	455 V-8	Thm 400	2.93	N.A.	N.A.
Estate Wagon	455 V-8	Thm 400	2.93	N.A.	3.42
Centurion	455	Thm 400	2.93	N.A.	N.A.
Electra	455 V-8	Thm 400	2.73	N.A.	2.93
Riviera	455 V-8	Thm 400	2.93	N.A.	3.42
Riviera G.S.	455 V-8	Thm 400	3.42	N.A.	N.A.

1972 AXLE RATIOS

Series	Engine	Transmission	Standard	Economy	Performance
Skylark	350 V-8	3 Speed Manual Thm 350 Thm 400	3.08 2.56 2.73	N.A. N.A. 2.56	N.A. 3.08 3.08
G.S.	350 V-8	3 & 4 Speed Manual Thm 350	3.08 3.08	N.A. N.A.	3.42 3.42
Sportwagon	350 V-8	3 Speed Manual Thm 350	3.08 3.08	N.A. 2.73	N.A. 3.42
G.S.	455 V-8	4 Speed Manual Thm 400	3.42 3.08	N.A. N.A.	N.A. 3.42
G.S.X.	455 V-8	4 Speed Manual Thm 400	3.42 3.08	N.A. N.A.	N.A. 3.42
G.S.X. Stage 1	455 V-8	4 Speed Manual Thm 400	3.42 3.42	N.A. N.A.	N.A. N.A.
LeSabre	350 V-8	Thm 375-B	3.08	2.73	3.42
LeSabre	455 V-8	Thm 400	2.93	N.A.	3.42
Estate Wagon	455 V-8	Thm 400	2.93	N.A.	3.42
Centurion	455 V-8	Thm 400	2.93	N.A.	3.42
Electra	455 V-8	Thm 400	2.73	N.A.	2.93
Riviera	455 V-8	Thm 400	2.93	N.A.	3.42
Riviera G.S.	455 V-8	Thm 400	3.42	N.A.	N.A.
LeSabre-Centurion Pol. Car	350 V-8 or 455 V-8	Thm 375-B Thm 400	2.93 2.93	N.A.	N.A.

Special - Special Deluxe

5.858-1362759-Cap, Hub

Special - Special Deluxe - Deluxe

5.858 - 1370114 - COVER

Item Available Separately:
5.871-1363921-Medallion

Skylark

5.858 - 1370098 Cover

Items Available Separately:
5.871- -Medallion
5.871-5718638-Spinner
5.871-5718308-Retainer, Medallion
8.977-274105-Screw, Spinner to Cover

LeSabre

5.858-1356649-Cap, Hub

LeSabre Deluxe

5.858 - 1367372 - COVER

Part Available Separately:
5.871-1370411-Medallion

Wildcat

5.858-1369250-Cover

Item Available Separately:
5.871-1369255-Medallion

Electra 225 - LeSabre - Super Deluxe

5.858 - 1370149 - COVER

Parts Available Separately:
5.871-1370411-Medallion
5.871-1370151-Ornament

Riviera

5.858-1369252-Cover

Part Available Separately:
5.871-1369254-Medallion

Special - Special Deluxe - Skylark Wire Wheel Cover

5.858-980787-Cover, Wire Wheel

Parts Available Separately:
5.871-1364372-Emblem
5.871-1368354-Spinner

LeSabre - Wildcat - Riviera Wire Wheel

5.858-980788-Cover (LeSabre-Wildcat)
5.858-980789-Cover (Riviera)

Parts Available Separately:
5.871-1364372-Emblem-(Tri-Shield)
5.871-1364377-Emblem-(Riviera)
5.858-1358215-Cover and Retaining Ring
5.871-1368354-Spinner, Top
5.871-1356619-Spoke, Long
5.871-1356620-Spoke, Short
5.871-1356621-Nut, Adjusting

Riviera - Chrome Wheel

5.803 - 1369757 - WHEEL

Part Available Separately:
5.871-1371346-Medallion

Wildcat - Chrome Wheel

5.803 - 1369757 - WHEEL

Part Available Separately:
5.871-1371206-Medallion

1965 WHEEL COVERS

33—34—35—3600

5.858-1362759-CAP, HUB

4255—65, 4455—65 (STANDARD)
33—34—35—3600 (DELUXE)

5.858-981101-COVER

PARTS AVAILABLE SEPARATELY
5.871-1375845-MEDALLION

3000

5.803-1373793-WHEEL, CHROME

PARTS AVAILABLE SEPARATELY
5.871-1376689-MEDALLION AND BEZEL
(TRI-SHIELD)

43-44-4600
EXC. WAGONS

5.858 - 981161 Cover

PARTS AVAILABLE SEPARATELY
5.871-1375941-SPINNER AND MEDALLION

42—43—44—4600

5.858-980787-COVER, WIRE WHEEL

4000

5.803-1373793-WHEEL, CHROME

PARTS AVAILABLE SEAPARATELY
5.871-1376690-MEDALLION AND BEZEL (SKYLARK)

5200 (STANDARD)

5.858-1356649-CAP, HUB

5200 (DELUXE)
5400 (STANDARD)
6000 (STANDARD)
9000 (STANDARD) AND G.S. 2ND TYPE)

5.858-981102-COVER-5200-5400
5.858-981159 -COVER-6000
5.858-981160-COVER-9000*

PARTS AVAILABLE SEPARATELY
5.871-1377915-MEDALLION-5200-5400
5.871-1375999-MEDALLION-6000
5.871-1375993-MEDALLION-9000*

(NOTE:) 1st. TYPE RIVIERA, GRANSPORT USES PART NUMBER 5.858-1373147 WHICH HAS A TOP SPINNER CASTING.)

52—5400 (SUPER DELUXE
8000 (STANDARD)

5.858-981103-COVER

PARTS AVAILABLE SEPARATELY
5.871-1375985-ORNAMENT AND MEDALLION

50—60—9000

5.858-980788-COVER, WIRE WHL. -50-6000
5.858-980789-COVER, WIRE WHL. -9000

PARTS AVAILABLE SEPARATELY
5.871-1364372-MEDALLION-50-6000
5.871-1364377-MEDALLION-9000
5.858-1358215-COVER AND RETAINING RING
5.871-1368354-SPINNER CASTING, TOP
5.871-1356619-SPOKE, LONG
5.871-1356620-SPOKE, SHORT
5.871-1356621-NUT, ADJ.

6000—9000

5.803-1231960-WHEEL, CHROME (LESS HUB)

PARTS AVAILABLE SEPARATELY
5.871- -HUB AND MEDALLION (6000)
5.871- -HUB AND MEDALLION (9000)

9000 (SUPER DELUXE)

5.858-981104-COVER

PARTS AVAILABLE SEPARATELY
5.871-1375947-SPINNER AND MEDALLION

(1)

SPECIAL · SPECIAL DELUXE · SKYLARK
G.S. 400 · SPORTWAGON

5.858-1362759-CAP, HUB

(2)

SPECIAL · SPECIAL DELUXE
G.S. 400 · SPORTWAGON

5.858-981196-COVER
PARTS AVAIL. SEPARATELY
5.871-1379345-MEDALLION

(3)

G.S. 400 · SPORTWAGON

5.858-981270-COVER
5.871-393240-SPOKE(INNER)
5.871-393241-SPOKE(OUTER)

(4)

SPECIAL · SPECIAL DELUXE
G.S. 400 · SPORTWAGON

5.803-1380798-WHEEL
5.871-1376689-MED.

(5)

SKYLARK

5.858-981197-COVER

(6)

SKYLARK

5.803-1380798-WHEEL
PARTS AVAIL. SEPARATELY
5.871-1376690-MED. (SKYLARK)

(7)

SPECIAL · SPECIAL DELUXE & SKYLARK
G.S. 400 SPORTWAGON
DISC BRAKE OPTION ONLY

REFER TO GROUP 5.871
PARTS AVAIL. SEPARATELY

(8)

LESABRE · STD 452 SERIES

5.858-1356649-CAP

(9)

LESABRE · STANDARD 454 SERIES
OPTIONAL 452 SERIES

5.858-981203-COVER
PARTS AVAIL. SEPARATELY
5.871-1377915-MEDALLION

(10)

LESABRE

5.858-981271-COVER
PARTS AVAIL. SEPARATELY
5.871-1382154-HUB
5.871-1376565-MEDALLION

(11)

LESABRE SUPER DELUXE
ELECTRA 225

5.858-981198-COVER
PARTS AVAIL. SEPARATELY
5.871-1379139-HUB

(12)

WILDCAT

5.858-981204-COVER
PARTS AVAIL. SEPARATELY
5.871-1375999-MEDALLION

(13)

WILDCAT

5.803- WHEEL, CHR.
REFER TO GROUP 5.871
PARTS AVAIL. SEPARATELY

(14)

RIVIERA

5.858-981205-COVER
PARTS AVAIL SEPARATELY
5.871-1375993-MEDALLION

(15)

RIVIERA · SUPER DELUXE

5.858-981199-COVER
5.871-1377175-HUB

(16)

RIVIERA

REFER TO GROUP 5.871
PARTS AVAIL. SEPARATELY

1967 WHEEL COVERS

(1)

SPECIAL DELUXE -
SKYLARK - SKYLARK CUSTOM
G.S. 350 - G.S. 400 - SPORTWAGON
5.858 - 1362759 - COVER

(2)

SPECIAL DELUXE - G.S. 350
G.S. 400 - SPORTWAGON
5.858 -1383000- COVER

(3)

G.S. 400 - SPORTWAGON -
G.S. 350
5.858 - 981270 - COVER
5.871-393240-SPOKE(INNER)
5.871-393241-SPOKE(OUTER)

(4)

SPECIAL DELUXE - G.S. 350
G.S. 400 - SPORTWAGON
5.871 - 1376689 - MEDALLION
5.803 - 1384134 - WHEEL

(5)

SKYLARK - SKYLARK CUSTOM
5.858 - 981398 - COVER

(6)

SKYLARK - SKYLARK CUSTOM
5.871 - 1376690 - MEDALLION
5.803 - 1384134 - WHEEL

(7)

SPECIAL DELUXE - SKYLARK
SKYLARK CUSTOM -
G.S. 400 - SPORTWAGON G.S. 350
5.871 - 1383608 - HUB
5.871 - 1383607 - RING

(8)

LESABRE - STD. 452 SERIES
5.858 - 1356649 - COVER

(9)

LESABRE - STANDARD 454 SERIES
OPTIONAL 452 SERIES
5.858 - 981363 - COVER

(10)

LESABRE - WILDCAT
5.858 - 981283 - COVER
5.871-1382154-HUB
5.871-1376565-MEDALLION

(11)

LESABRE SUPER DELUXE
ELECTRA 225
5.858 - 981198 - COVER

(12)

WILDCAT
5.858 - 981364 - COVER

(13)

WILDCAT
5.871 - 1376592 - MEDALLION
5.803 - 1383421 - WHEEL

(14)

RIVIERA
5.858 - 981366 - COVER

(15)

RIVIERA - SUPER DELUXE
5.858 - 981199 - COVER

(16)

RIVIERA
5.871 - 1376571 - MEDALLION
5.803 - 1383421 - WHEEL

1968 WHEEL COVERS

SPECIAL DELUXE -
SKYLARK - SKYLARK CUSTOM
G.S. 350 - G.S. 400 -
SPORT WAGON
5.858-1362759-CAP, HUB
(30-4000 STANDARD)

SPECIAL DELUXE - G.S. 350
G.S. 400 - SPORT WAGON
5.858-981442-COVER, WHEEL
5.871-1230053-MEDALLION
5.871-1230052-RETAINER

G.S. 400 - SPORT WAGON - G.S. 350
5.858-981270-COVER
5.871-393240-SPOKE(INNER)
5.871-393241-SPOKE(OUTER)

SPECIAL DELUXE - G.S. 350
G.S. 400 - SPORT WAGON
5.803-1230287-WHEEL
5.871-1376689-HUB & MEDALLION
5.871-1376565-MEDALLION
(TRI-SHIELD)

SKYLARK - SKYLARK CUSTOM
5.858-981443-COVER
5.871-1386436-HUB
5.871-1384187-MEDALLION
5.871-1384189-GASKET

SKYLARK - SKYLARK CUSTOM
5.803-1230287-WHEEL
5.871-1376690-HUB & MEDALLION
5.871-1376687-MEDALLION
(SKYLARK)

G.S. 350 - G.S. 400
5.871-1381493-HUB
5.871-1376565-MEDALLION
5.871-1381494-GASKET
5.871-1383608-HUB CAP &
RET. RING
5.871-1383607-RING,
WHEEL TRIM
5.871-9777276-SCREW

LESABRE - STD. 5200 SERIES
5.858-1356649-HUBCAP

LESABRE - STANDARD 5400 SERIES
OPTIONAL 5200 SERIES
5.858-981427-COVER
5.871-1386888-MEDALLION
5.871-9718911-SPRING,
RETAINER

LESABRE SUPER DELUXE
5.858-981487-COVER
5.871-1387997-MEDALLION
5.871-1387003-ORNAMENT

WILDCAT
5.858-981428-COVER
5.871-1387067-MEDALLION
5.871-9718911-SPRING,
RETAINER

WILDCAT
5.803-1383421-WHEEL
5.871-1376592-MEDALLION

LESABRE - WILDCAT
5.858-981283-COVER
5.871-1382154-HUB
5.871-1376565-MEDALLION

RIVIERA
5.858-981429-COVER
5.871-1387068-MEDALLION
5.871-9718911-SPRING,
RETAINER

RIVIERA - SUPER DELUXE
5.858-981199-COVER
5.871-1377175-HUB & MEDALLION

RIVIERA
5.803-1383421-WHEEL
5.871-1376571-MEDALLION

ELECTRA 225
5.858-981426-COVER
5.871-1386801-MEDALLION
5.871-1387003-ORNAMENT

1969 WHEEL COVERS

SKYLARK - SKYLARK CUSTOM
SKYLARK 350 G. S. G. S. 455
SPORTWAGON
5.858 - 1362759 CAP, HUB
(30 - 4000 STANDARD)

G. S. G. S. 455 - SPORT WAGON
5.858 - 981565 COVER

G. S. G. S. 455
5.858 - 981270 COVER
5.871 - 393240 - SPOKE
5.871 - 393241 - SPOKE

G.S.X.
5.803 - 1235014 WHEEL
5.858 - 1362759 COVER (STD.)
5.871 - 3901708 TRIM, MLDG.

G. S. G. S. 455 SPORT WAGON
SKYLARK - SKYLARK CUSTOM
SKYLARK 350
5.803 - 1230287 - WHEEL
5.871 - 1376689 - HUB & MEDALLION
5.871 - 1376565 - MEDALLION

LESABRE - STD. 452 SERIES
5.858 - 1356649 - CAP, HUB

LESABRE - STD. 454 SERIES STD.
OPTIONAL 452 SERIES DELUXE
5.858 - 981562 - COVER

G.S.X.
5.803 - 1235016 WHEEL, CHROME
5.871 - 1376689 HUB & MED. ASM

LESABRE SUPER DELUXE
5.858 - 981567 - COVER

LESABRE - WILDCAT
5.858 - 981283 - COVER
5.871 - 1382154 - HUB
5.871 - 1376565 - MEDALLION

WILDCAT - ESTATE WAGON
5.803 - 1383421 - WHEEL
5.871 - 1376565 - MEDALLION

ELECTRA 225
5.858 - 981561 - COVER

ELECTRA
5.858 - 981551 - COVER

RIVIERA - STD.
5.858 - 981564

RIVIERA - SUPER DELUXE
5.858 - 981560 - COVER

RIVIERA
5.803 - 1383421 - WHEEL
5.871 - 1376571 - MEDALLION

1970-WHEEL COVERS

SKYLARK - SKYLARK CUSTOM G.S. - SPORTWAGON
5.858 - 1362759 - CAP, HUB
(30-4000 STANDARD)

3437-67
5.803 - 1235014 - WHEEL (PAINTED)
5.858 - 1362759 - CAP, HUB
5.871 - 9796696 - RING, TRIM

30-4000 DELUXE COVER
5.858 -981565 - COVER
5.871 - 1232074 - MEDALLION
5.871 - 1232075 - RETAINER

30-4000 WIRE WHEEL
5.858 - 981270 - COVER
5.871 - 393240 - SPOKE (INNER)
5.871 - 393241 - SPOKE (OUTER)

SKYLARK - SKYLARK CUSTOM G.S. - G.S.X. - SPORTWAGON
(SILVER PAINTED)
5.803 - 1236353 - WHEEL
5.871 - 1236441 - MEDALLION
5.871 - 1236442 - BEZEL
5.871 - 1236443 - RETAINER
5.871 - 1230853 - RING, TRIM
5.813 - 1231722 - NUT, CAPPED

3437-67
5.803 - 1236968 - WHEEL (15 x 7)
5.871 - 1236441 - MEDALLION
5.871 - 1236442 - BEZEL
5.871 - 1236443 - RETAINER
5.813 - 1231722 - NUT, CAPPED

SKYLARK - SKYLARK CUSTOM G.S. - SPORTWAGON
5.803 - 1236969 - WHEEL
5.871 - 1236441 - MEDALLION
5.871 - 1236442 - BEZEL
5.871 - 1236443 - RETAINER
5.813 - 1231722 - NUT, CAPPED

52-6000
5.858 - 1236484 - CAP, HUB

LE SABRE & ESTATE WAGONS
5.858 - 981691 - COVER
5.871 - 9834774 - MEDALLION
5.871 - 9834775 - RETAINER

LE SABRE & CENTURION
5.858 - 981696 - COVER
5.871 - 1241629 - SPOKE (LONG)
5.871 - 1241631 - SPOKE (SMORT)

50-6000 (CHROME WHEEL)
5.803 - 1236171 - WHEEL
5.871 - 1236446 - MEDALLION

6600 (DELUXE)
5.858 - 981751 COVER
5.871 - 1237744 - MEDALLION
5.871 - 1237230 - APPLIQUE

6600 (STD.)
5.858 - 981750 COVER
5.871 - 9868552 - MEDALLION
5.871 - 9834775 - RETAINER

ELECTRA (STD.)
5.858 - 981692 - COVER
5.871 - 1237745 - MEDALLION
5.871 - 1237230 - APPLIQUE

ELECTRA
5.858 - 981697 - COVER
5.871 - 1241630 - SPOKE (LONG)
5.871 - 1241631 - SPOKE (SHORT)

RIVIERA (DELUXE)
5.858 - 981698 - COVER
5.871 - 9840975 - MEDALLION
5.871 - 9834775 - RETAINER

RIVIERA (SUPER DELUXE)
5.858 - 981655 - COVER
5.871 - 1236790 - MEDALLION
5.871 - 1239138 - RETAINER

RIVIERA
5.803 - 1236171 - WHEEL
5.871 - 1236450 - MEDALLION
5.813 - 1231723 - NUT, CAPPED

1971 WHEEL COVERS

SKYLARK-SKYLARK CUSTOM
G.S. -SPORTWAGON
5.858-1362759-CAP, HUB
(30-4000 STANDARD)

30-4000 DELUXE COVER
5.858-981565-COVER
5.858-1232079-COVER
5.871-1232074-MEDALION
5.871=-1232075-RETAINER

30-4000 WIRE WHEEL
5.858-981270-COVER
5.871 - 393240 - SPOKE (INNER)
5.871 - 393241 - SPOKE (OUTER)

SUPER DELUXE WHEEL COVER
30-4000
5.858-981812-COVER

SKYLARK-SKYLARK CUSTOM G.S.-SPORT WAGON
5.803-1236969-WHEEL
5.871-1236441-MEDALLION
5.871-1236442-BEZEL
5.813-1231722-NUT-CAPPED

SKYLARK-SKYLARK CUSTOM G.S.-G.S.X.-SPORT WAGON
(SILVER PAINTED)
5.803-1236353 WHEEL
5.871-1236441-MEDALLION
5.871-1236443-RETAINER
5.871-1230853-RING, TRIM
5.8131231722-NUT-CAPPED

3437-67
5.803-1236968-WHEEL(15X7)
5.871-1236441-MEDALLION
5.871-1236442-BEZEL
5.871)1236443-RETAINER
5.813-1231722-NUT-CAPPED

LE SABRE & ESTATE WAGONS
(STANDARD HUB CAP)
5.859-1236484-CAP, HUB

LE SABRE & ESTATE WAGONS
DELUXE WHEEL COVER
5.858-981691-COVER
5.871-9834774-MEDALLION
5.871-9834775 RETAINER

LE SABRE & CETURION
WIRE WHEEL COVER
5.858-981696-COVER
5.871 - 1241629 SPOKE (LONG)
5.871 - 1241631 SPOKE (SHORT)

LE SABRE & CENTURION
CHROME PLATED WHEEL
5.803-1236171-WHEEL
5.871-1236446-MEDALLION

6600-(STD)
5.858-981750-COVER
5.871-9868552-MEDALLION
5.871-9834775-RETAINER

6600 (DELUXE)
5.858-981751-COVER
5.871-1237744-MEDALLION
5.871 - 1237230 - APPLIQUE

ELECTRA & ESTATE WAGON
5.858-981692-COVER
5.871-1237745-MEDALLION
5.871-1237230-APPLIQUE

ELECTRA
5.858-981697-COVER
5.871 - 1241630 - SPOKE (LONG)
5.871 - 1241631 - SPOKE (SHORT)

RIVIERA
5.858-981814-COVER
5.871 - 1240324 - MEDALLION
5.871 - 1237230 - APPLIQUE

RIVIERA
5.858-981655-COVER
5.871-1236790-MEDALLION
5.871 - 1239138 - RETAINER

RIVIERA
(CHROME PLATED WHEEL)
5.803-1236171-WHEEL
5.871-1236450-MEDALLION
5.813 - 1231723 - NUT, CAPPED

1972 WHEEL COVERS

GROUP 6

FRONT

SUSPENSION

STEERING

MEMORANDA

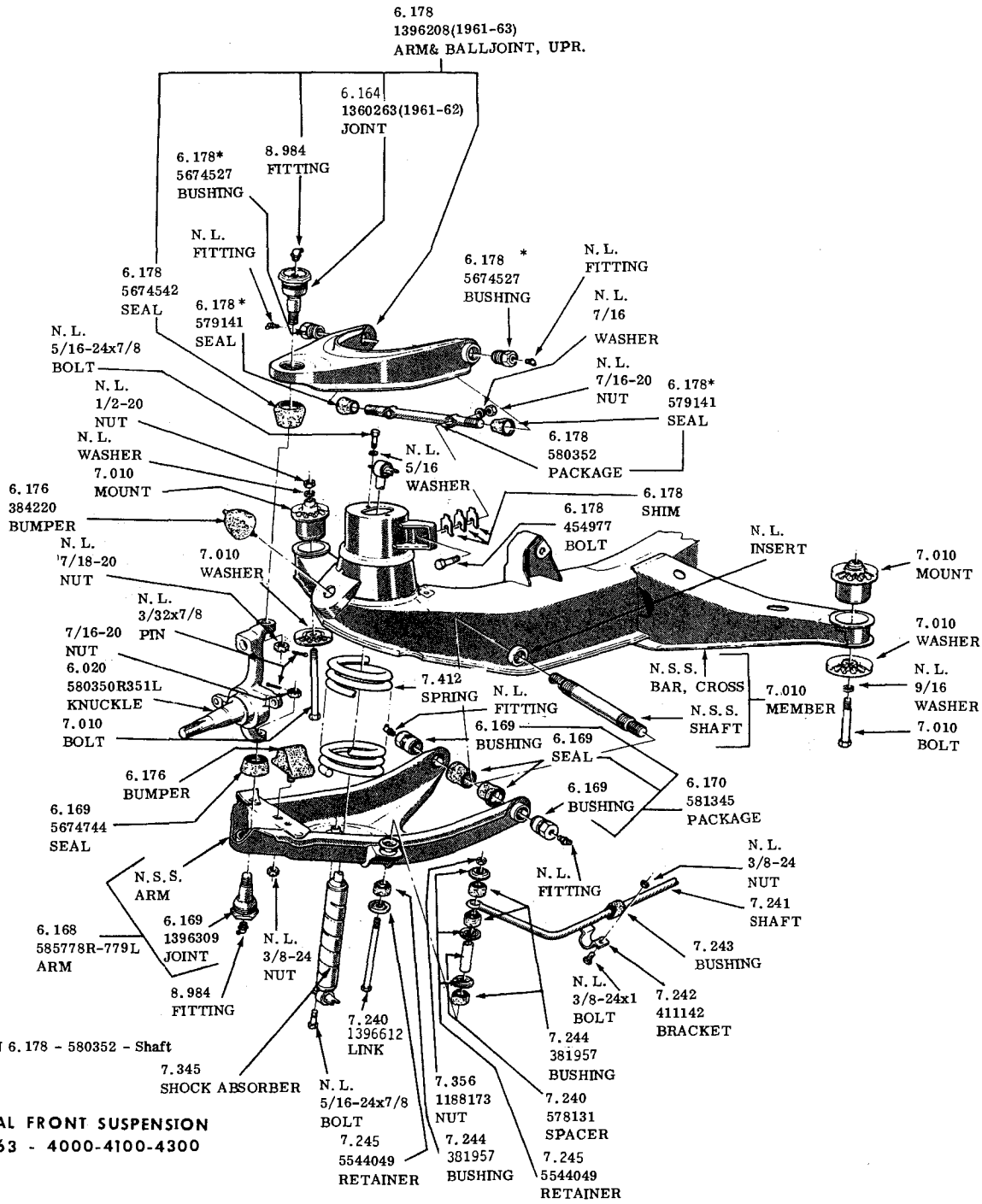

TYPICAL FRONT SUSPENSION
1961-63 - 4000-4100-4300

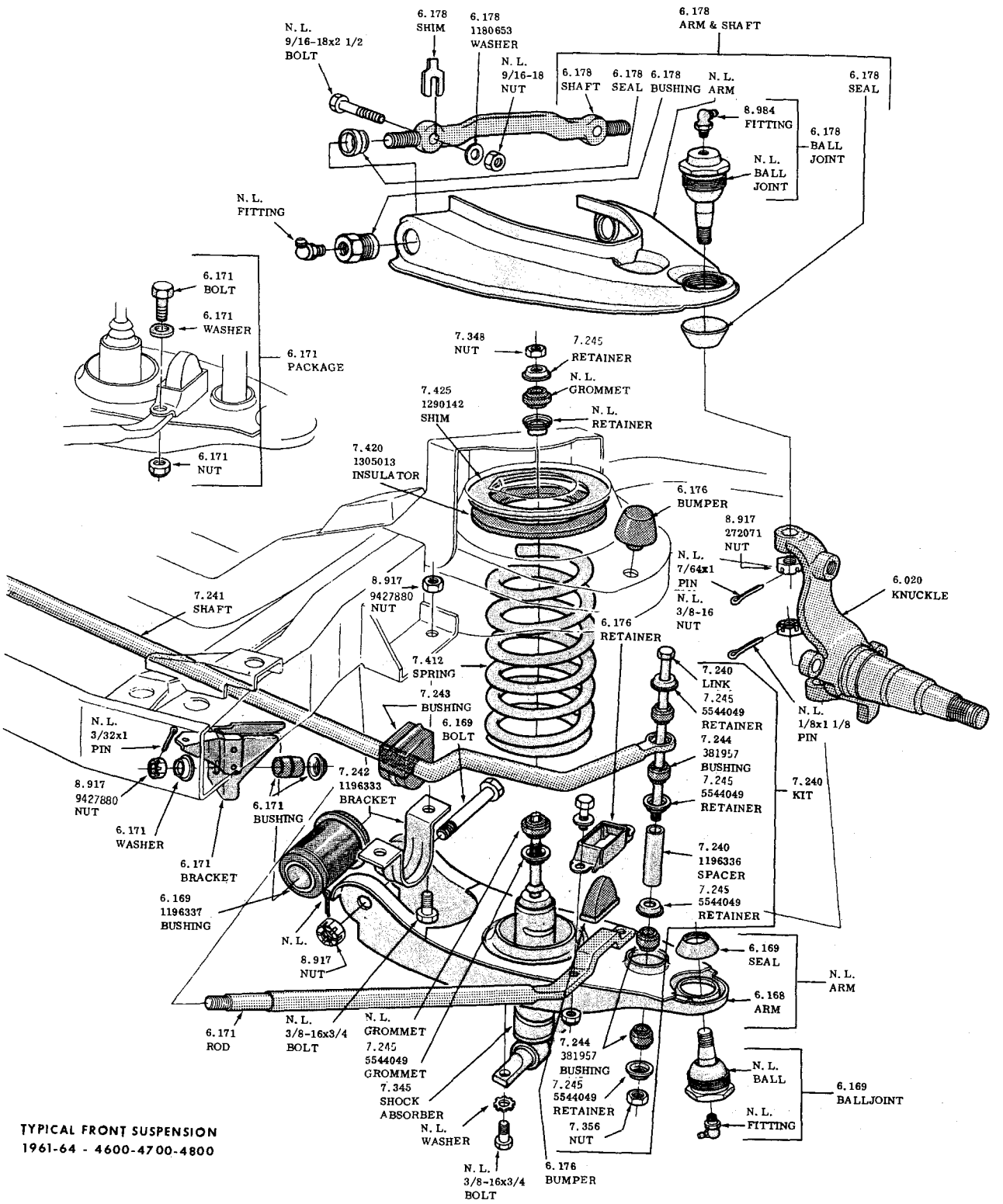

TYPICAL FRONT SUSPENSION
1961-64 - 4600-4700-4800

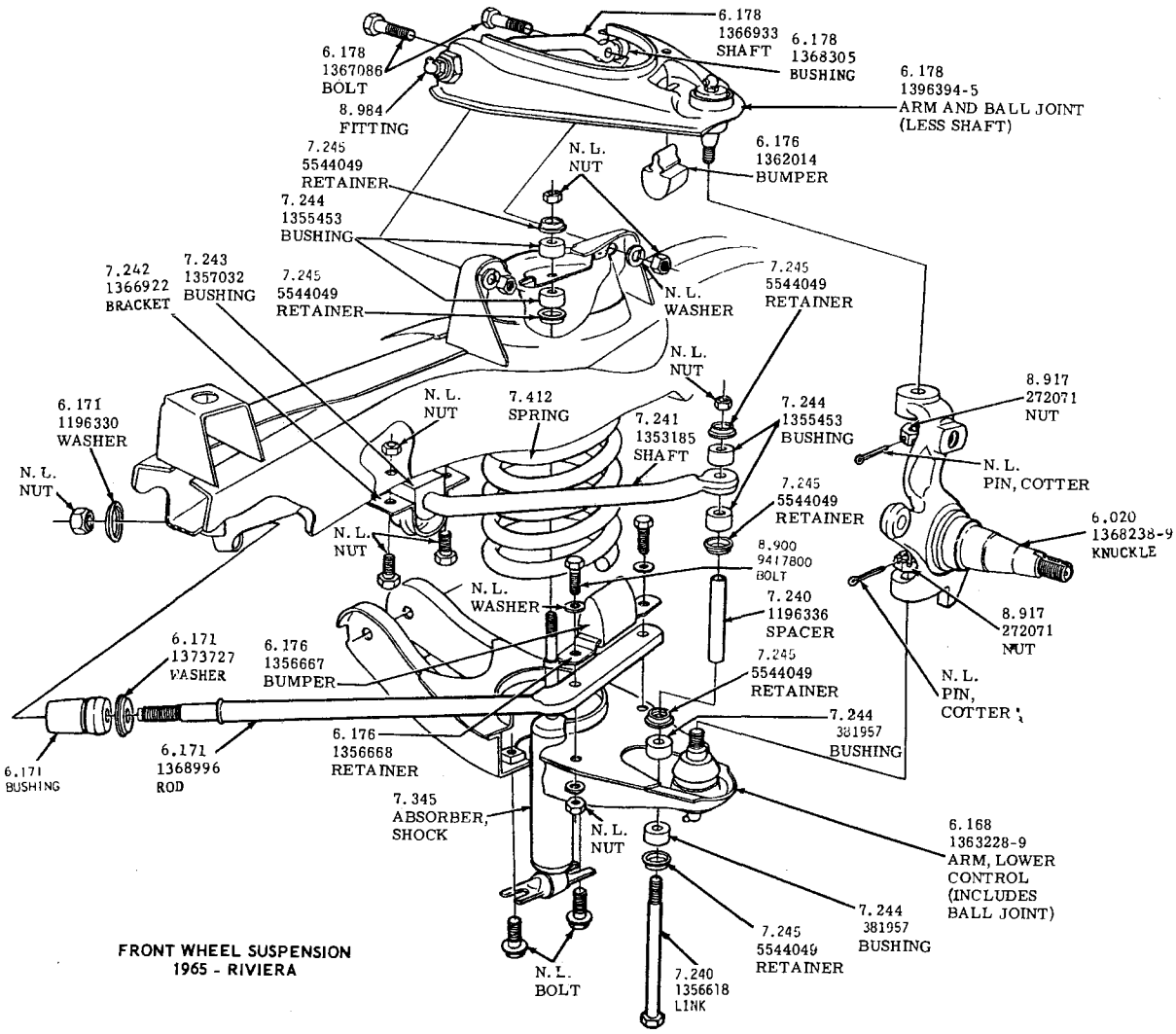

FRONT WHEEL SUSPENSION
1965 - RIVIERA

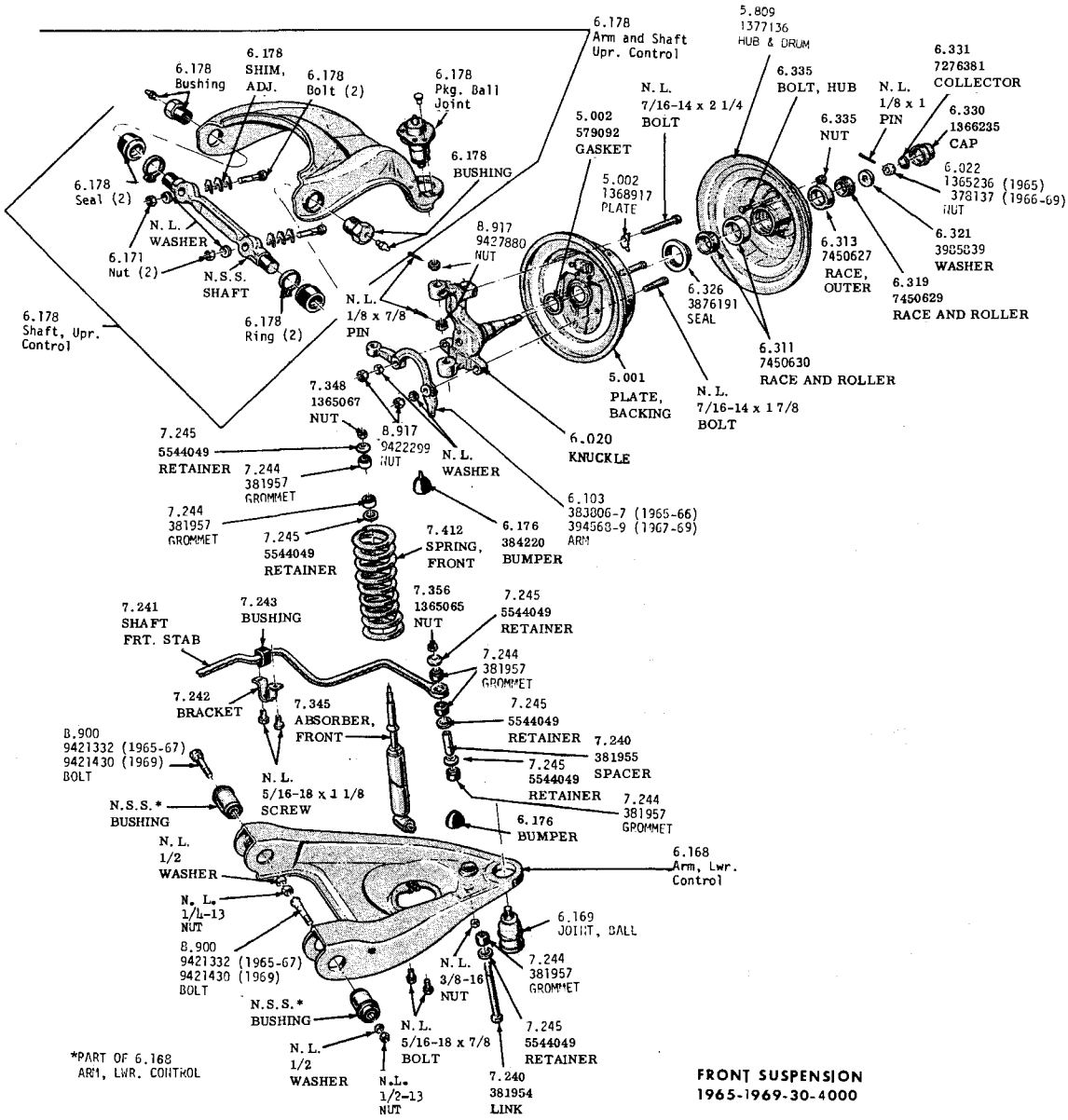

FRONT SUSPENSION
1965-1969-30-4000

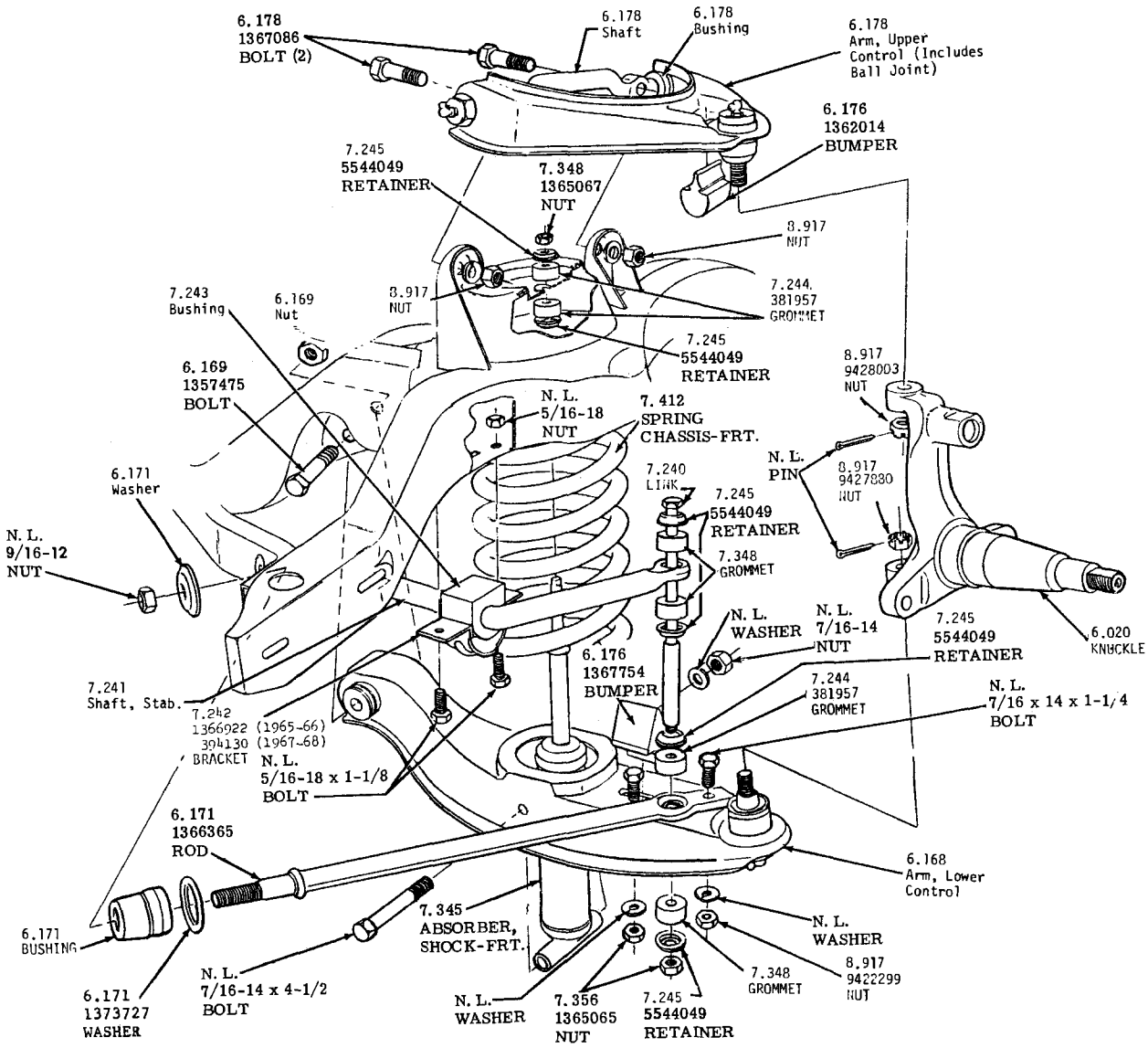

FRONT SUSPENSION
1965-1968-LESABRE-WILDCAT-ELECTRA 225
1966-1968-RIVIERA

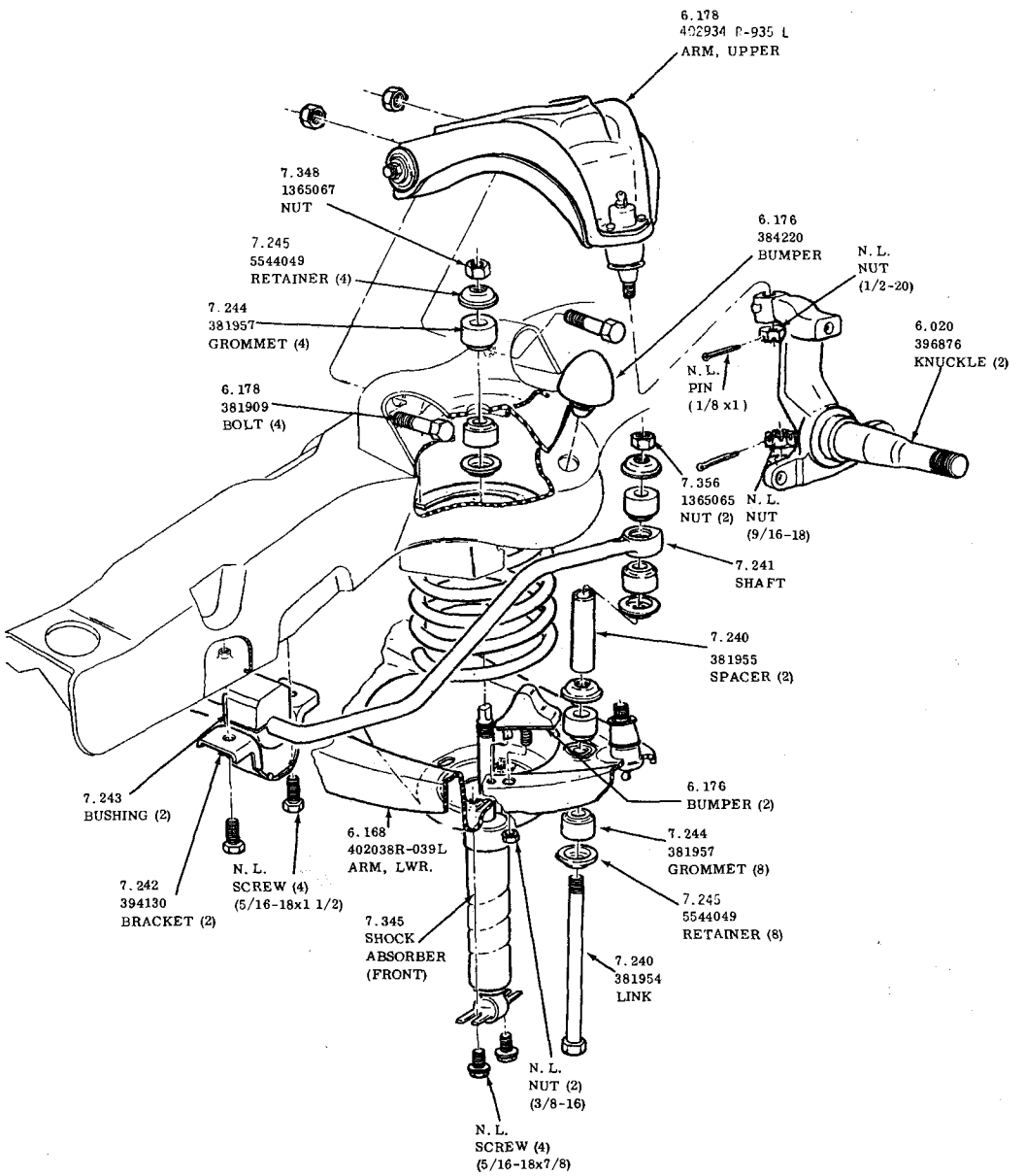

FRONT SUSPENSION
1969-1972 -30-4000

SAGINAW LINKAGE HAS STRAIGHT JOINTS

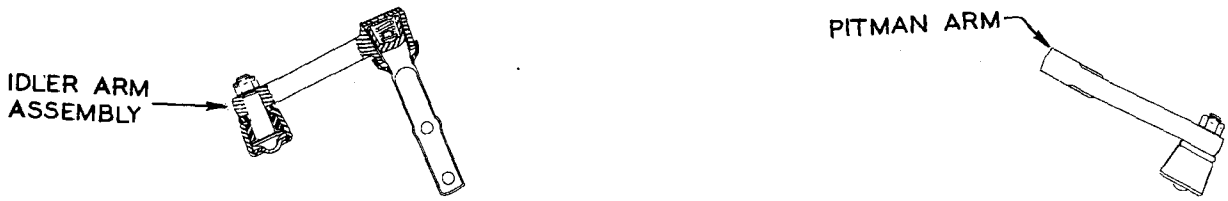

THOMPSON LINKAGE HAS TAPERED JOINTS

THIS ILLUSTRATION SHOWS THE DIFFERENCE BETWEEN SAGINAW AND THOMPSON STEERING LINKAGE

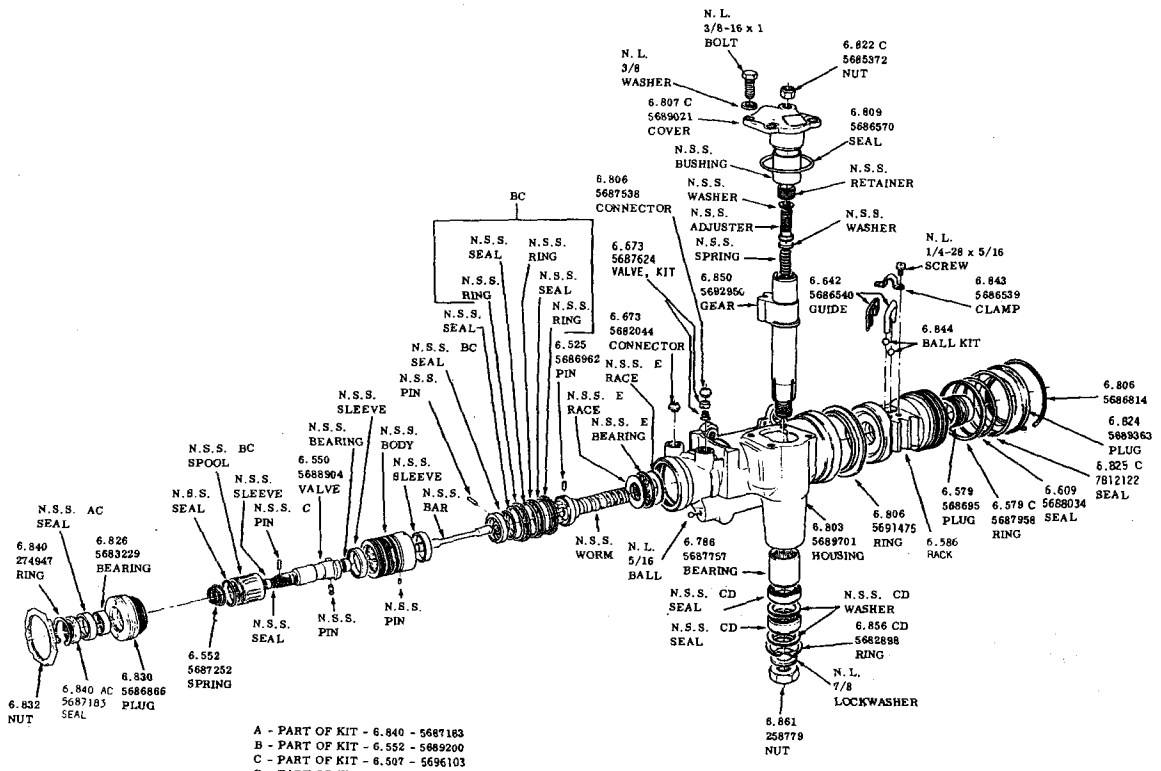

A - PART OF KIT - 6.840 - 5687183
B - PART OF KIT - 6.552 - 5689200
C - PART OF KIT - 6.507 - 5696103
D - PART OF KIT - 6.850 - 5685355
E - PART OF KIT - 6.835 - 5687186

POWER STEERING GEAR
1962 - 63 - 4400 - 4600 - 4800

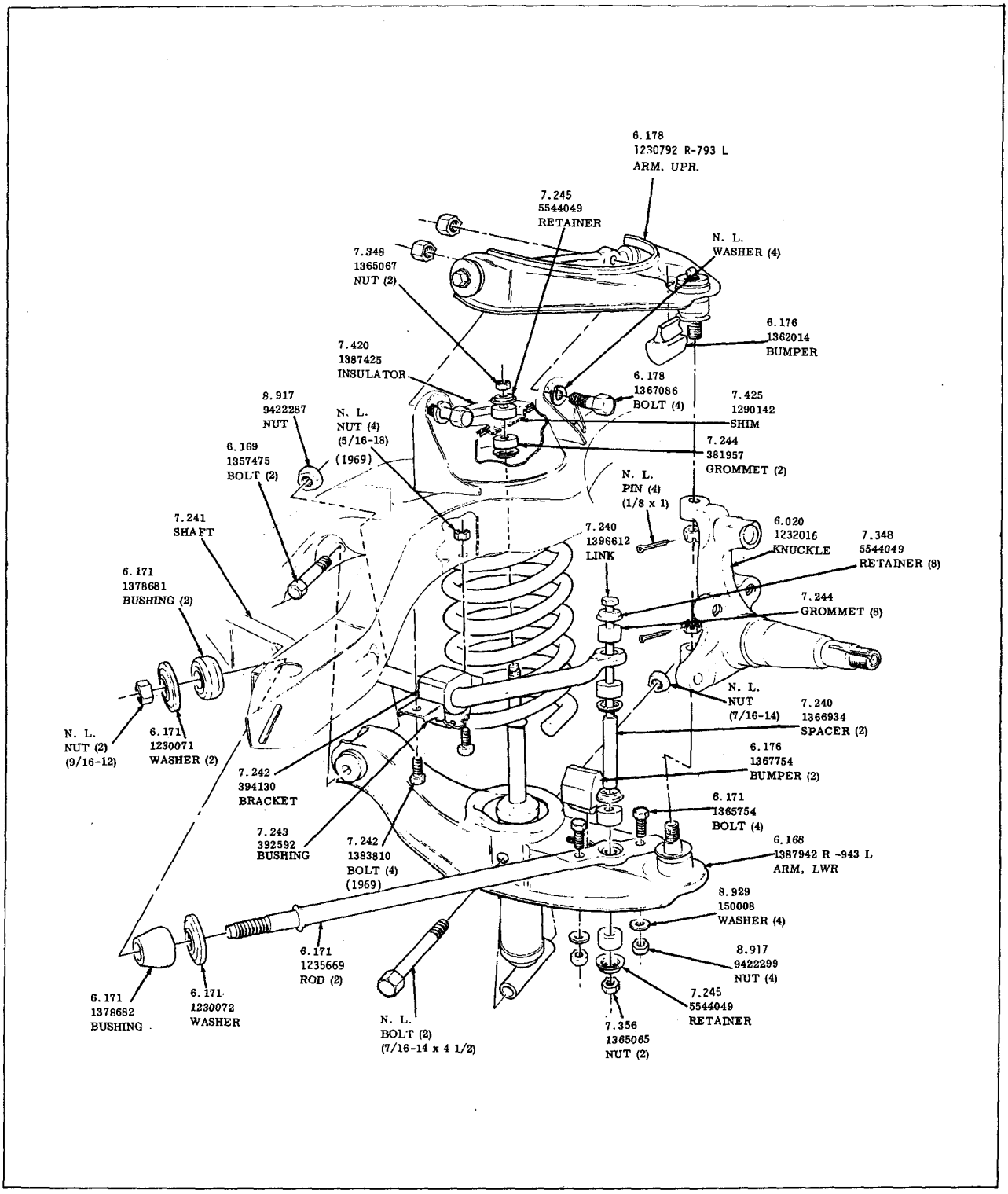

FRONT SUSPENSION
1969-1970 -50-60-80-9000

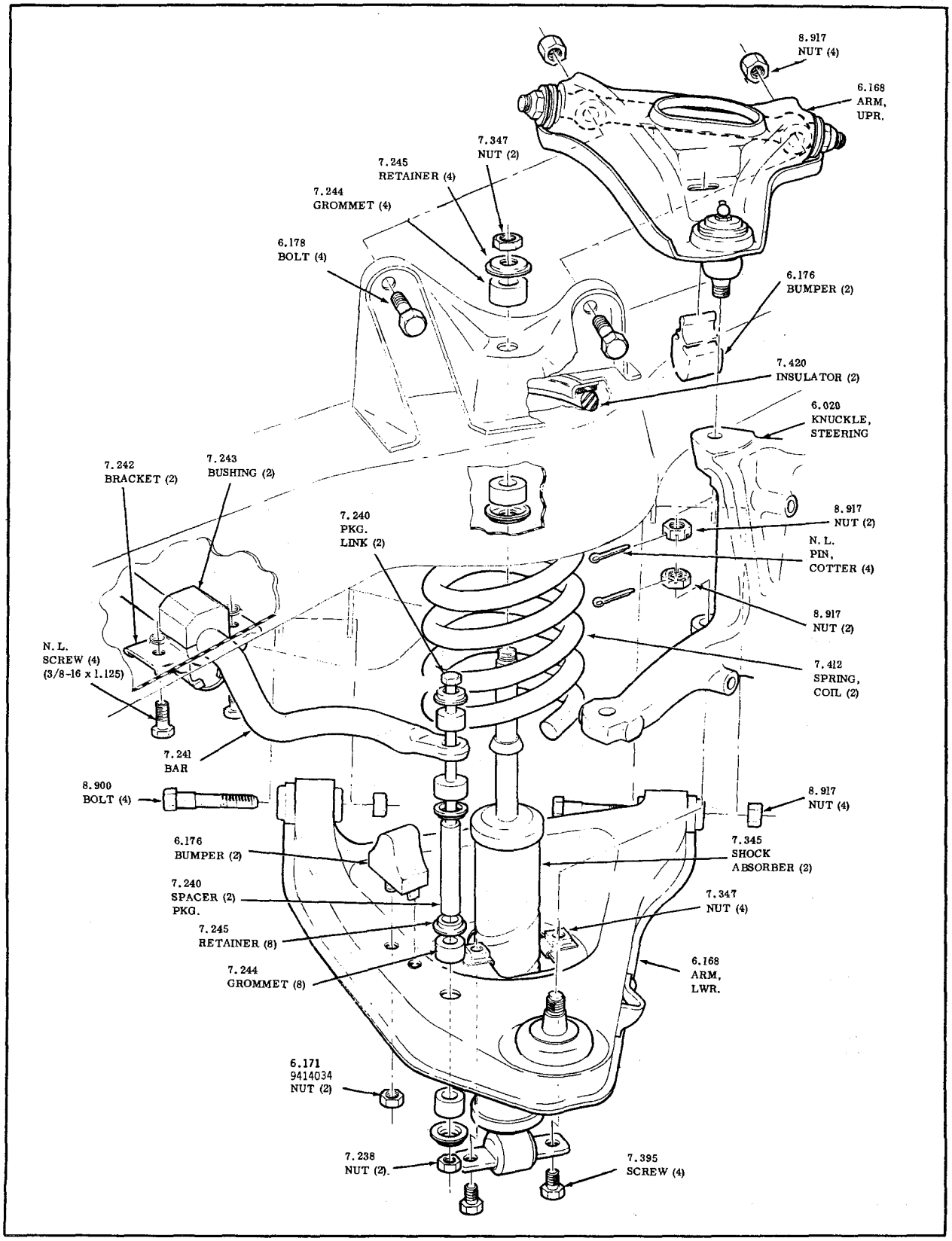

FRONT SUSPENSION

1971-1972 50-60-80-9000

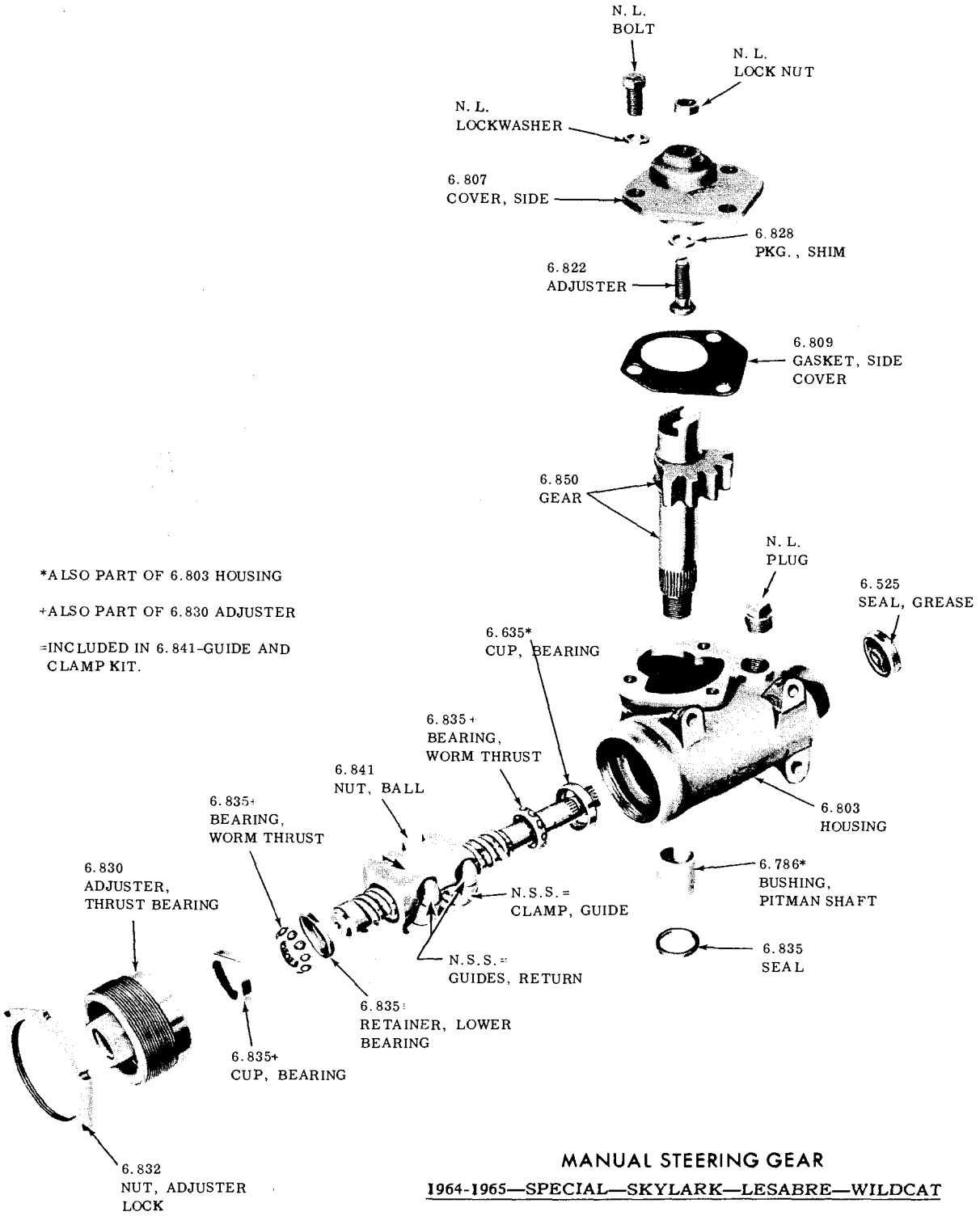

*ALSO PART OF 6.803 HOUSING

+ALSO PART OF 6.830 ADJUSTER

=INCLUDED IN 6.841-GUIDE AND CLAMP KIT.

MANUAL STEERING GEAR

1964-1965—SPECIAL—SKYLARK—LESABRE—WILDCAT

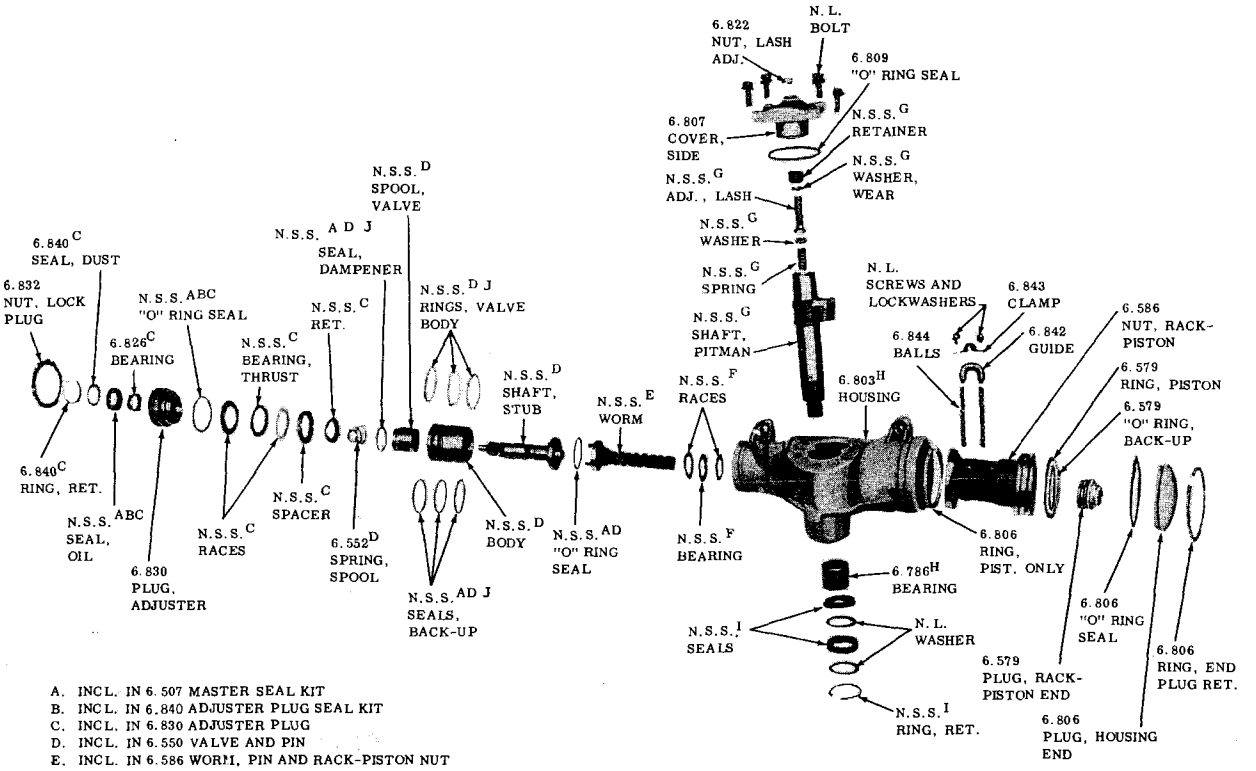

A. INCL. IN 6.507 MASTER SEAL KIT
B. INCL. IN 6.840 ADJUSTER PLUG SEAL KIT
C. INCL. IN 6.830 ADJUSTER PLUG
D. INCL. IN 6.550 VALVE AND PIN
E. INCL. IN 6.586 WORM, PIN AND RACK-PISTON NUT
F. INCL. IN 6.835 LWR. THRUST BEARING
G. INCL. IN 6.850 PITMAN SHAFT
H. INCL. IN 6.803 HOUSING
I. INCL. IN 6.855 PITMAN SHAFT SEAL
J. INCL. IN 6.552 - VALVE RING AND BACK-UP SEAL KIT

1964 POWER STEERING GEAR

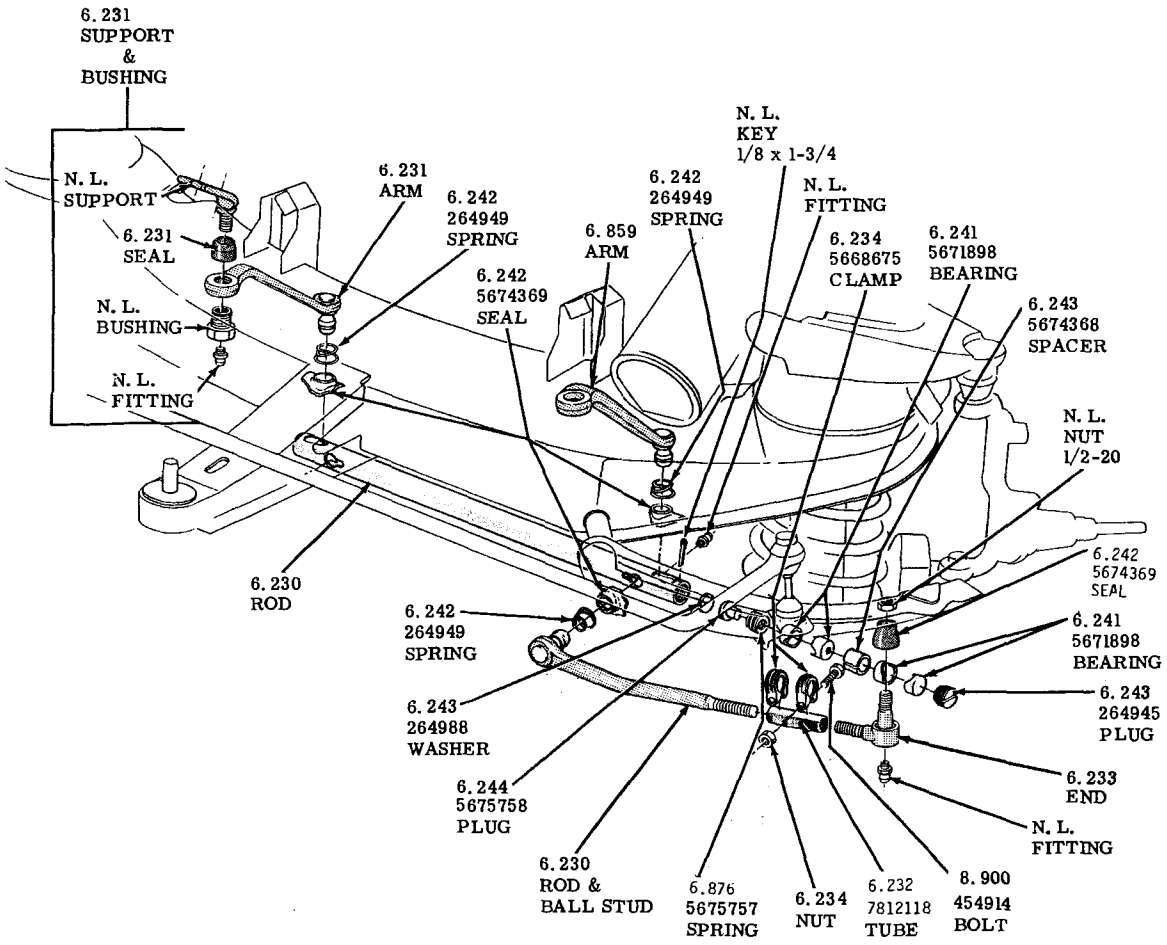

TYPICAL STEERING LINKAGE
1961-63 40-41-4300

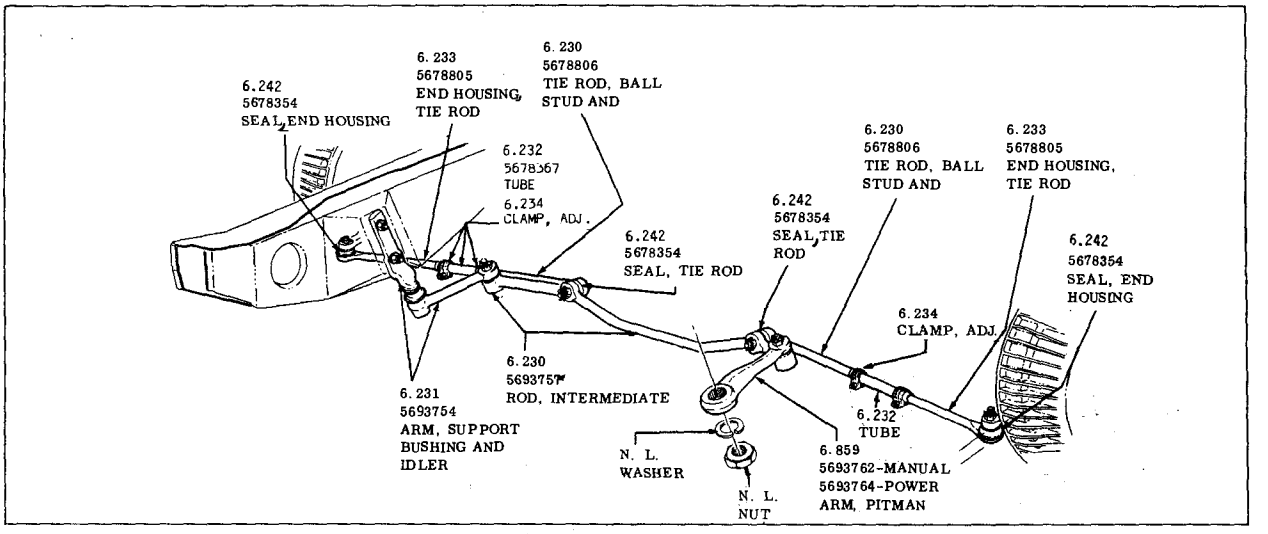

SPECIAL—SKYLARK— SKYLARK GRAN SPORT

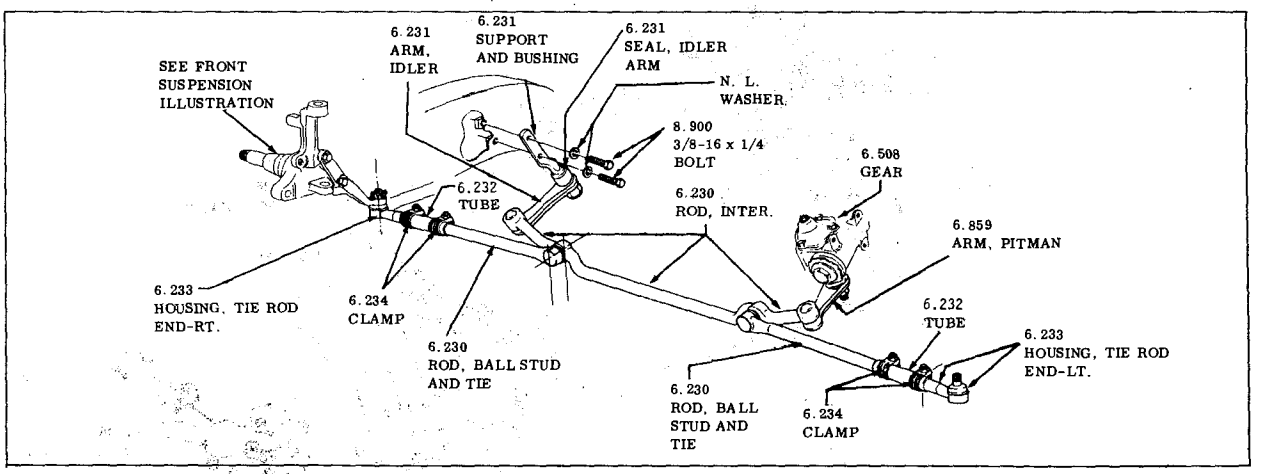

LE SABRE—WILDCAT—ELECTRA 225

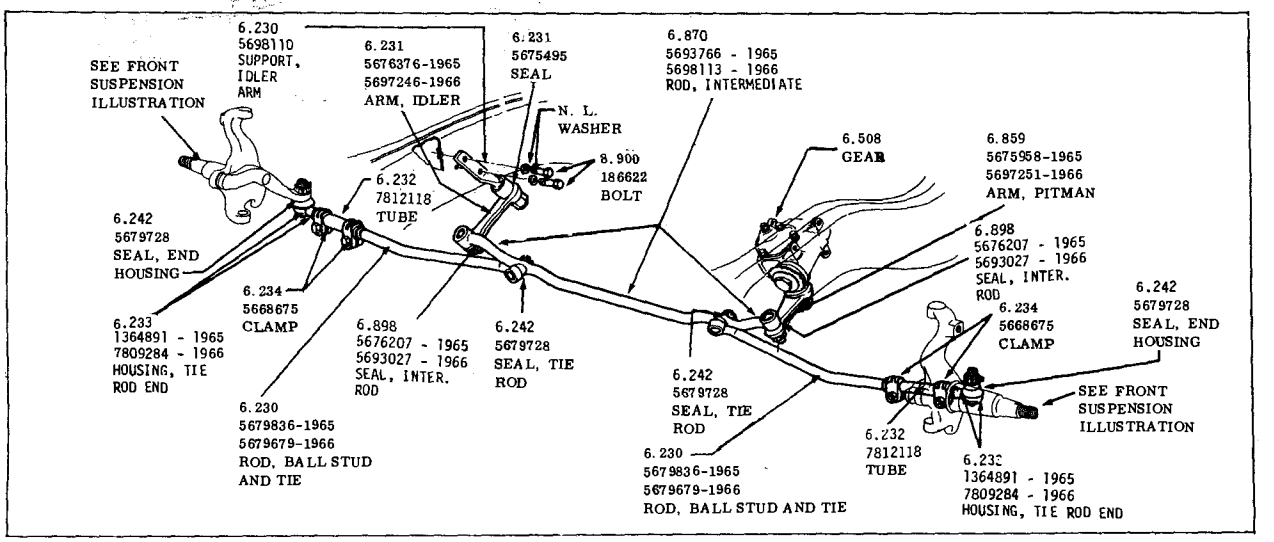

1965-1966 RIVIERA

STEERING LINKAGE CHART

1966—ALL

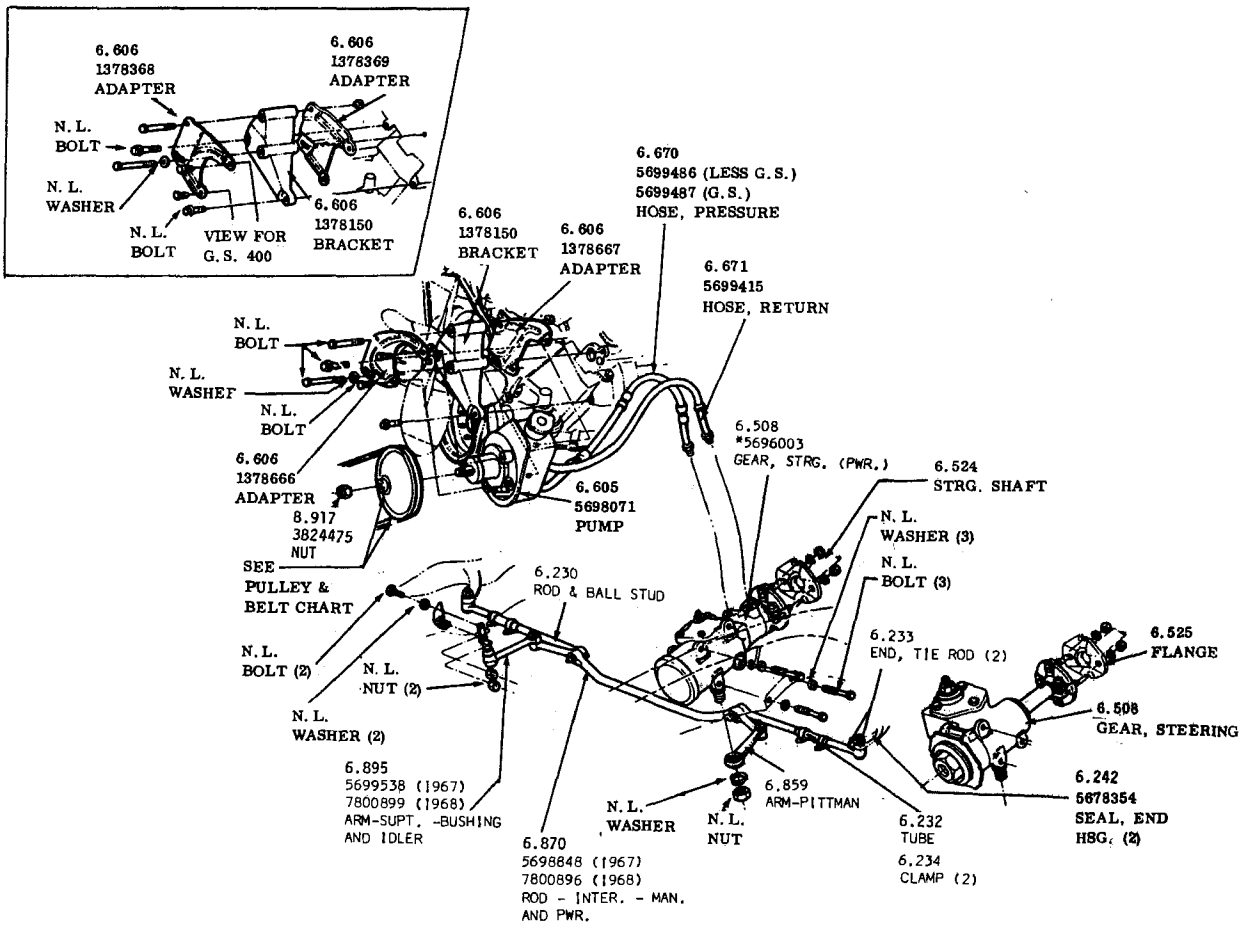

REGULAR AND POWER STEERING
1967-1968 — Special — Skylark — G.S. 400

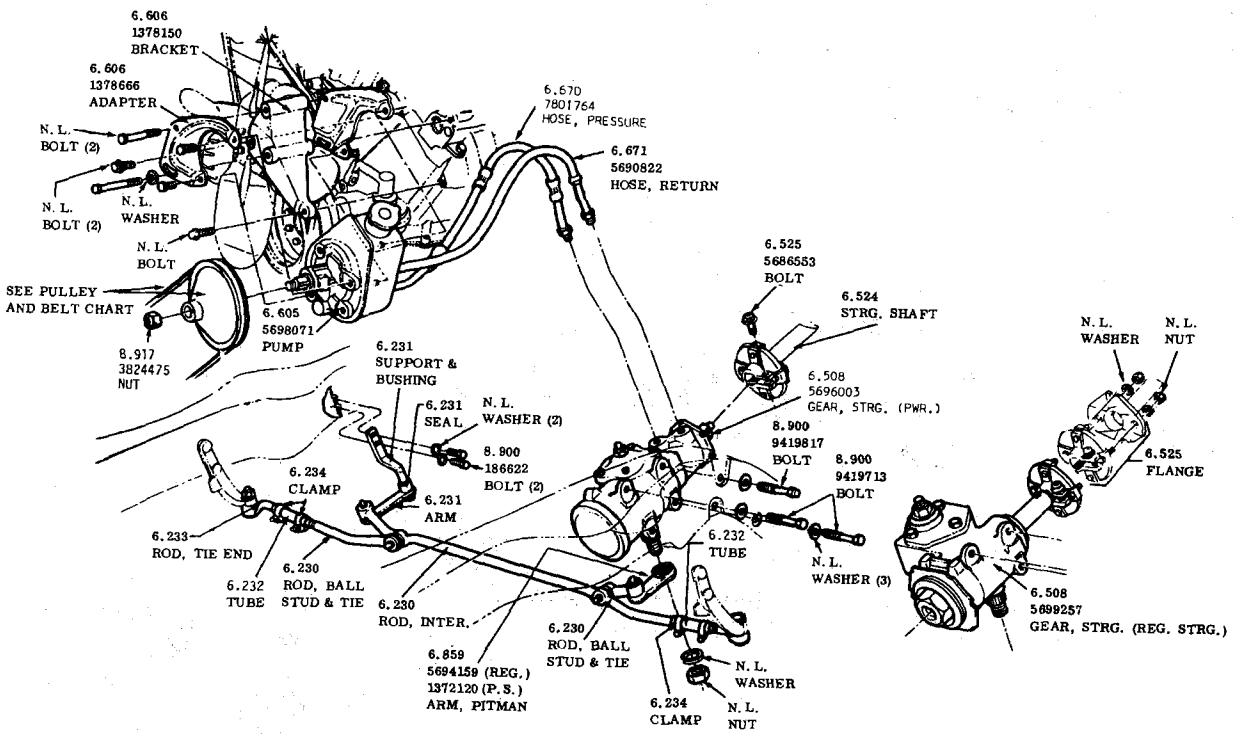

REGULAR AND POWER STEERING
1967-1968 — LeSabre

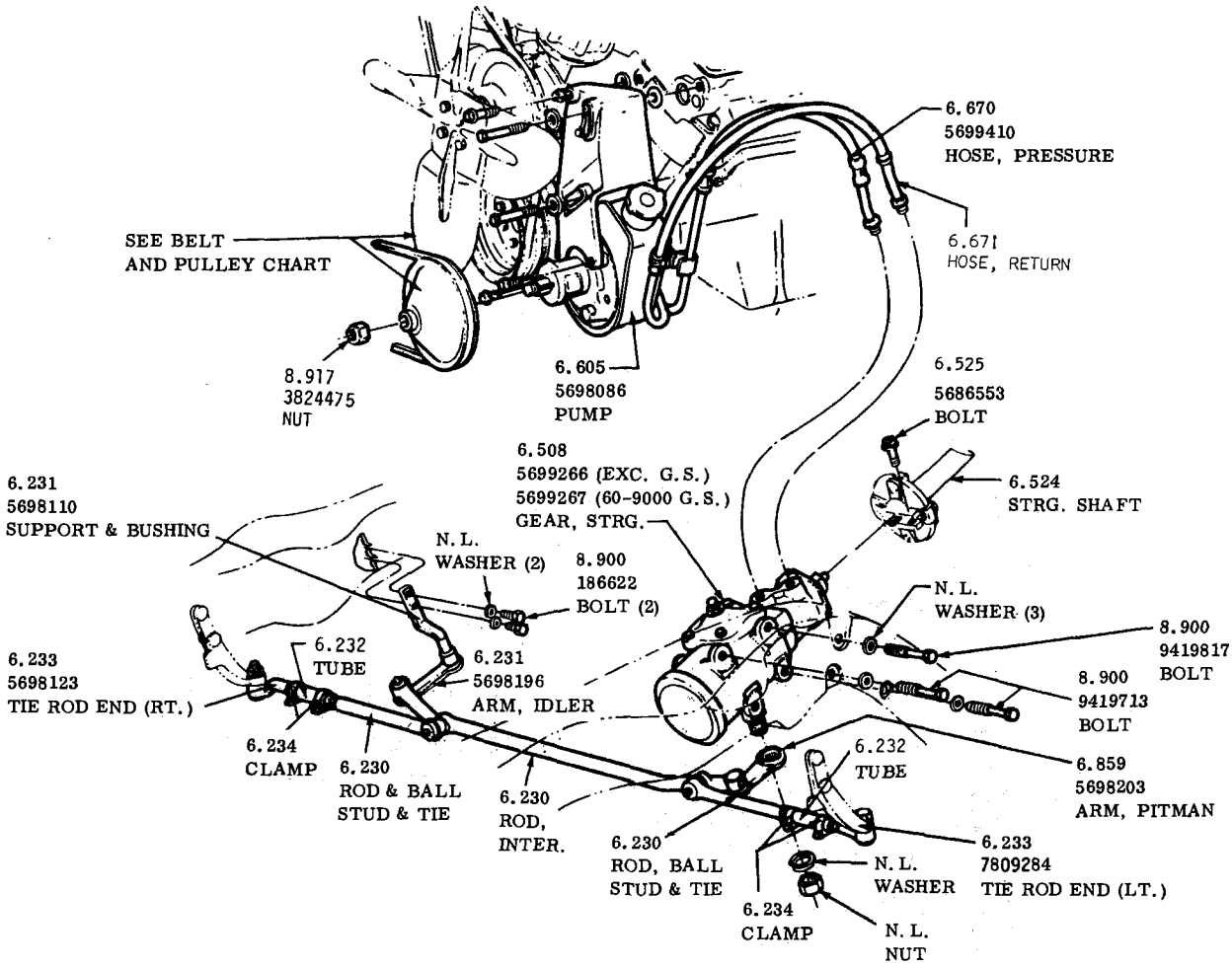

1967-1968 — Wildcat — Electra 225—Riviera

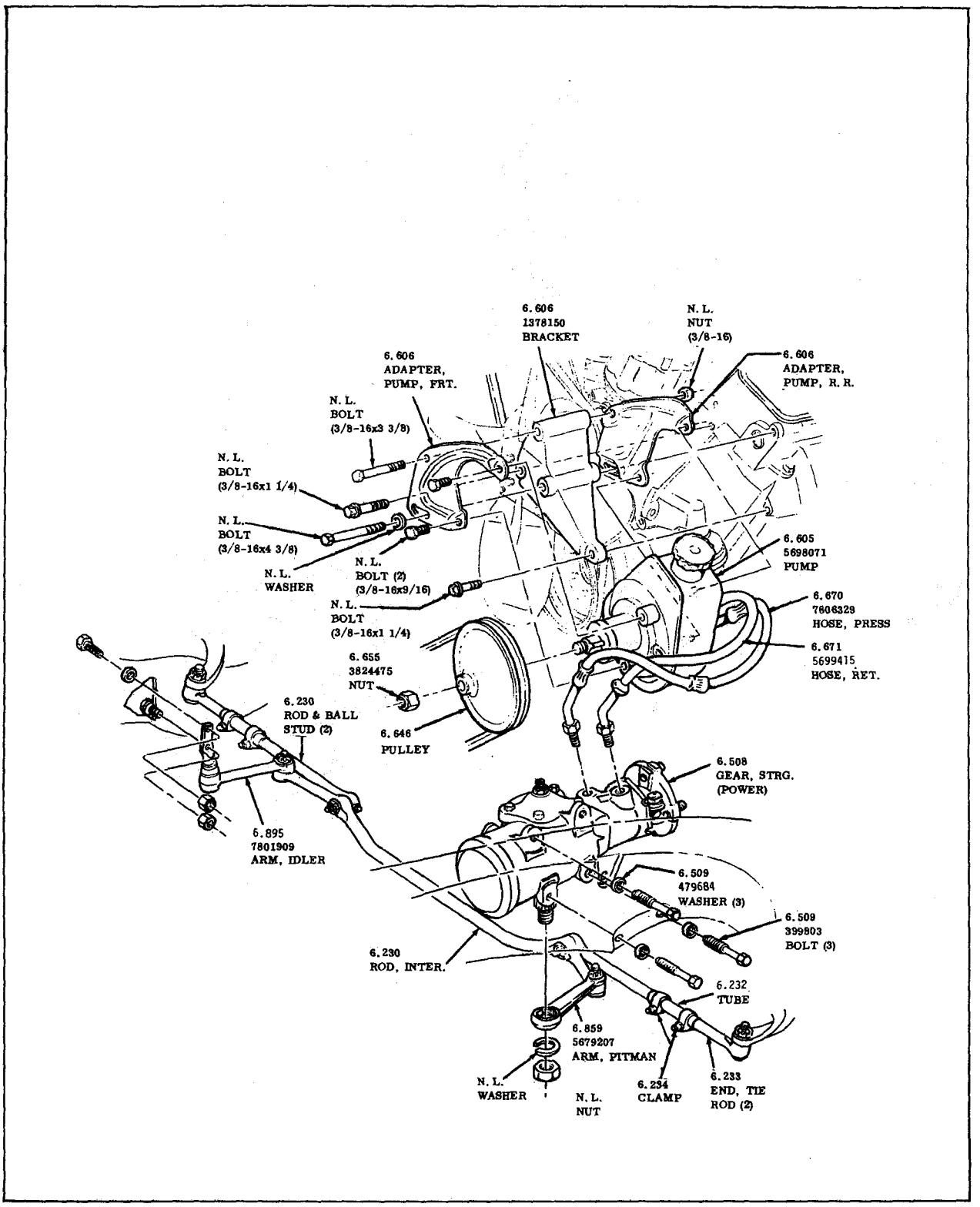

REGULAR AND POWER STEERING
1969-1970-30-4000

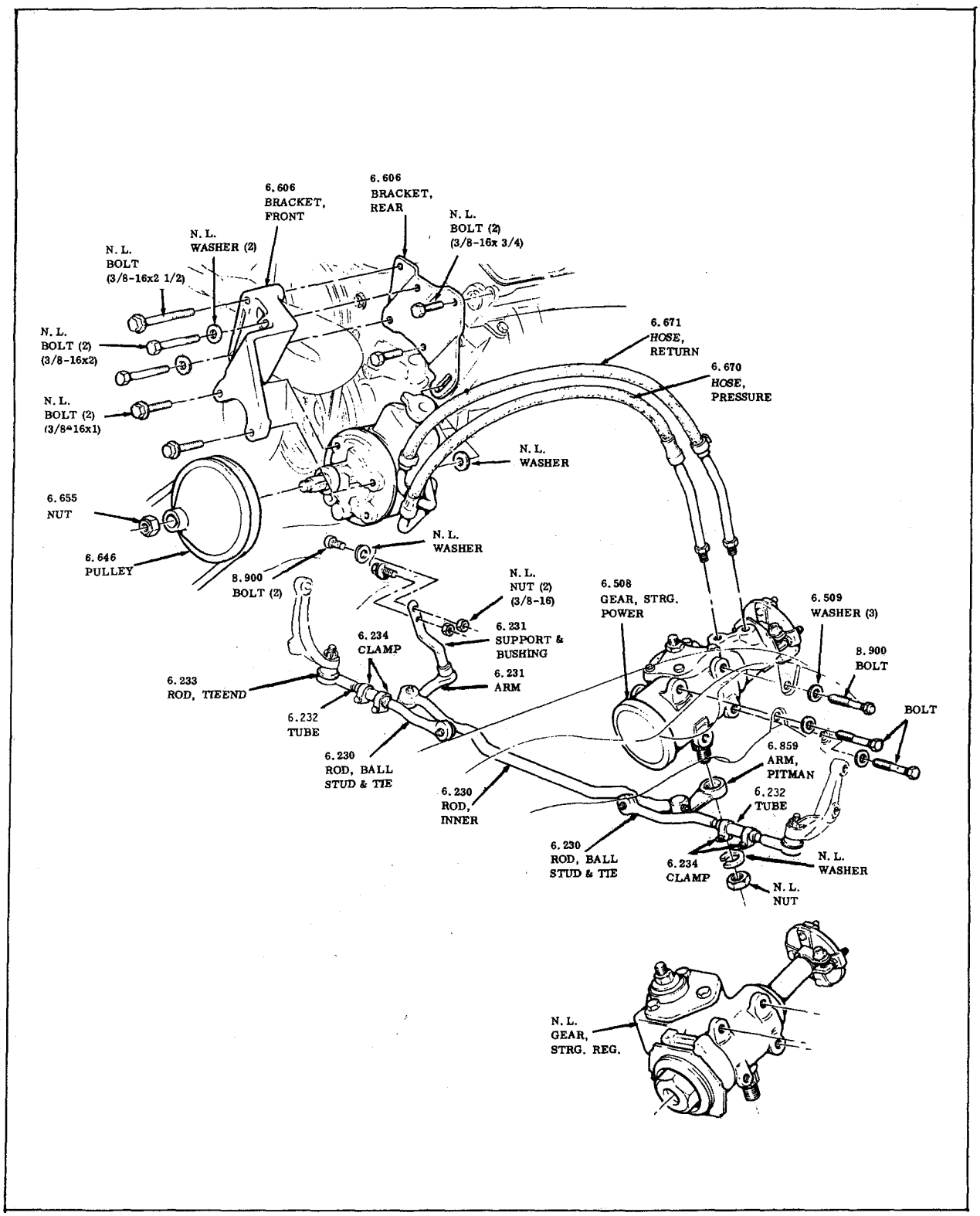

REGULAR & POWER STEERING
1969-1970 -50-60-80-9000

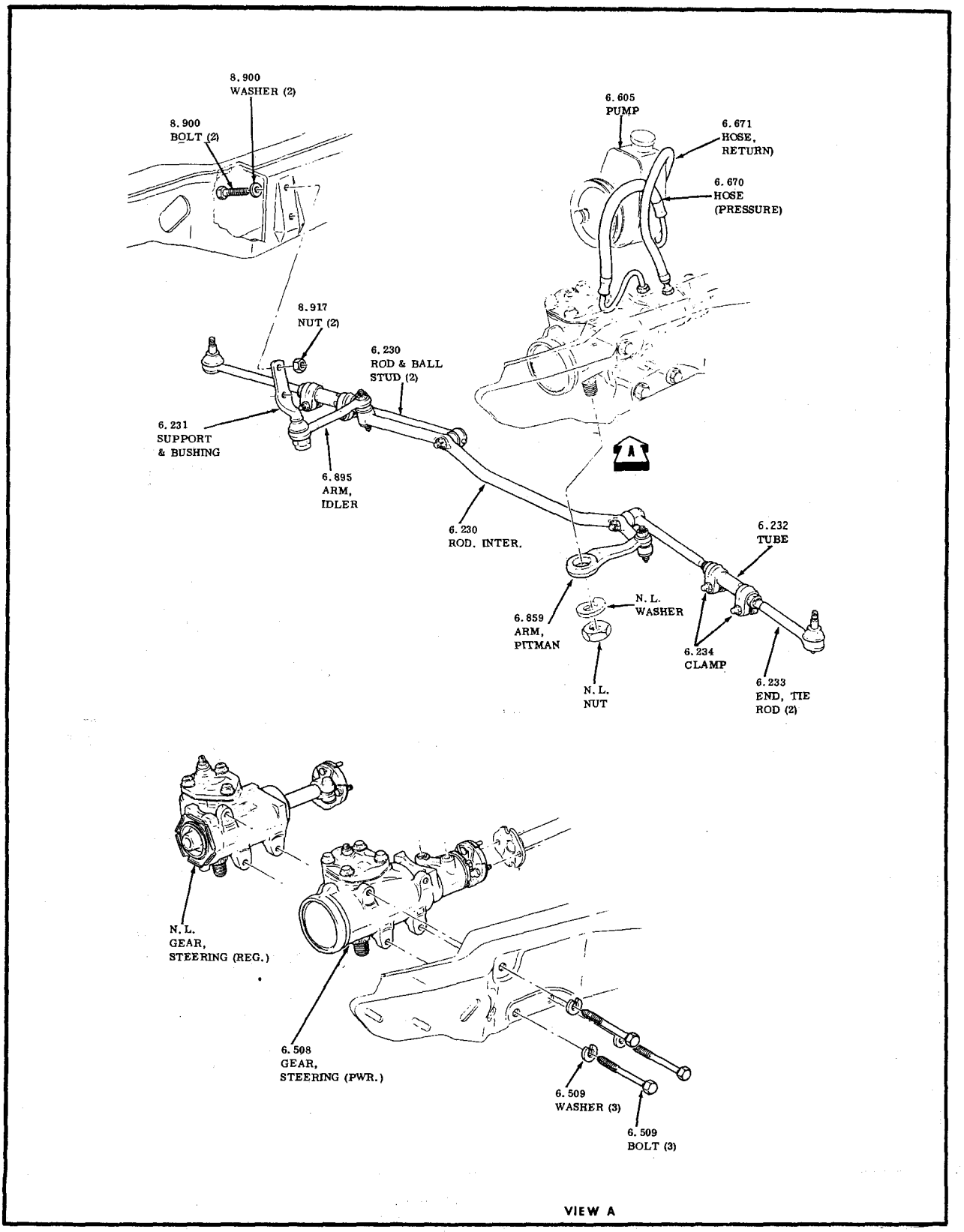

VIEW A

REGULAR AND POWER STEERING GEAR

1971 - 1972 ALL

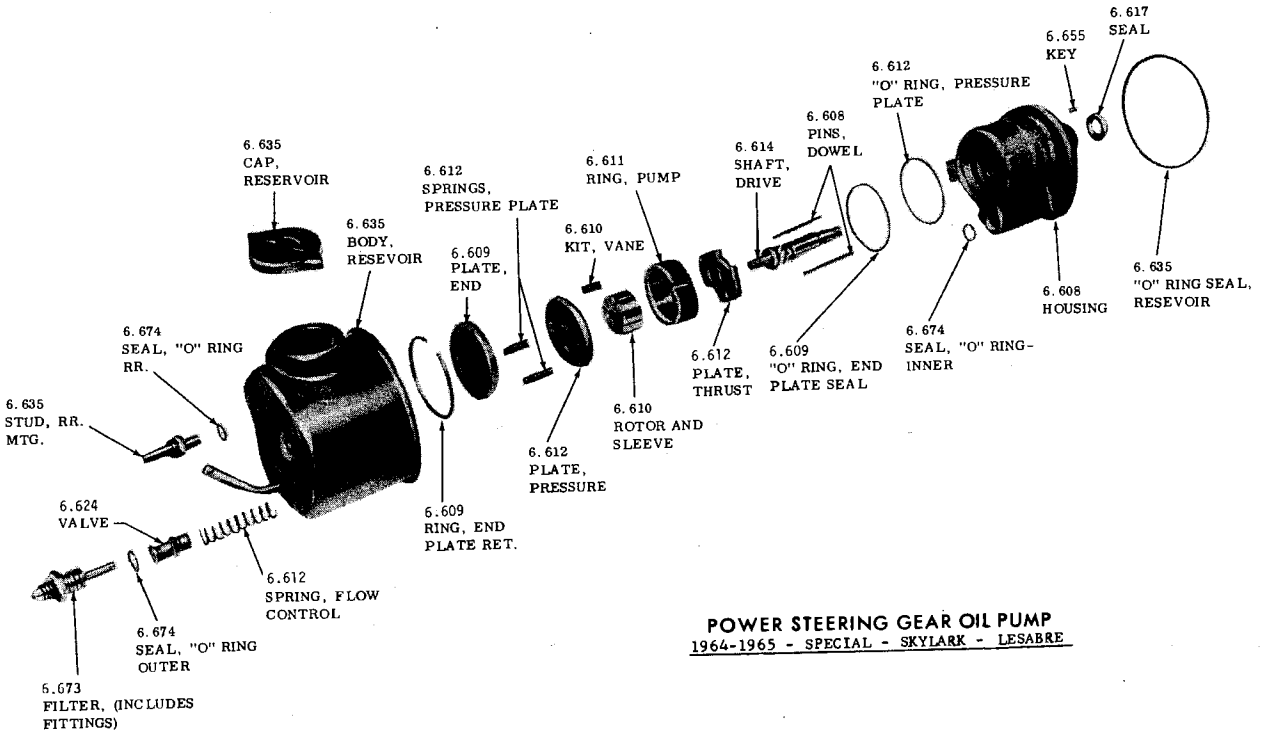

POWER STEERING GEAR OIL PUMP
1964-1965 - SPECIAL - SKYLARK - LESABRE

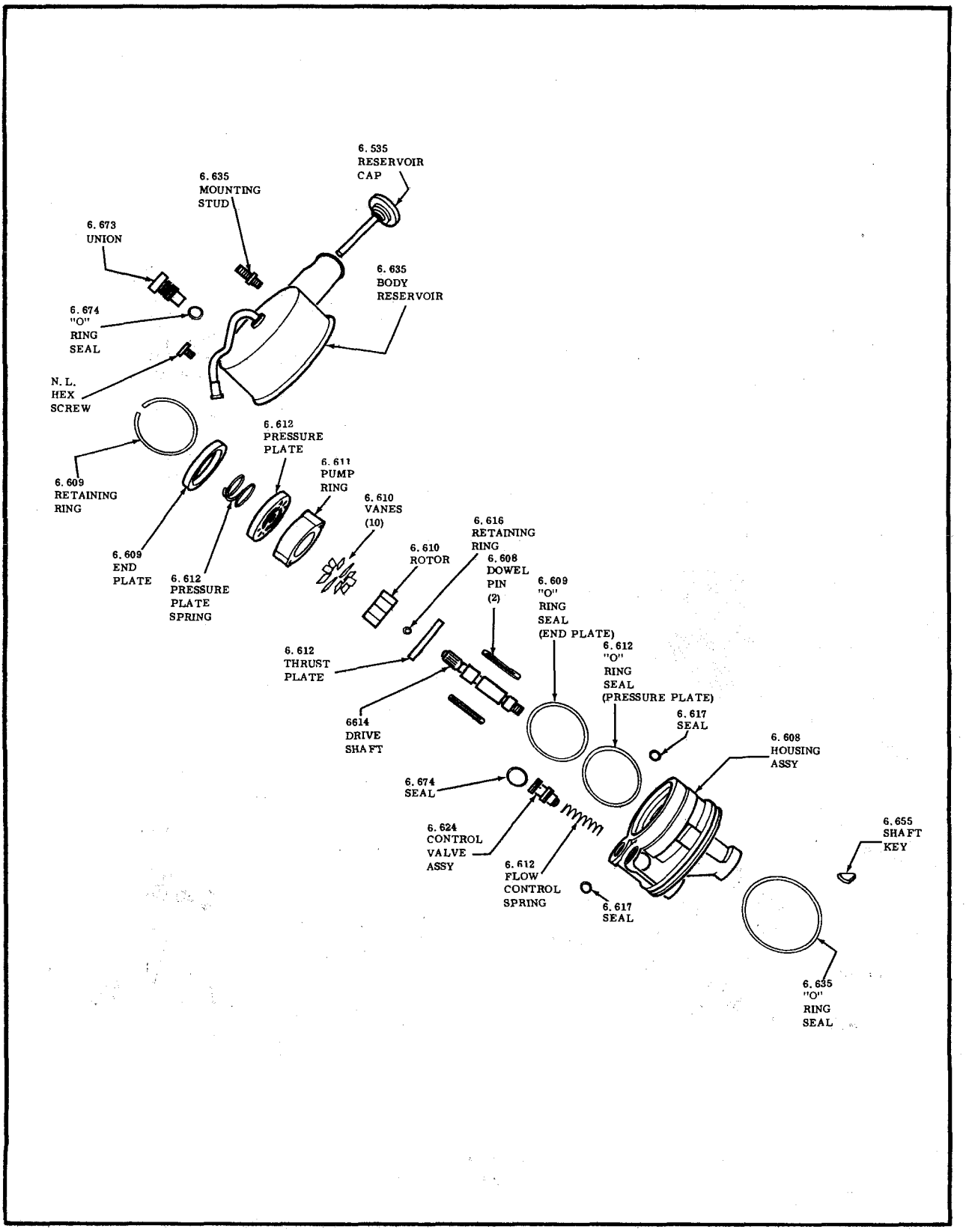

TYPICAL POWER STEERING
GEAR OIL PUMP
1967-1972-ALL

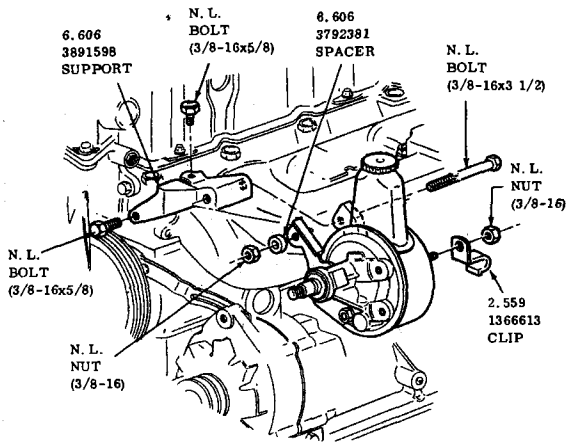

AUTOMATIC TRANSMISSION

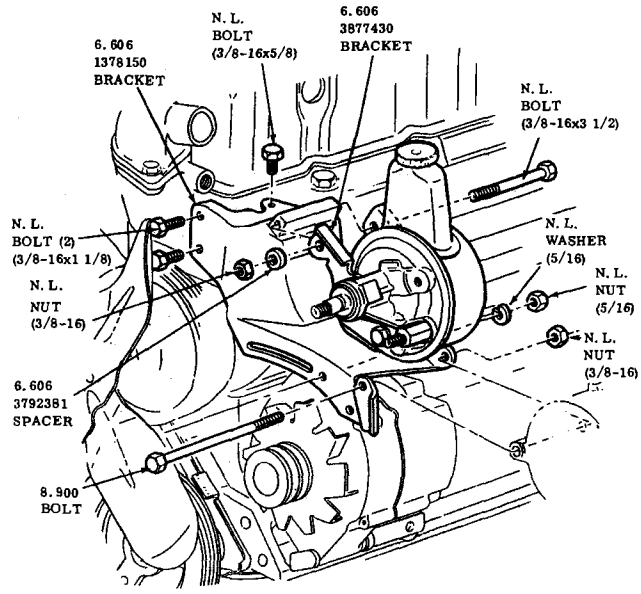

MANUAL TRANSMISSION

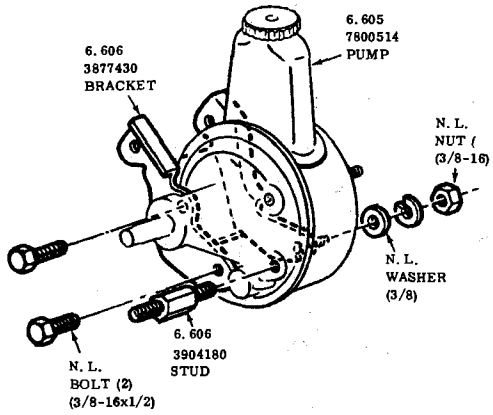

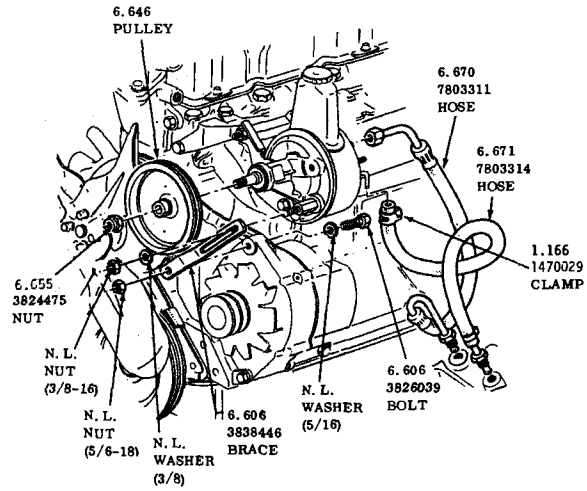

STEERING GEAR PUMP
1968-1970 L-6 (250 CU. IN. ENG.)

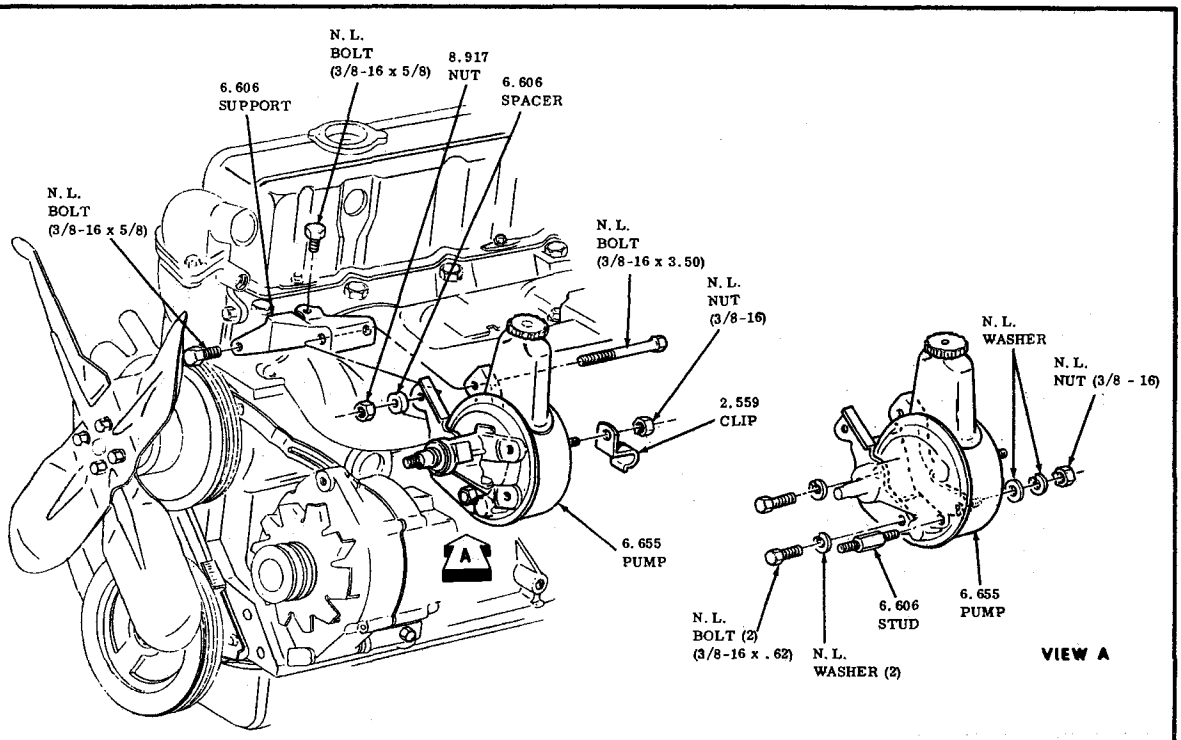

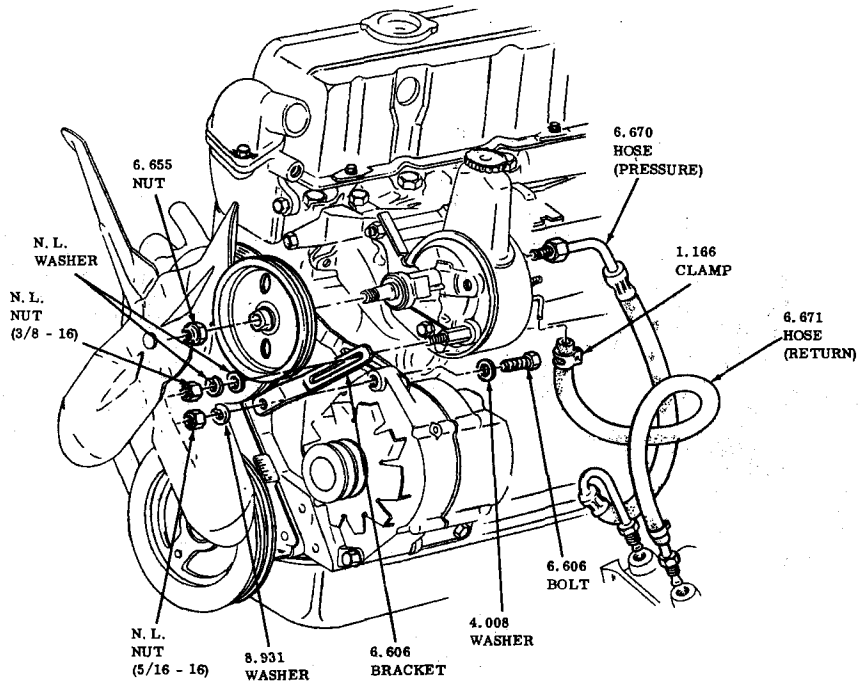

POWER STEERING PUMP AND HOSES

1971-250 CU. IN. ENGINE

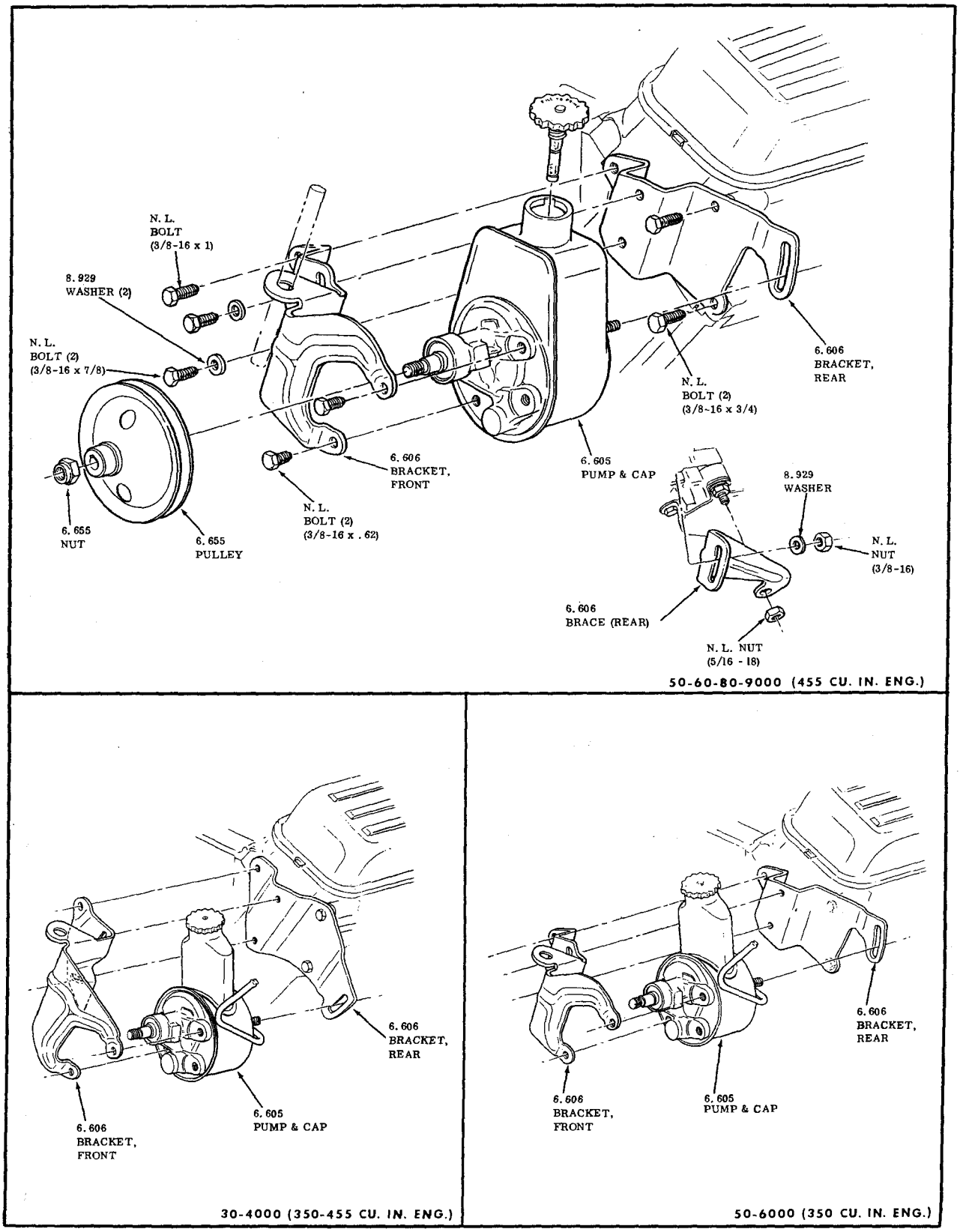

POWER STEERING PUMP & BRACKETS

1971-50-60-80-9000

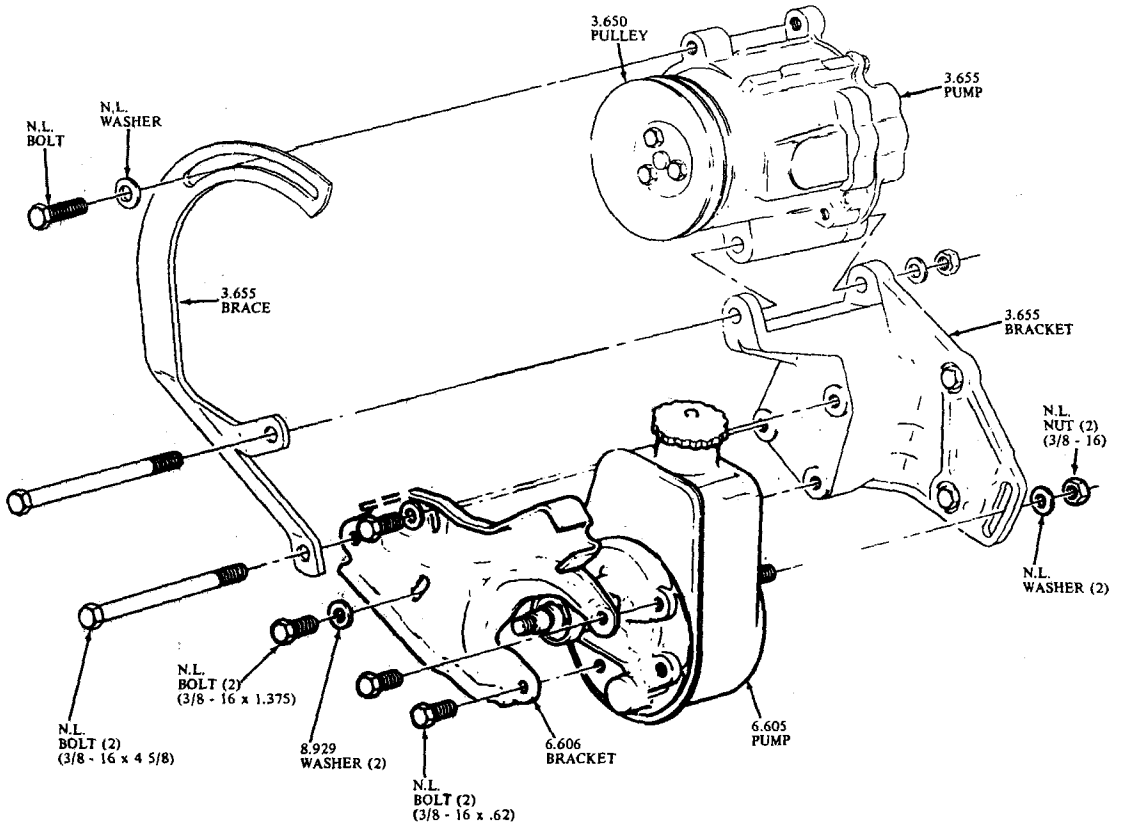

POWER STEERING PUMP

1972-ALL

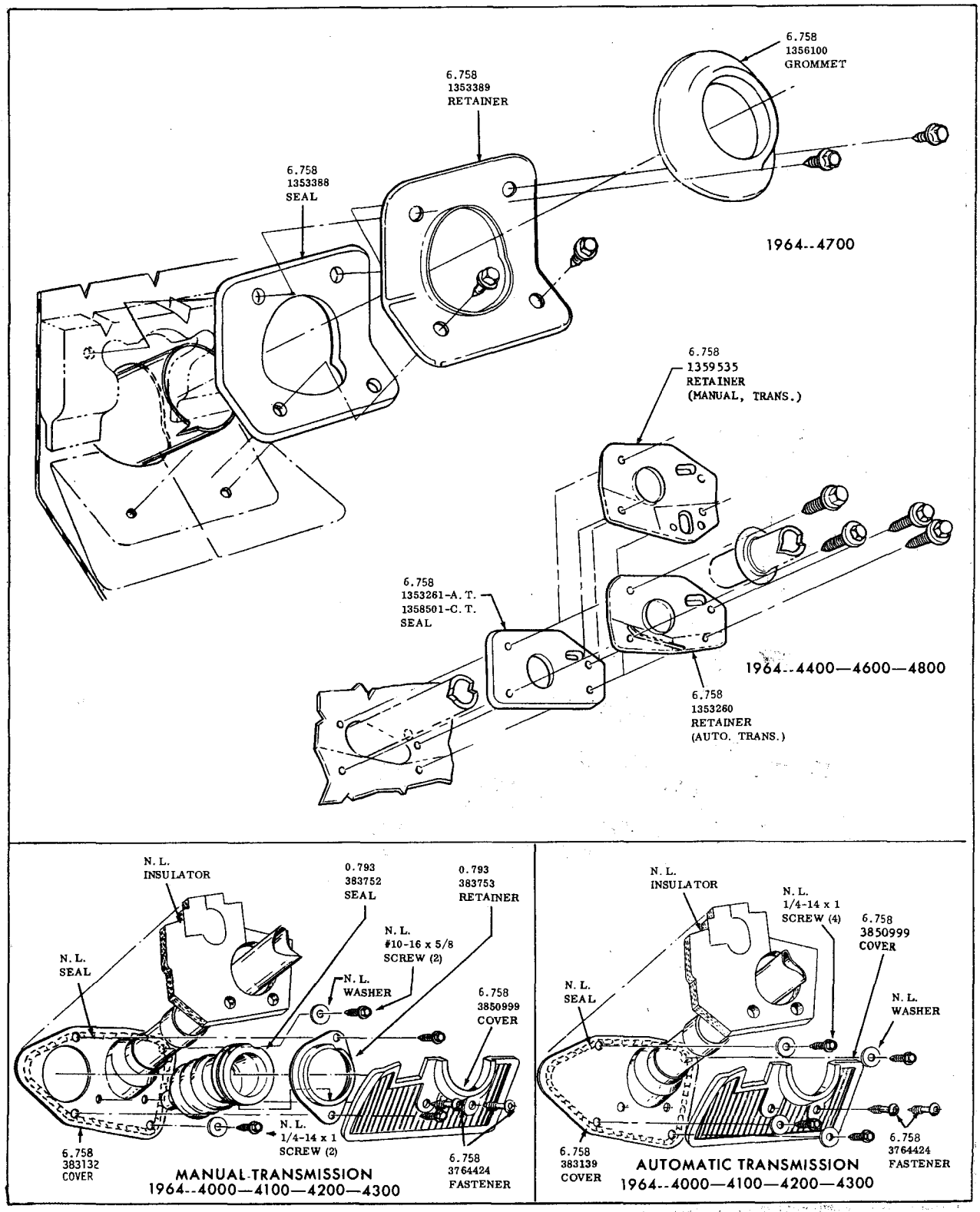

1964 STEERING COLUMN TO TOE PAN ATTACHMENTS

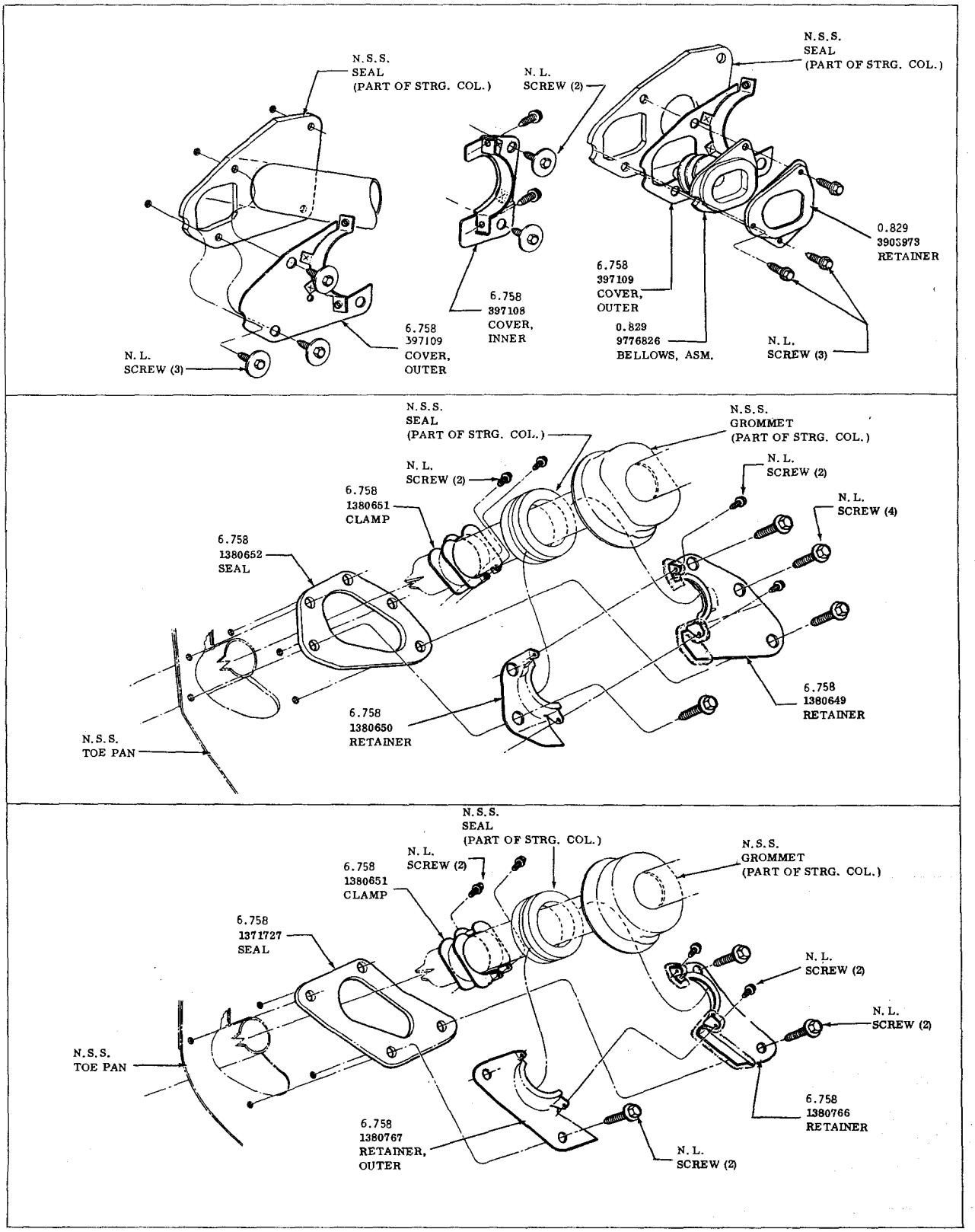

STEERING COLUMN ATTACHMENT TO FLOOR PAN

1967—ALL

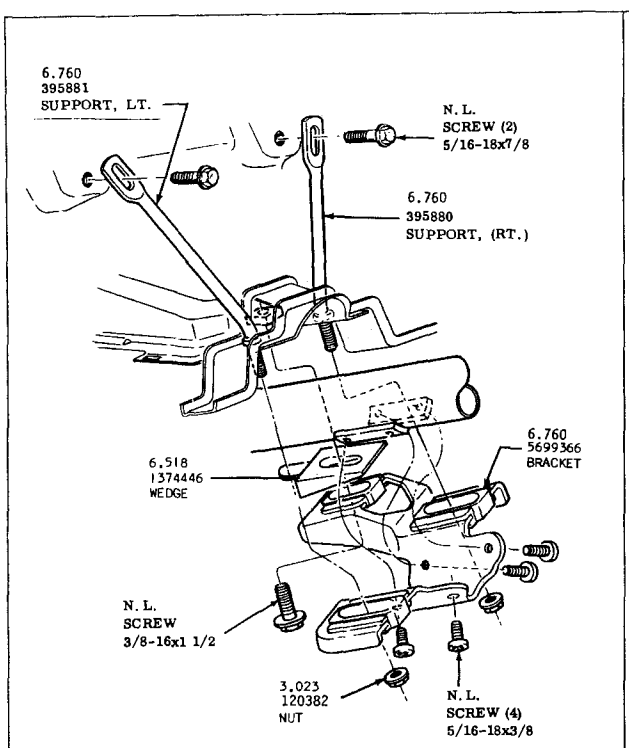

Special—Skylark—G.S. 400

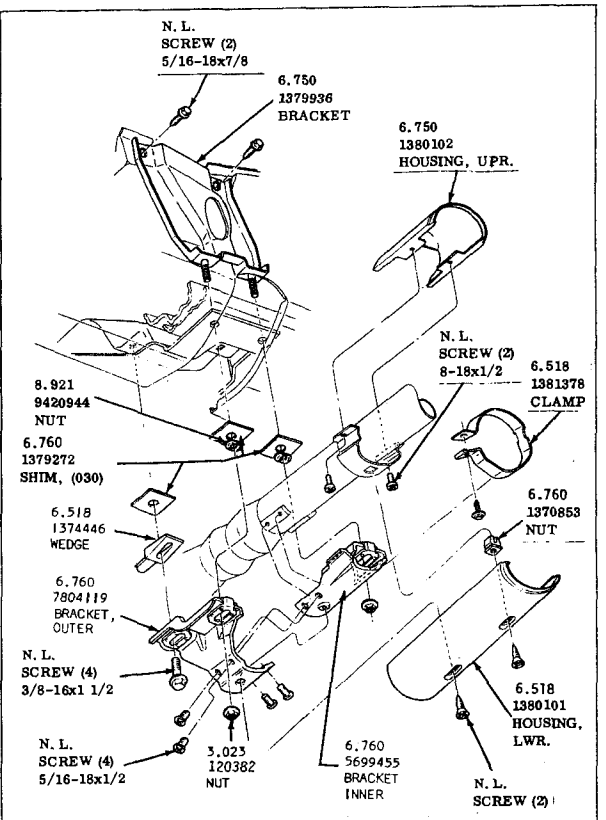

LeSabre—Wildcat—Electra 225

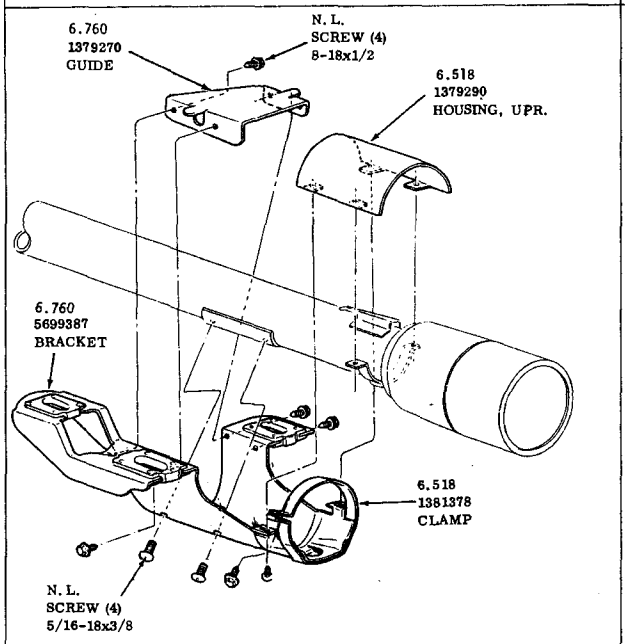

Riviera

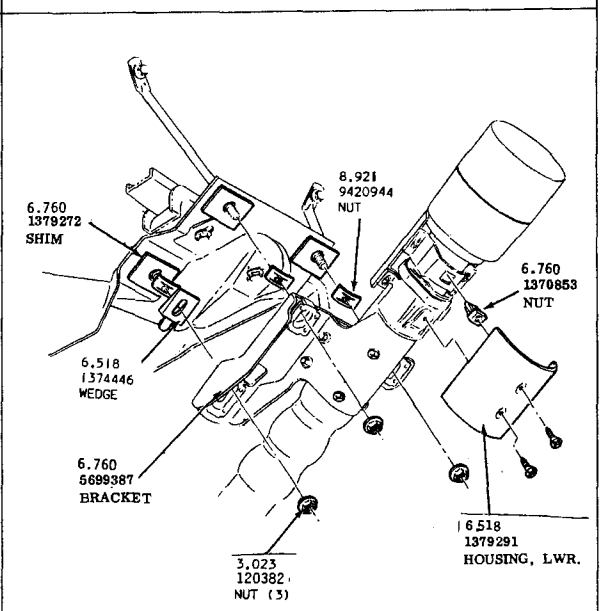

Riviera

STEERING COLMN SUPPORT

1967-1968 — ALL

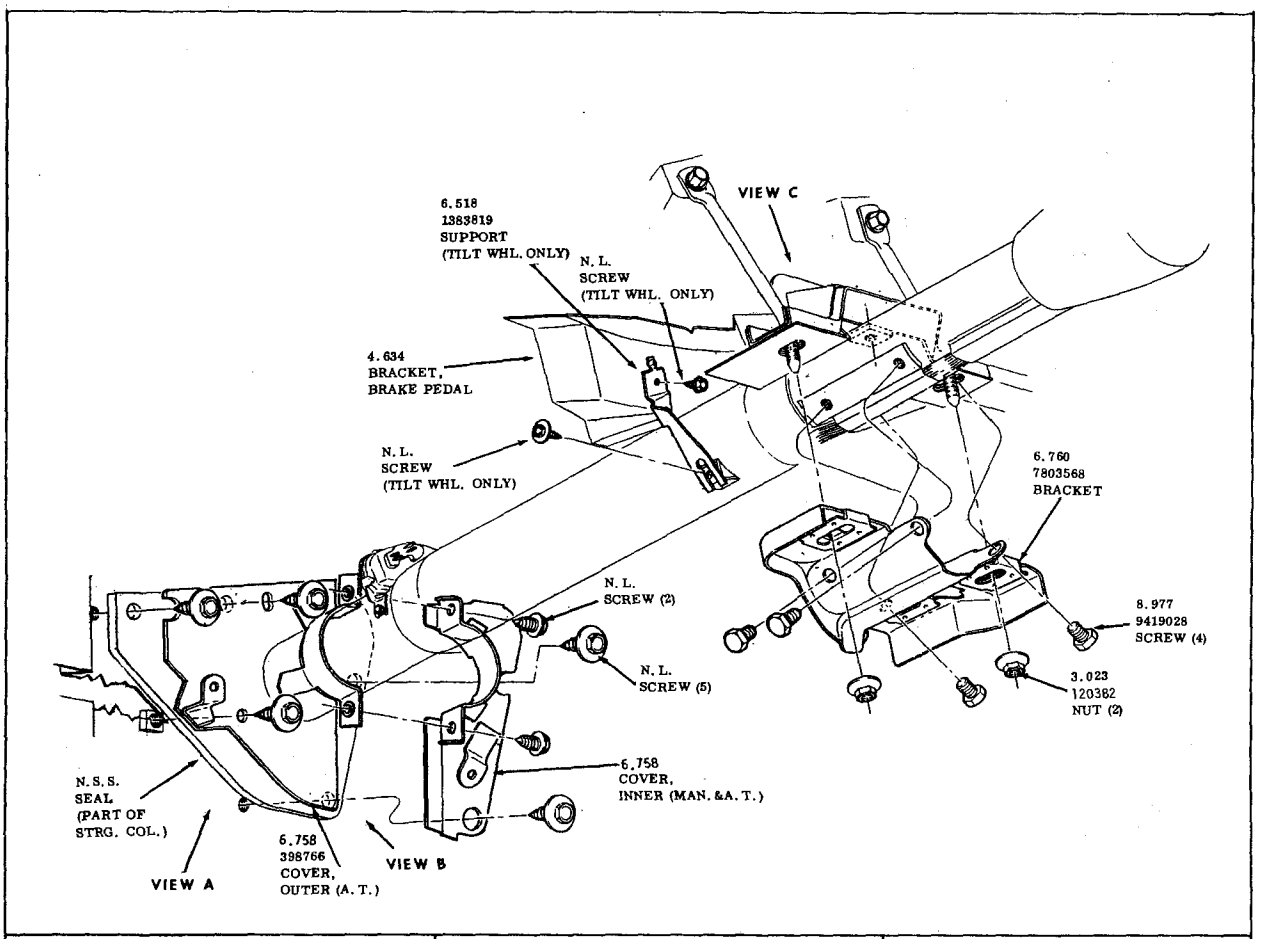

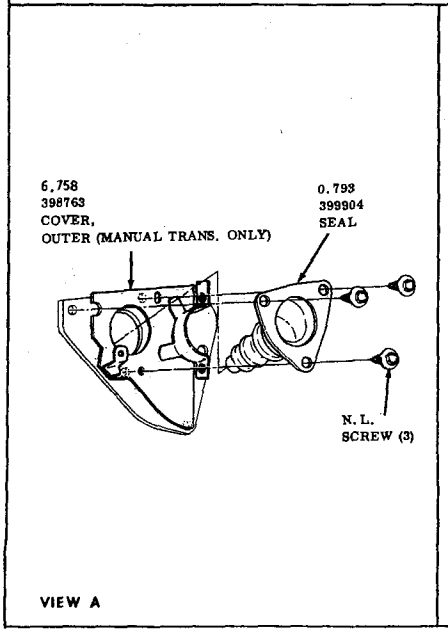

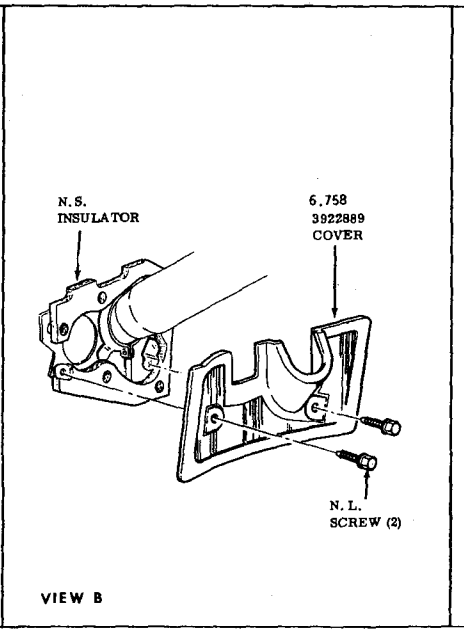

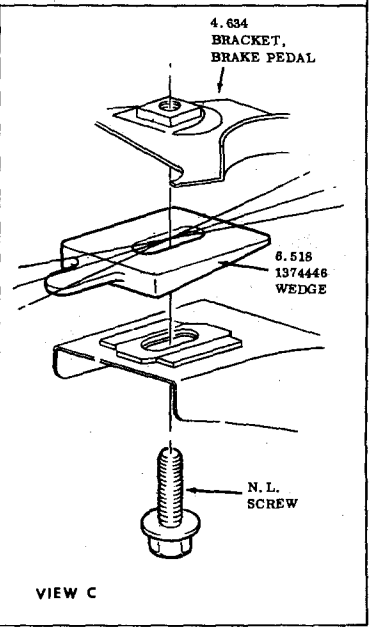

STEERING COLUMN
INSTALLATION
1968-30-4000

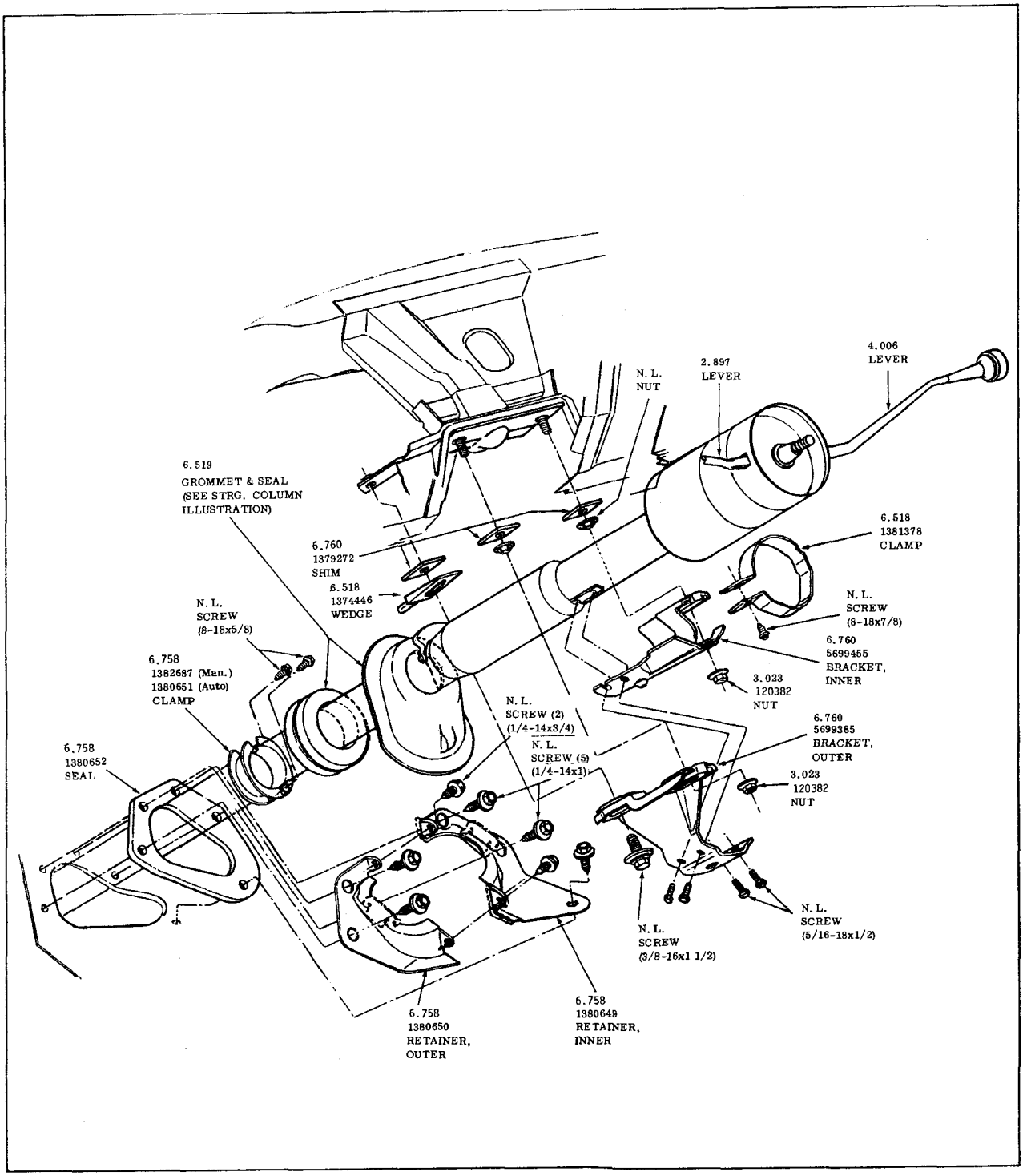

STEERING COLUMN INSTALLATION
1968 - LESABRE-WILDCAT-ELECTRA 225

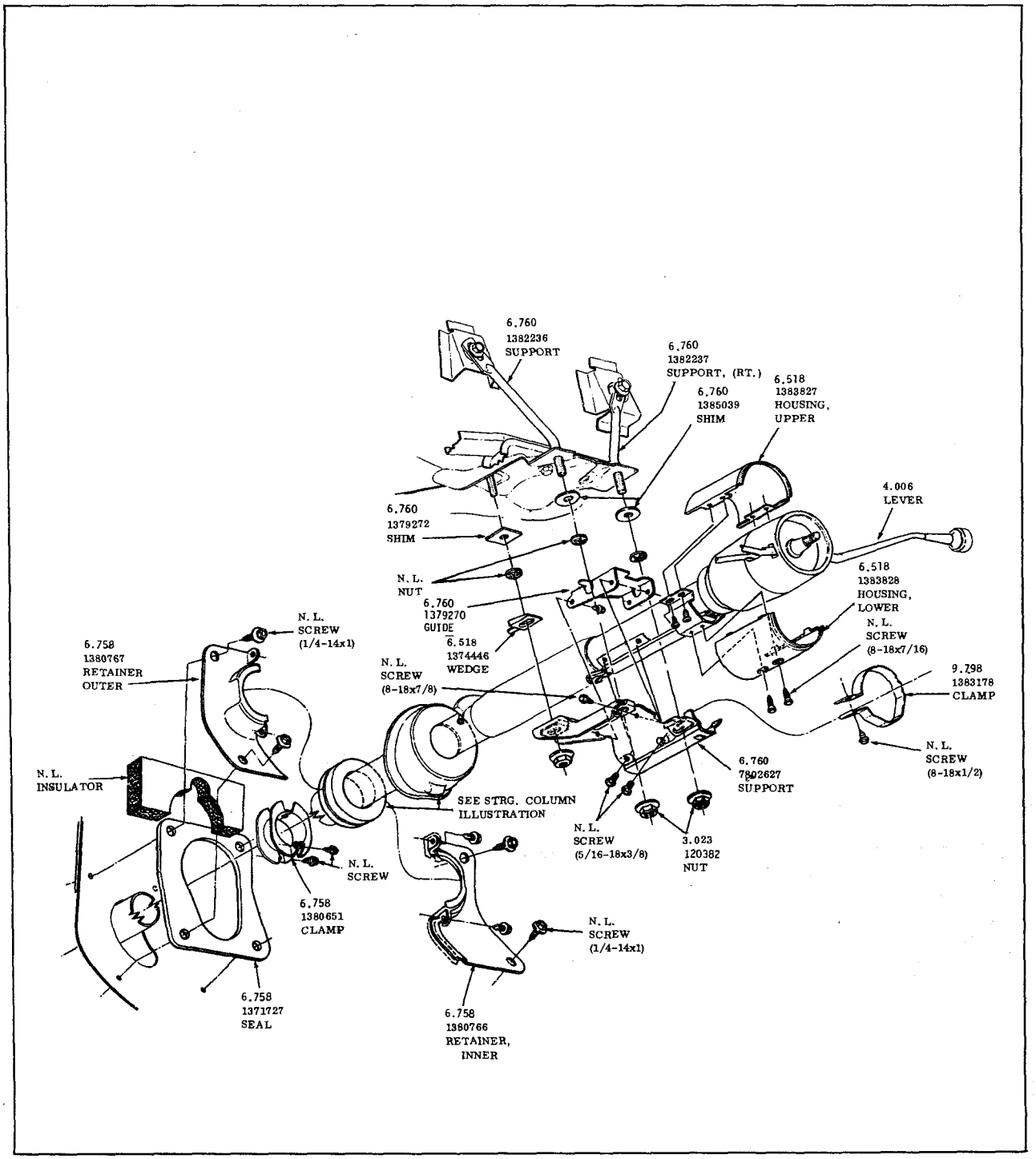

STEERING COLUMN INSTALLATION
1968 - RIVIERA

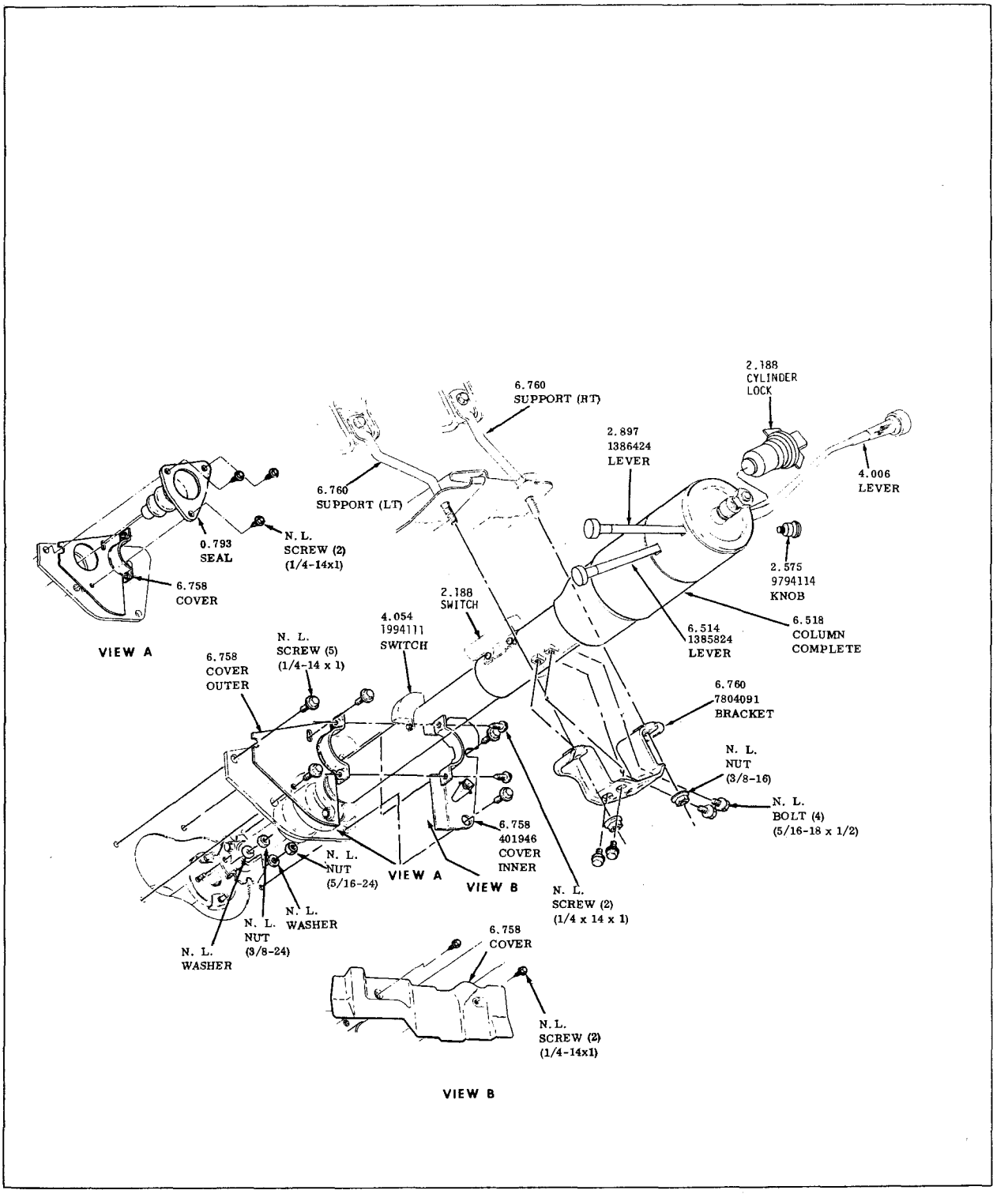

STEERING COLUMN INSTALLATION
1969-1972 30-4000

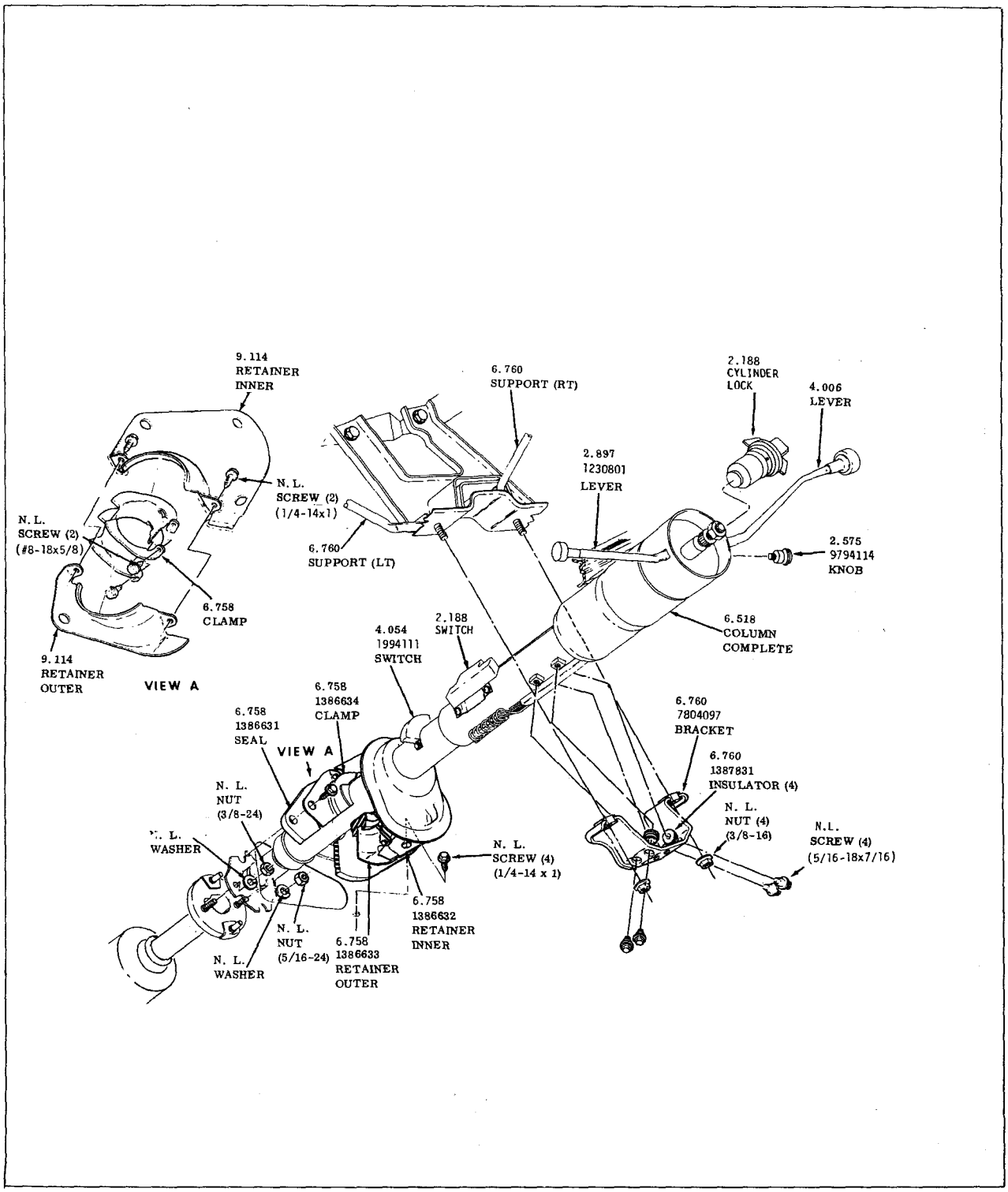

STEERING COLUMN INSTALLATION
1969-1970 - 50-60-8000

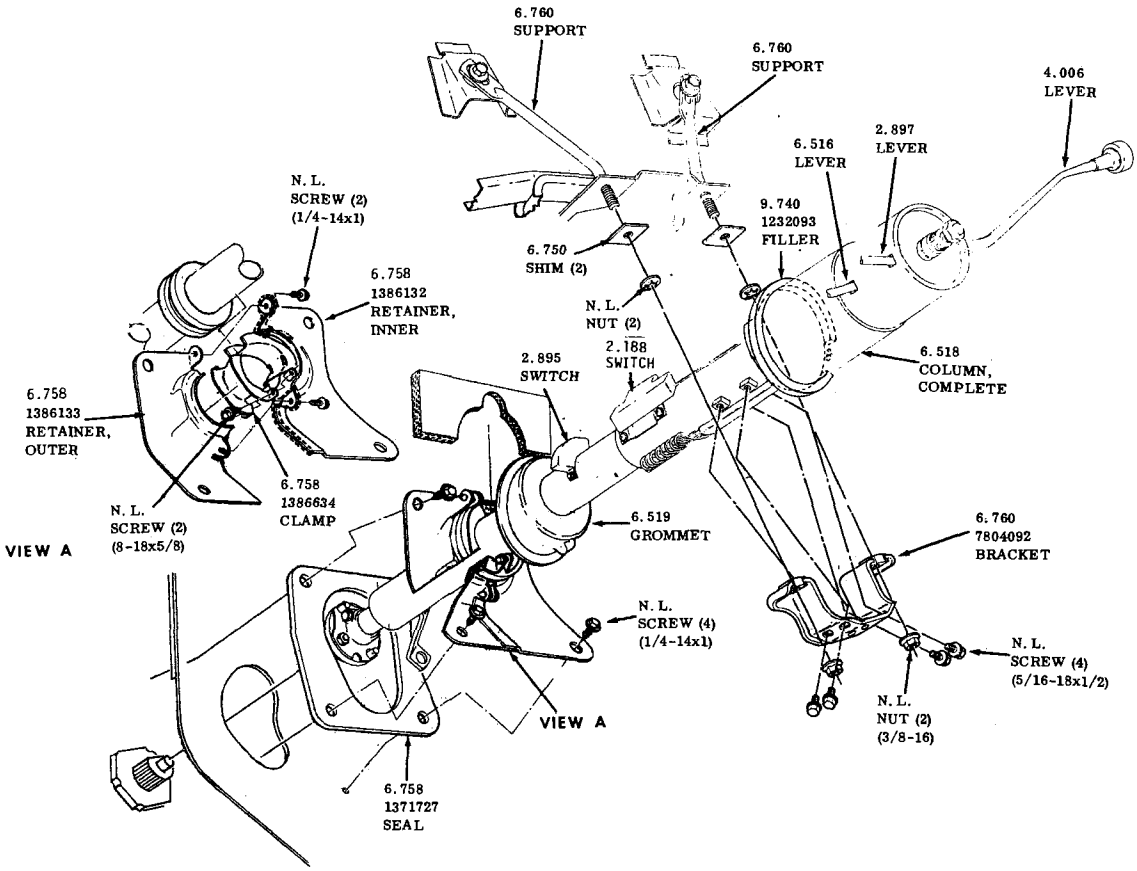

STEERING COLUMN INSTALLATION
1969-1970 -RIVIERA

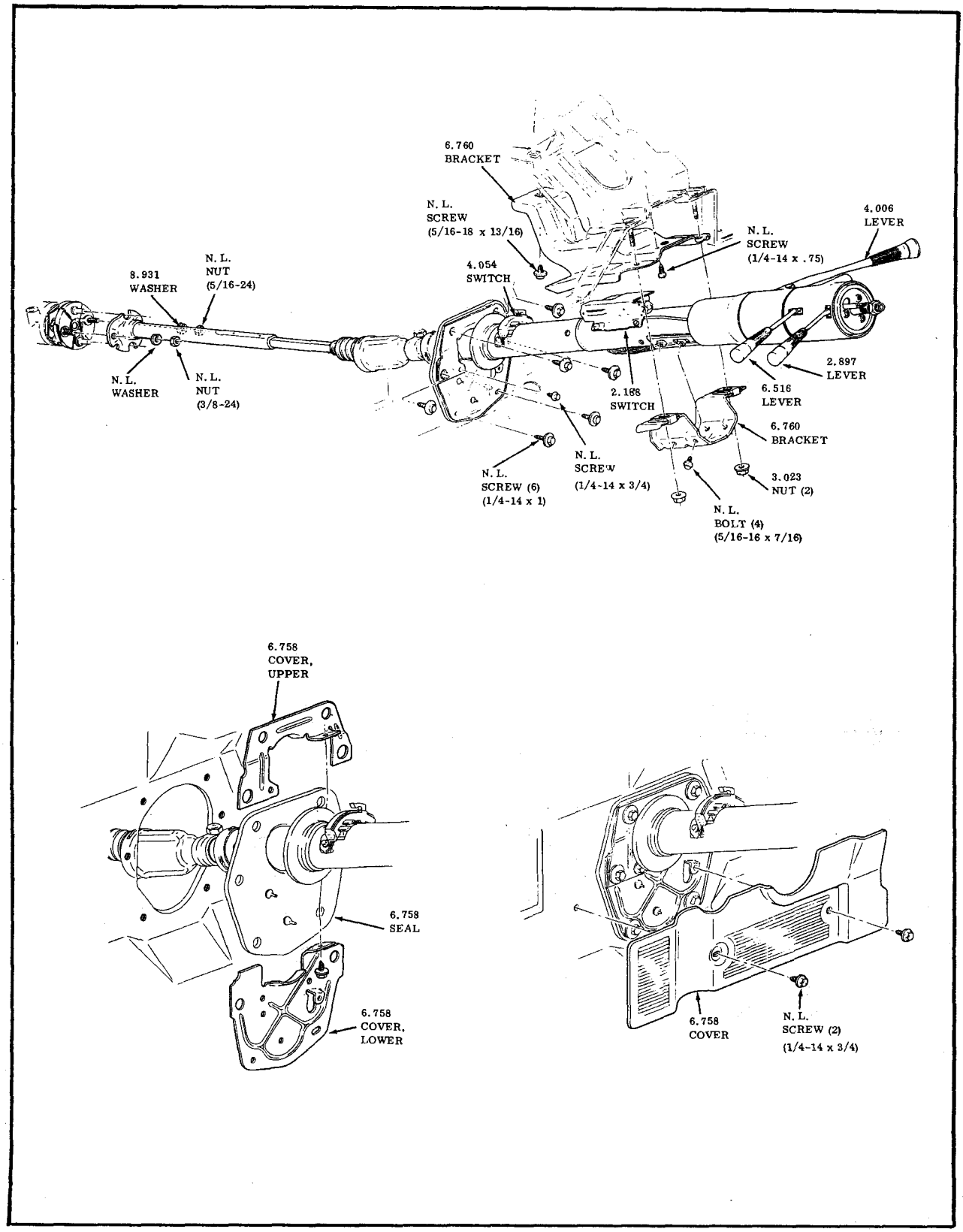

STEERING COLUMN INSTALLATION

1971-1972 50-60-80-9000

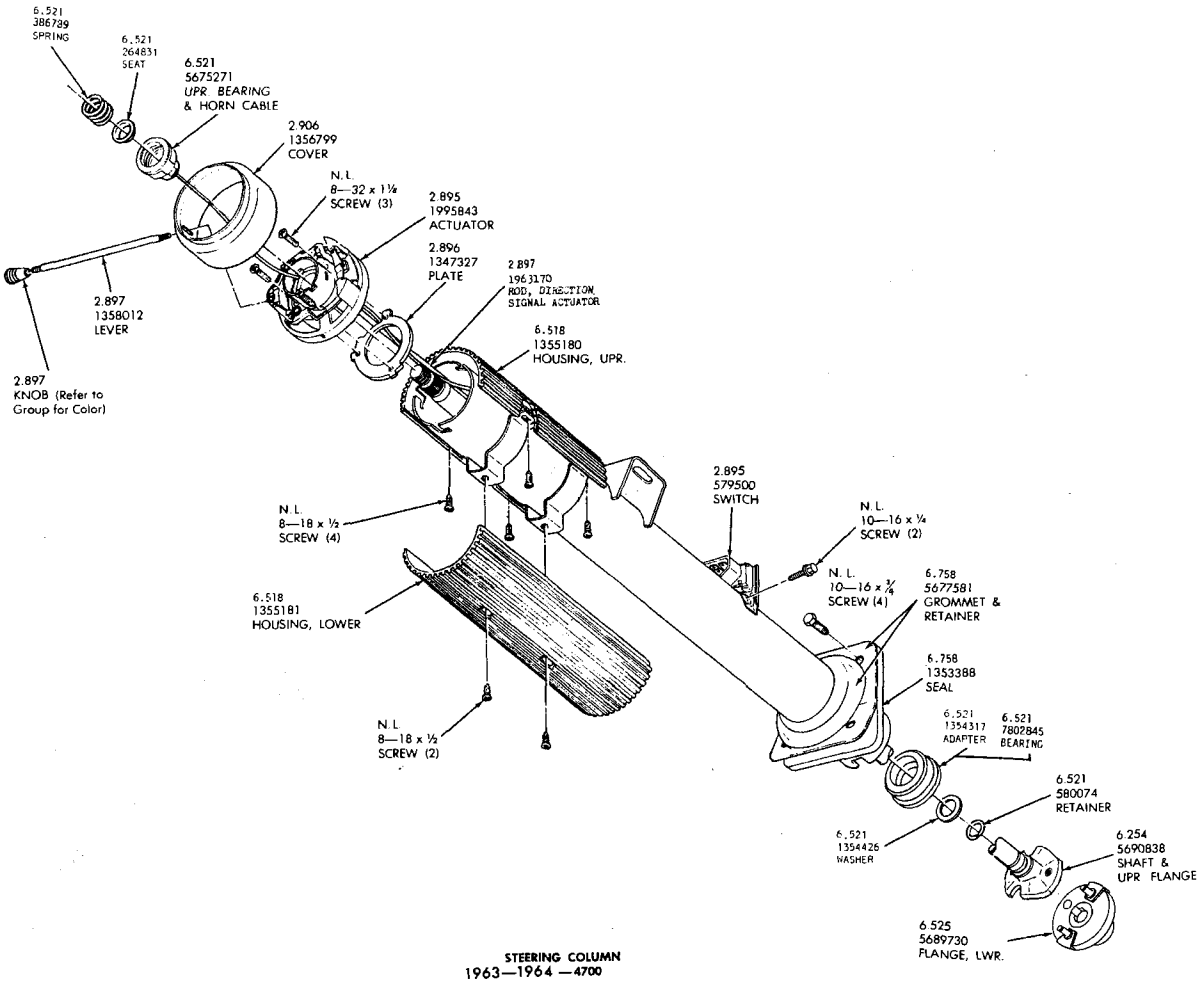

STEERING COLUMN
1963—1964 —4700

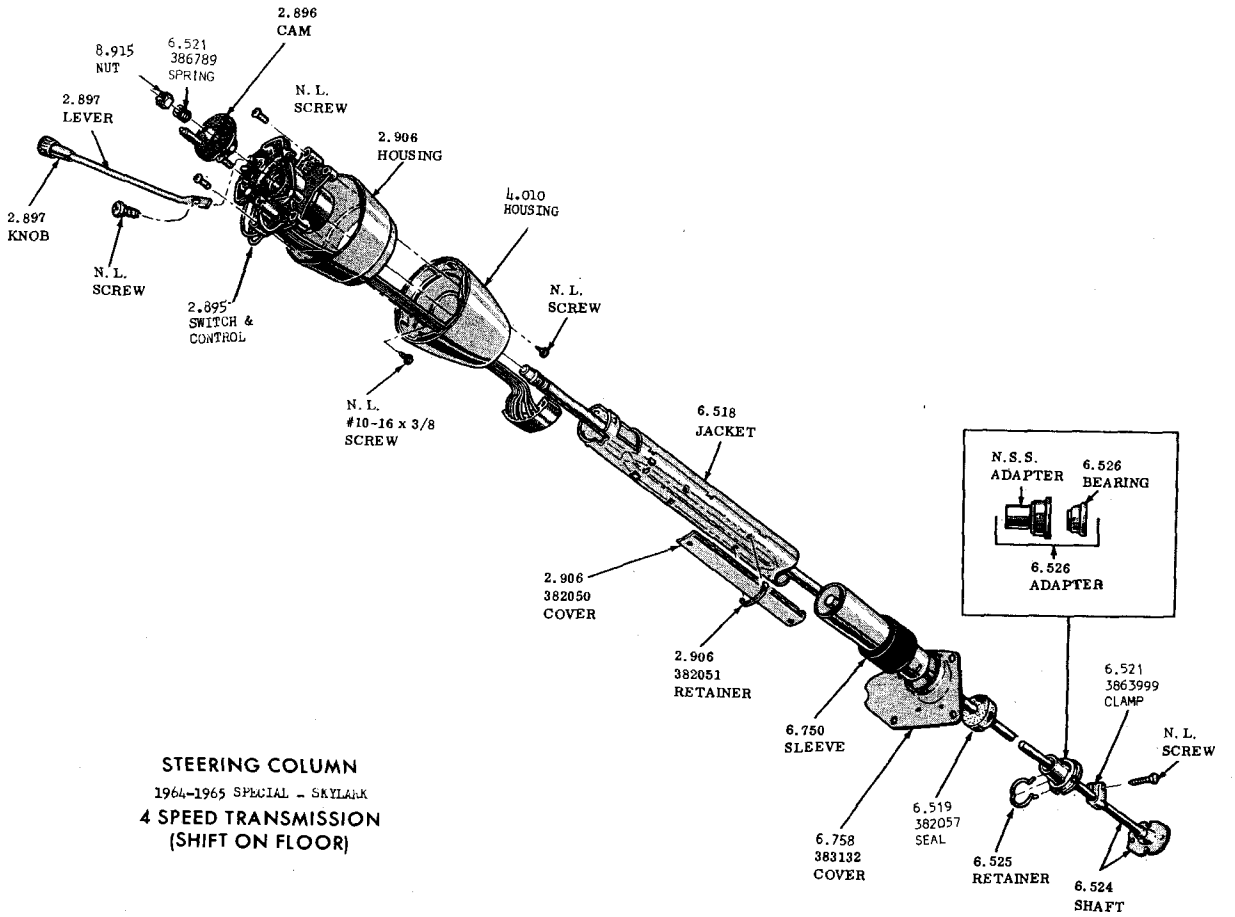

STEERING COLUMN

1964-1965 SPECIAL - SKYLARK

4 SPEED TRANSMISSION
(SHIFT ON FLOOR)

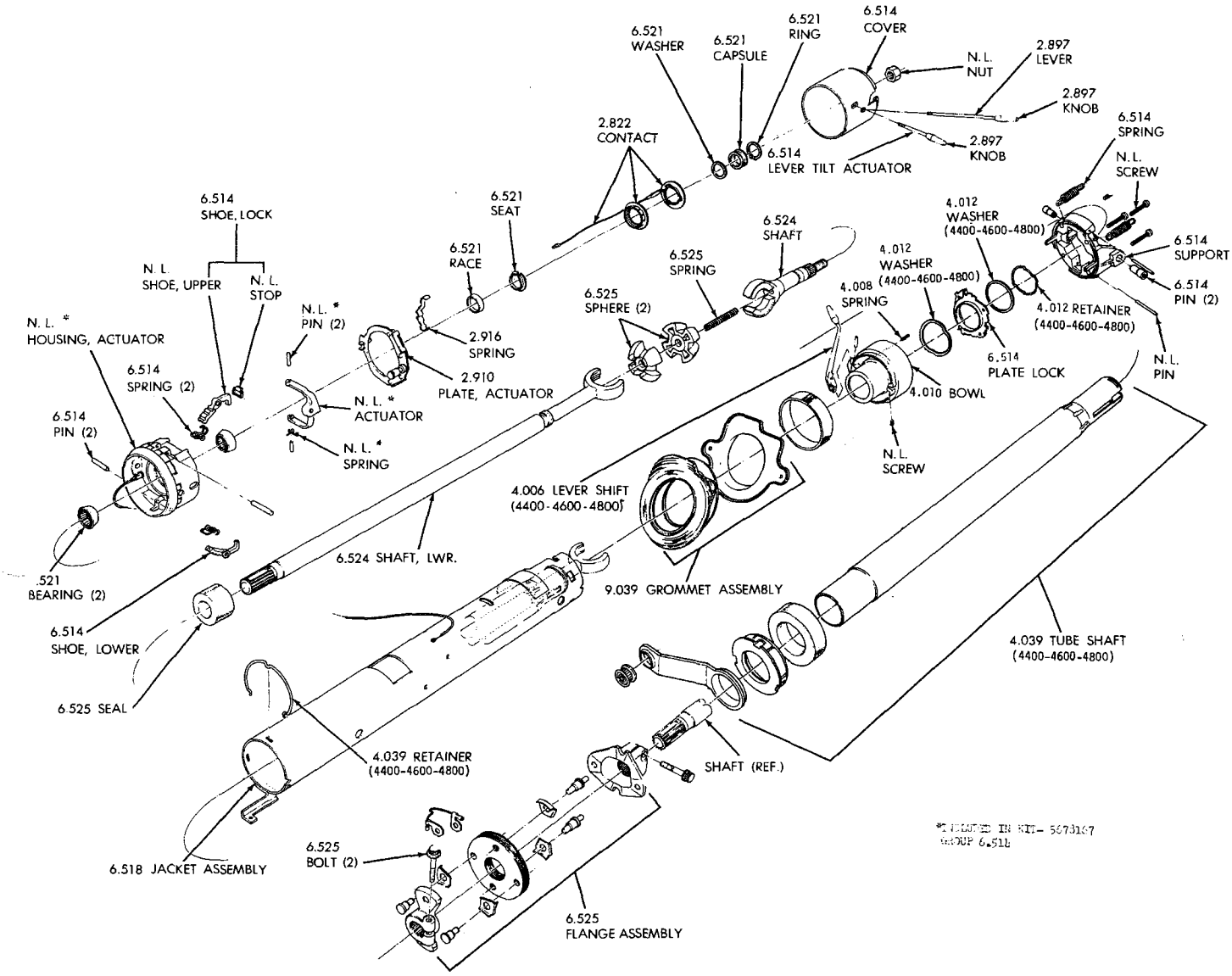

TYPICAL
TILT TYPE STEERING COLUMN
1963—4400-4600-4700-4800
1964—ALL

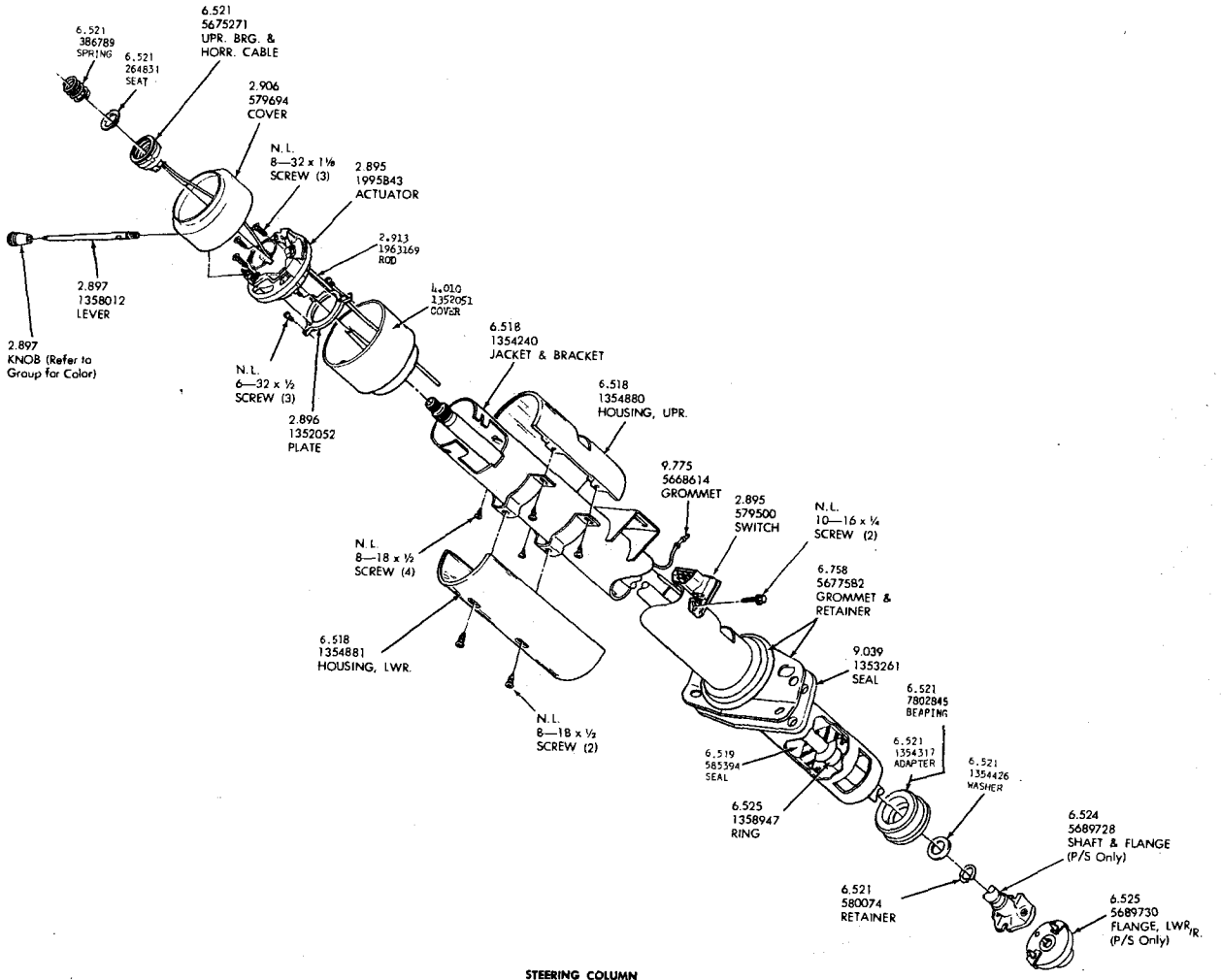

STEERING COLUMN
1963—1964—4639-4647-4667
(WILDCAT)

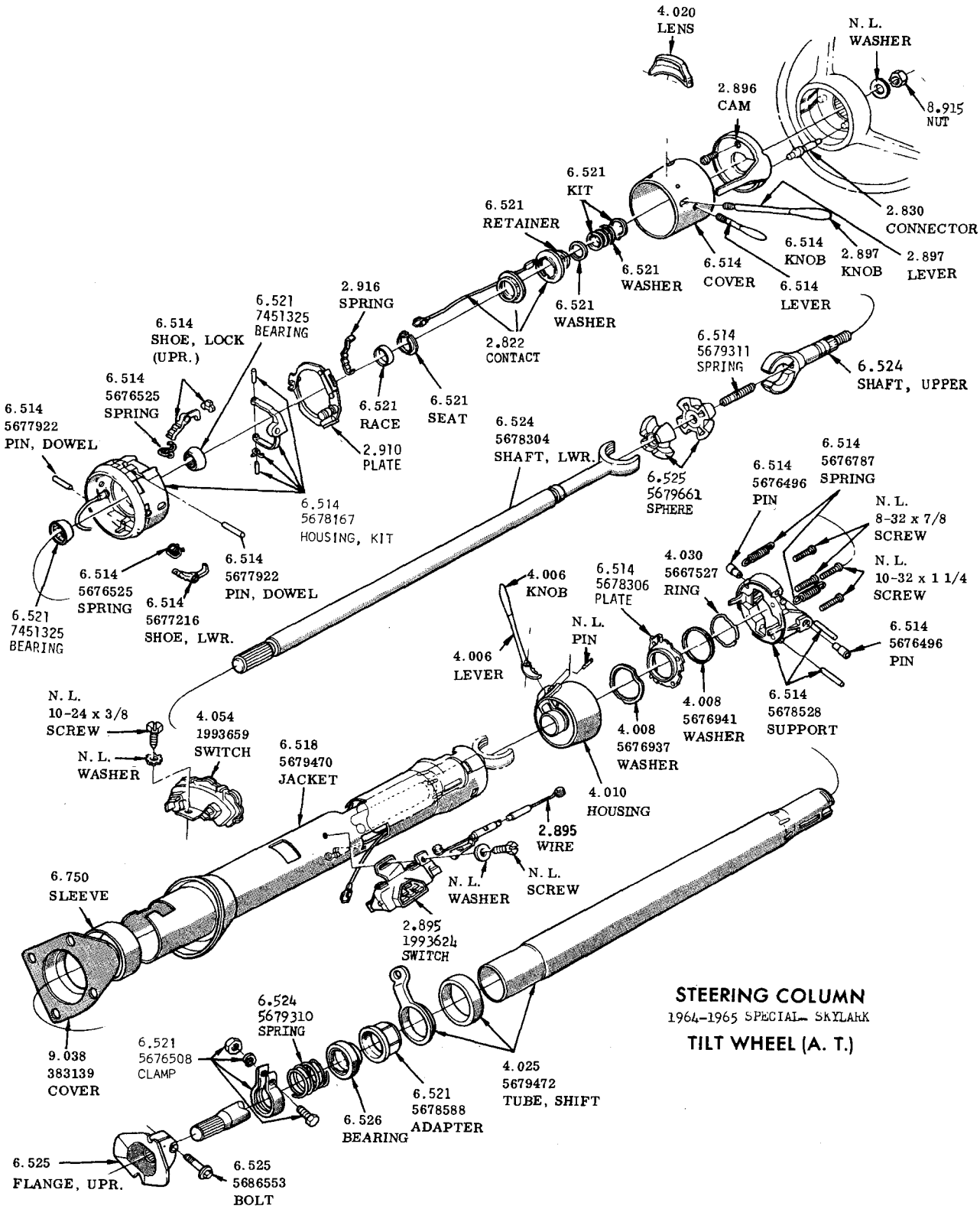
4.020
LENS
N. L.
WASHER
2.896
CAM
8.915
NUT
6.521
KIT
6.521
RETAINER
2.830
CONNECTOR
6.514
KNOB
2.897
KNOB
2.897
LEVER
6.521
WASHER
6.514
COVER
6.514
LEVER
6.521
WASHER
2.916
SPRING
6.521
7451325
BEARING
6.514
SHOE, LOCK
(UPR.)
2.822
CONTACT
6.514
5679311
SPRING
6.524
SHAFT, UPPER
6.514
5676525
SPRING
6.521
RACE
6.521
SEAT
6.514
5677922
PIN, DOWEL
2.910
PLATE
6.524
5678304
SHAFT, LWR.
6.525
5679661
SPHERE
6.514
5676787
SPRING
6.514
5676496
PIN
N. L.
8-32 x 7/8
SCREW
6.514
5678167
HOUSING, KIT
4.030
5667527
RING
N. L.
10-32 x 1 1/4
SCREW
6.514
5676525
SPRING
6.514
5677922
PIN, DOWEL
4.006
KNOB
6.514
5678306
PLATE
6.521
7451325
BEARING
6.514
5677216
SHOE, LWR.
N. L.
PIN
6.514
5676496
PIN
4.006
LEVER
N. L.
10-24 x 3/8
SCREW
4.054
1993659
SWITCH
4.008
5676941
WASHER
6.514
5678528
SUPPORT
4.008
5676937
WASHER
N. L.
WASHER
6.518
5679470
JACKET
4.010
HOUSING
2.895
WIRE
6.750
SLEEVE
N. L.
WASHER
N. L.
SCREW
2.895
1993624
SWITCH
STEERING COLUMN
1964-1965 SPECIAL- SKYLARK
TILT WHEEL (A. T.)
6.524
5679310
SPRING
6.521
5676508
CLAMP
9.038
383139
COVER
4.025
5679472
TUBE, SHIFT
6.521
5678588
ADAPTER
6.526
BEARING
6.525
FLANGE, UPR.
6.525
5686553
BOLT

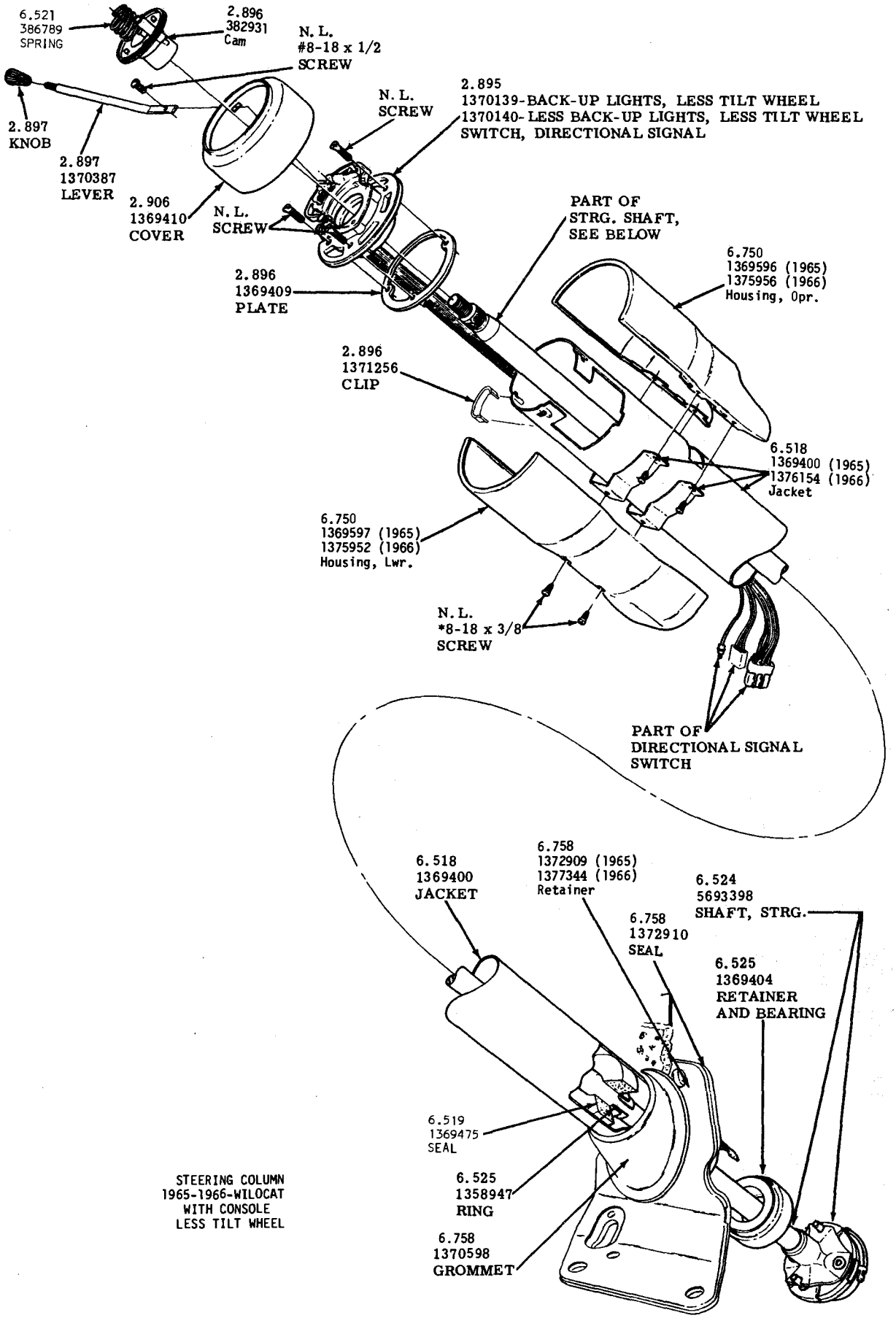

STEERING COLUMN
1965-1966-WILDCAT
WITH CONSOLE
LESS TILT WHEEL

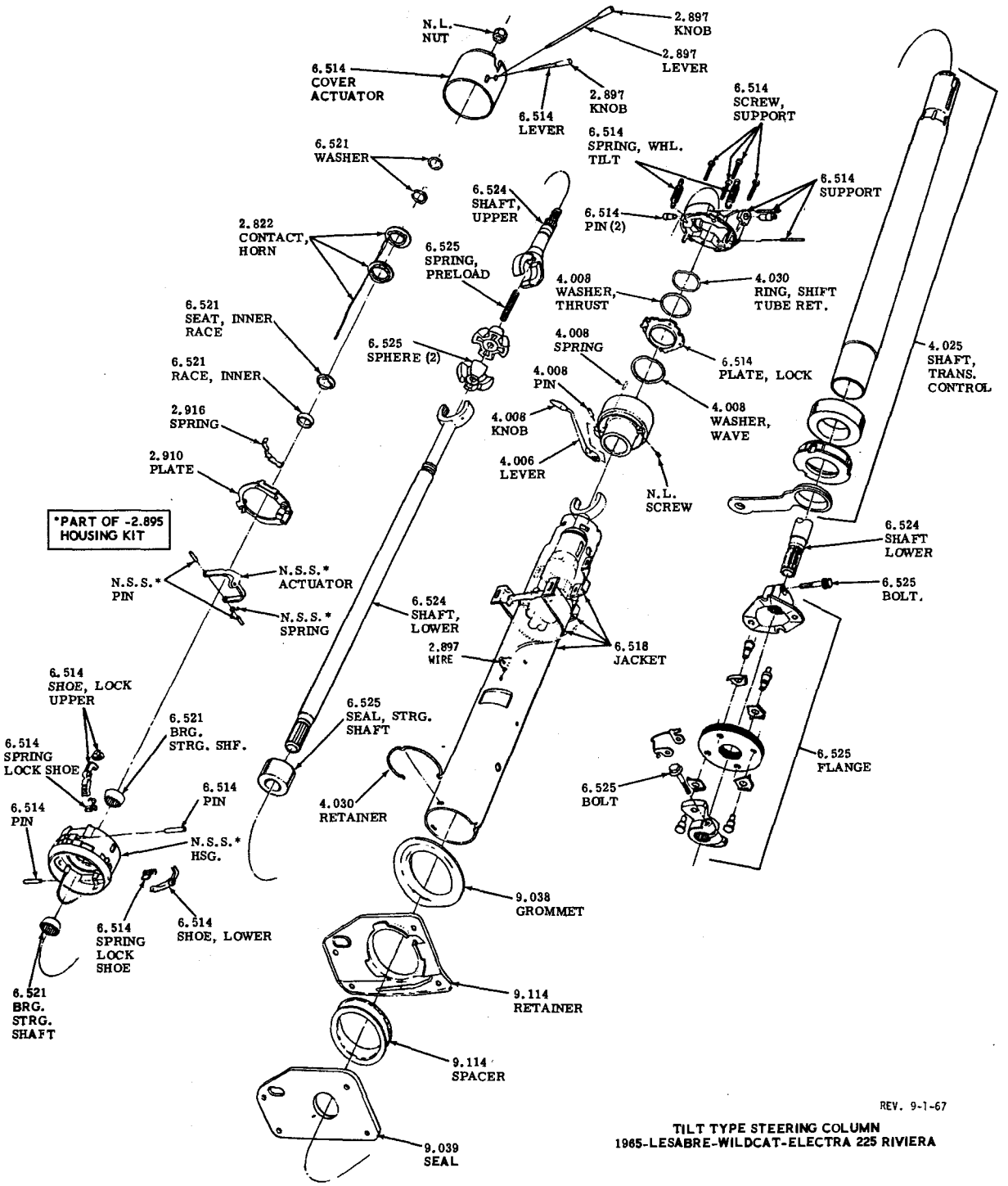

STEERING COLUMN
1965 50-60-80-9000 TILT

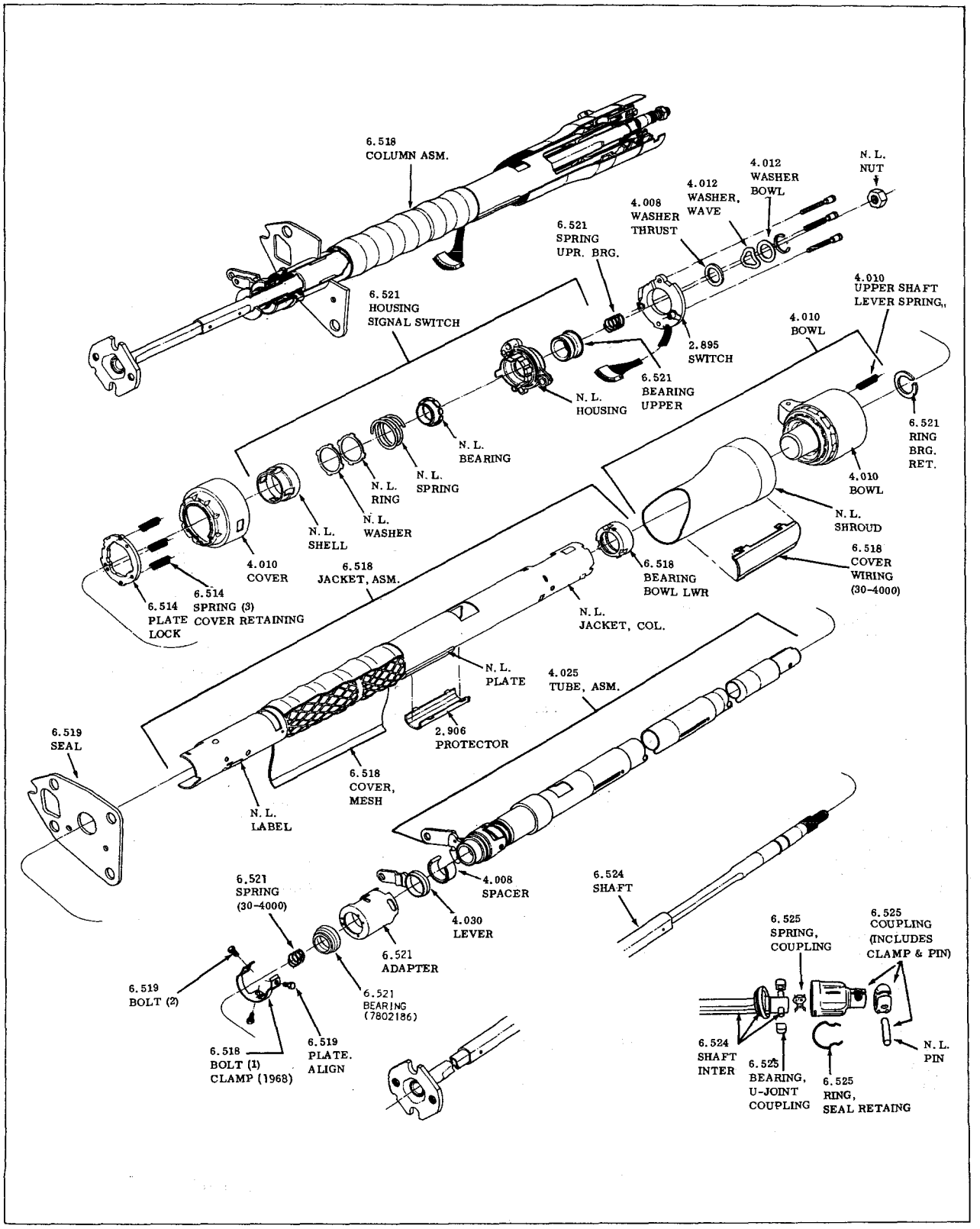

TYPICAL STEERING COLUMN
1967-1968 - C.T. ALL

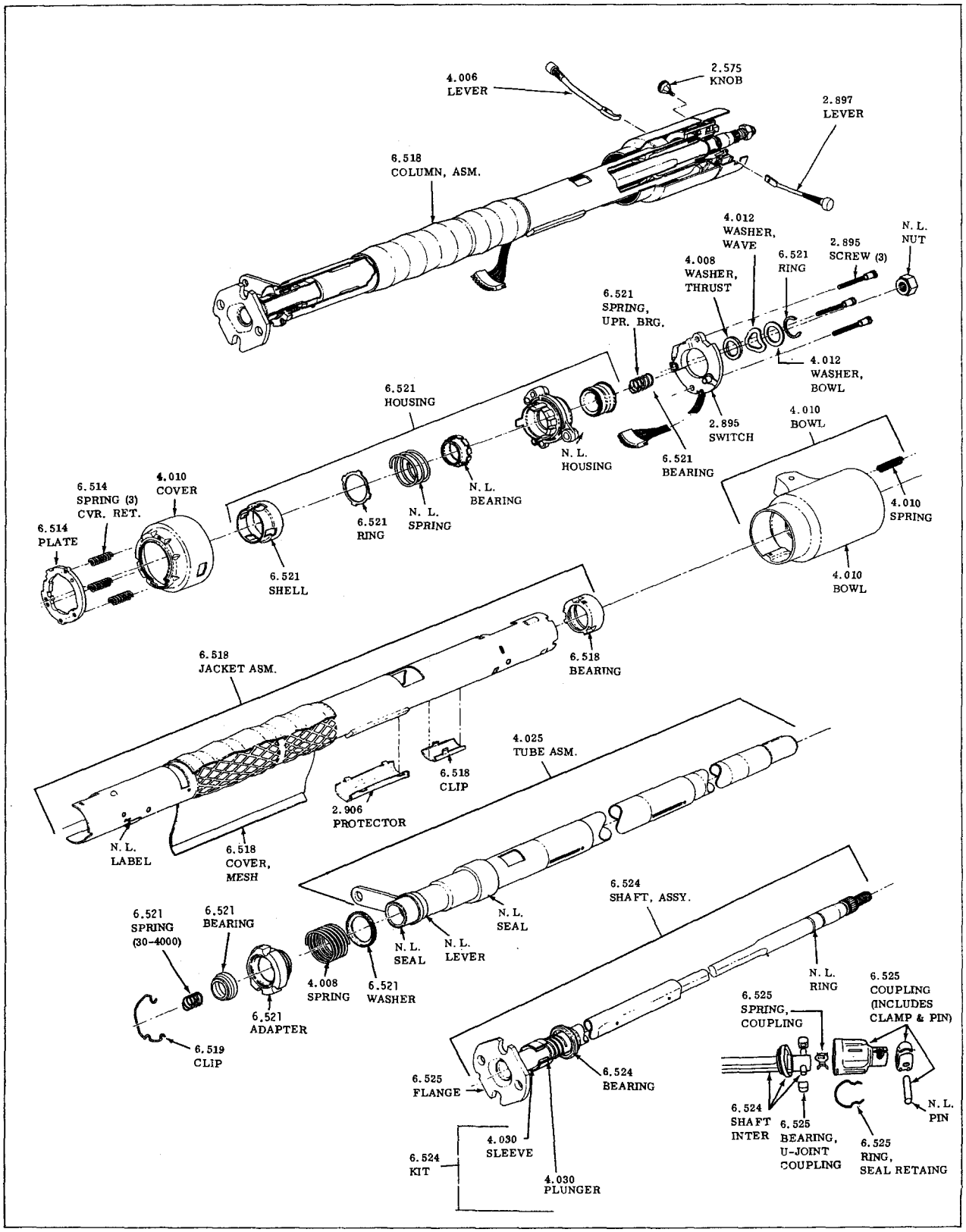

TYPICAL STEERING COLUMN
1967-1968 ALL (NON-TILT) A.T.

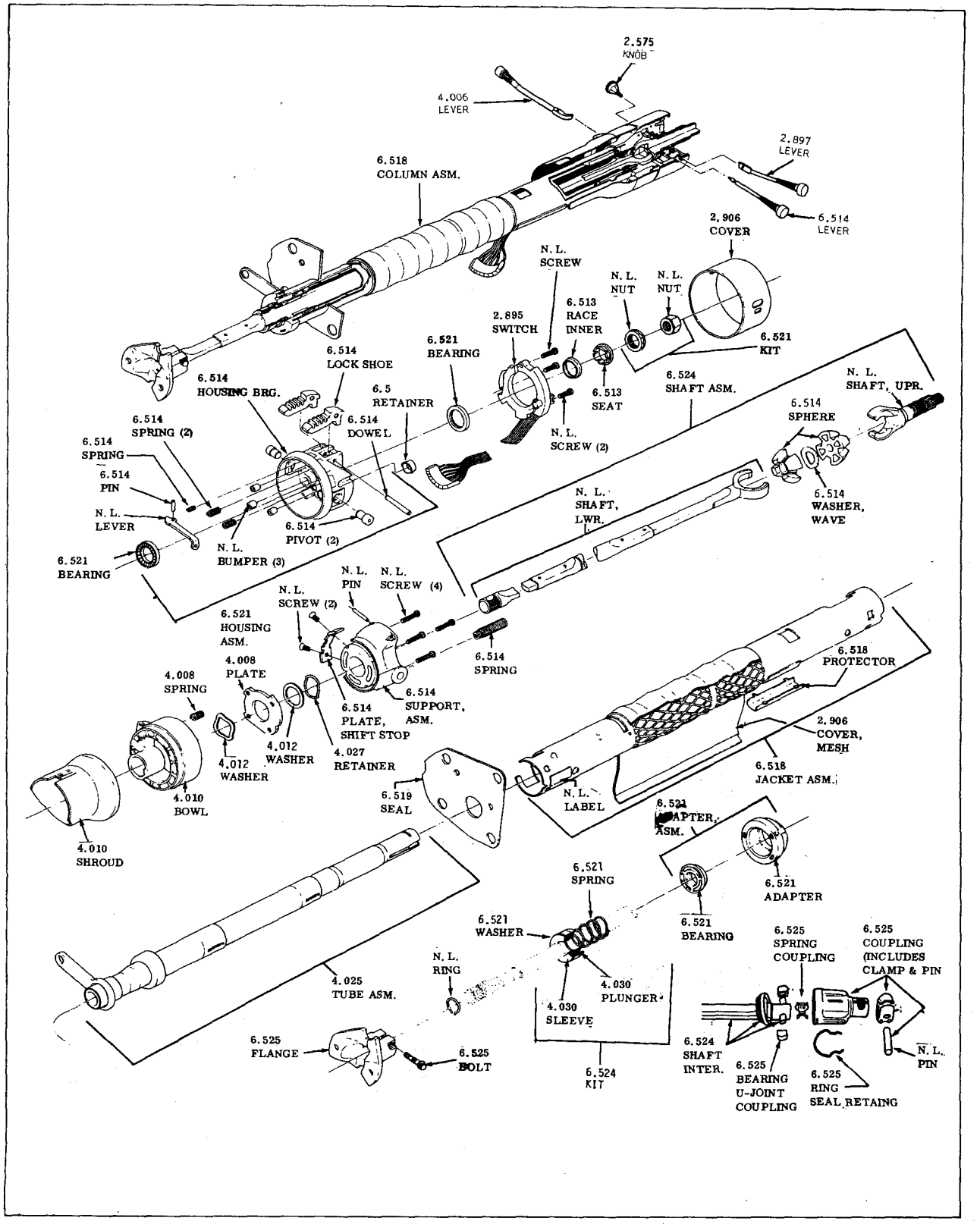

TYPICAL STEERING COLUMN
1967-1968 ALL (TILT TYPE)

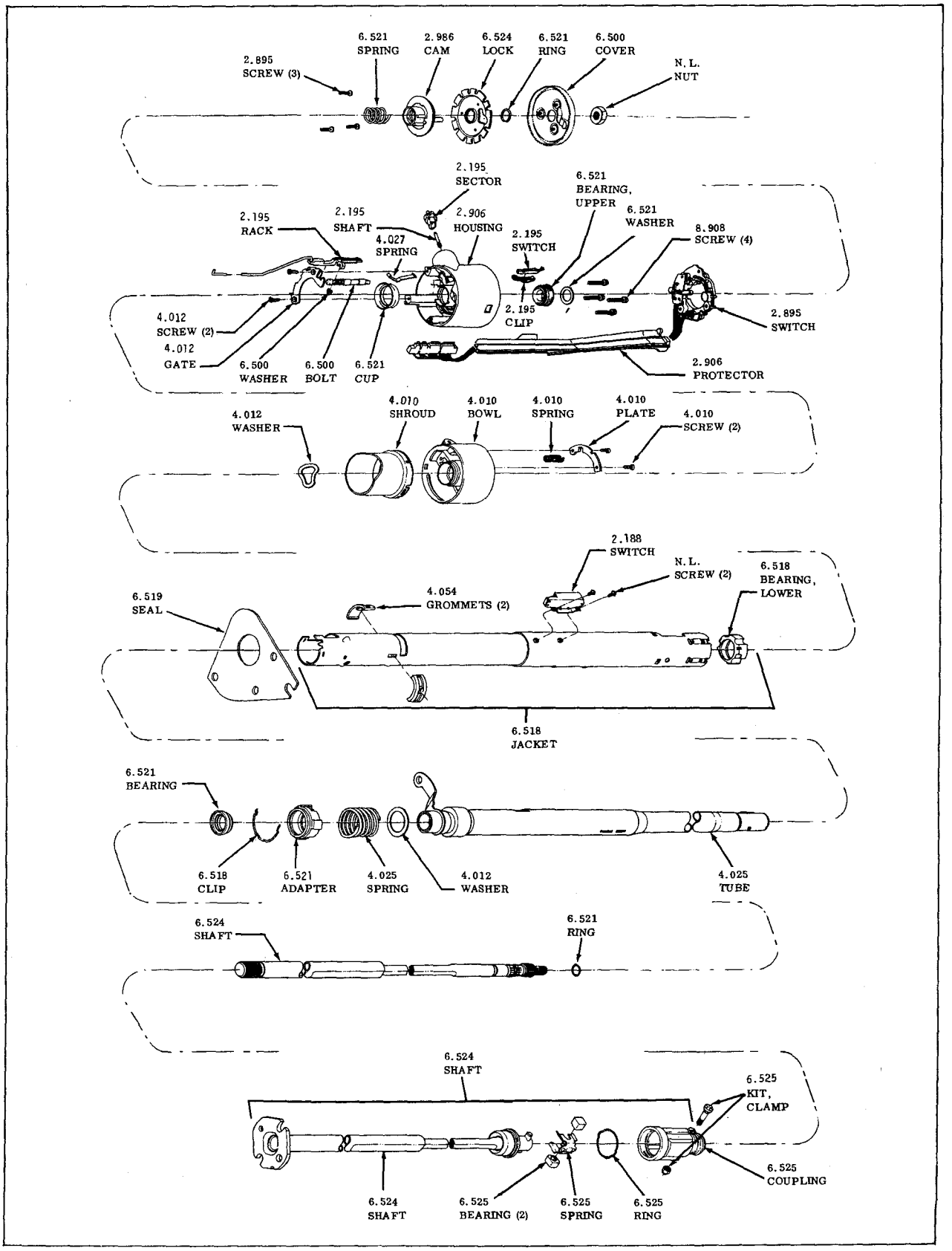

TYPICAL STEERING COLUMN
1969-30-4000 A. T. COL. SHIFT
(NON-TILT)

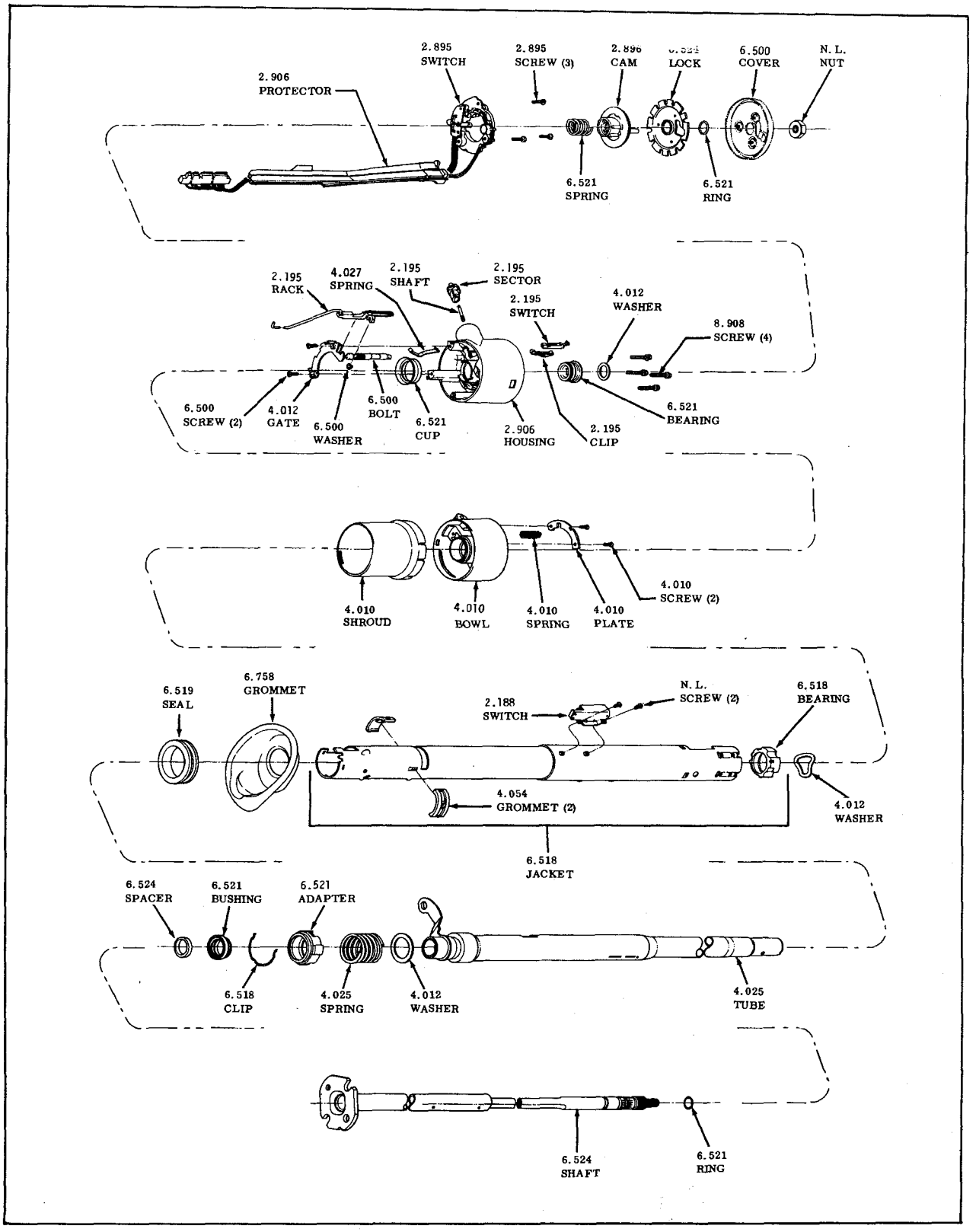

TYPICAL STEERING COLUMN
1969 50-60-80-9000 A. T. COL. SHIFT (NON-TILT)

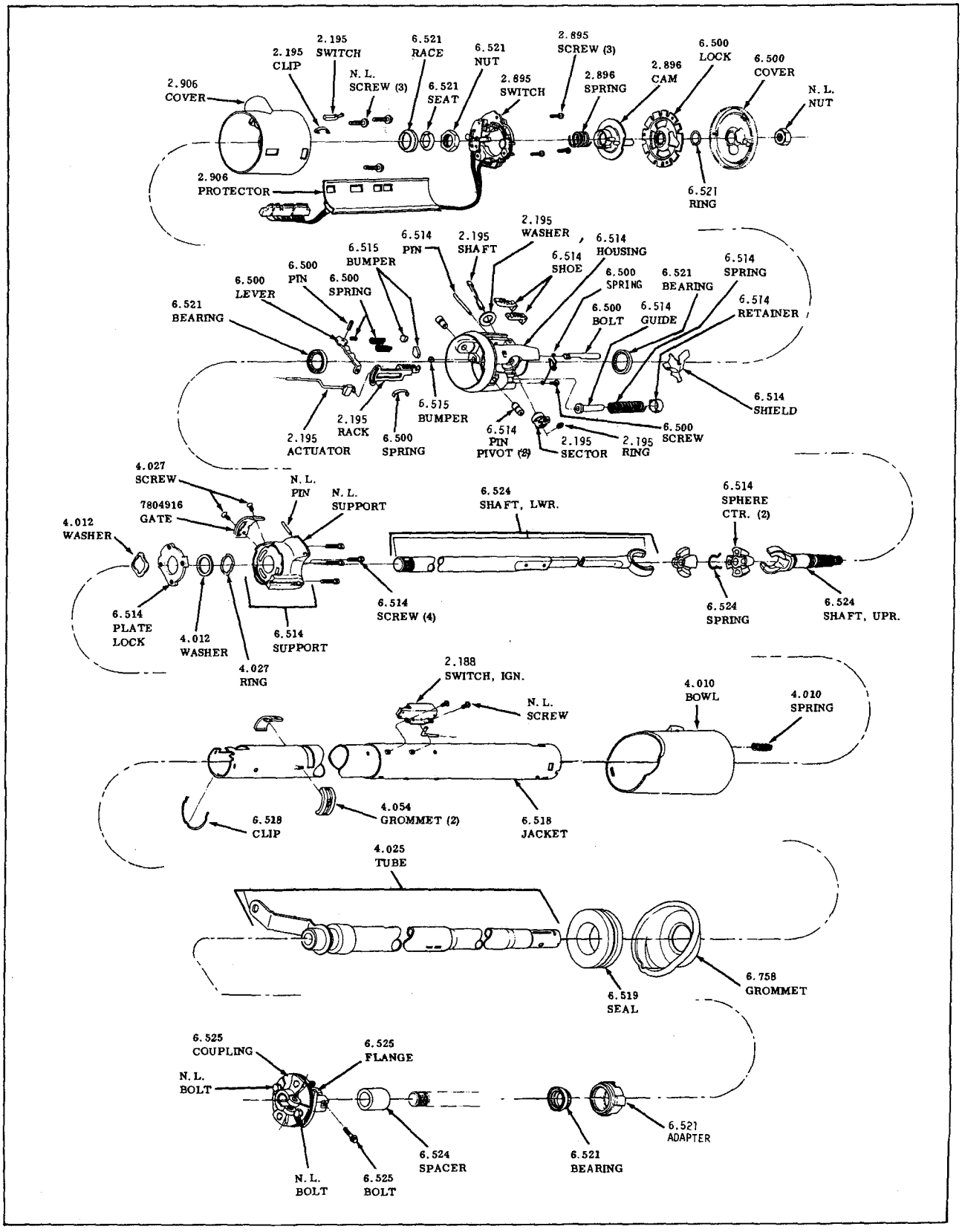

TYPICAL STEERING COLUMN
1969-ALL TILT TYPE

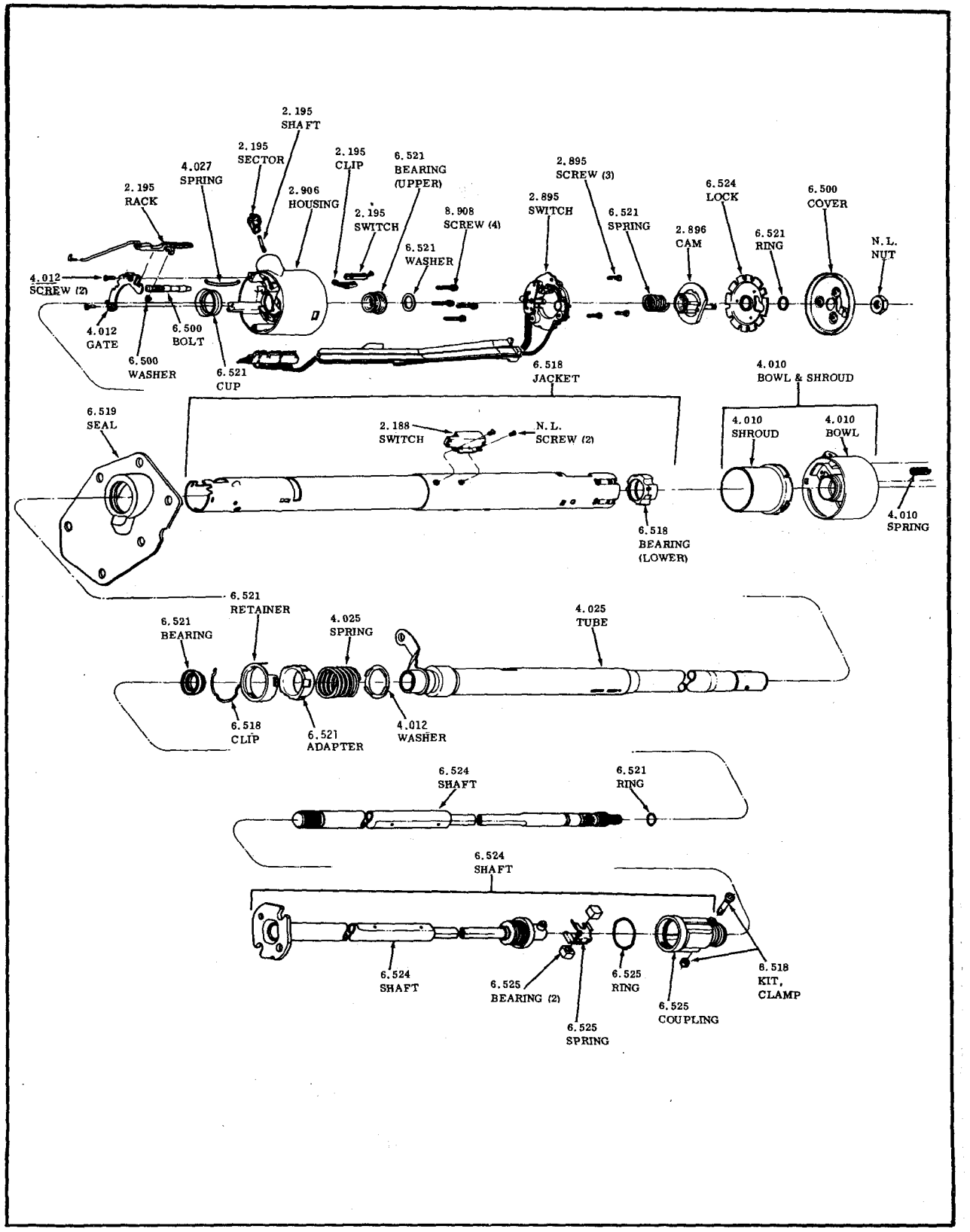

TYPICAL STEERING COLUMN
1971-1972 ALL (NON TILT)

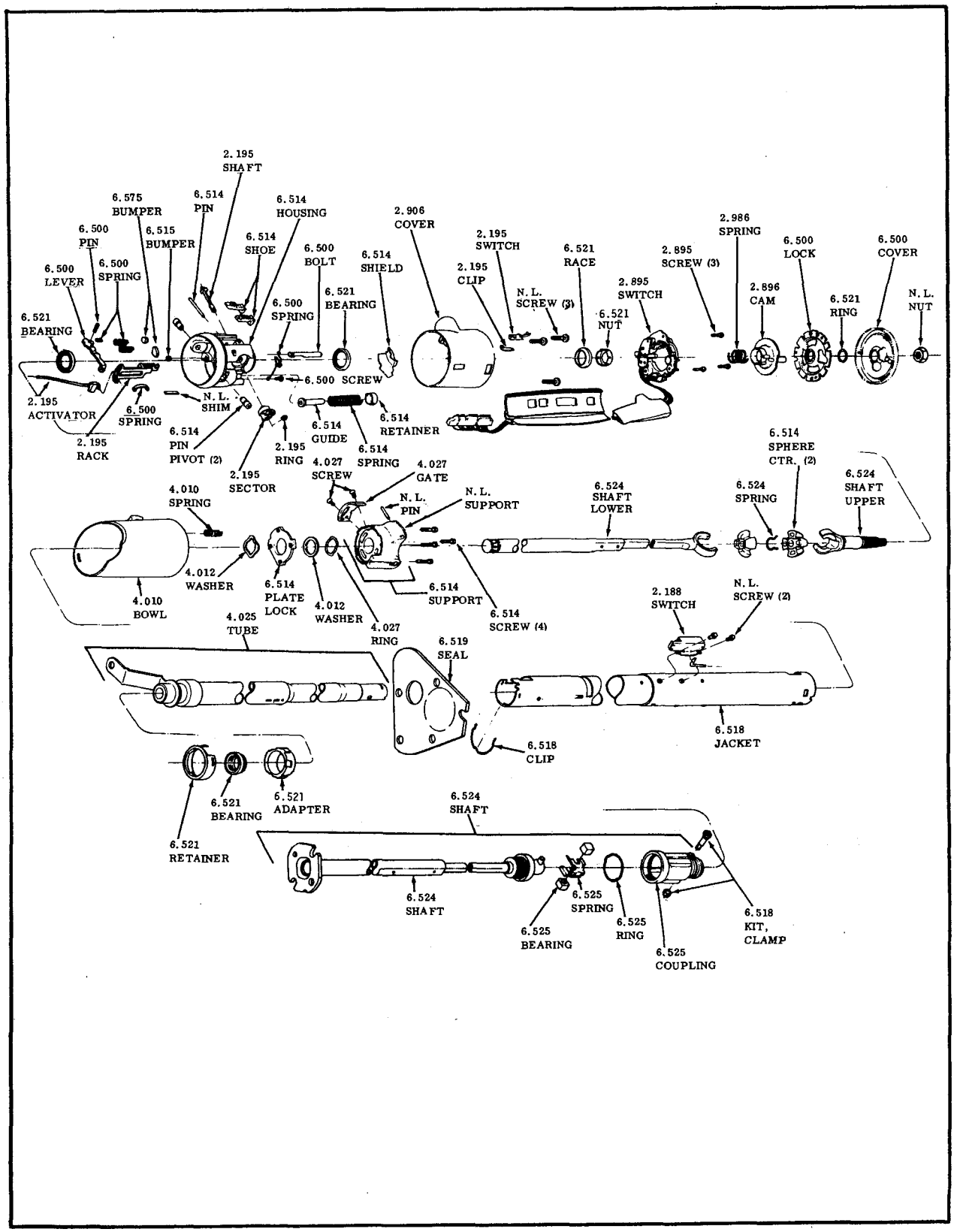

TYPICAL STEERING COLUMN

1971-1972 ALL (TILT)

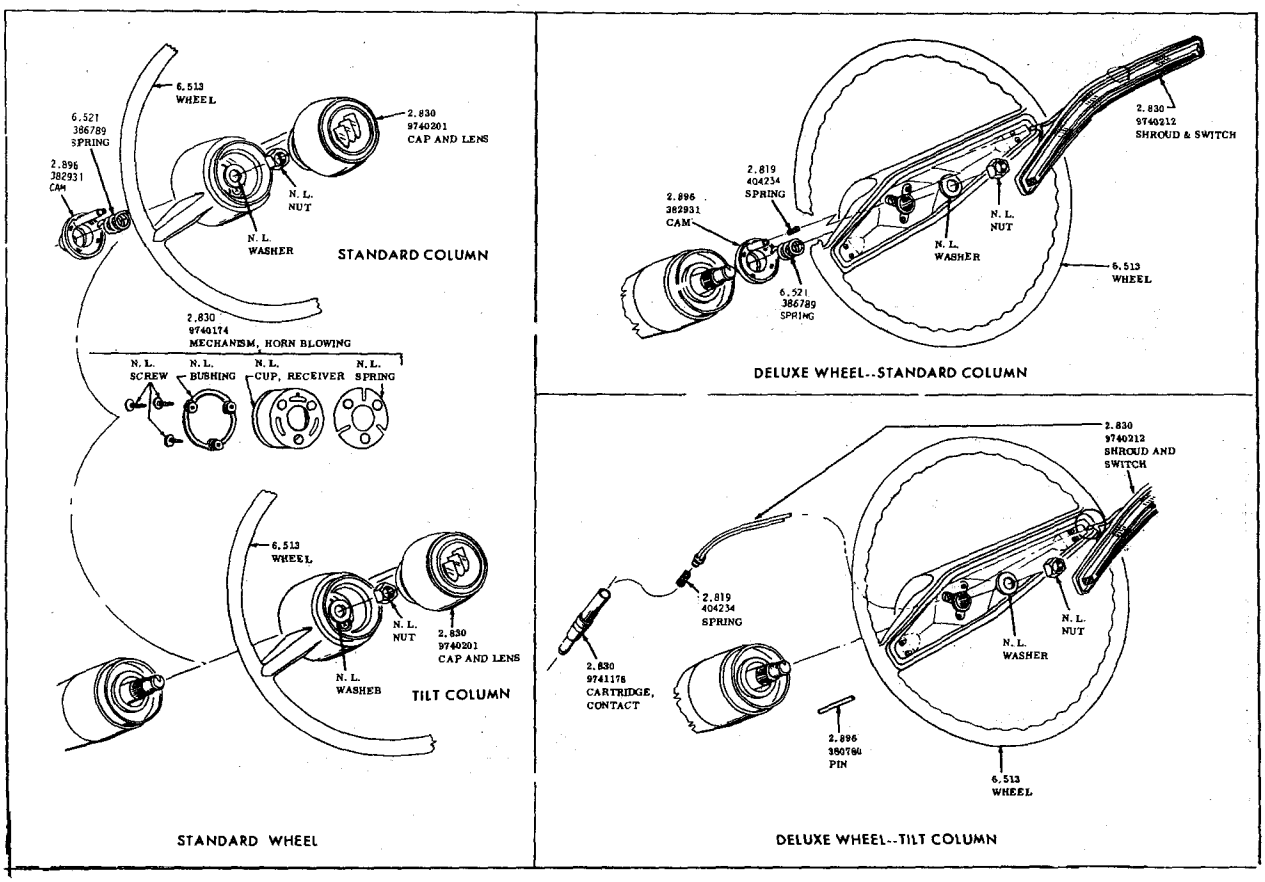

STEERING WHEELS
1964-1965-SPECIAL-SKYLARK

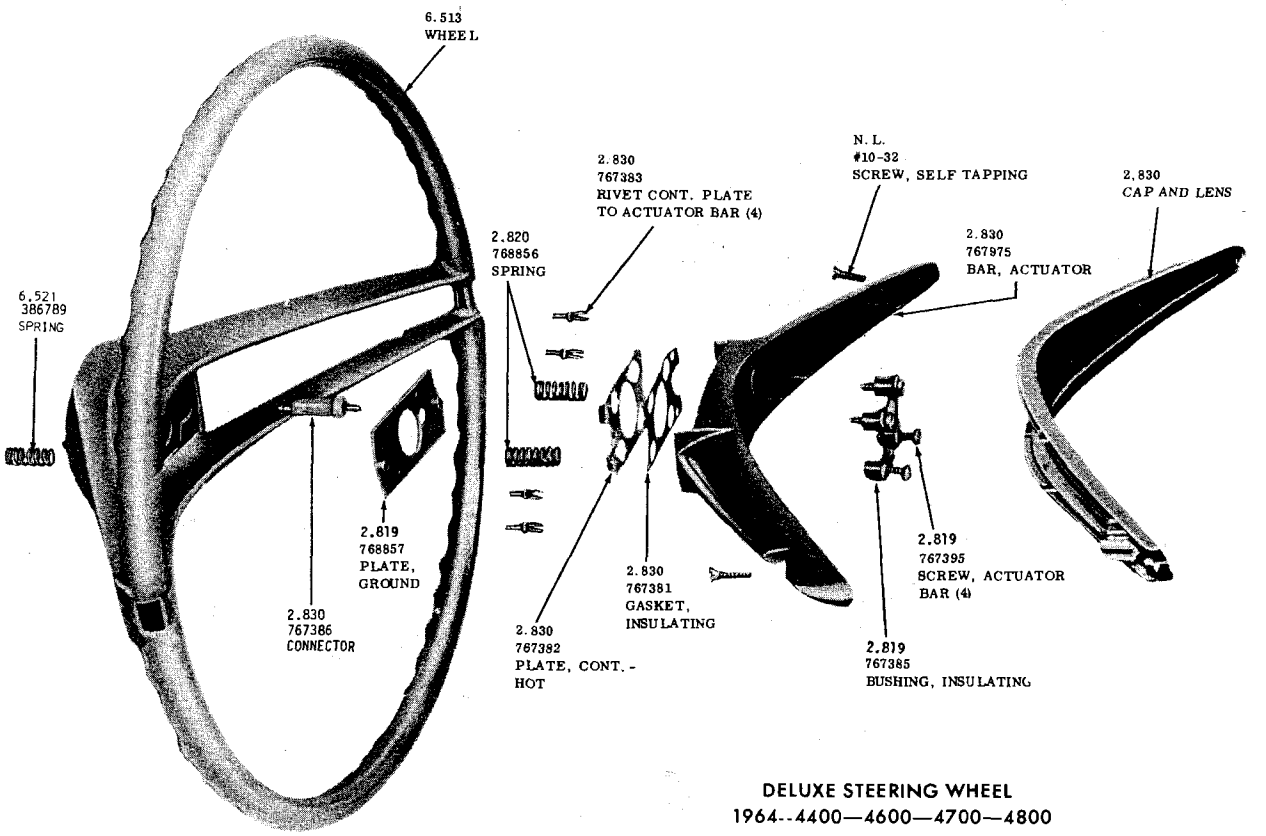

DELUXE STEERING WHEEL
1964--4400—4600—4700—4800

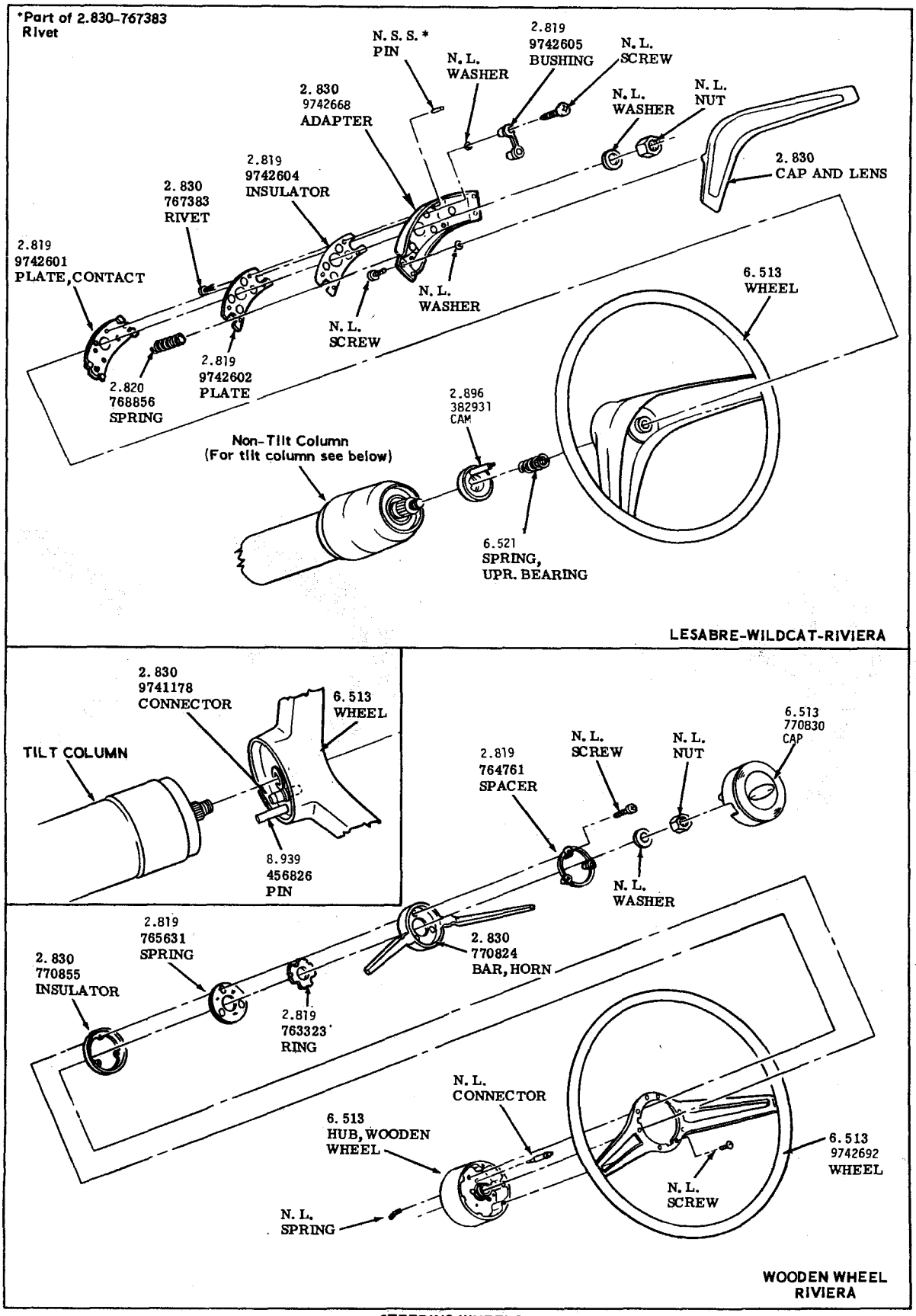

STEERING WHEELS
1965-LESABRE-WILDCAT-ELECTRA 225

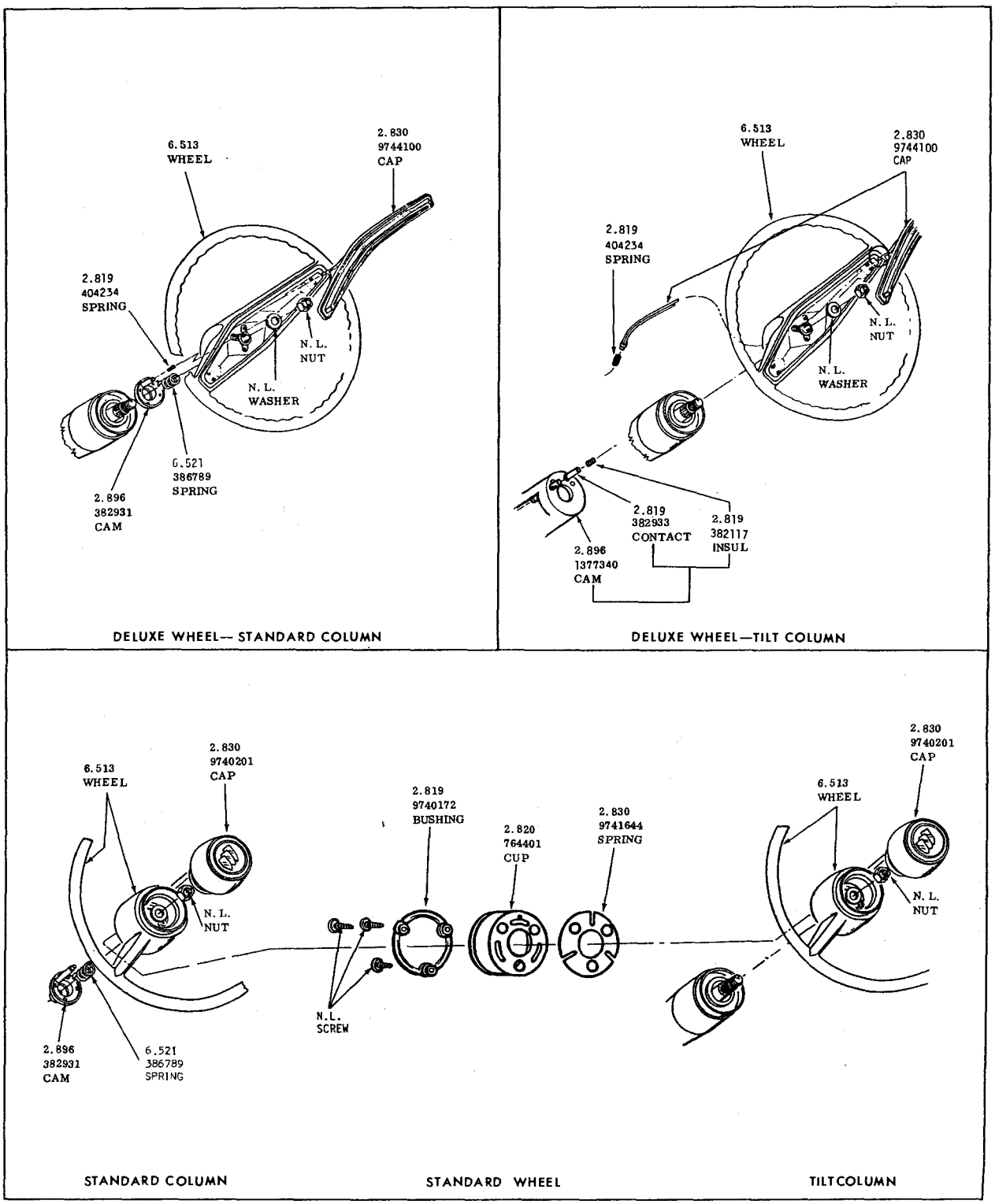

STEERING WHEELS
1966—SPECIAL—SKYLARK—SKYLARK GRANSPORT

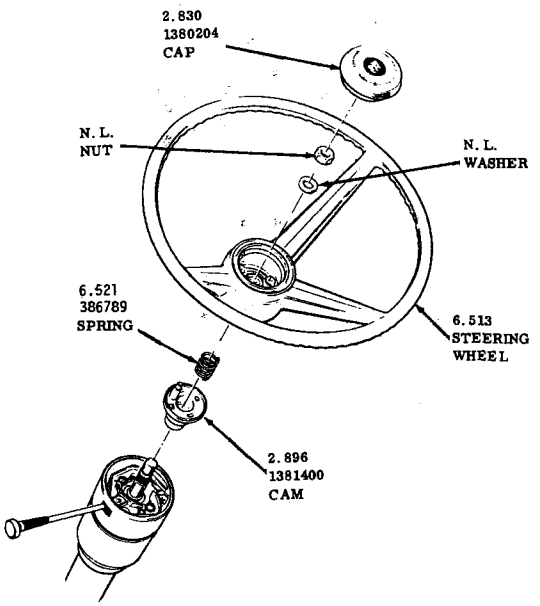

STANDARD COLUMN
33-3400

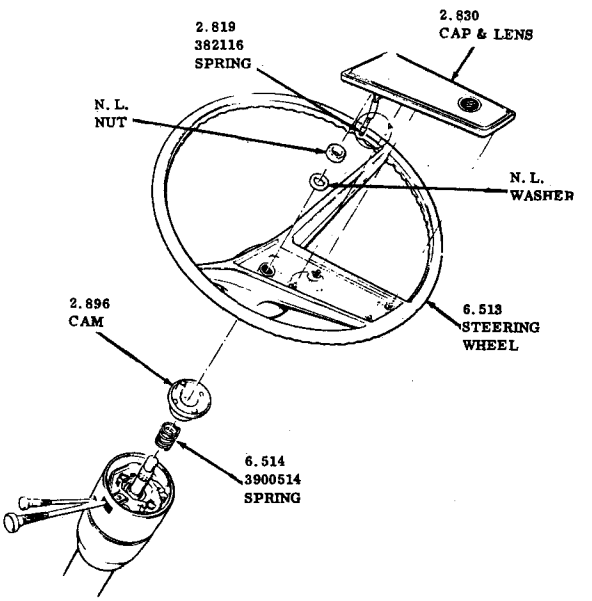

TILT COLUMN
35-36-4000

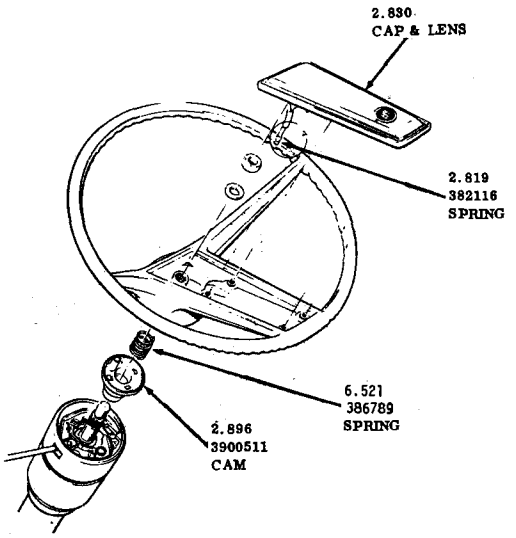

STANDARD COLUMN
52-54-6400

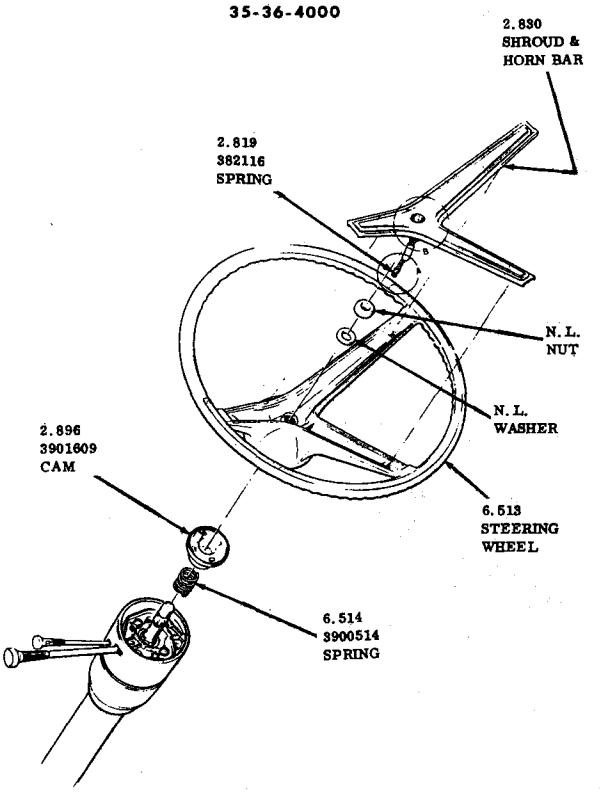

TILT COLUMN
66-80-9000

STEERING WHEEL INSTALATION
1967-ALL

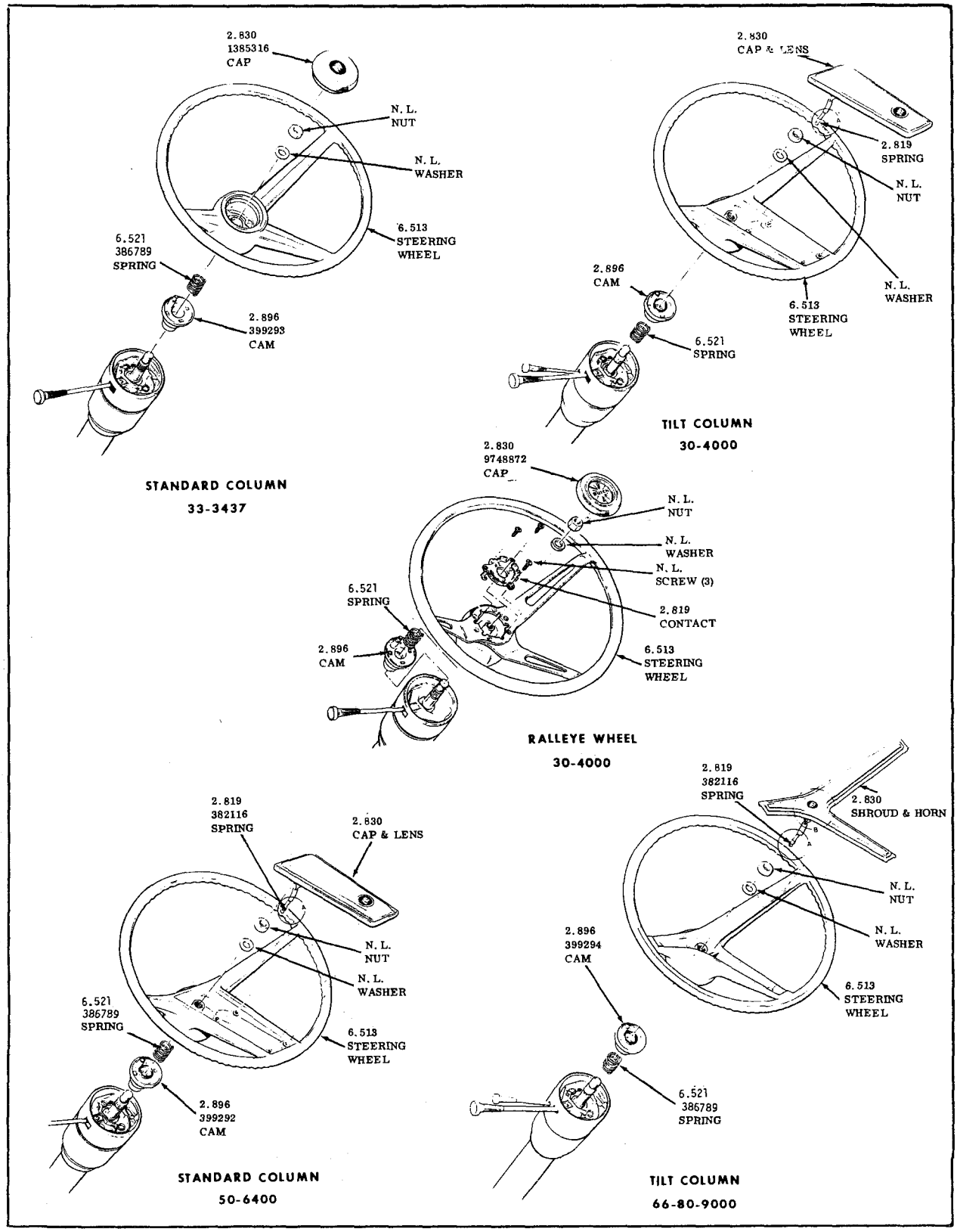

STEERING WHEEL INSTALLATION

1968-ALL

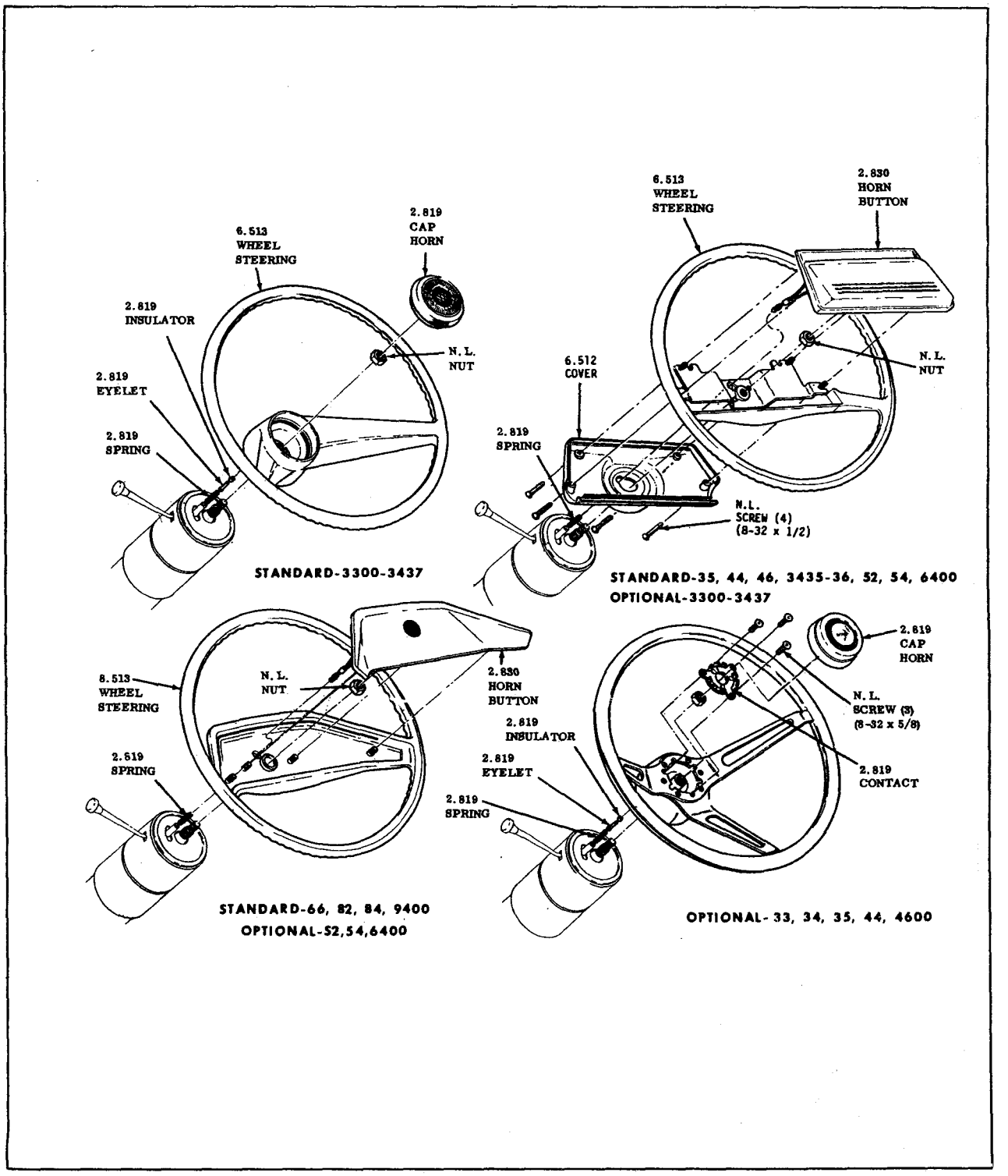

STEERING WHEEL INSTALLATION
1969-ALL

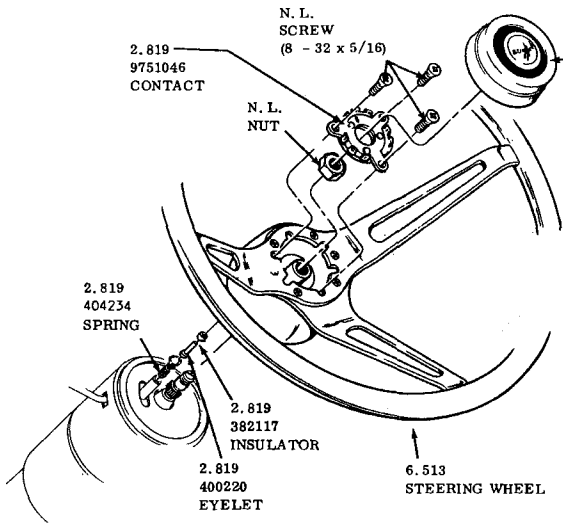

OPTIONAL-33, 34, 35 & 44

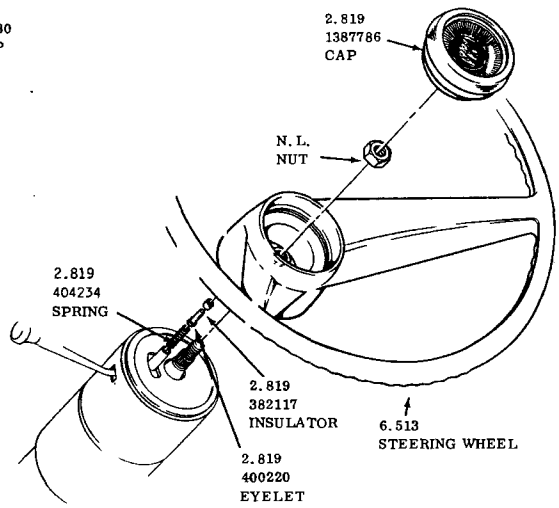

STANDARD -33, & 3437

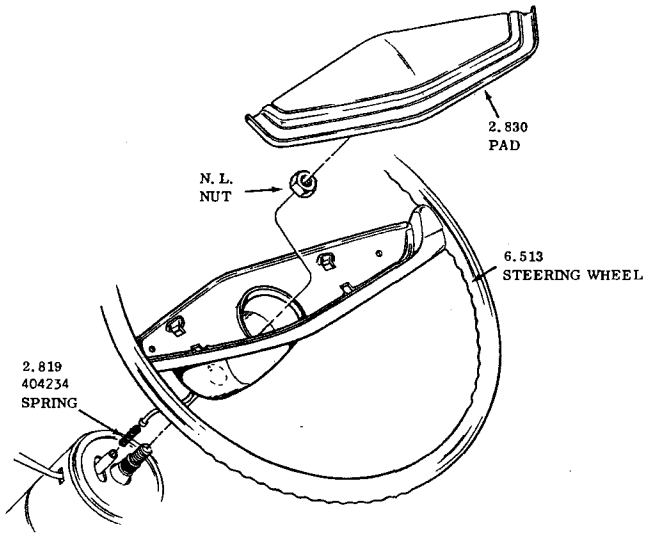

OPTIONAL-ALL SERIES

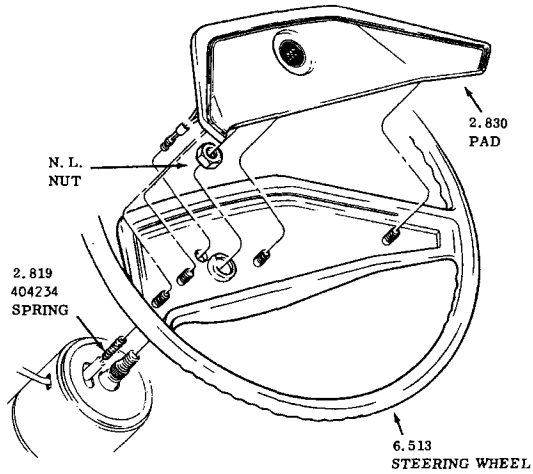

STANDARD-66, 82, 84 & 94

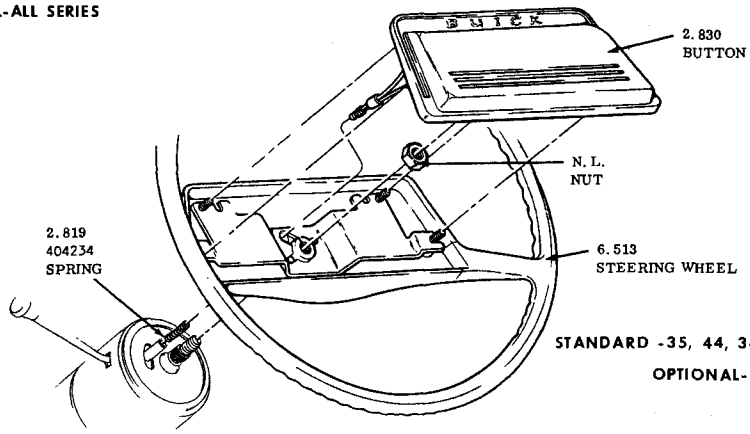

STANDARD -35, 44, 3435-36, 52, 54, 60 & 64
OPTIONAL-33 & 3437

STEERING WHEEL INSTALLATION
1970-ALL

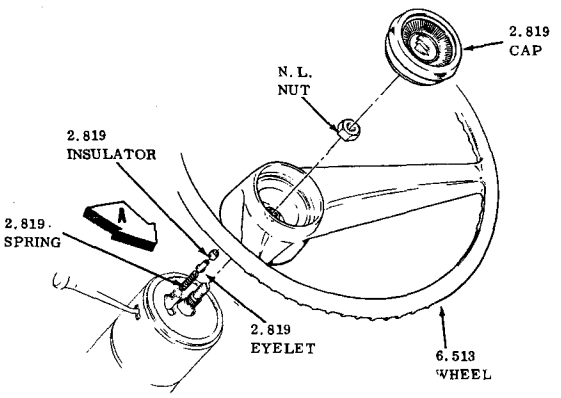

STANDARD (33-3437)

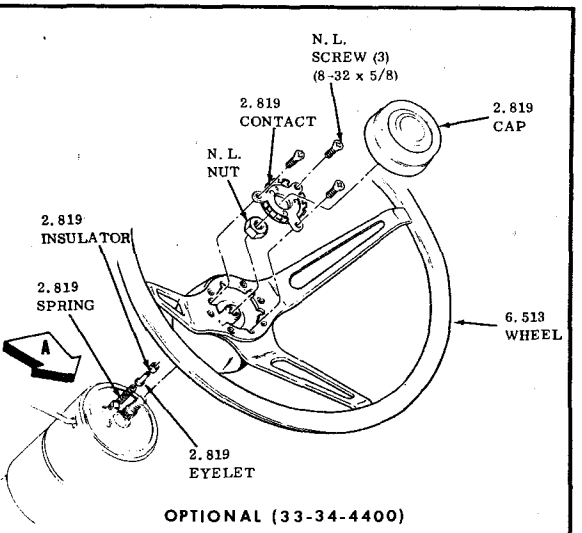

OPTIONAL (33-34-4400)

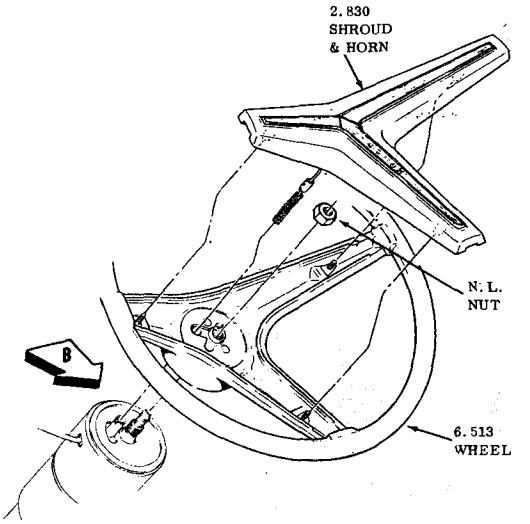

STANDARD (66-80-9000)
OPTIONAL (6035-45)

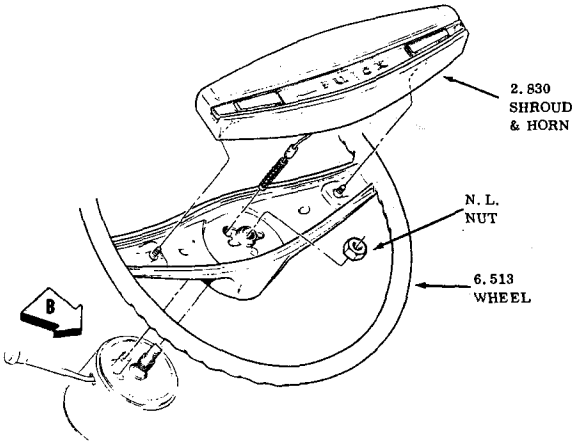

STANDARD (3436-67-44-50-6035-45)
OPTIONAL (3337-3437)

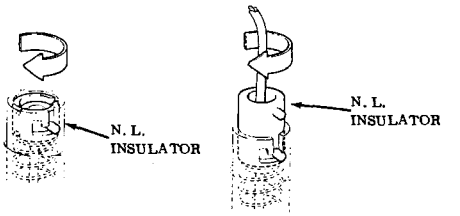

VIEW A

VIEW B

STEERING WHEEL INSTALLATION
1971 - 1972 ALL

GROUP 7

FRAME

SHOCK ABSORBERS

SPRINGS

BUMPERS

MEMORANDA

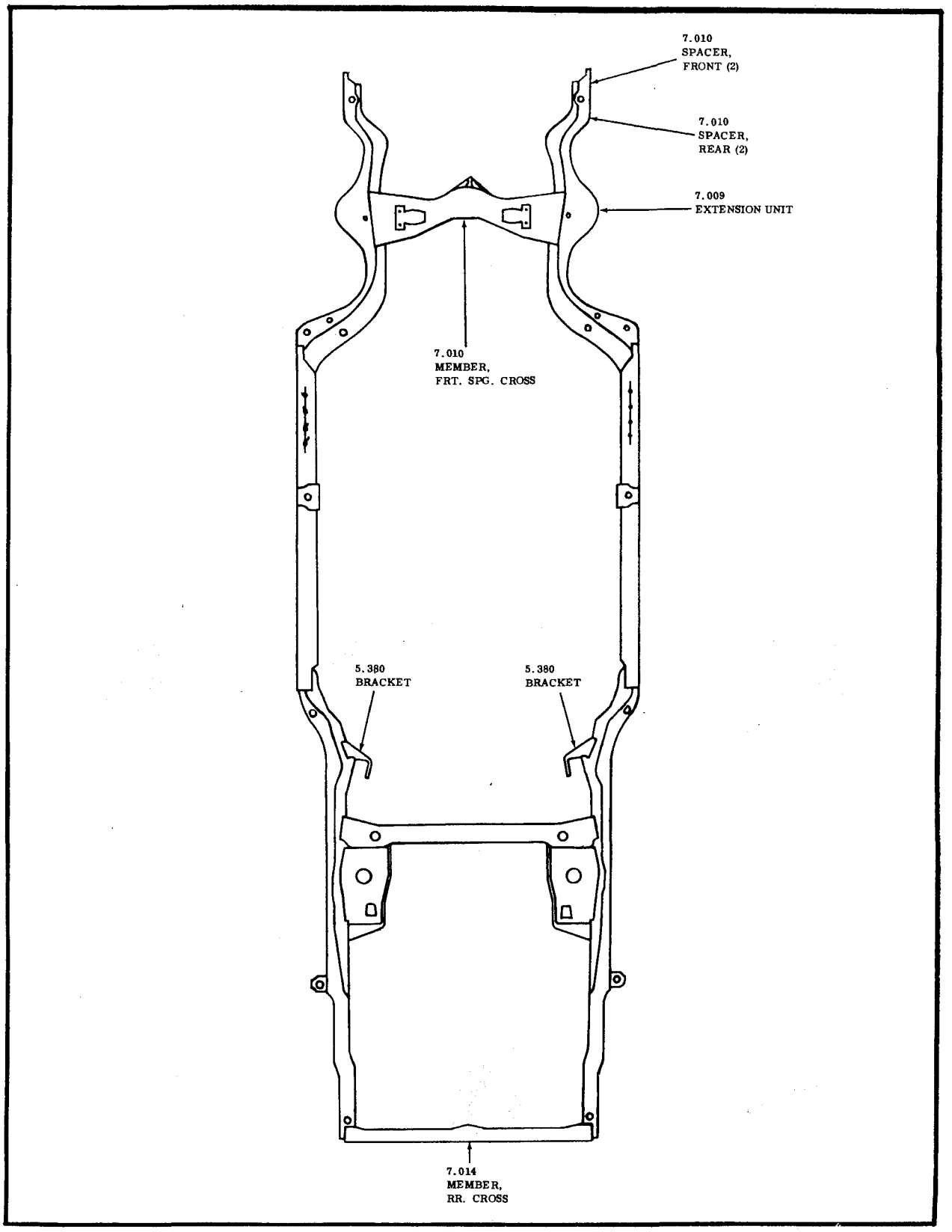

(YPICAL)

FRAME

1966-72-30-4000

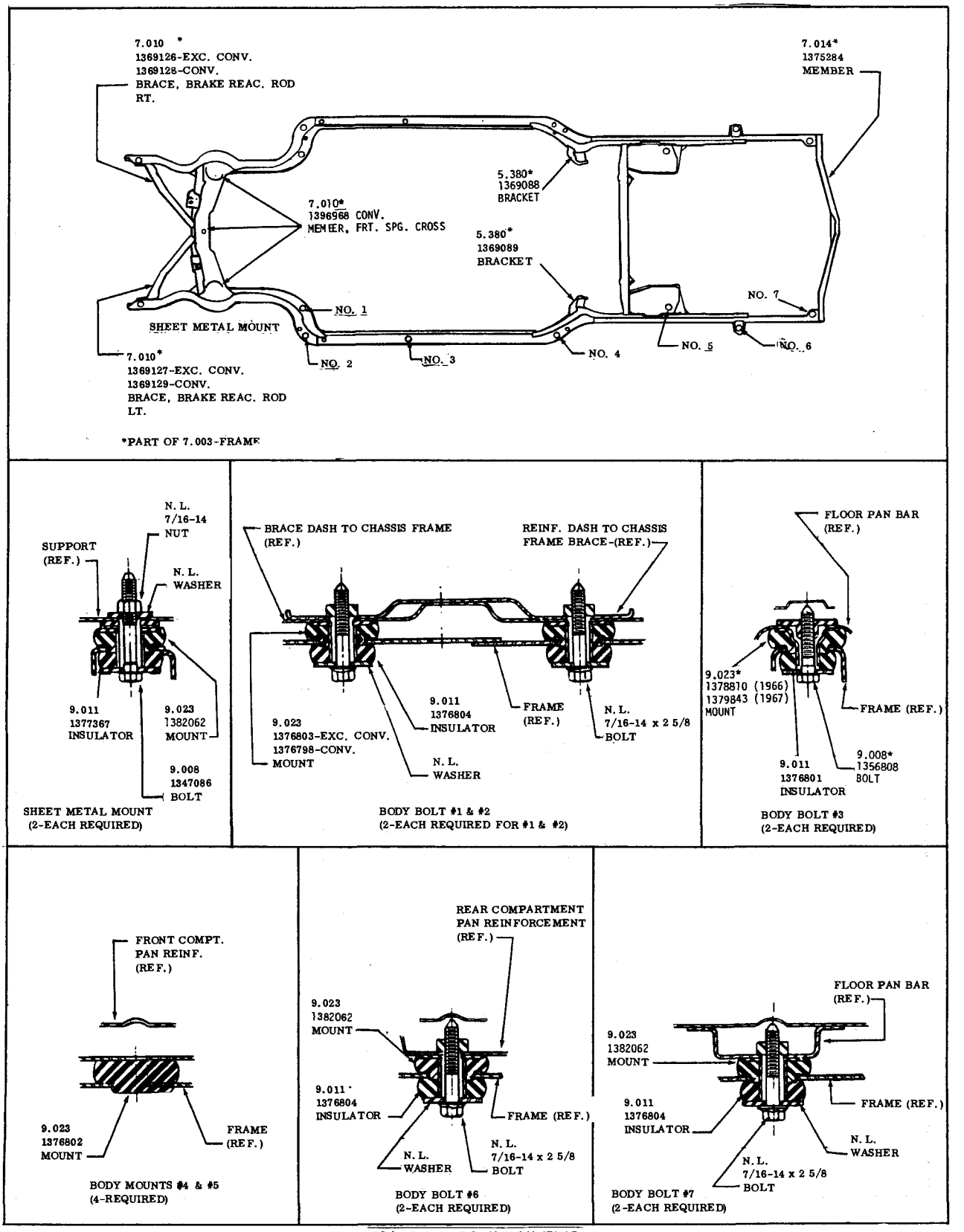

FRAME AND BODY MOUNTING
1966-1970 - LESABRE - WILDCAT - ELECTRA 225

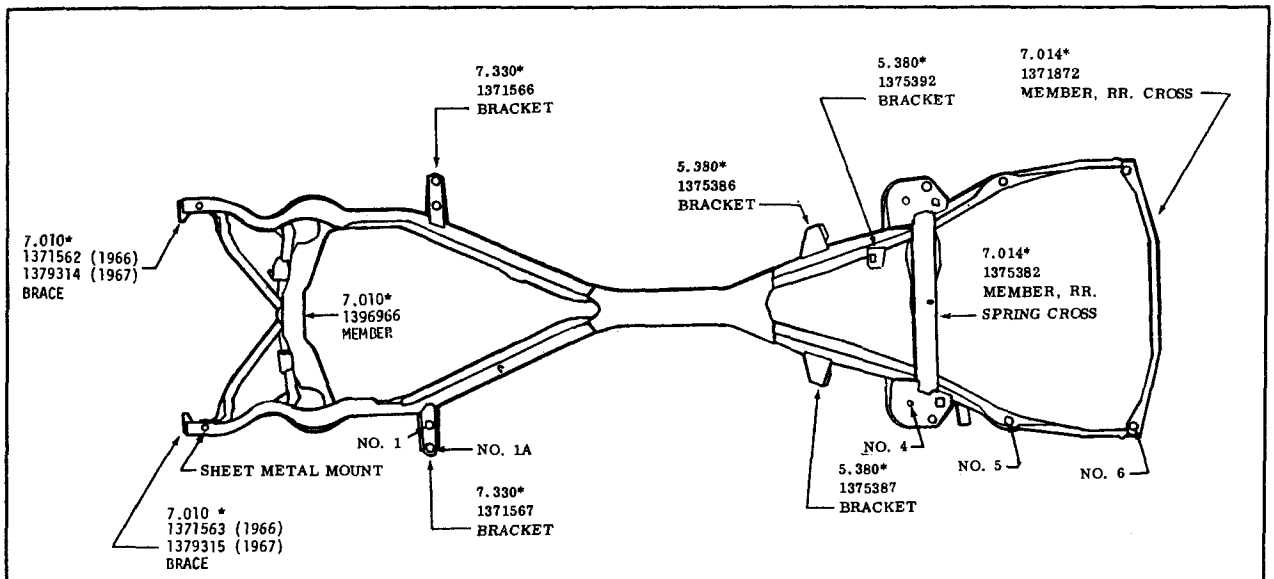

*ALSO INCLUDED IN 7.003 - 1372329 (1966) AND 1378430 (1967) FRAME

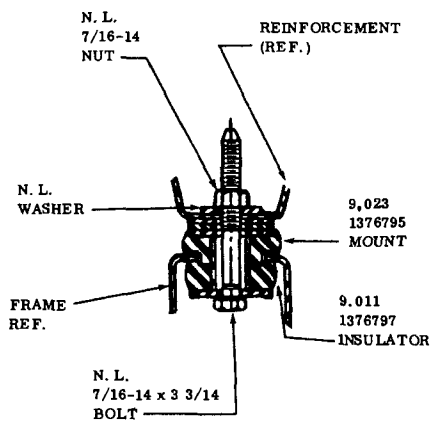

SHEET METAL MOUNT
(2-EACH REQUIRED)

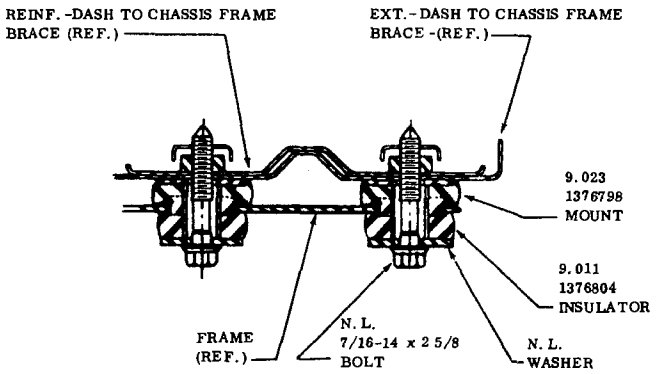

BODY BOLT NO. 1 (INNER) & NO. 1A(OUTER)
(2-EACH REQUIRED)
SAME PARTS USED AT NO. 1 & NO. 1A
LOCATIONS

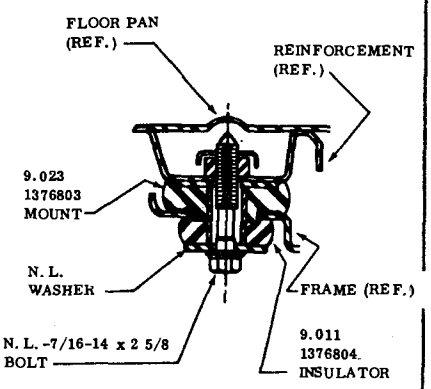

BODY BOLT NO. 4
(2-EACH REQUIRED)

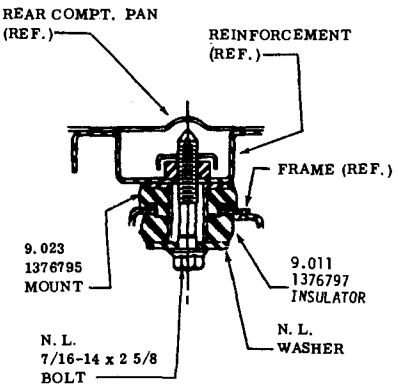

BODY BOLT NO. 5
(2-EACH REQUIRED)

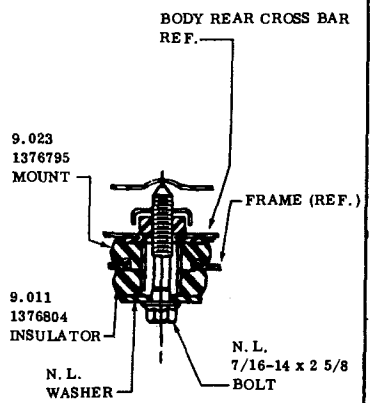

BODY BOLT NO. 6
(2-EACH REQUIRED)

FRAME AND BODY MOUNTING
1966-1967 - RIVIERA

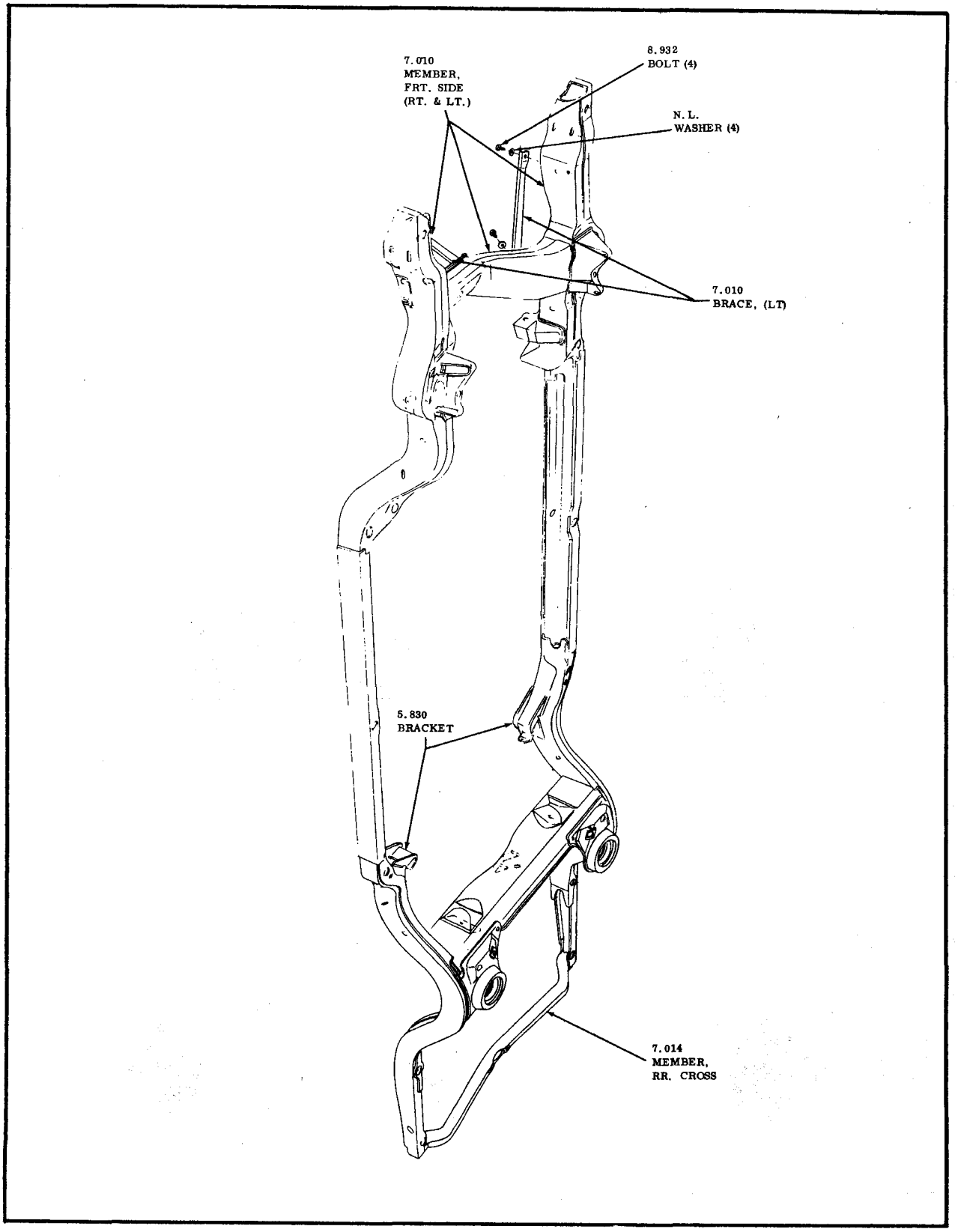

(TYPICAL)
FRAME
1971-1972-50-60-80-9000

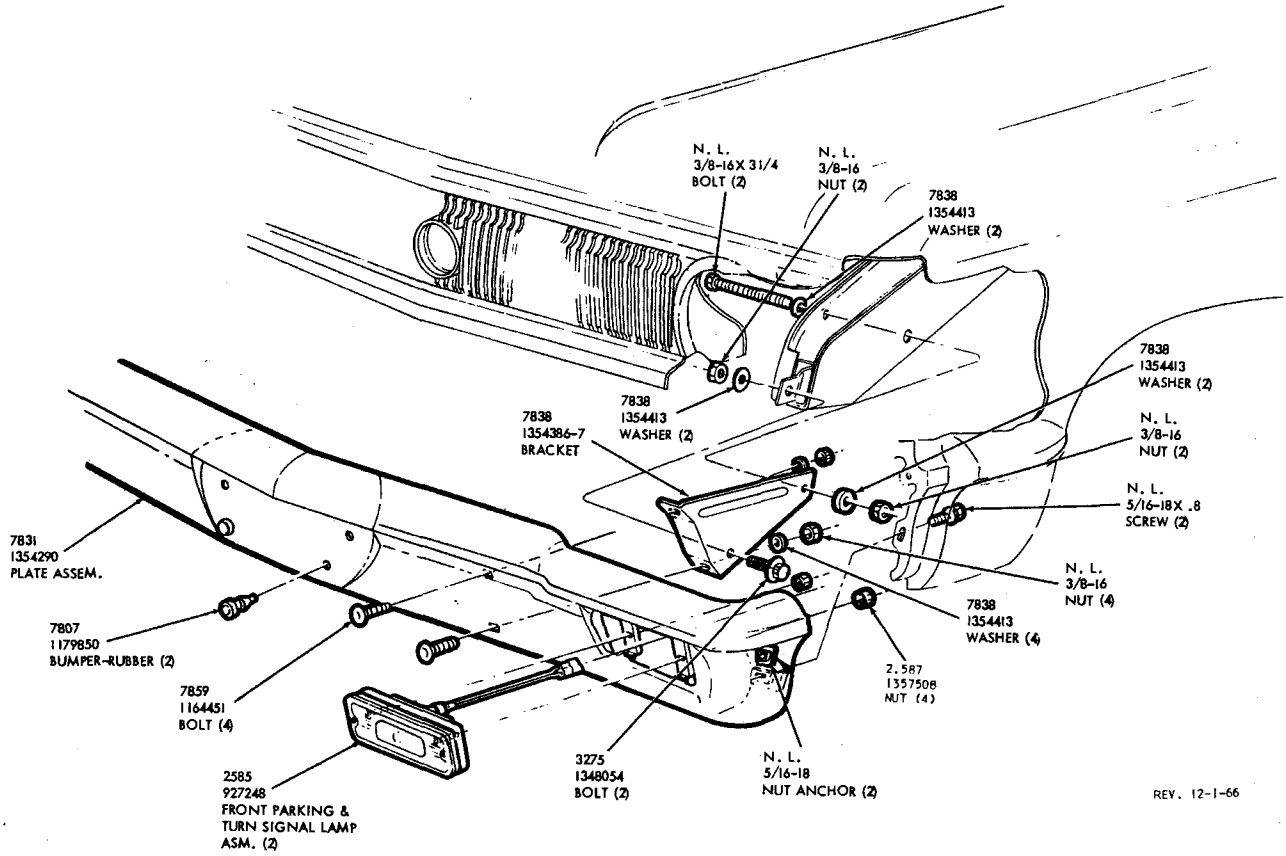

BUMPER, FRONT
1963-4000-4100-4300

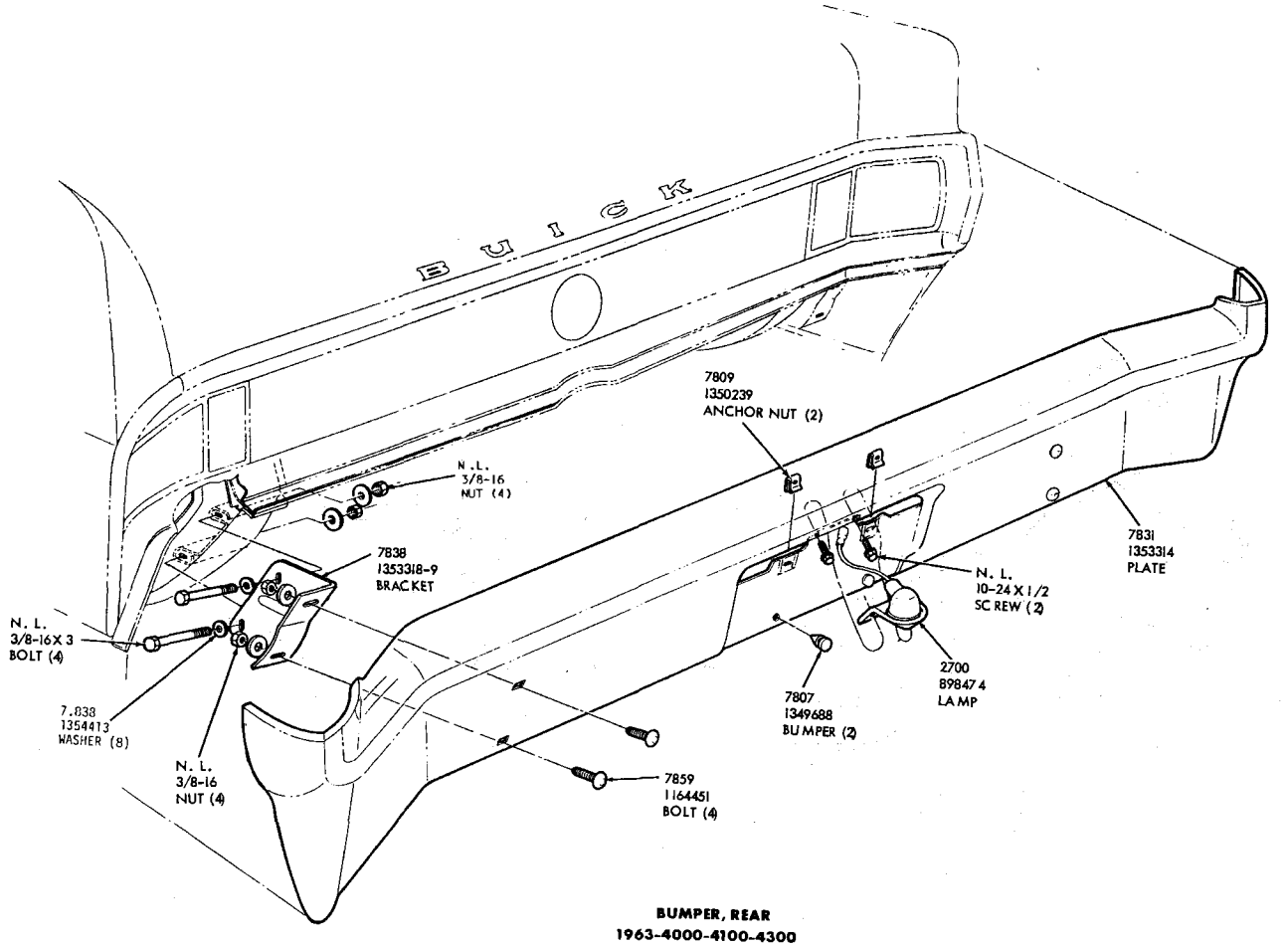

BUMPER, REAR
1963-4000-4100-4300

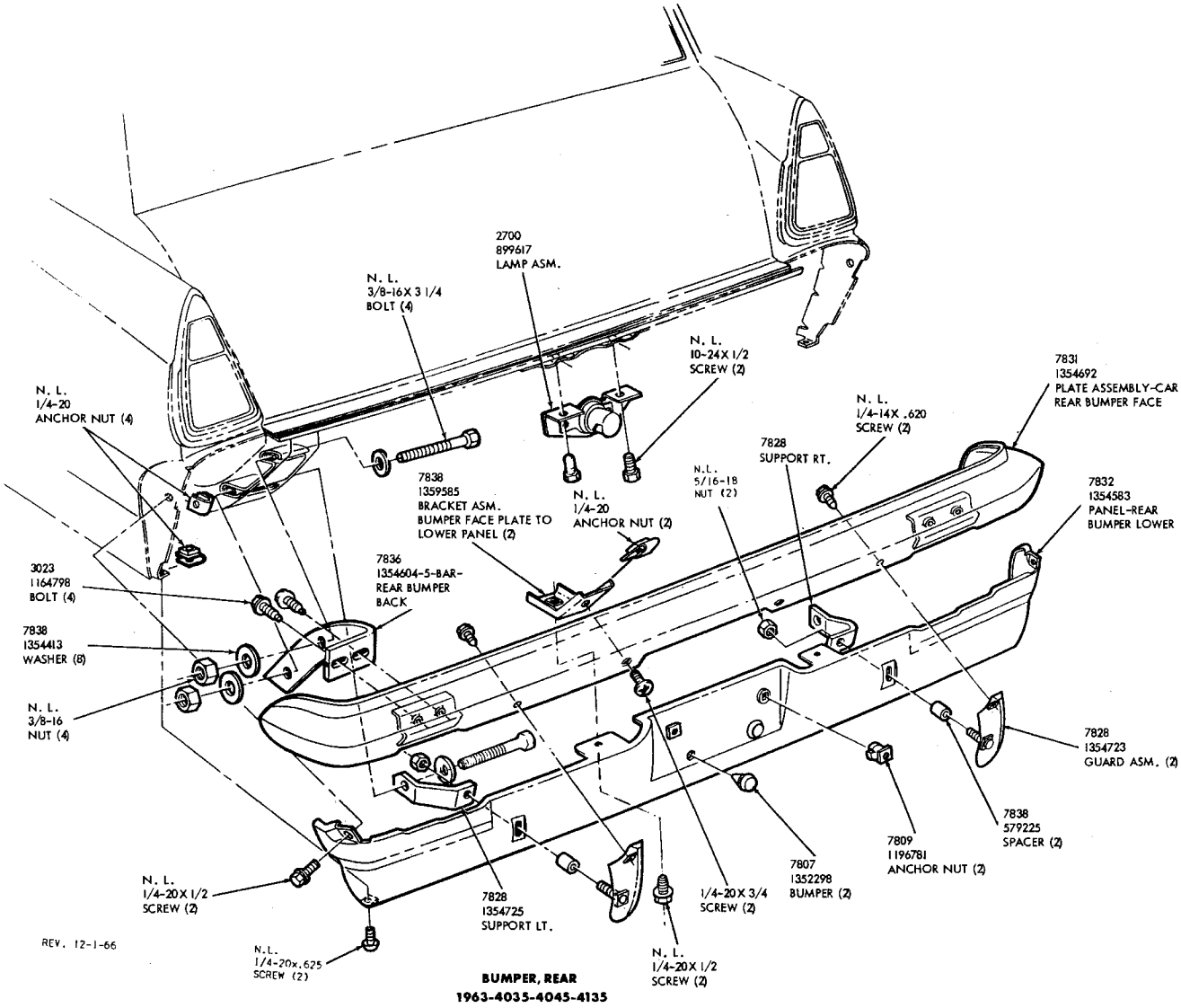

BUMPER, REAR
1963-4035-4045-4135

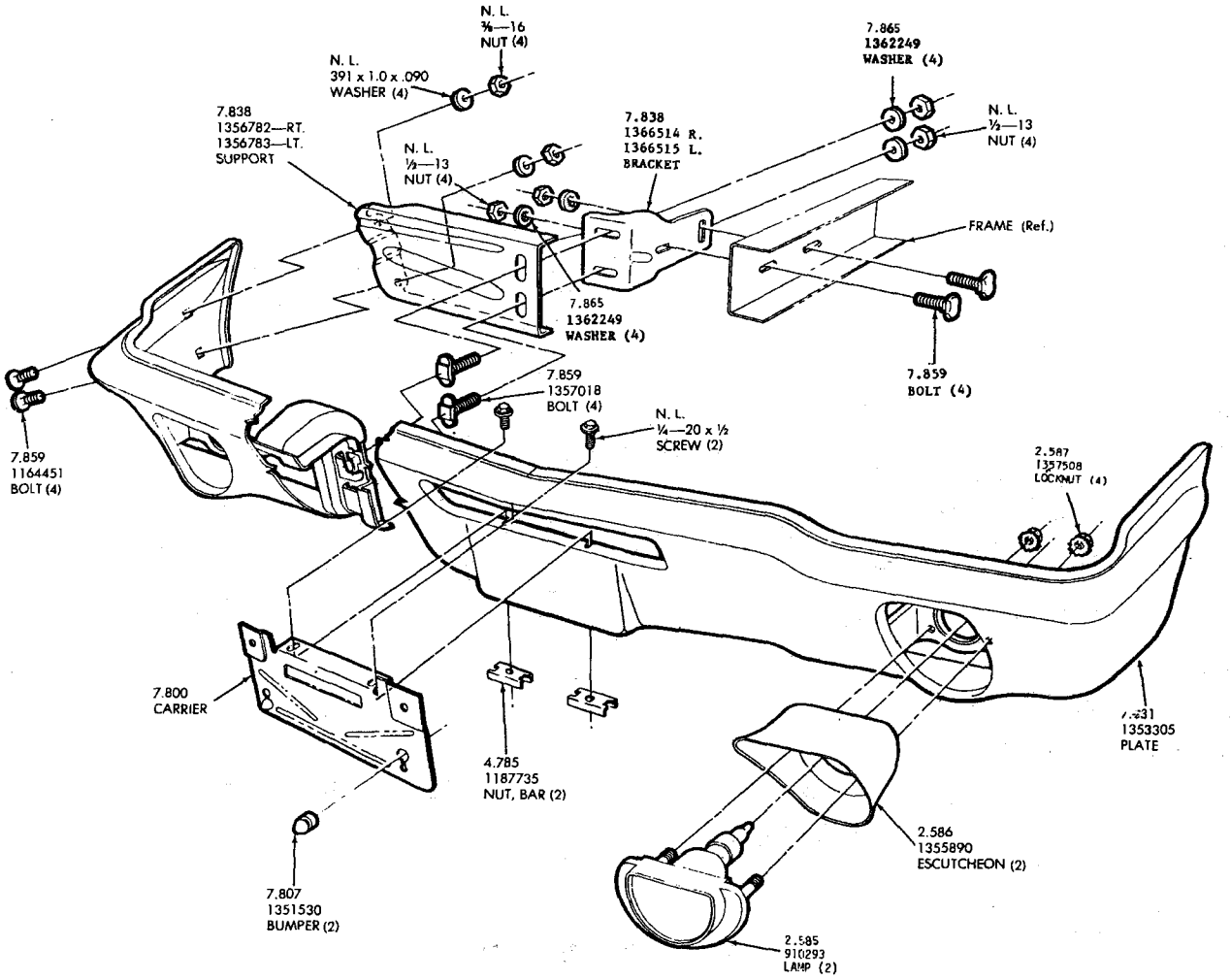

FRONT BUMPER
1963 — 4400-4600-4800

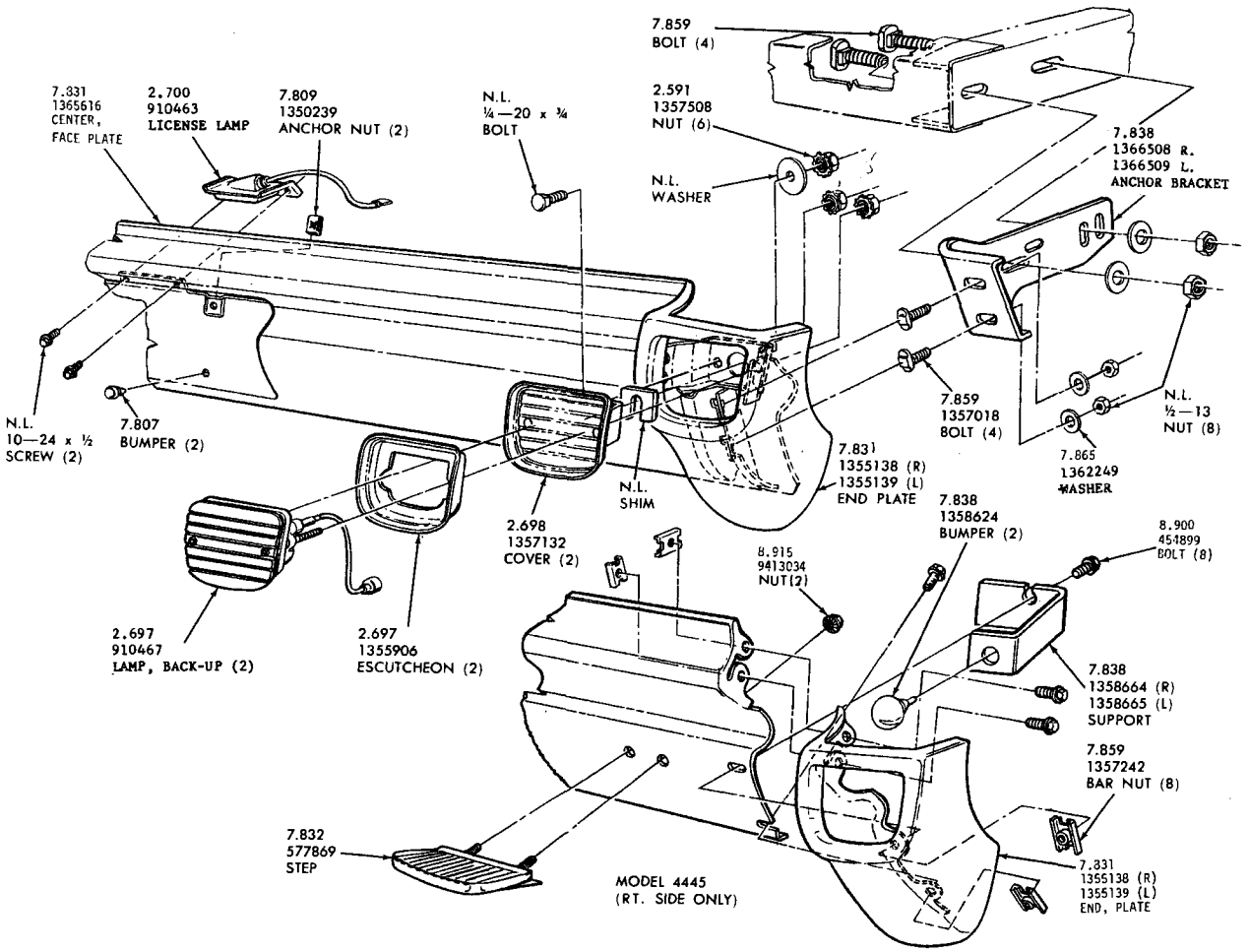

REAR BUMPER AND BACK-UP LAMPS
1963-4435-4445-4635

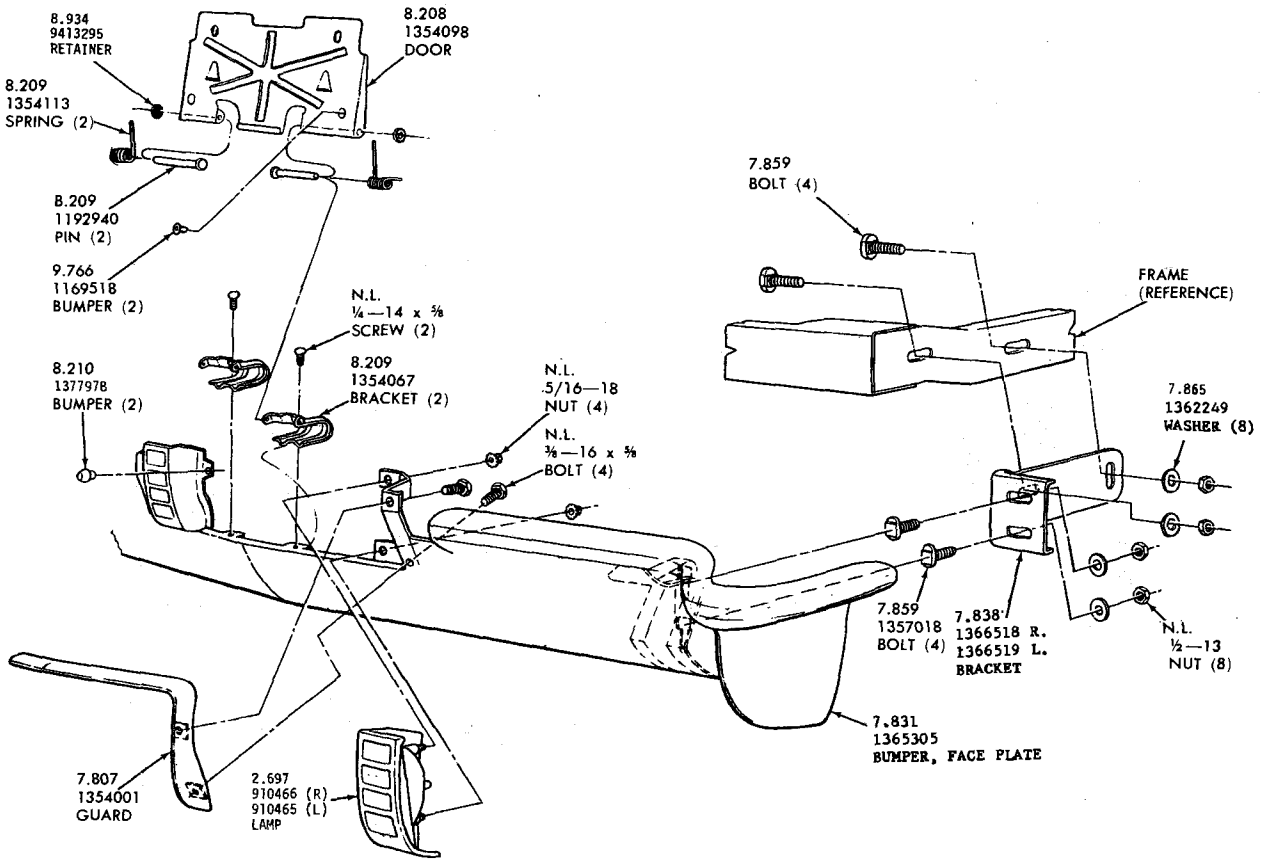

REAR BUMPER 1963—1964—4700

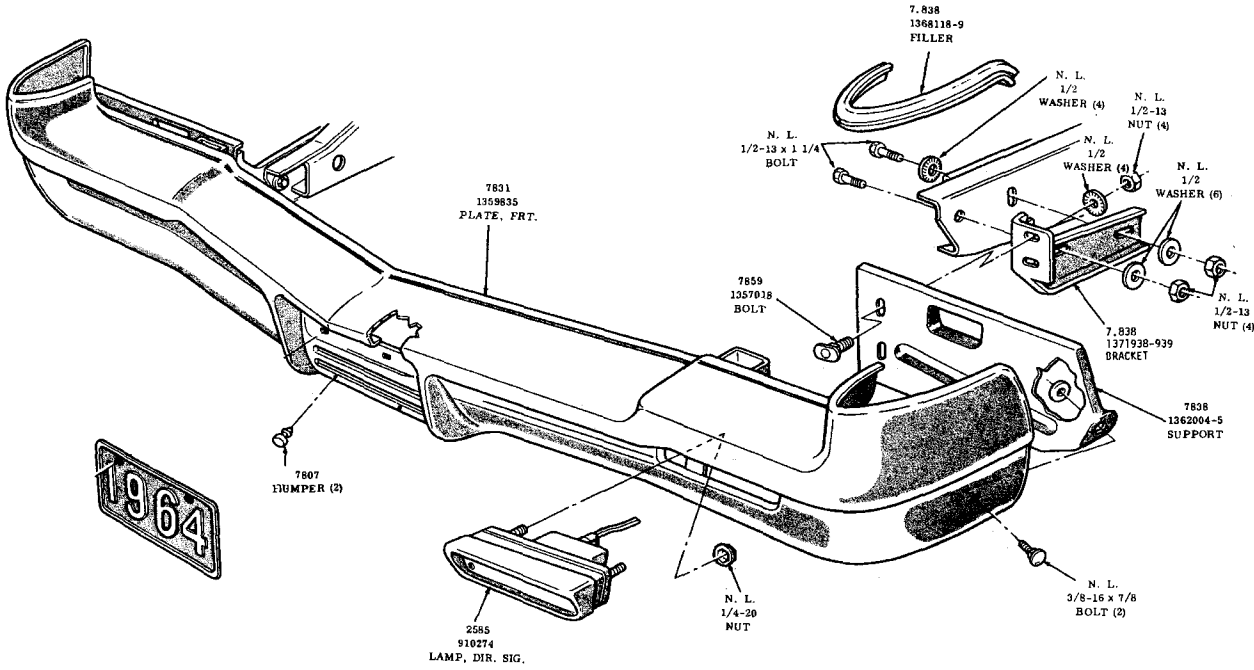

FRONT BUMPER
1964—4000—4100—4300

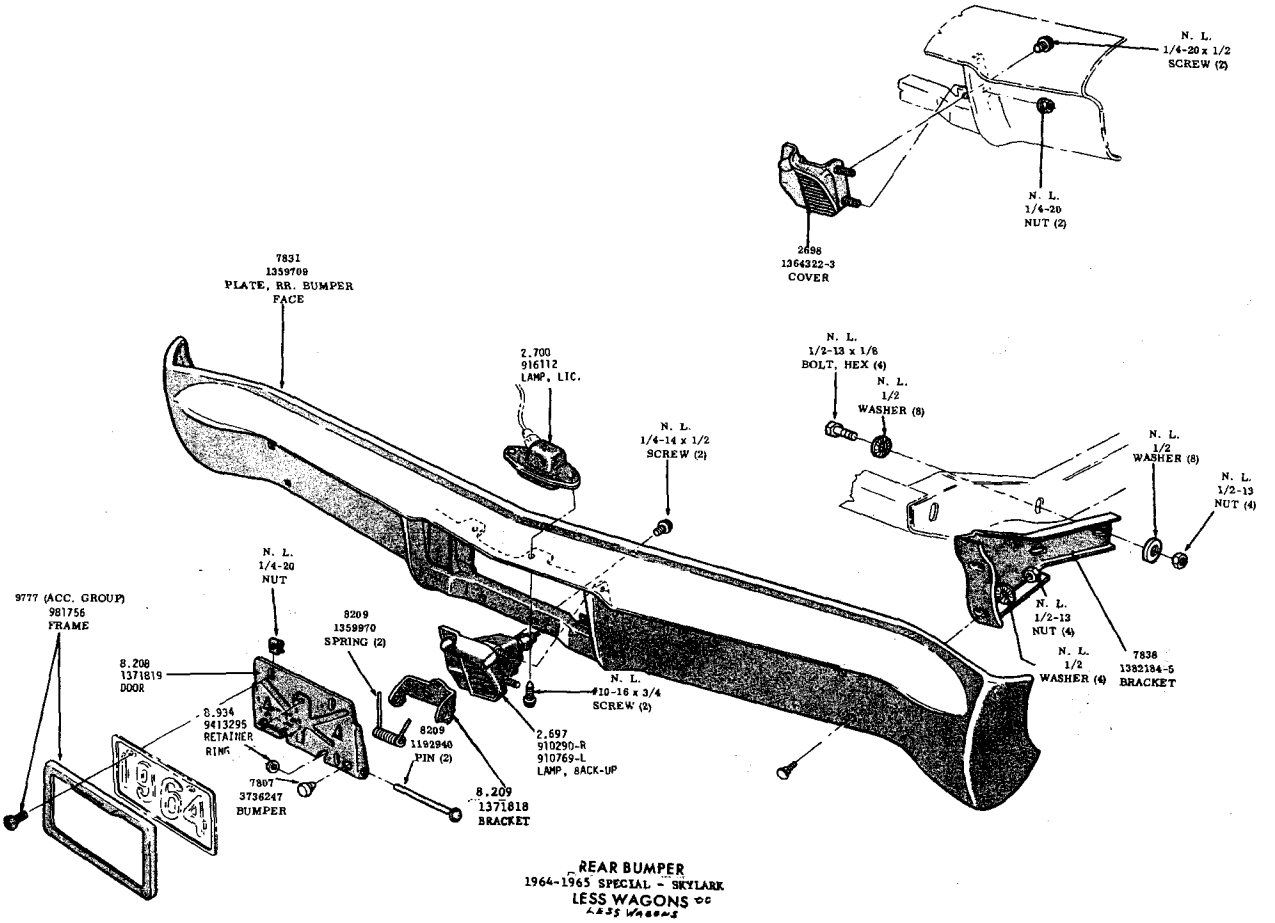

REAR BUMPER
1964-1965 SPECIAL - SKYLARK
LESS WAGONS
LESS WAGONS

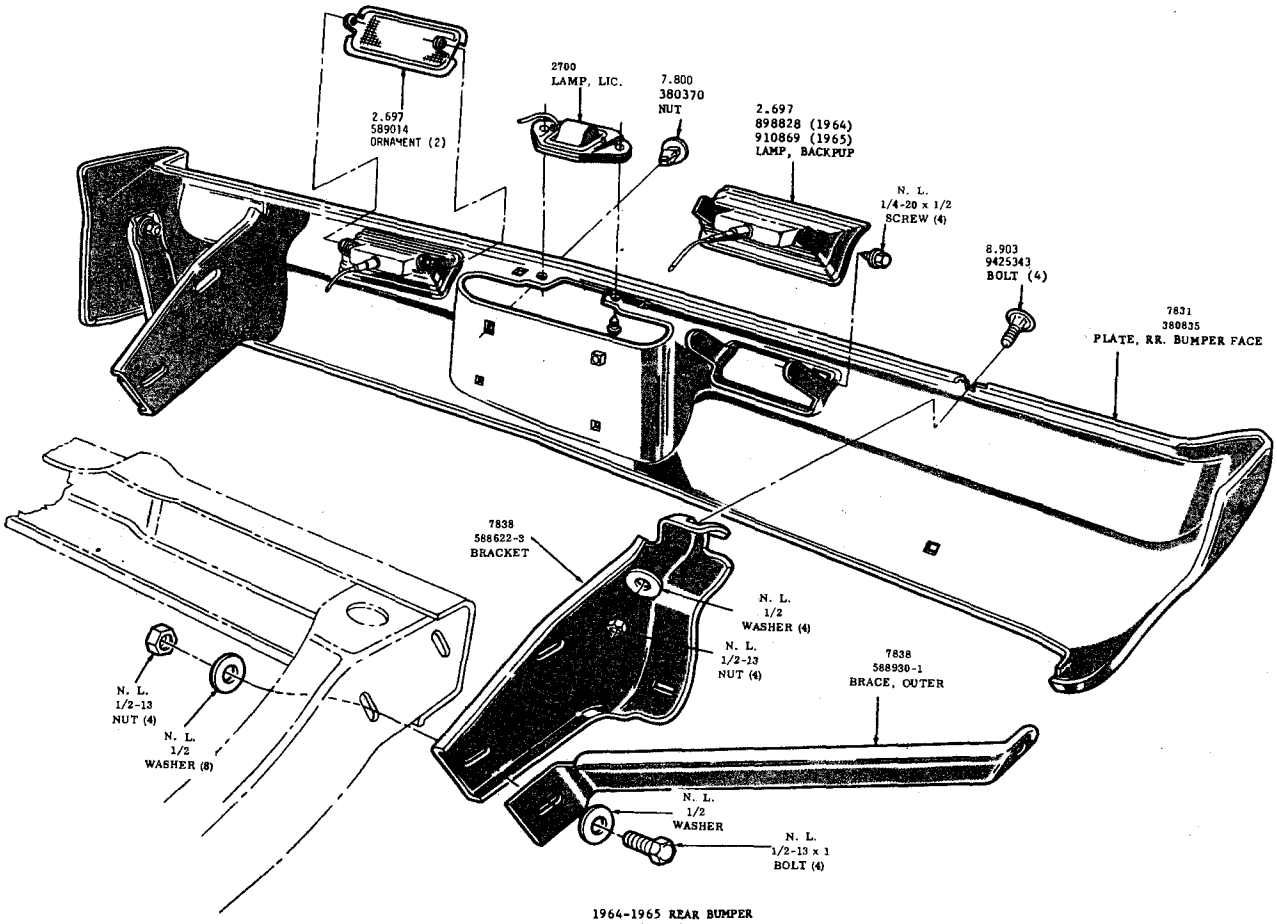

1964-1965 REAR BUMPER
LOWER SERIES WAGON

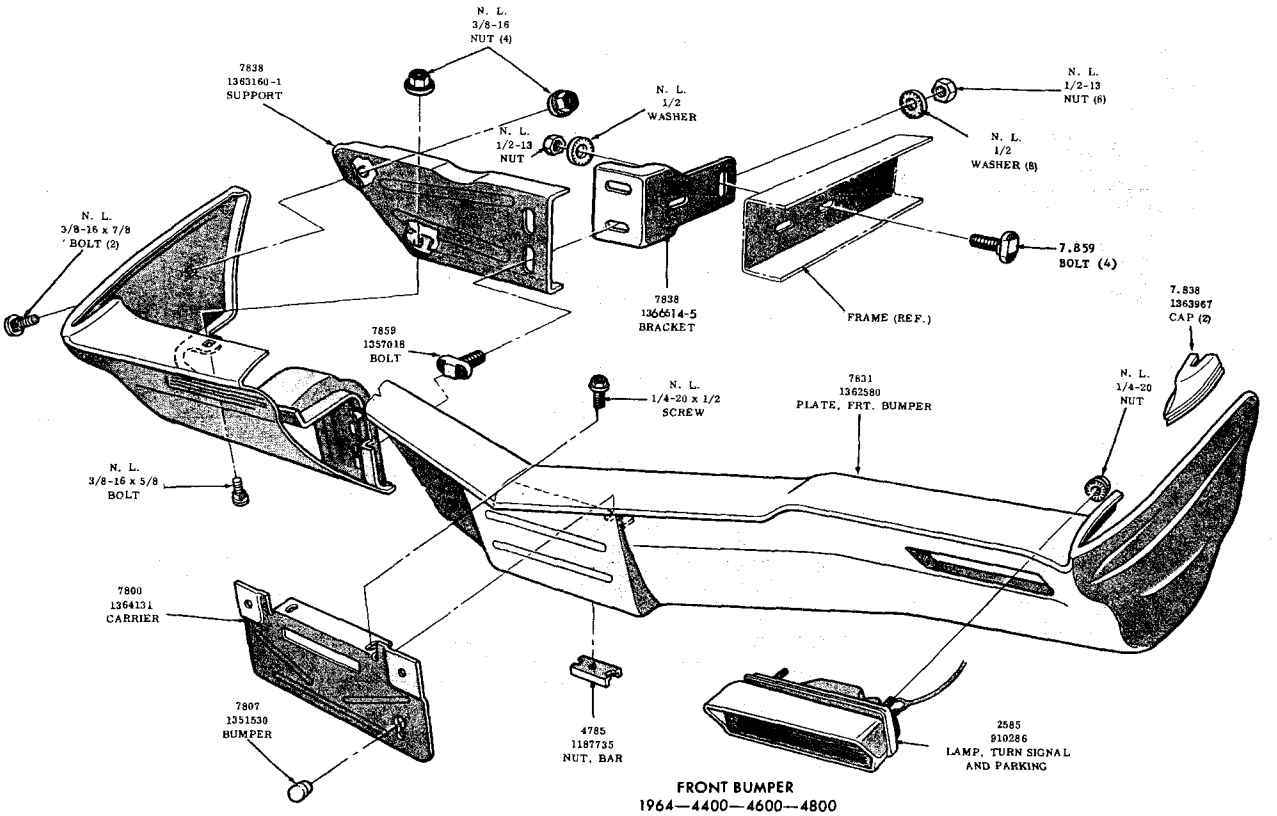

FRONT BUMPER
1964—4400—4600—4800

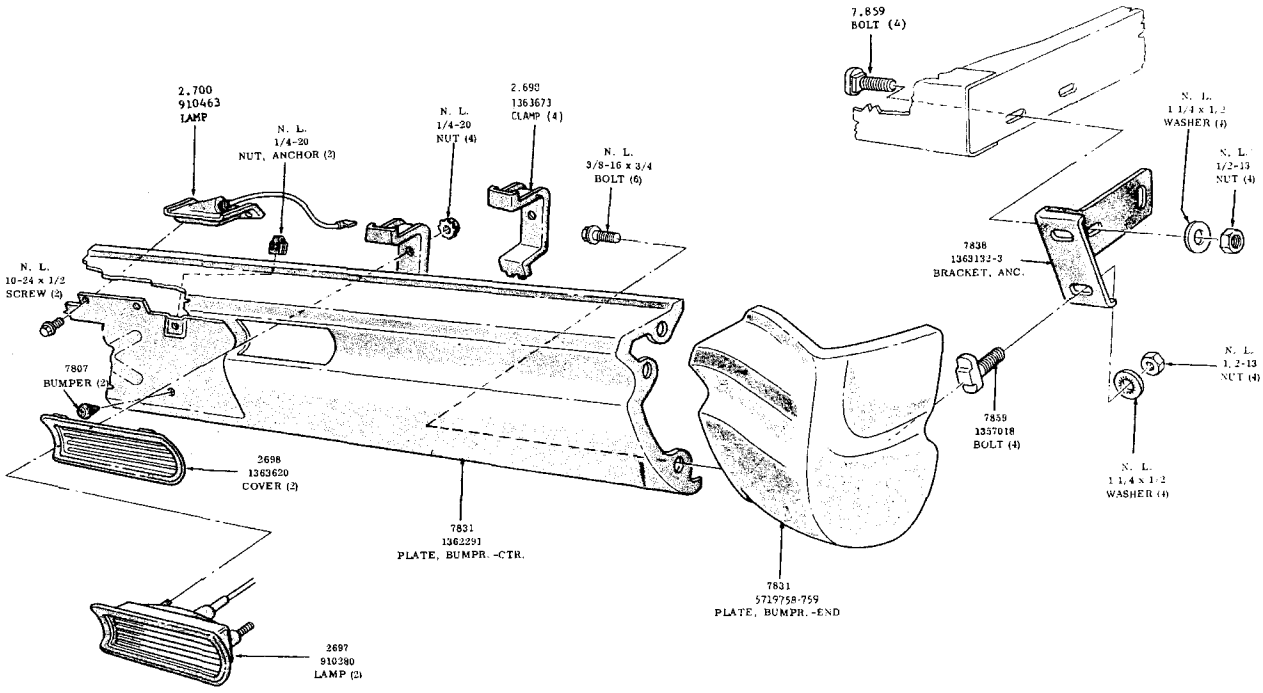

REAR BUMPER - 1964—4400—4600
LESS ESTATE WAGONS

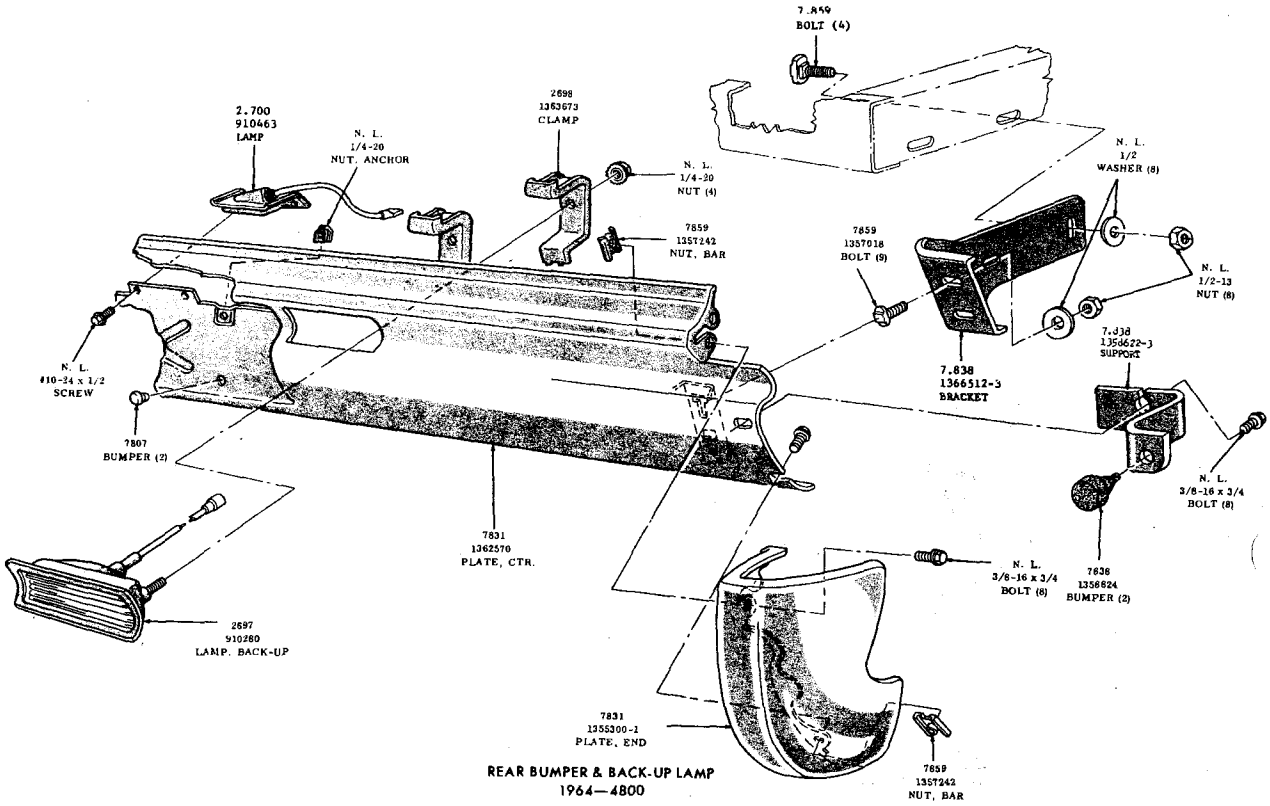

REAR BUMPER & BACK-UP LAMP
1964—4800

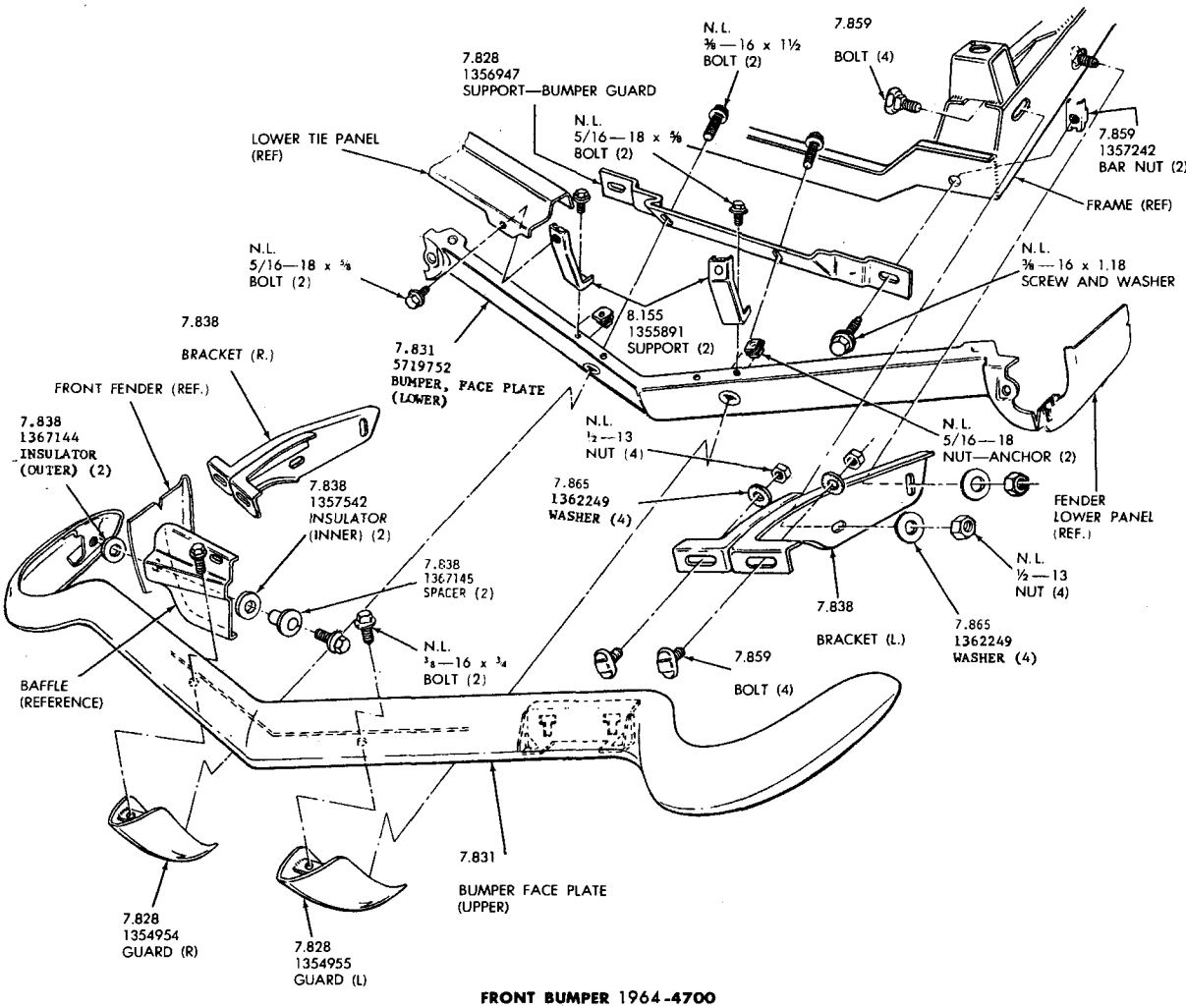

FRONT BUMPER 1964-4700

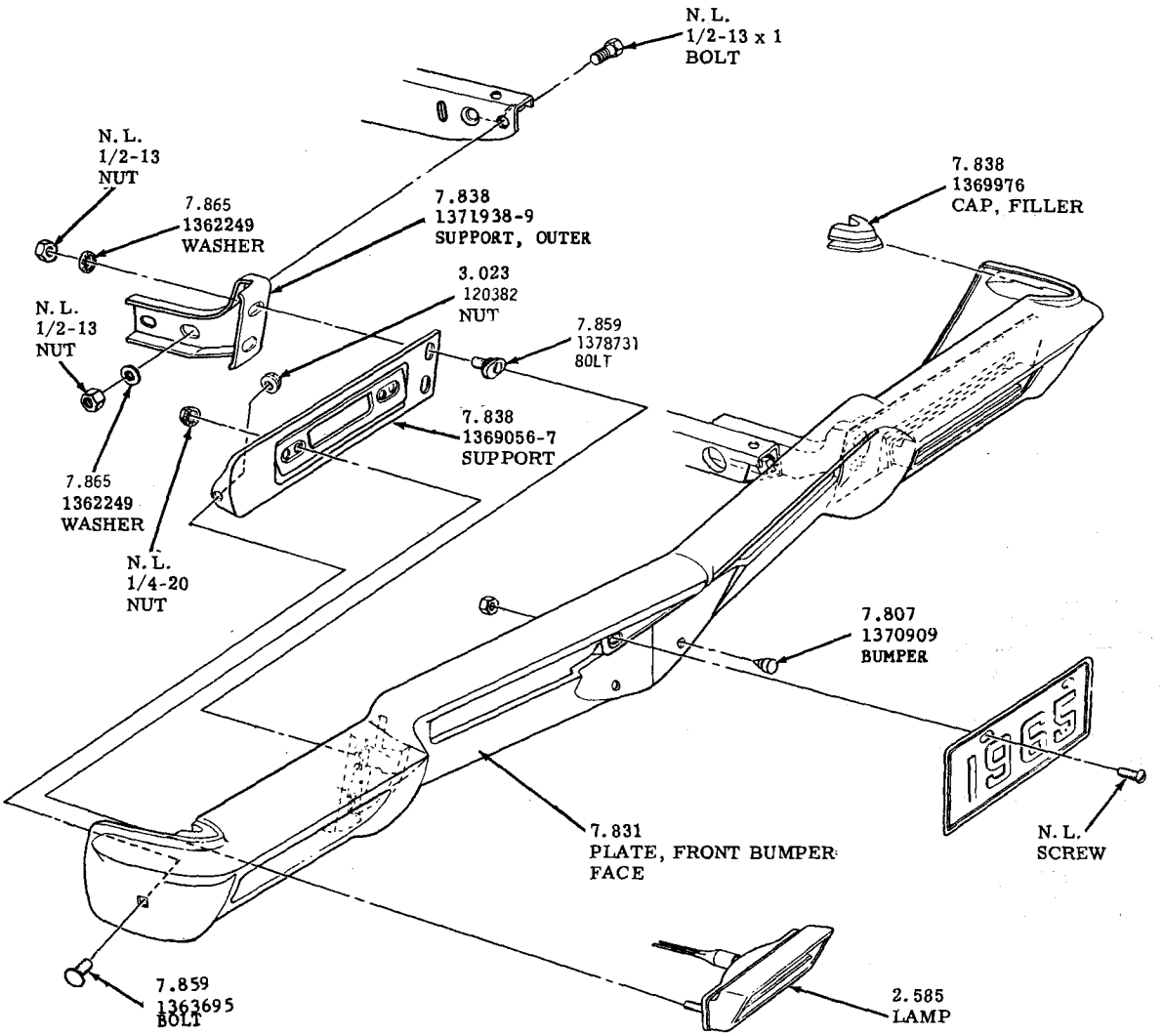

FRONT BUMPER
1965 - SPECIAL - SKYLARK

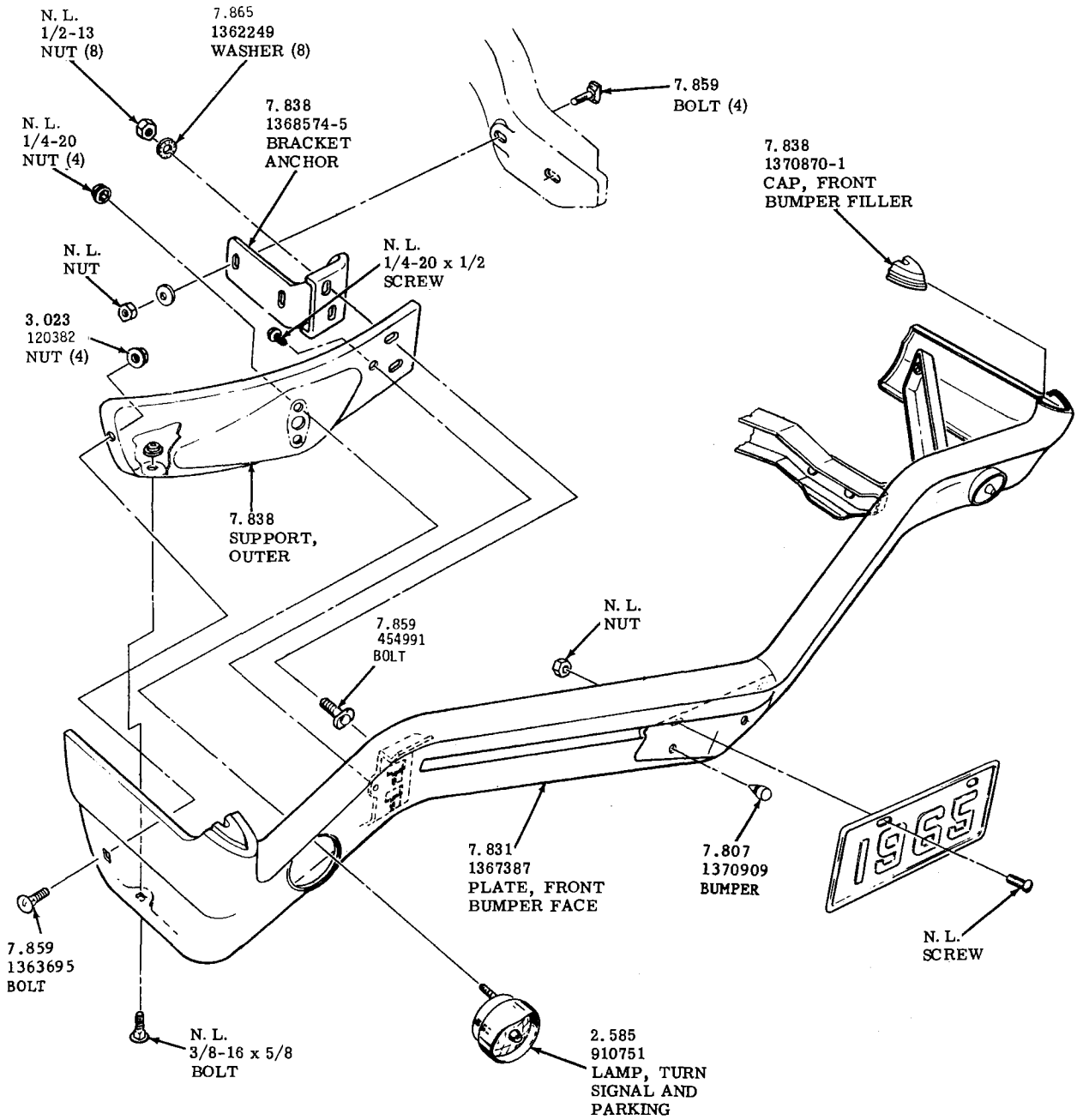

FRONT BUMPER
1965 - LESABRE, WILDCAT, ELECTRA 225

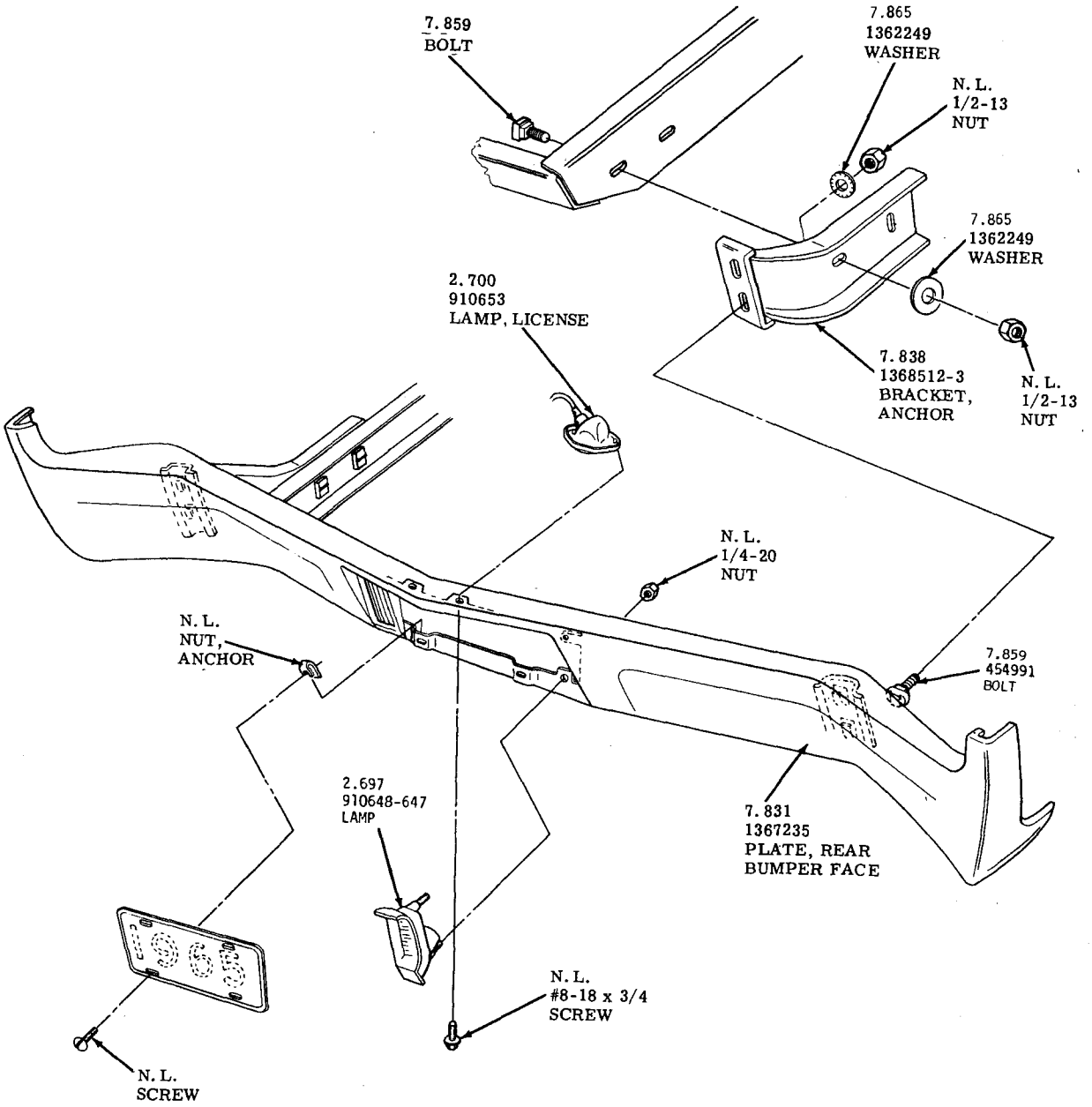

REAR BUMPER
1965 - LESABRE, WILDCAT

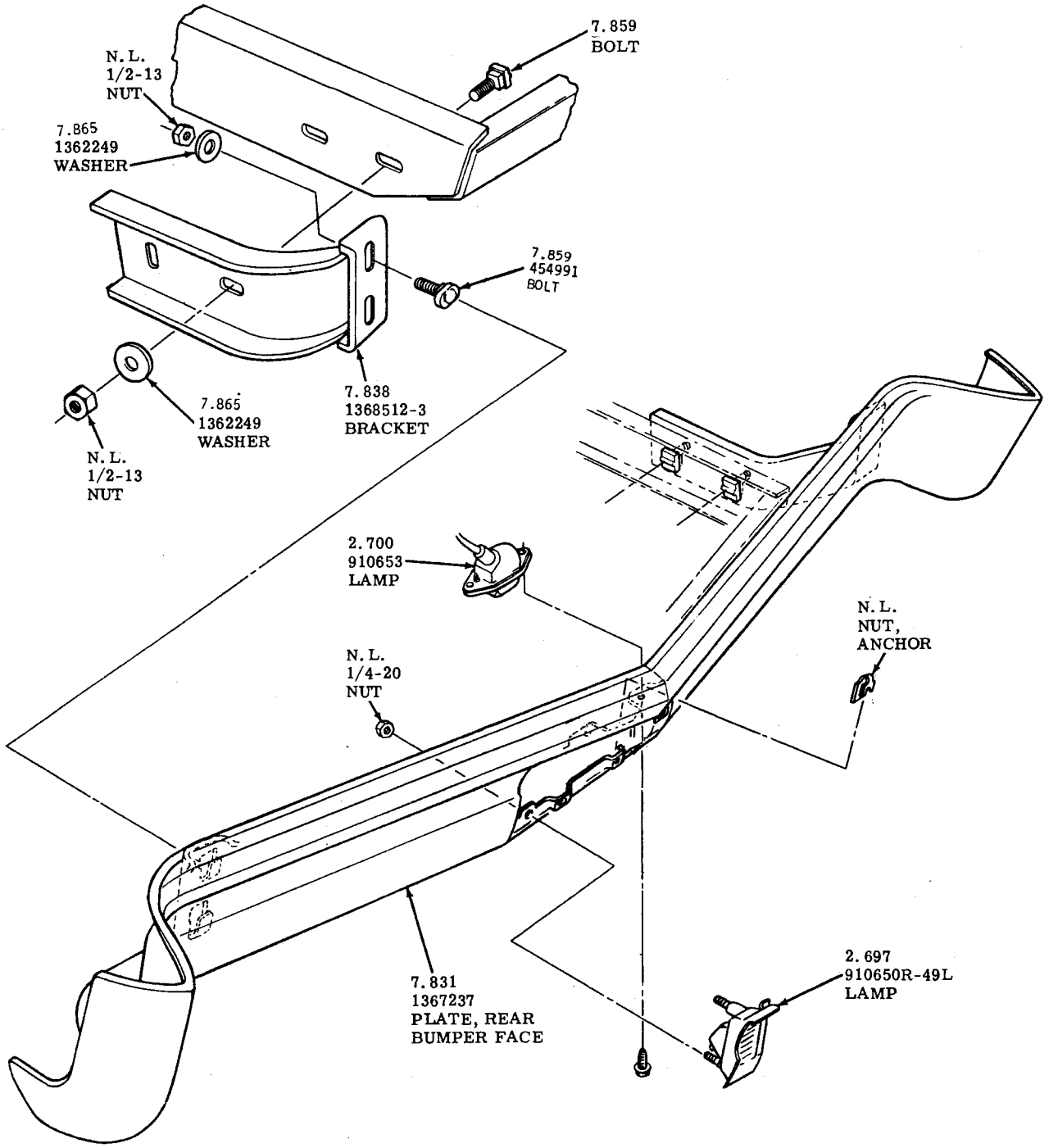

REAR BUMPER
1965 - ELECTRA 225

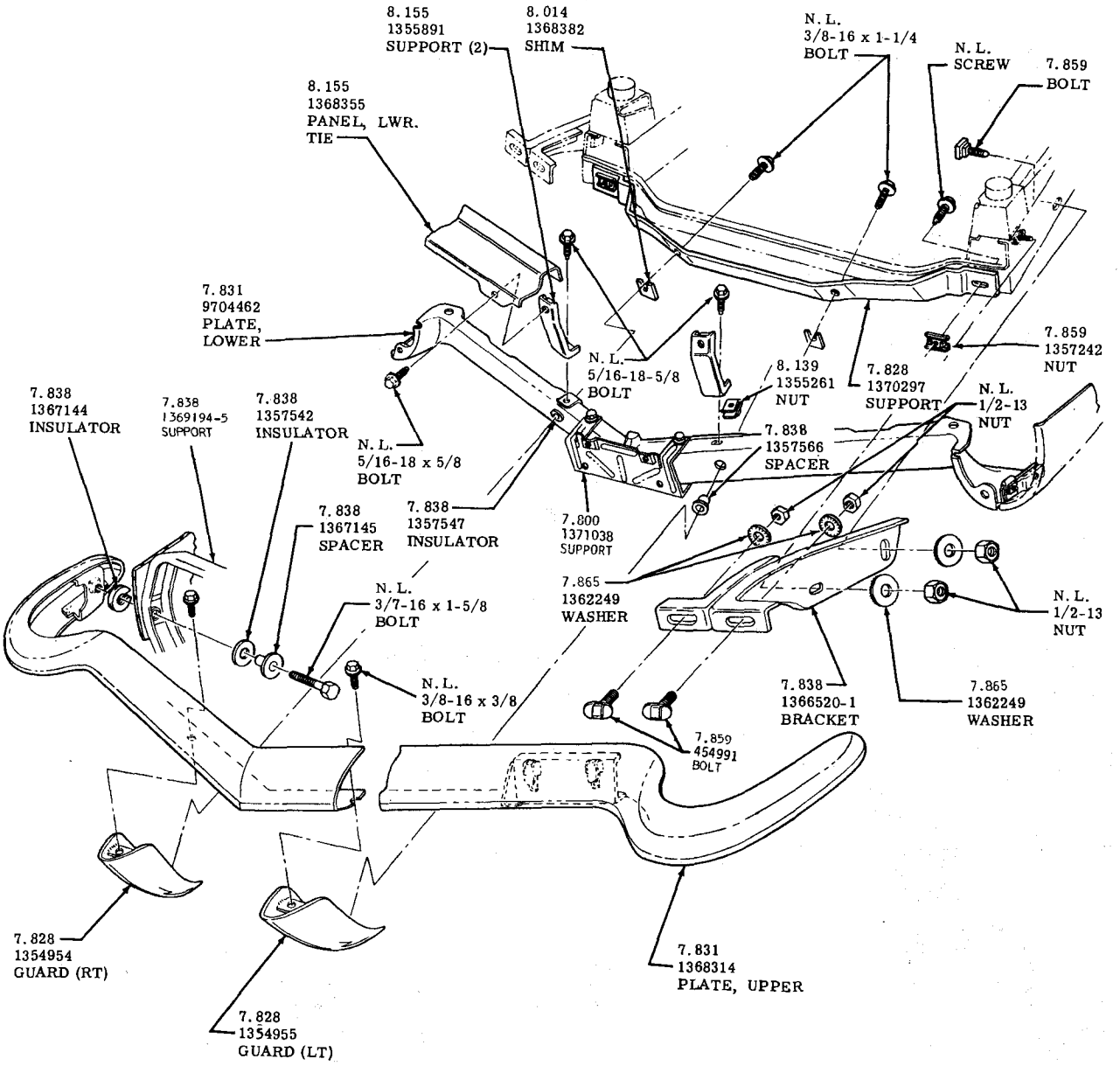

FRONT BUMPER
1965 - RIVIERA

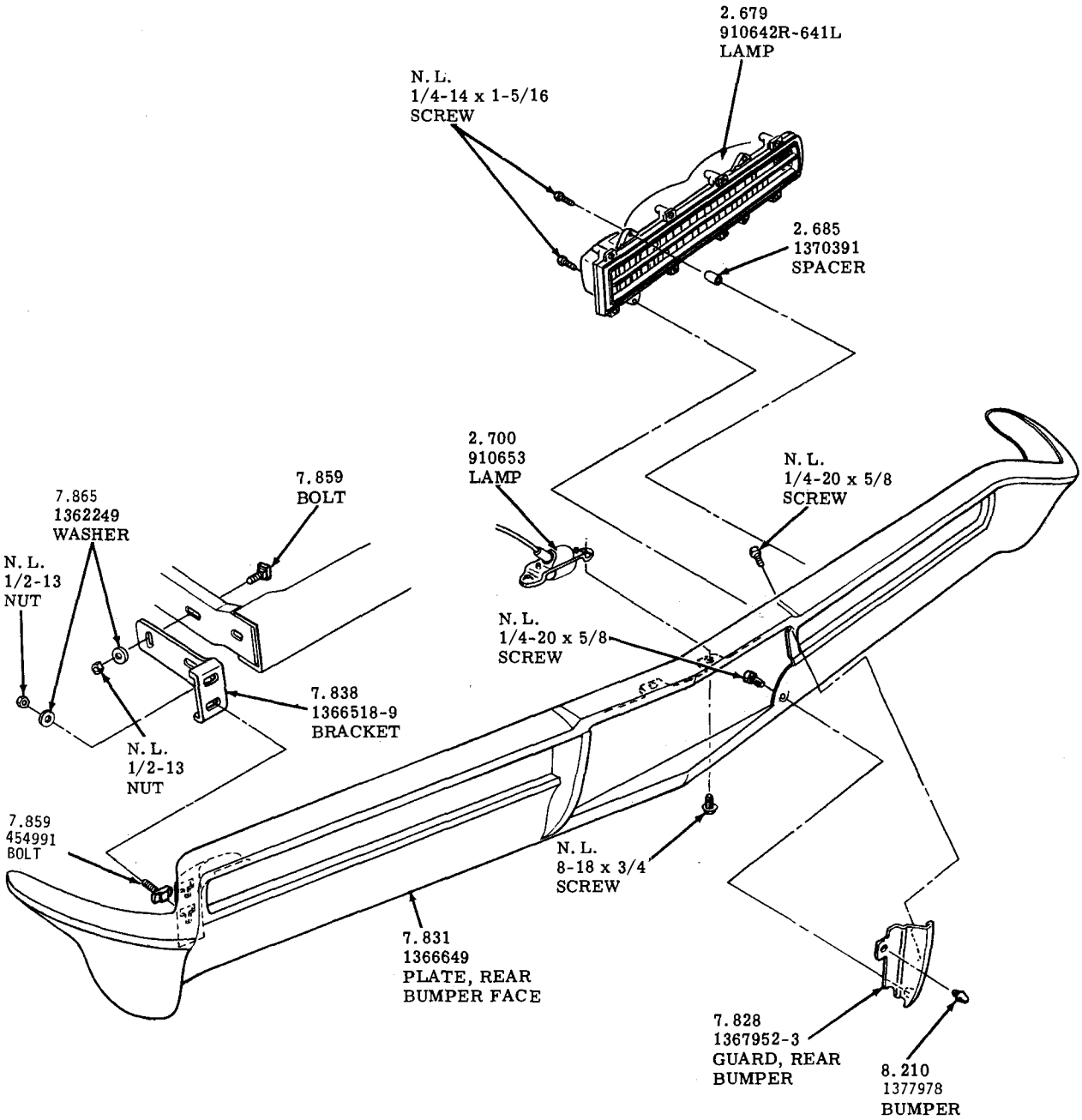

REAR BUMPER
1965 - RIVIERA

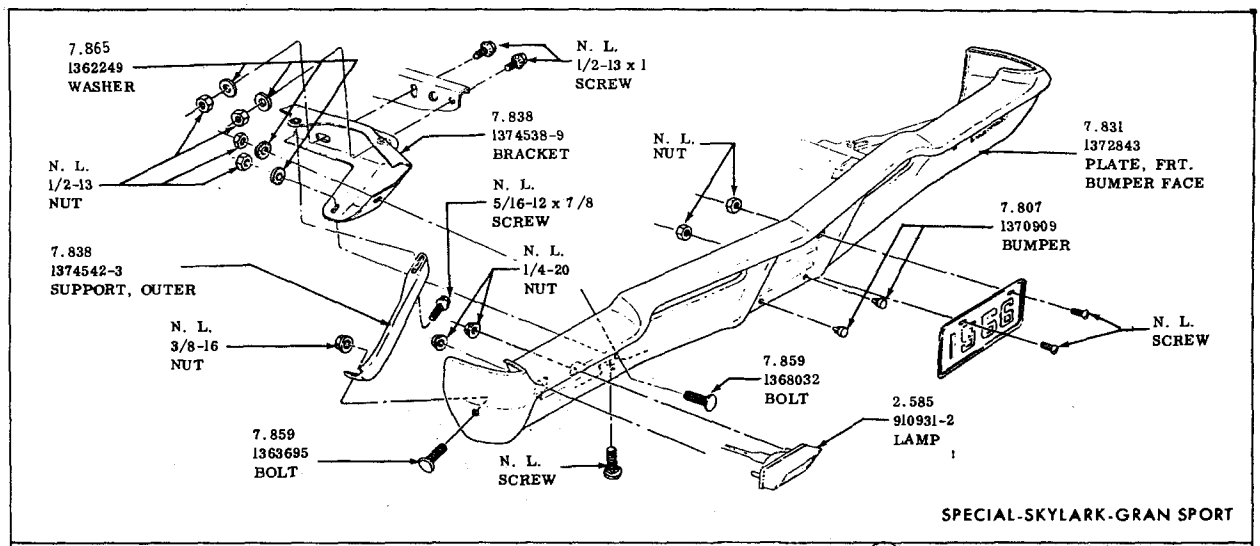

SPECIAL-SKYLARK-GRAN SPORT

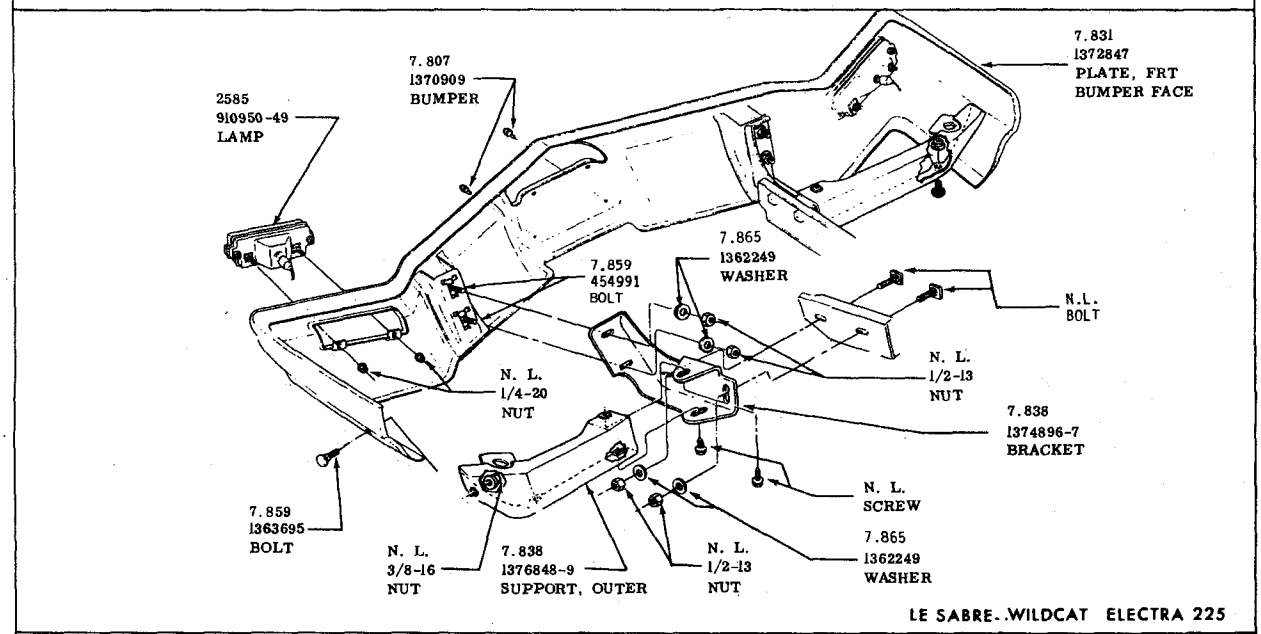

LE SABRE-WILDCAT ELECTRA 225

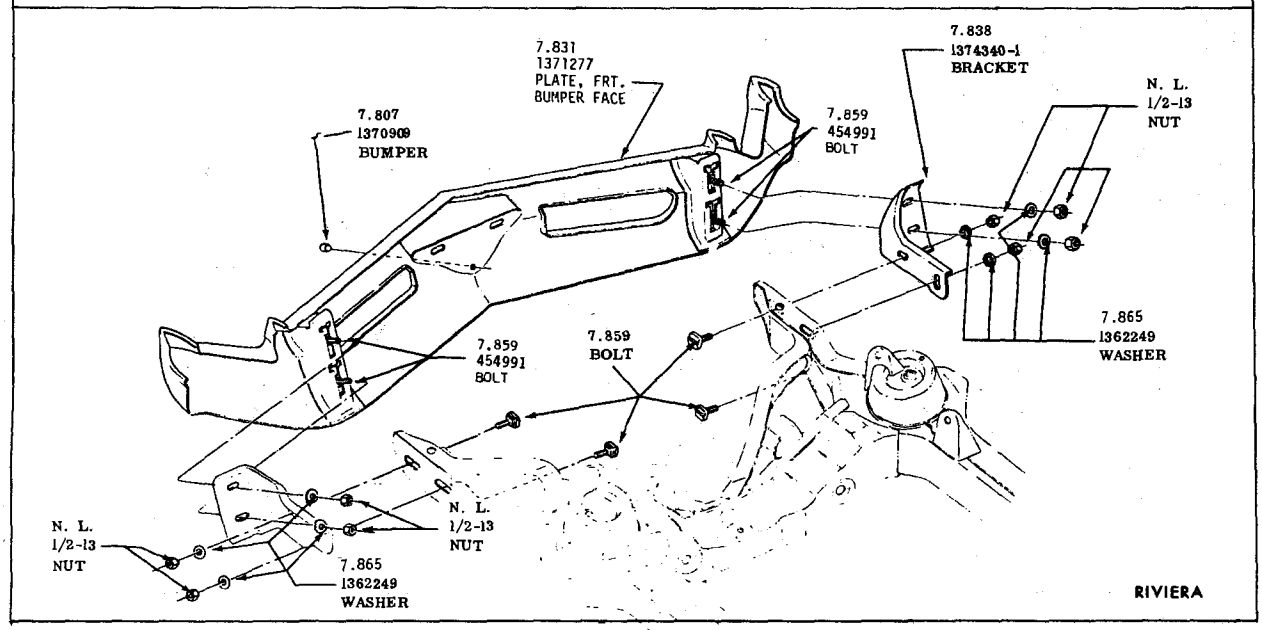

RIVIERA

FRONT BUMPERS
1966-ALL

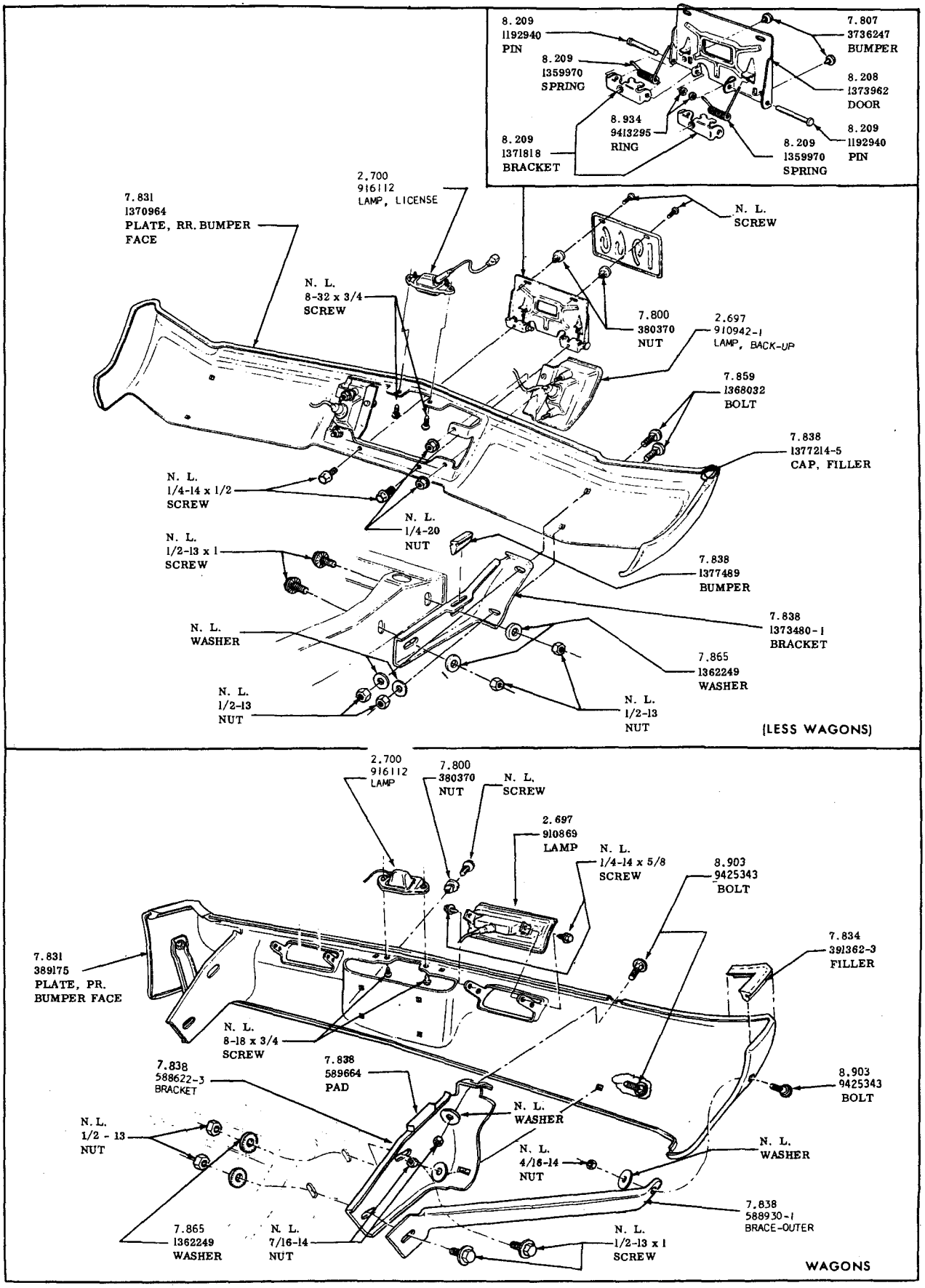

REAR BUMPERS
1966-SPECIAL-SKYLARK-GRAN SPORT

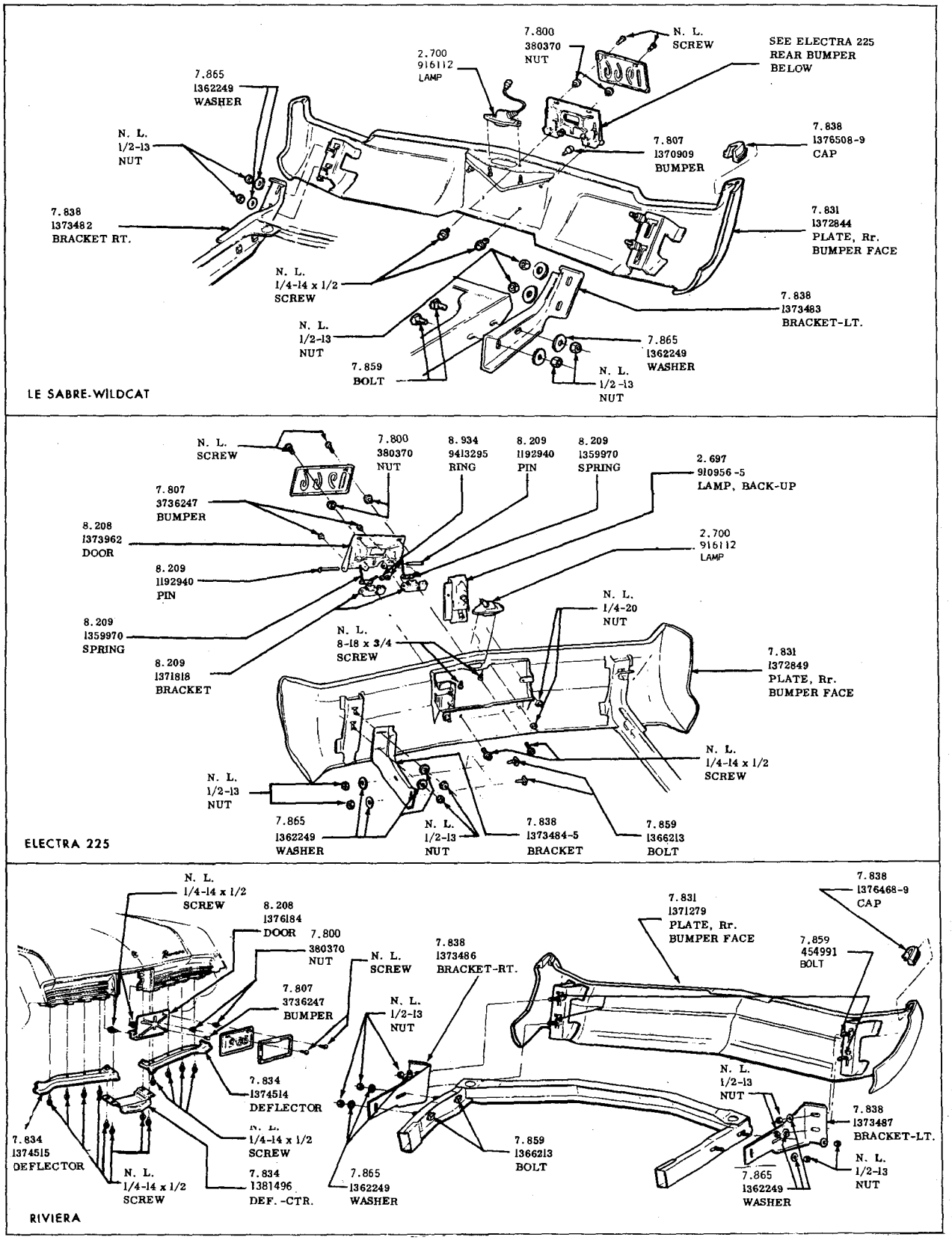

REAR BUMPERS
1966-LE SABRE-WILDCAT
ELECTRA 225-RIVIERA

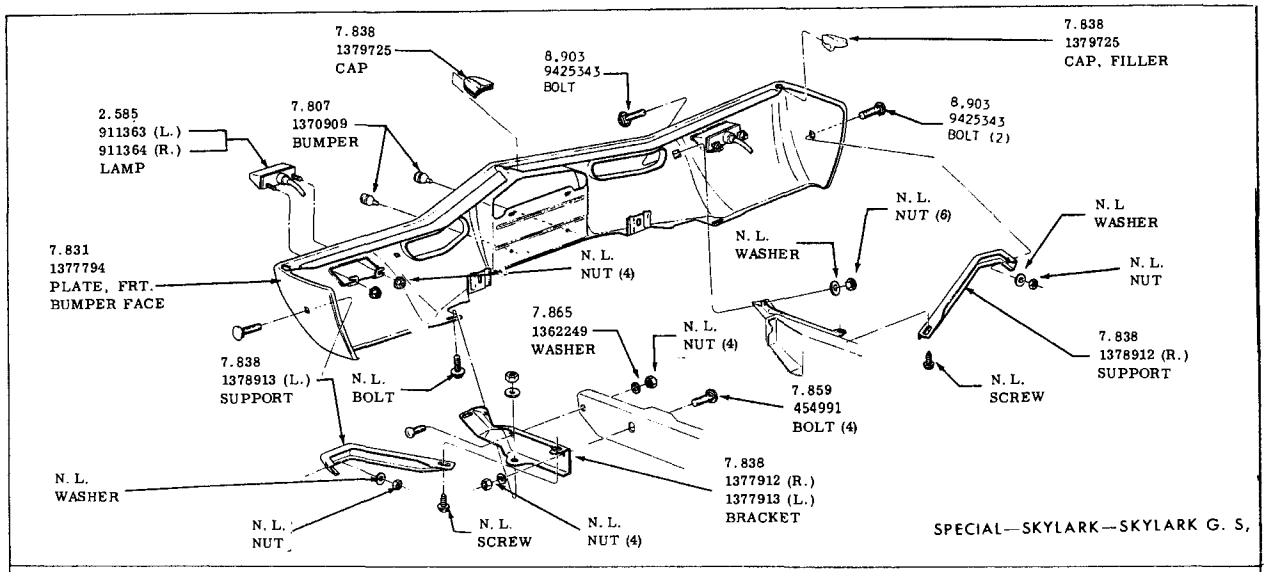

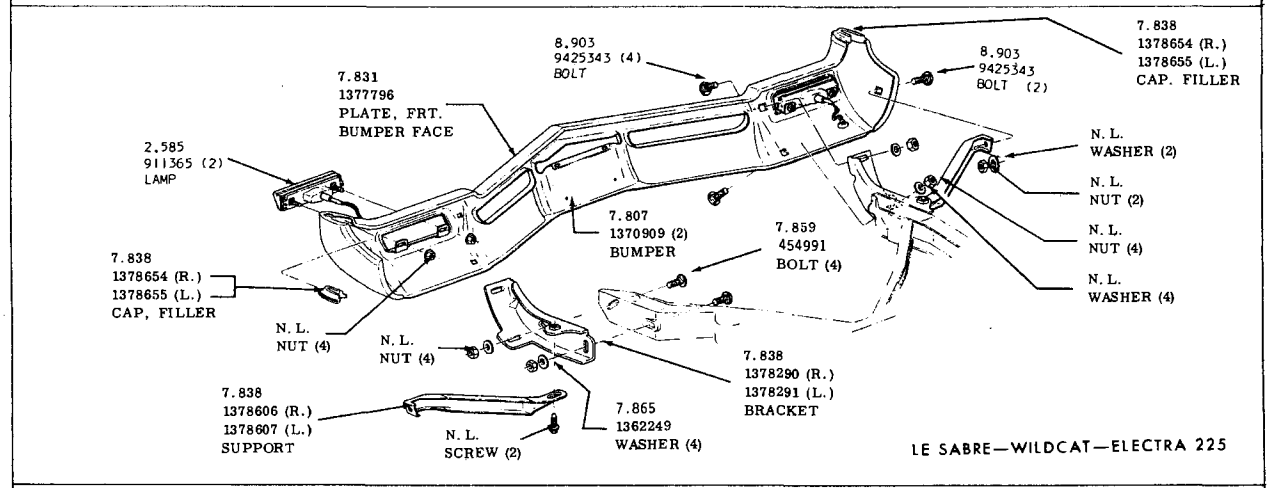

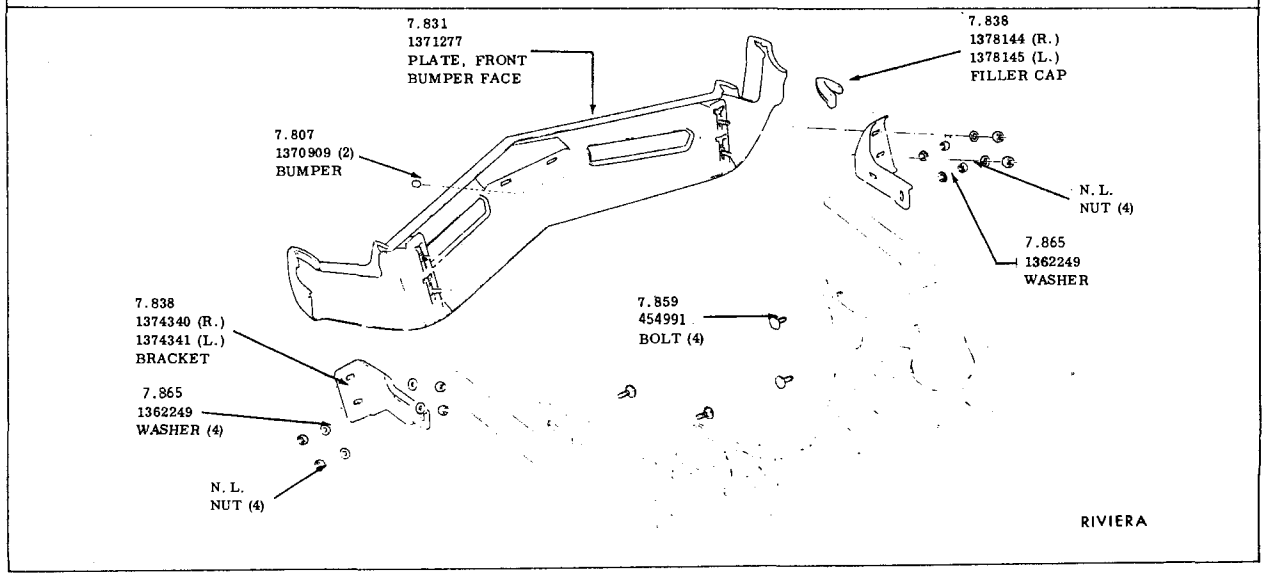

FRONT BUMPERS

1967 — ALL

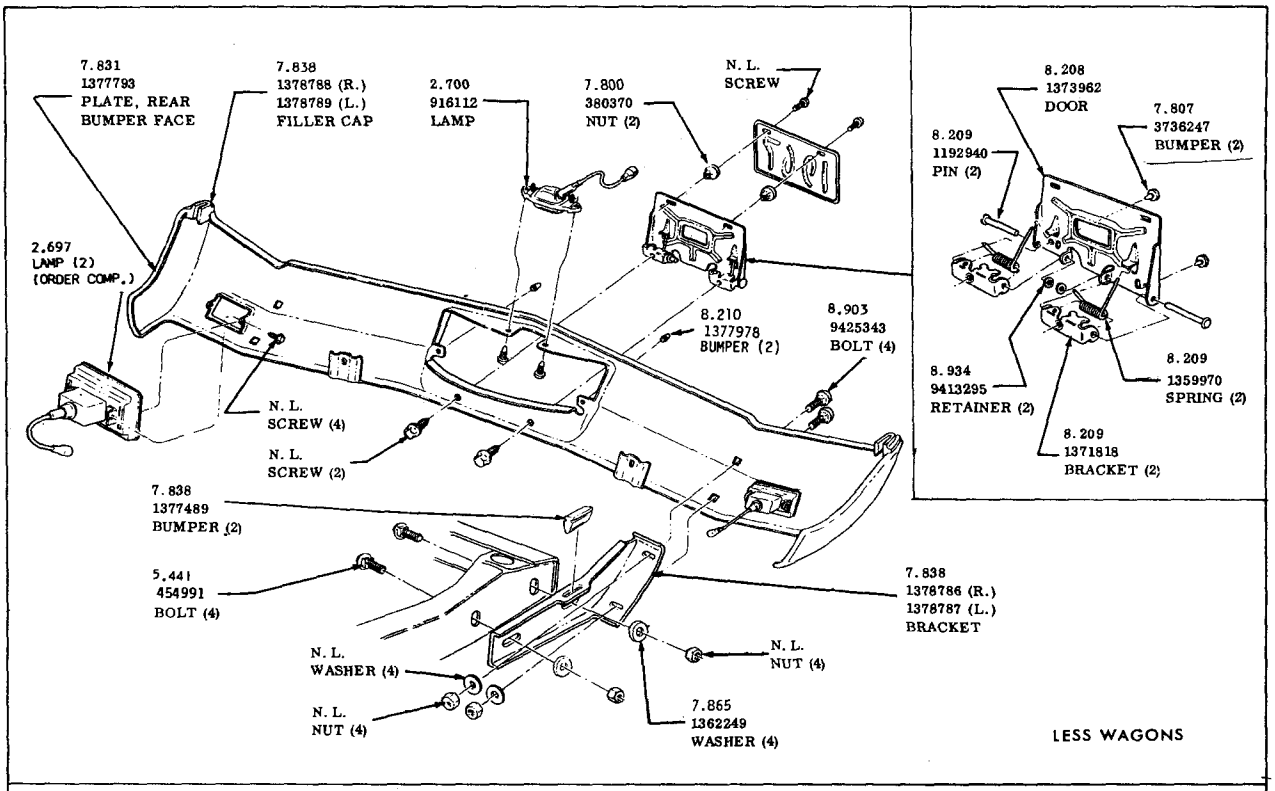

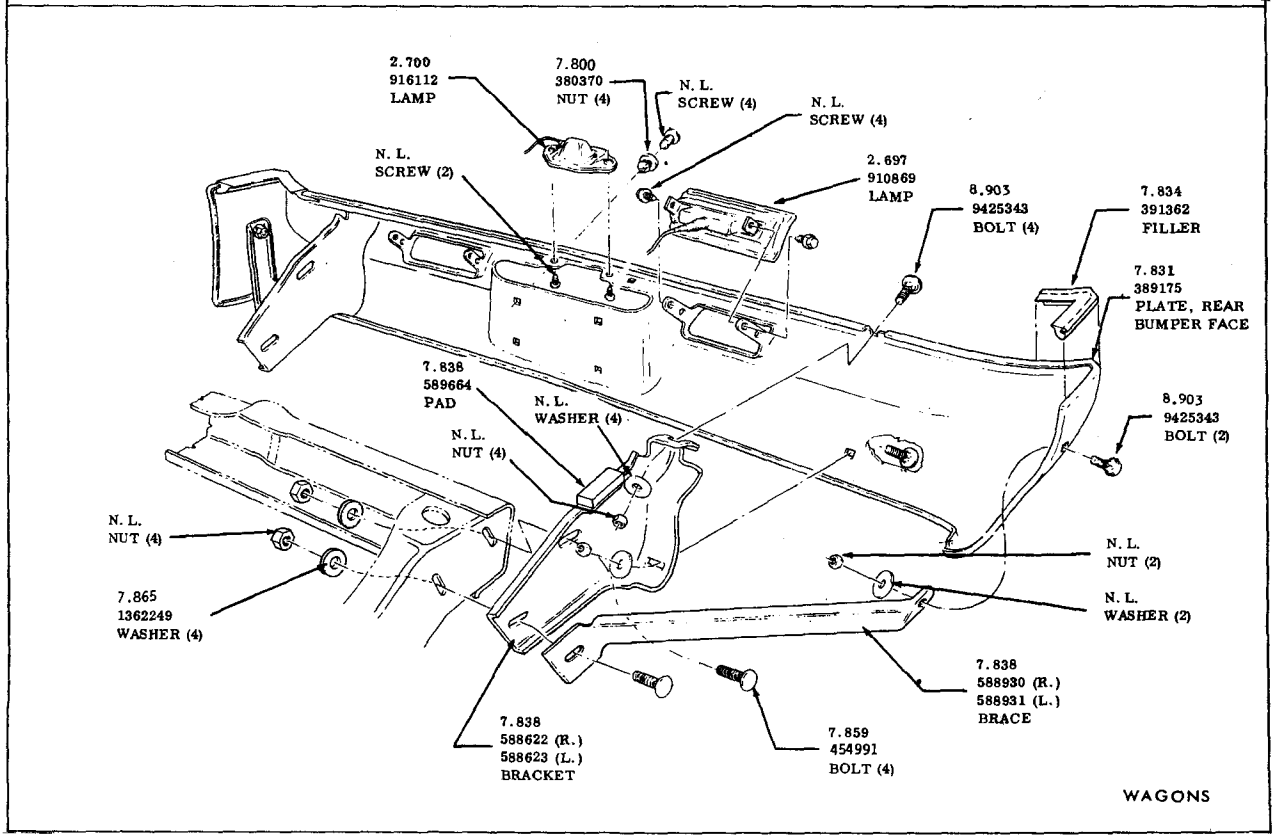

1967—SPECIAL—SKYLARK—SKYLARK G. S.

REAR BUMPERS

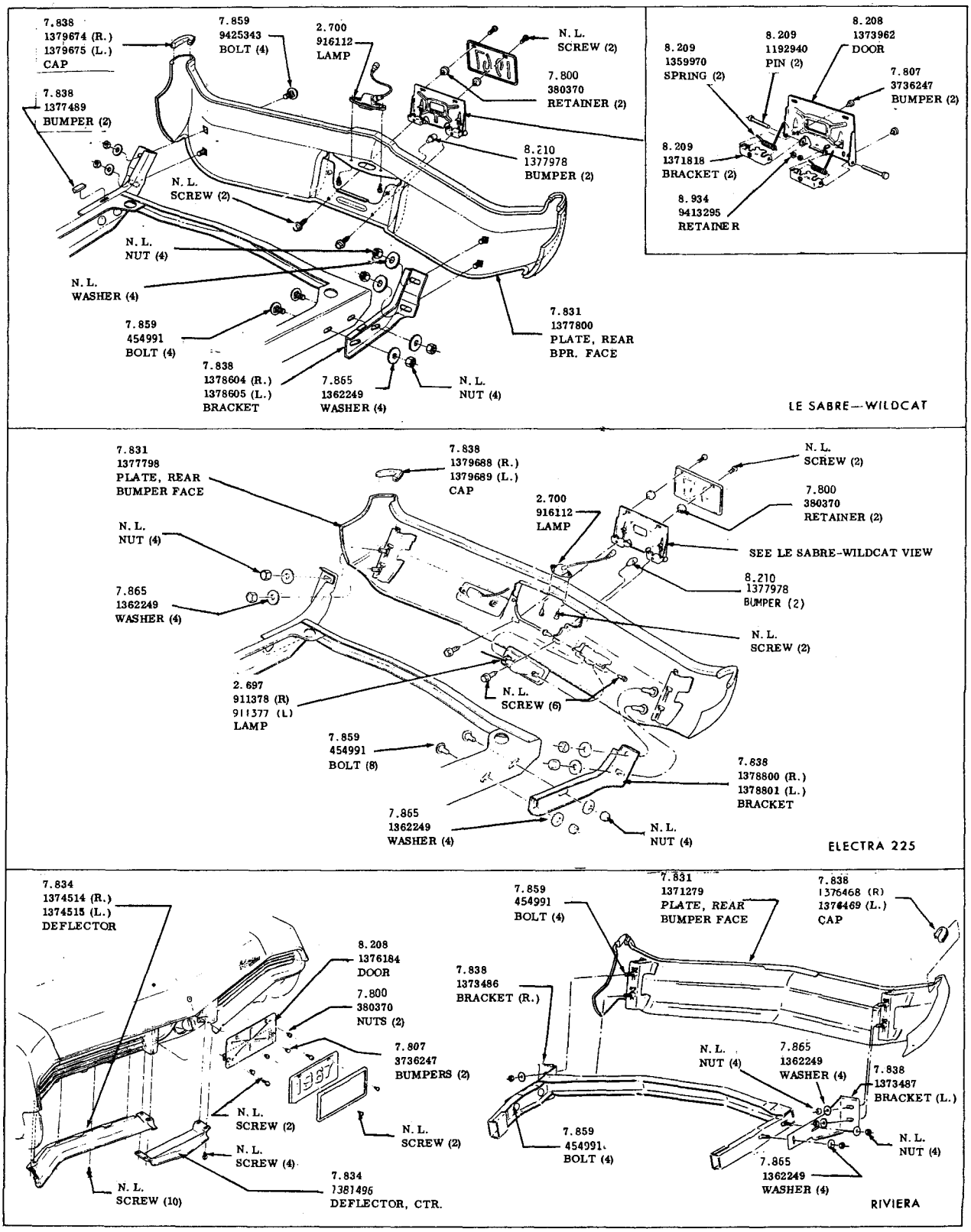

REAR BUMPERS

1967—LE SABRE— WILDCAT —ELECTRA—RIVIERA

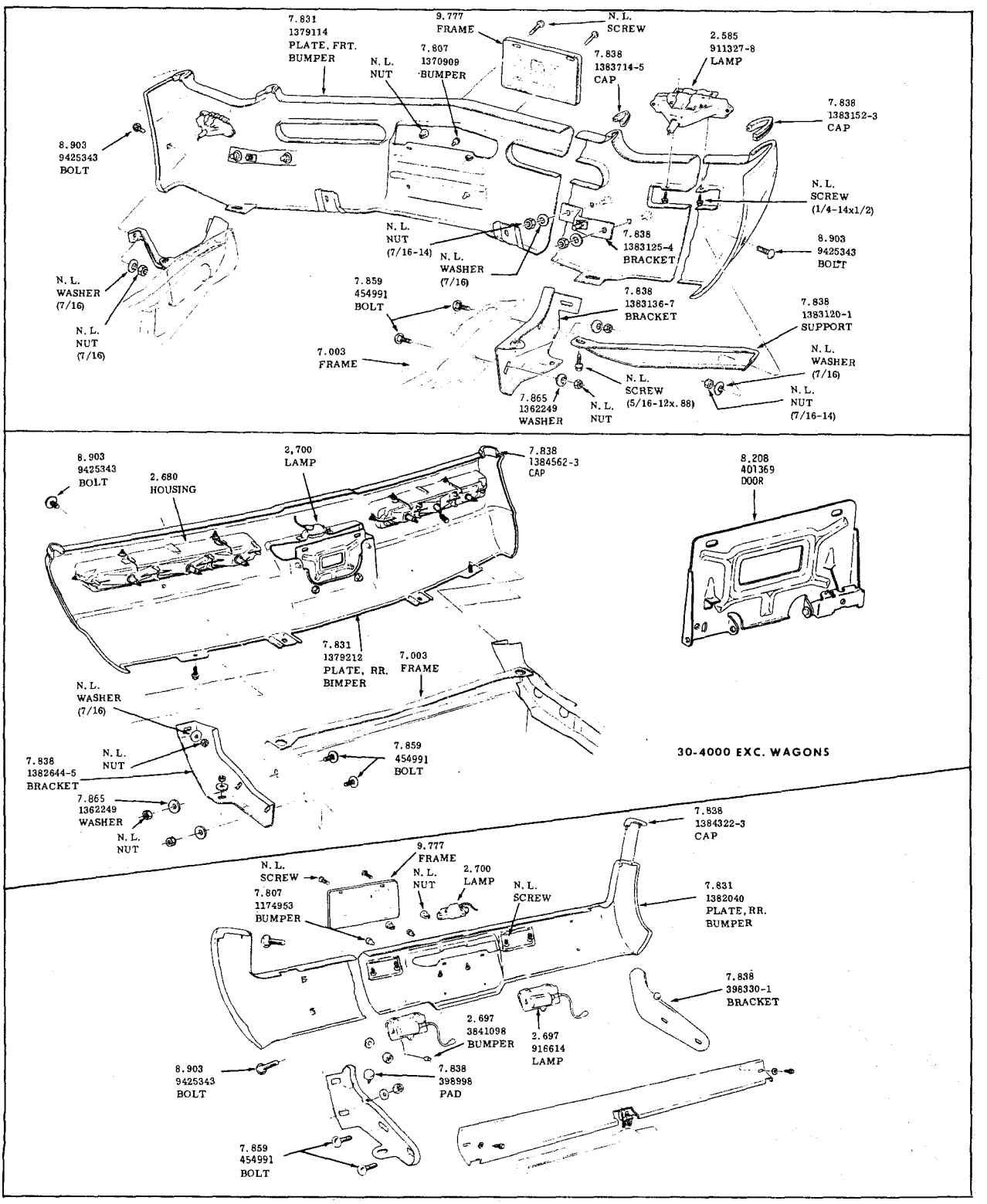

FRONT AND REAR BUMPER
1968-30-4000

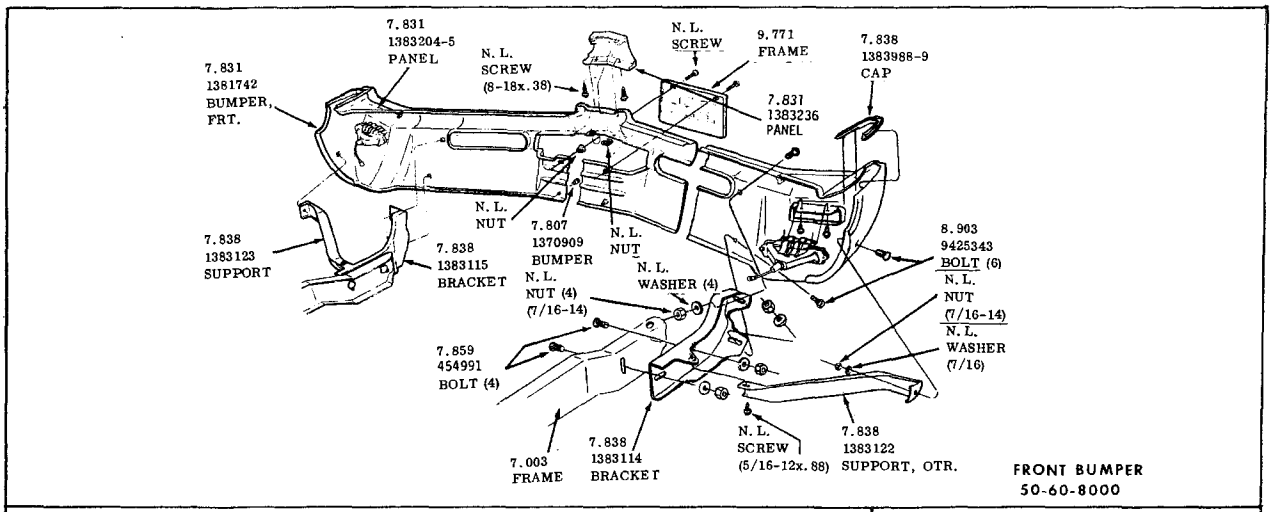

FRONT BUMPER
50-60-8000

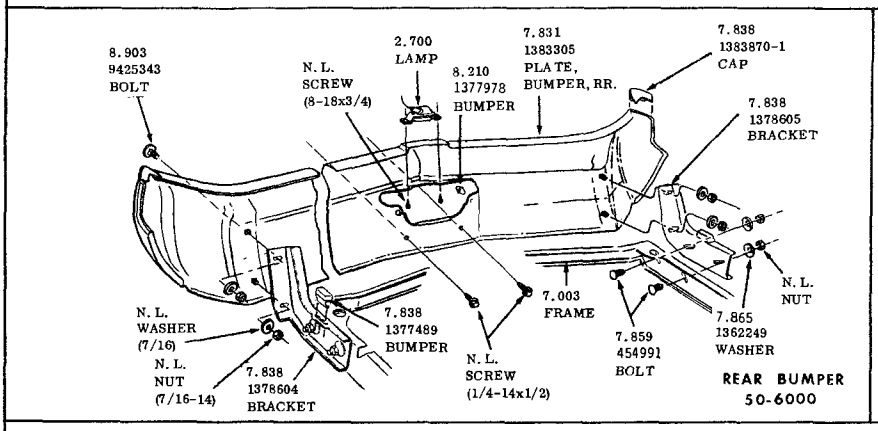

REAR BUMPER
50-6000

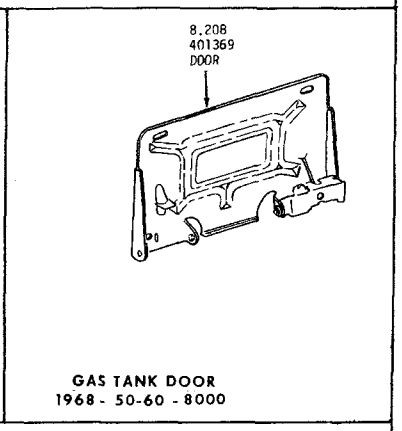

GAS TANK DOOR
1968 - 50-60 - 8000

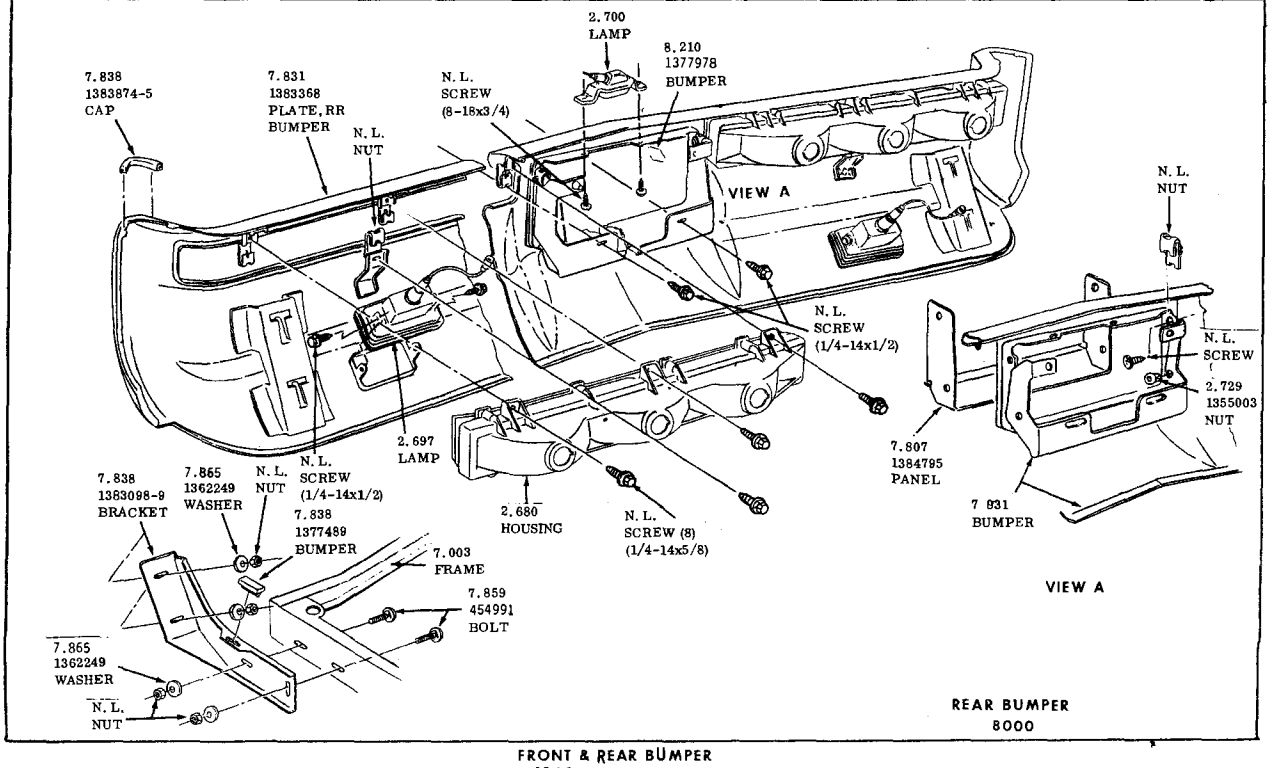

FRONT & REAR BUMPER
1968 - 50-60-8000

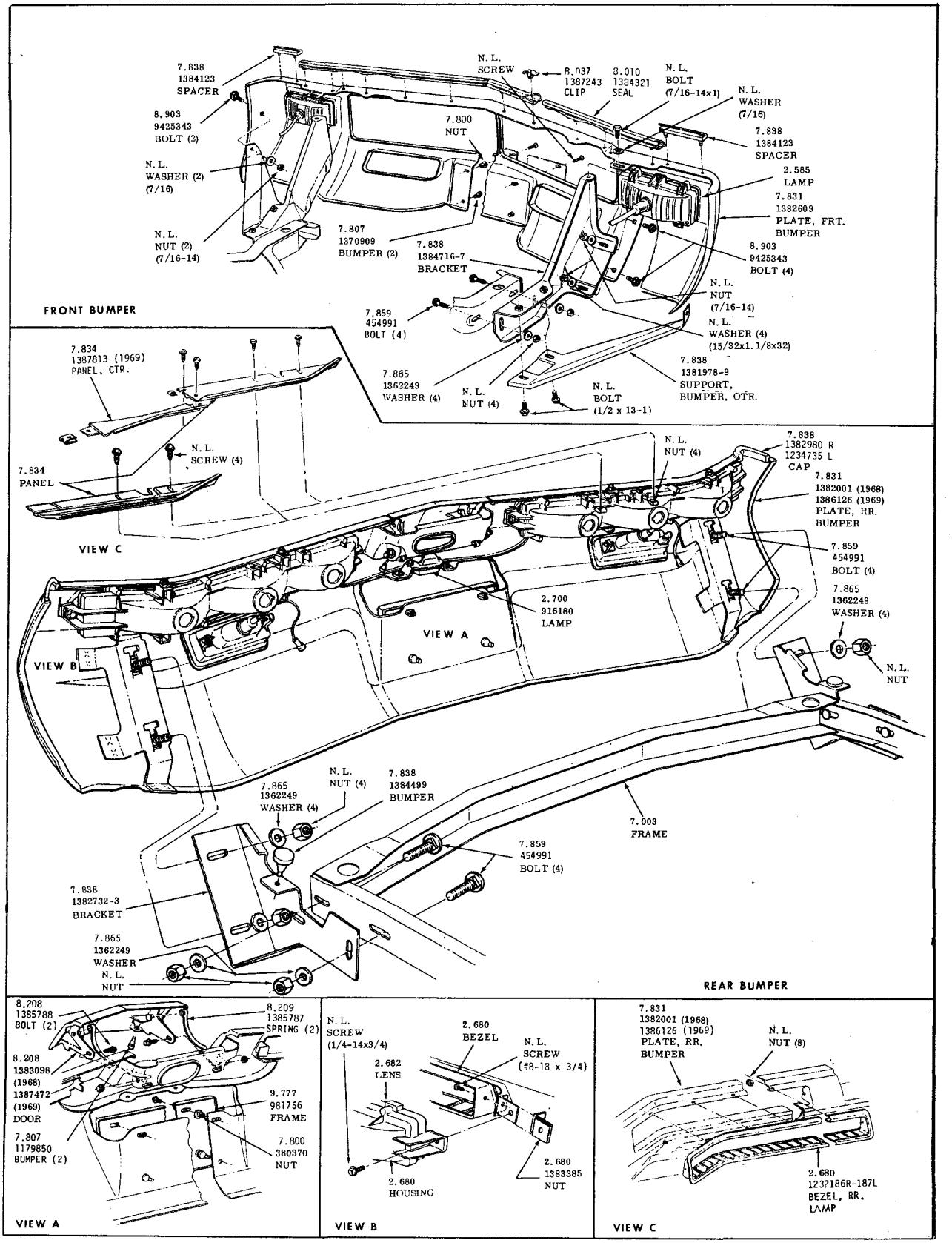

FRONT AND REAR BUMPER
1968-69-RIVIERA

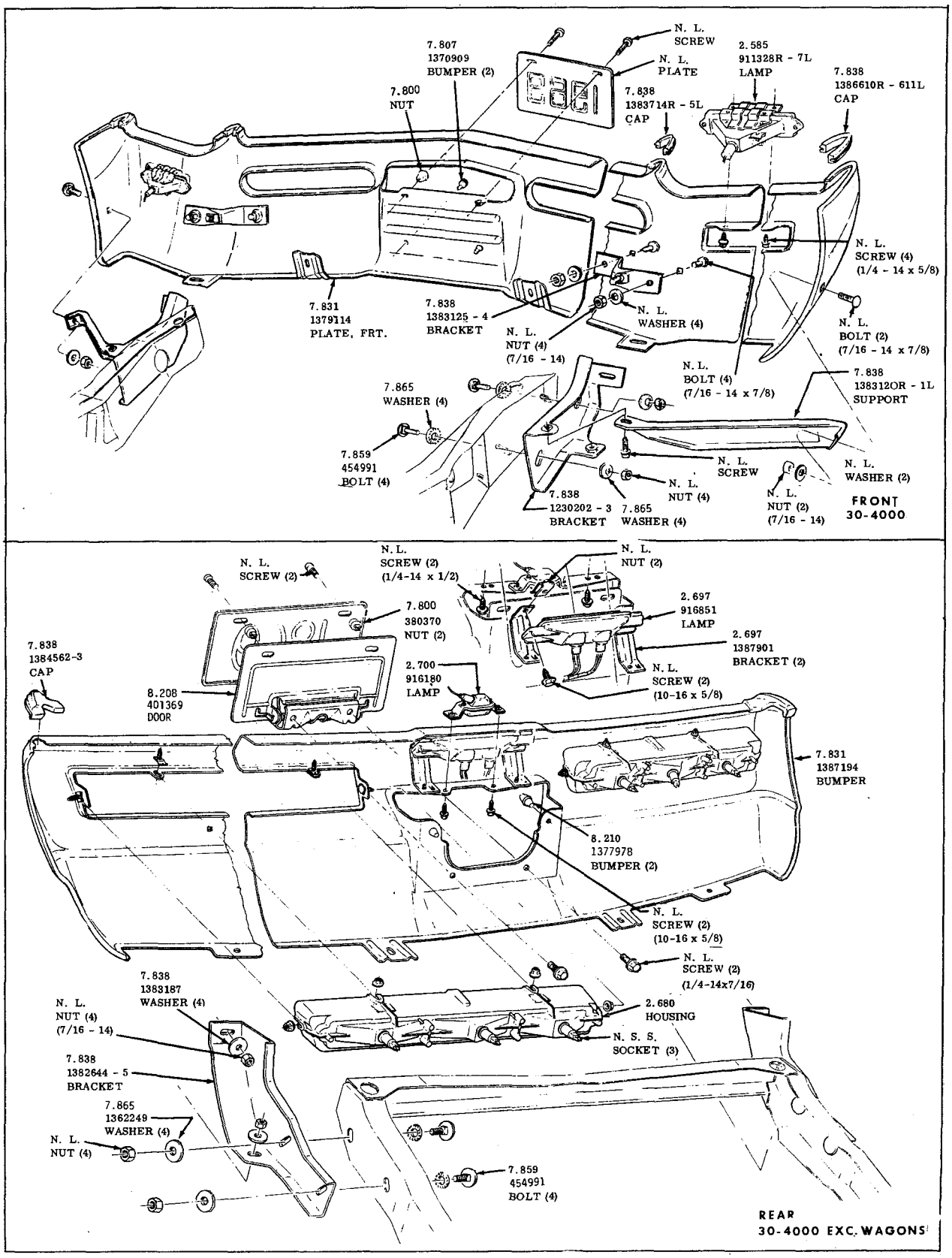

FRONT & REAR BUMPERS
1969-30-4000 EXC. WAGONS

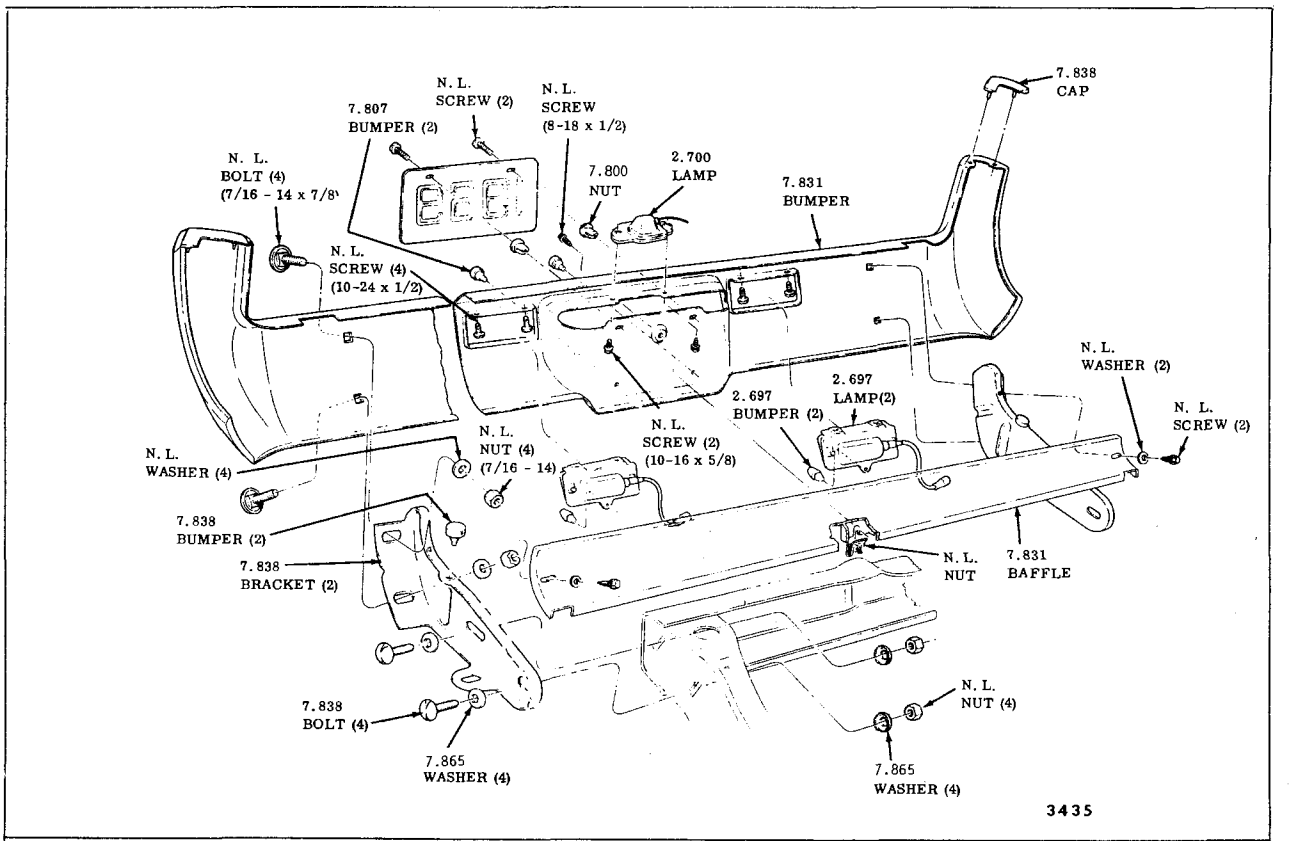

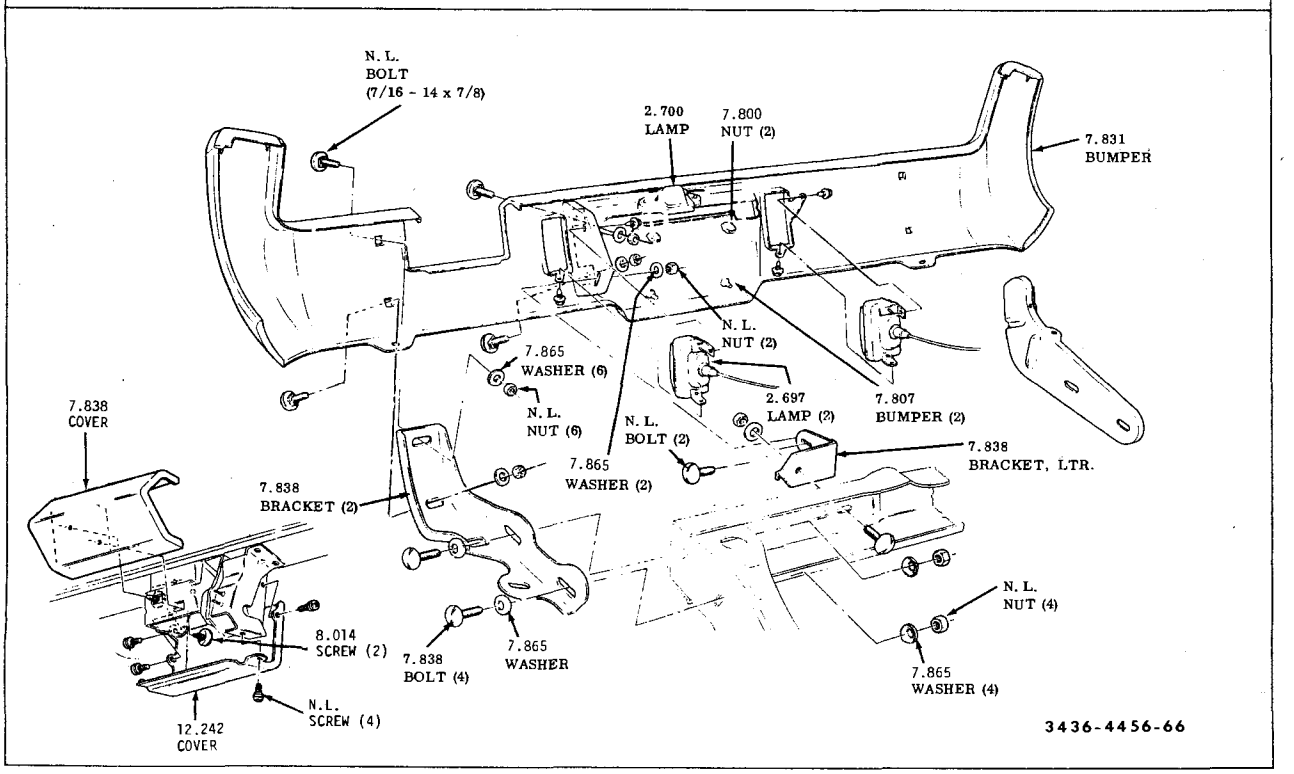

REAR BUMPERS
1969-1970 -30-4000 (WAGONS)

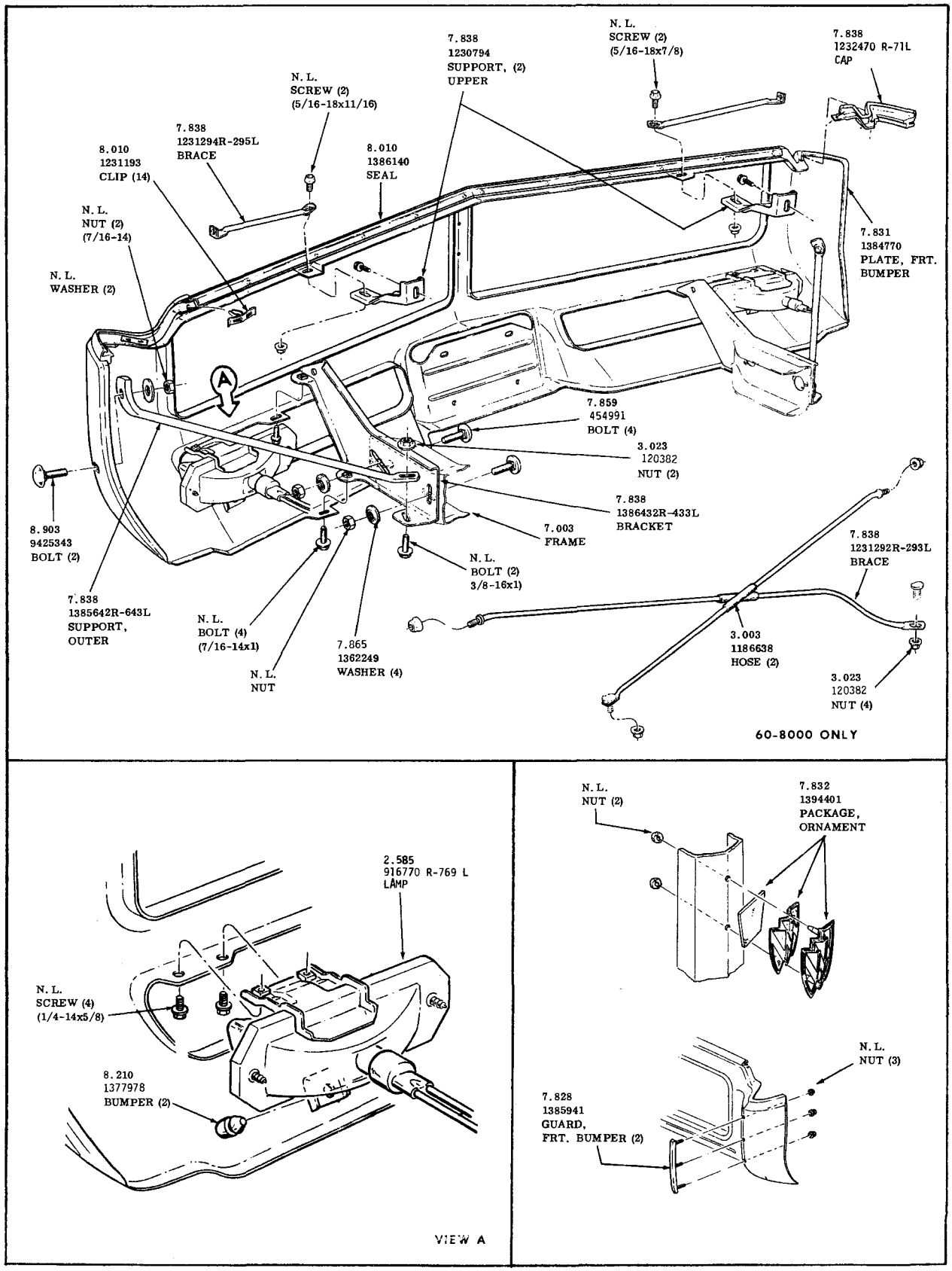

FRONT BUMPER

1969 50-60-8000

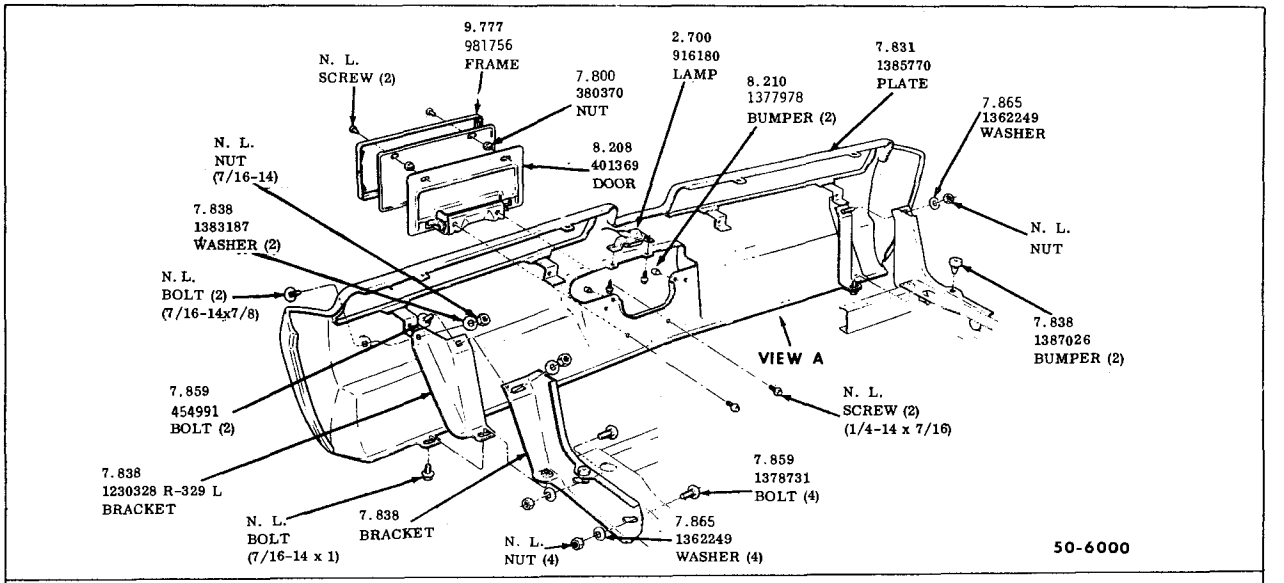

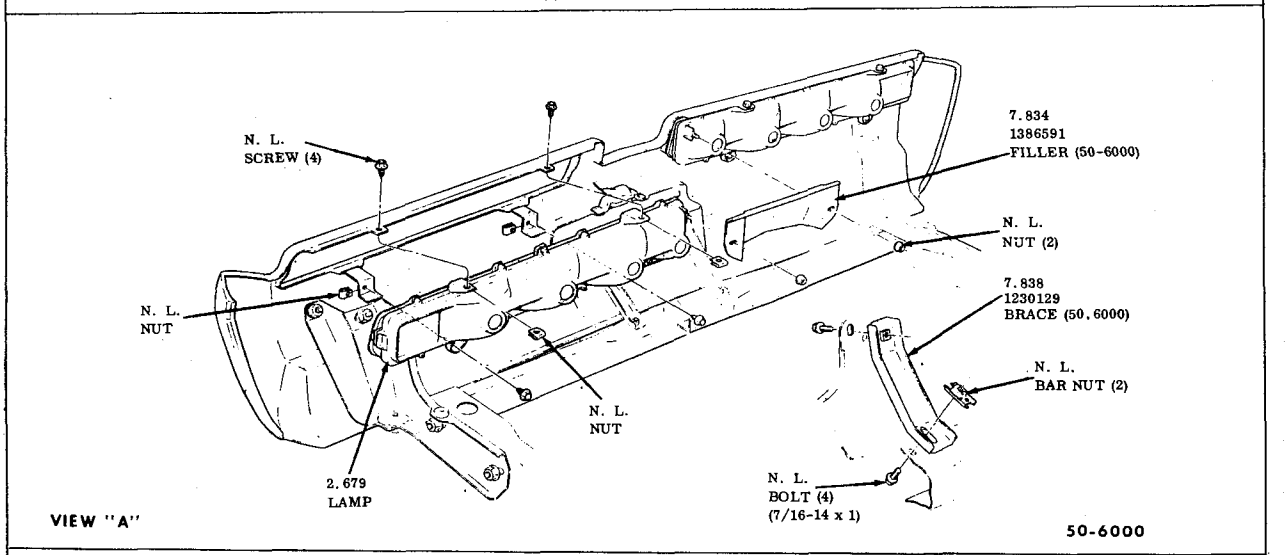

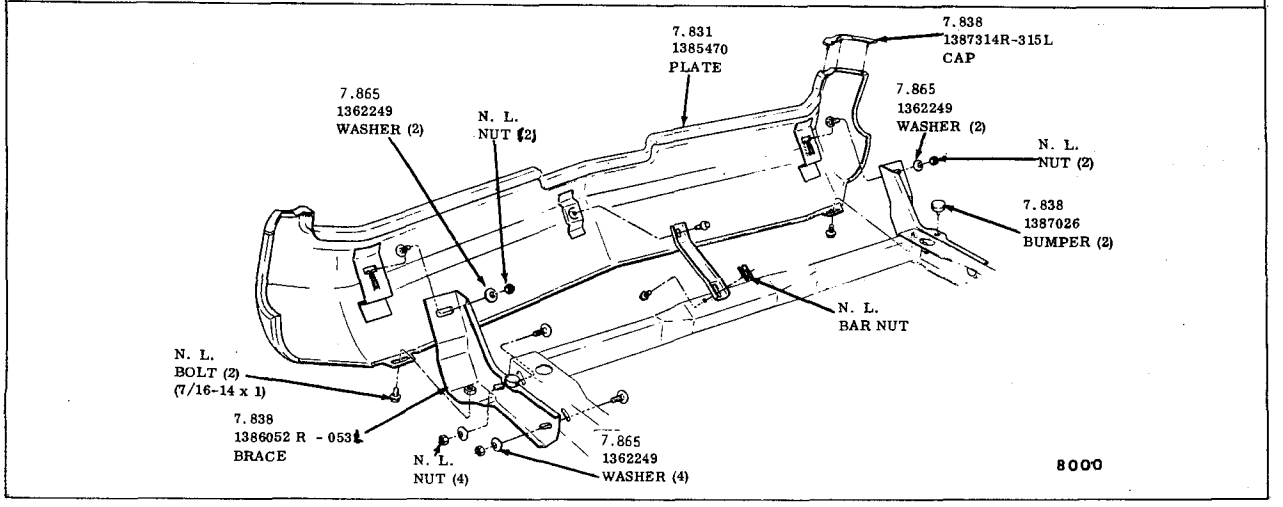

REAR BUMPER
1969-50-60-8000

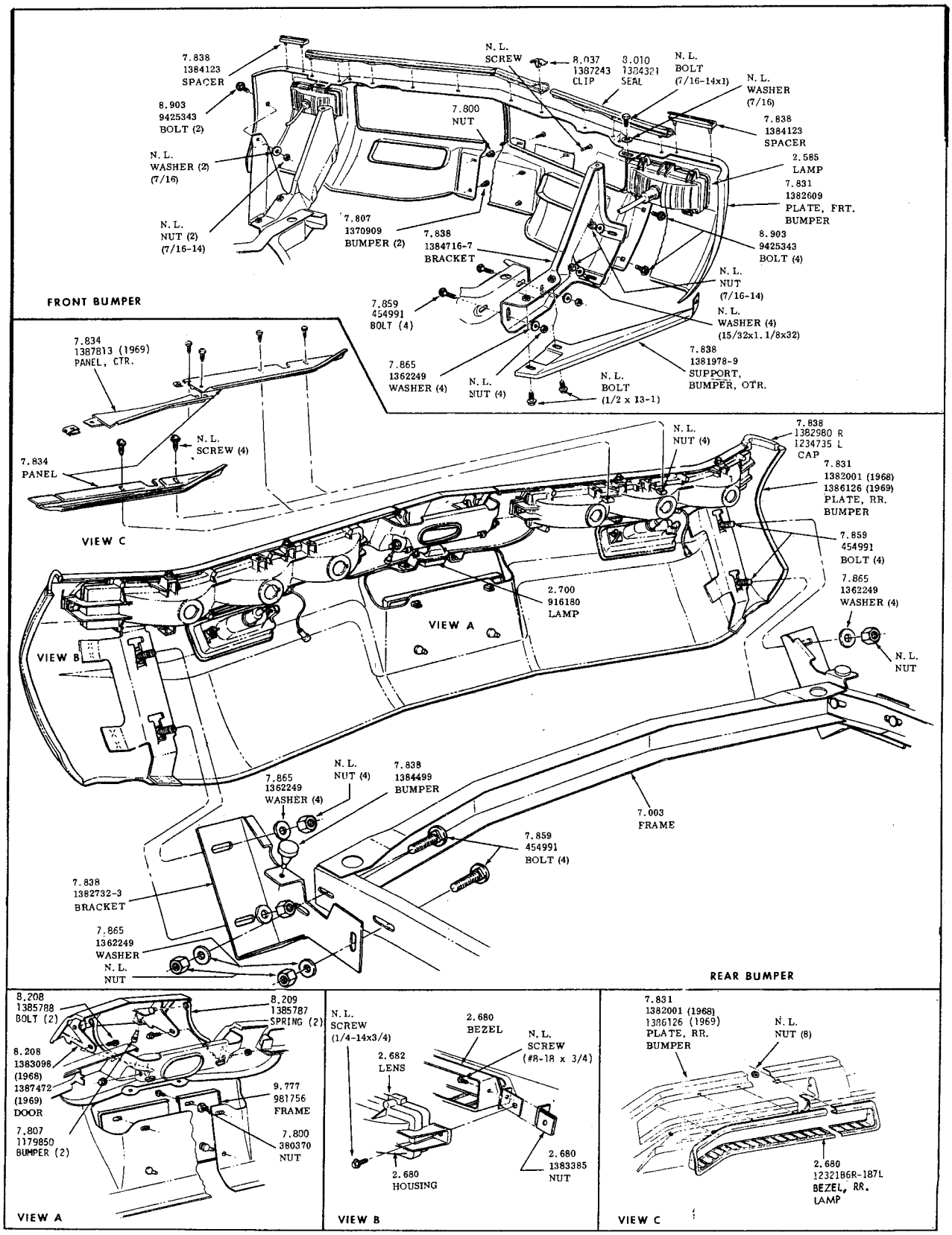

FRONT AND REAR BUMPER
1968-69 -RIVIERA

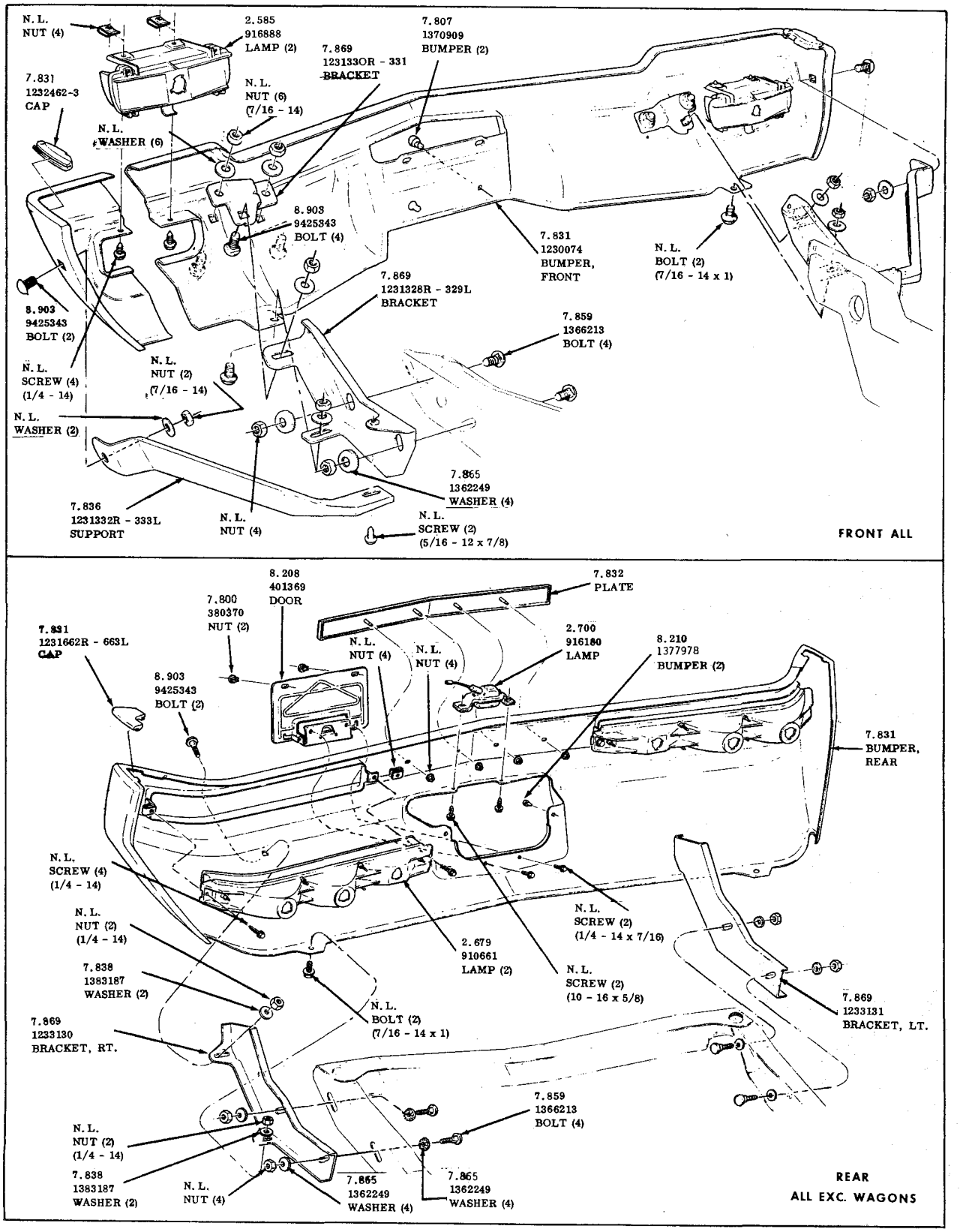

FRONT & REAR BUMPERS
1970-30-4000 EXC. WAGONS

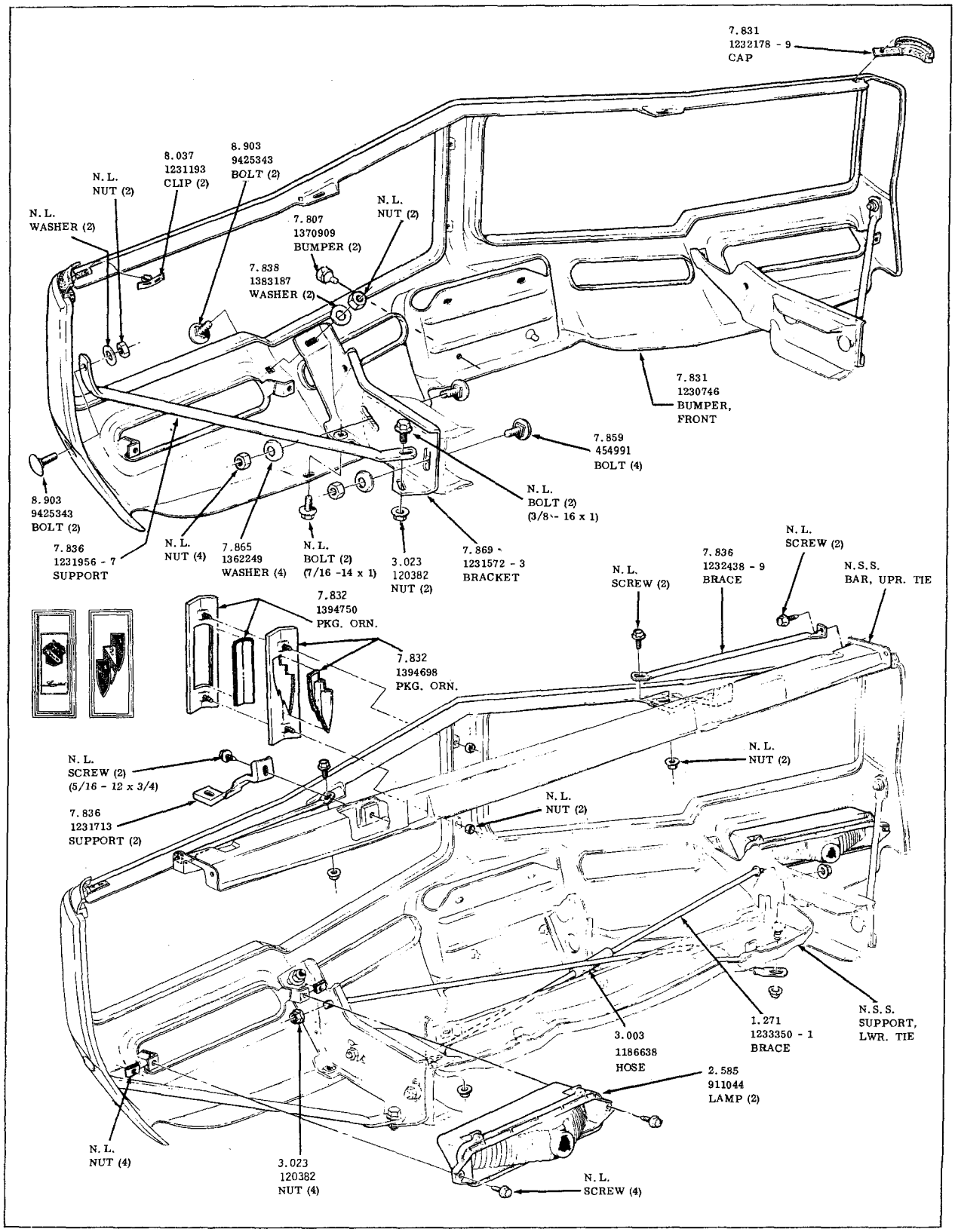

FRONT BUMPER
1970-50-60-8000

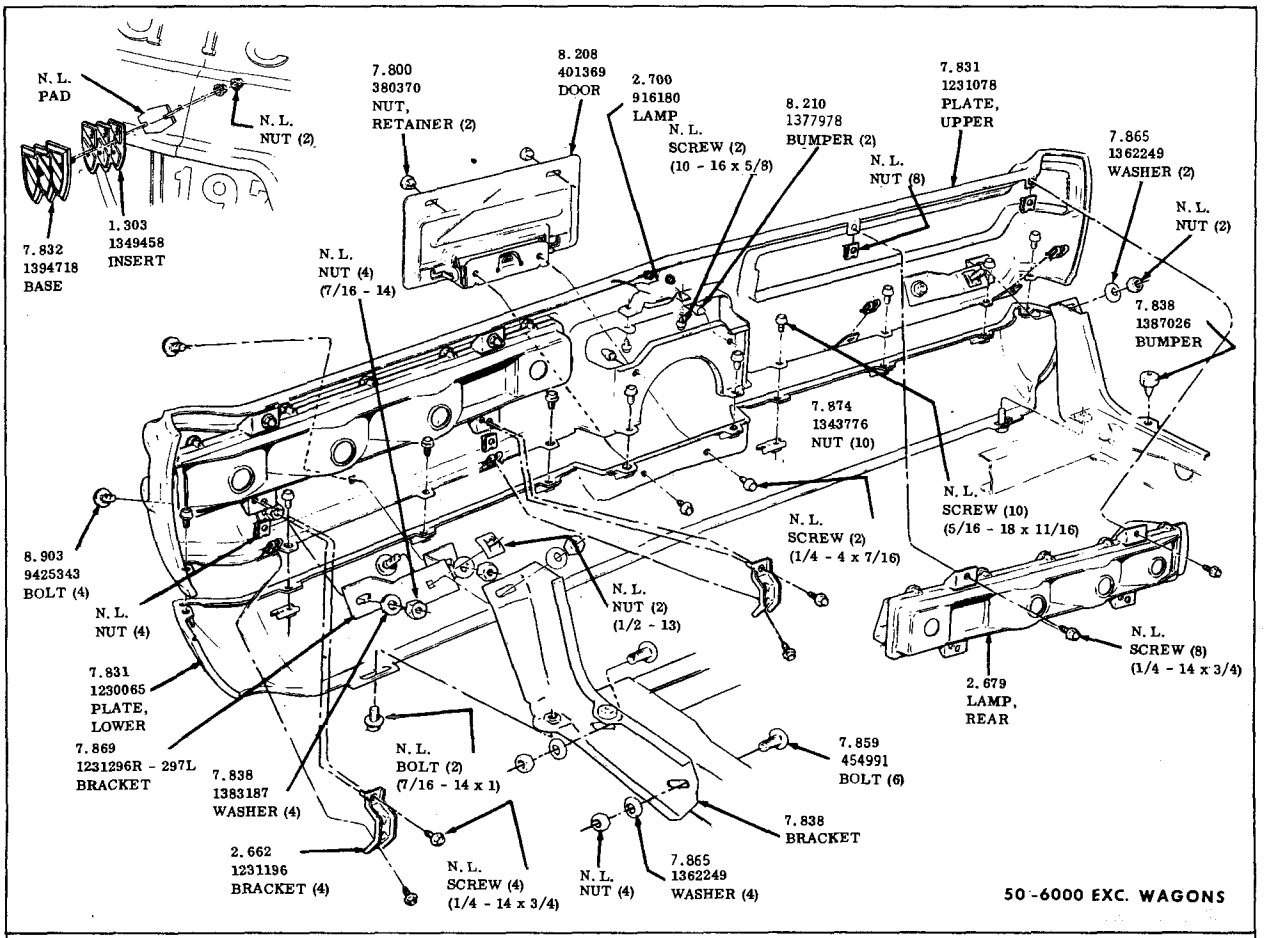

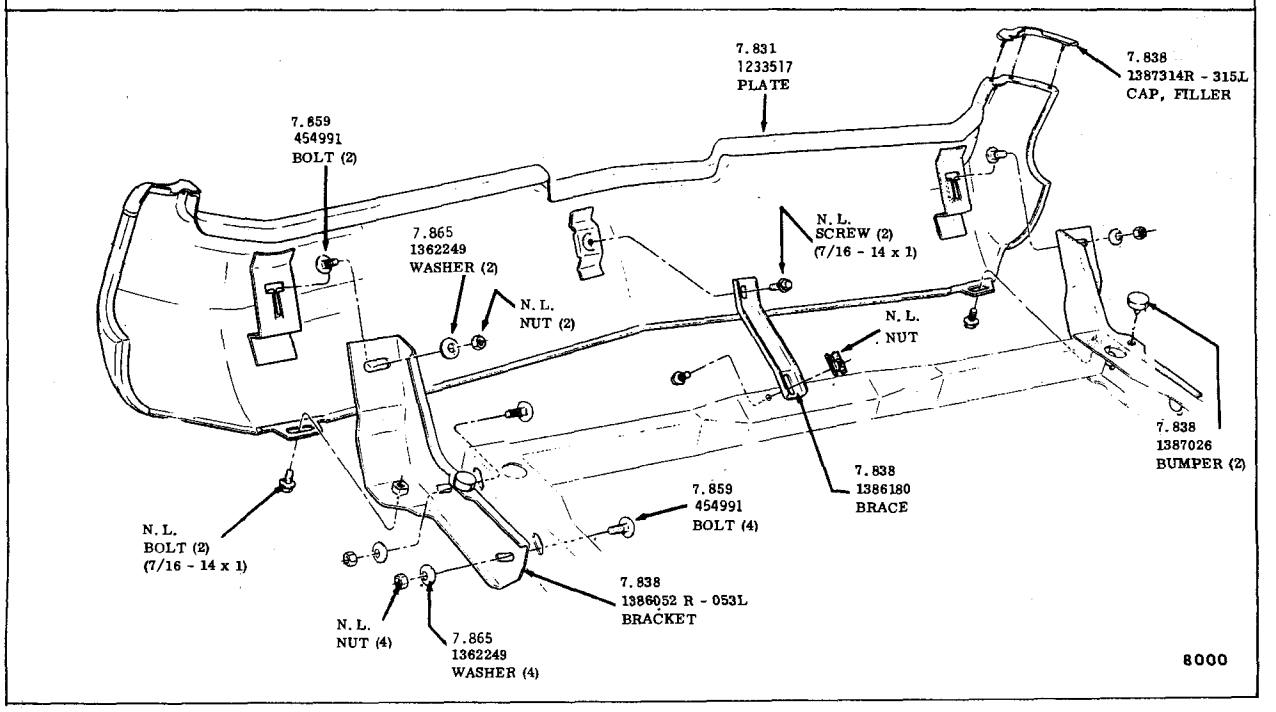

REAR BUMPERS

1970-50-60-8000

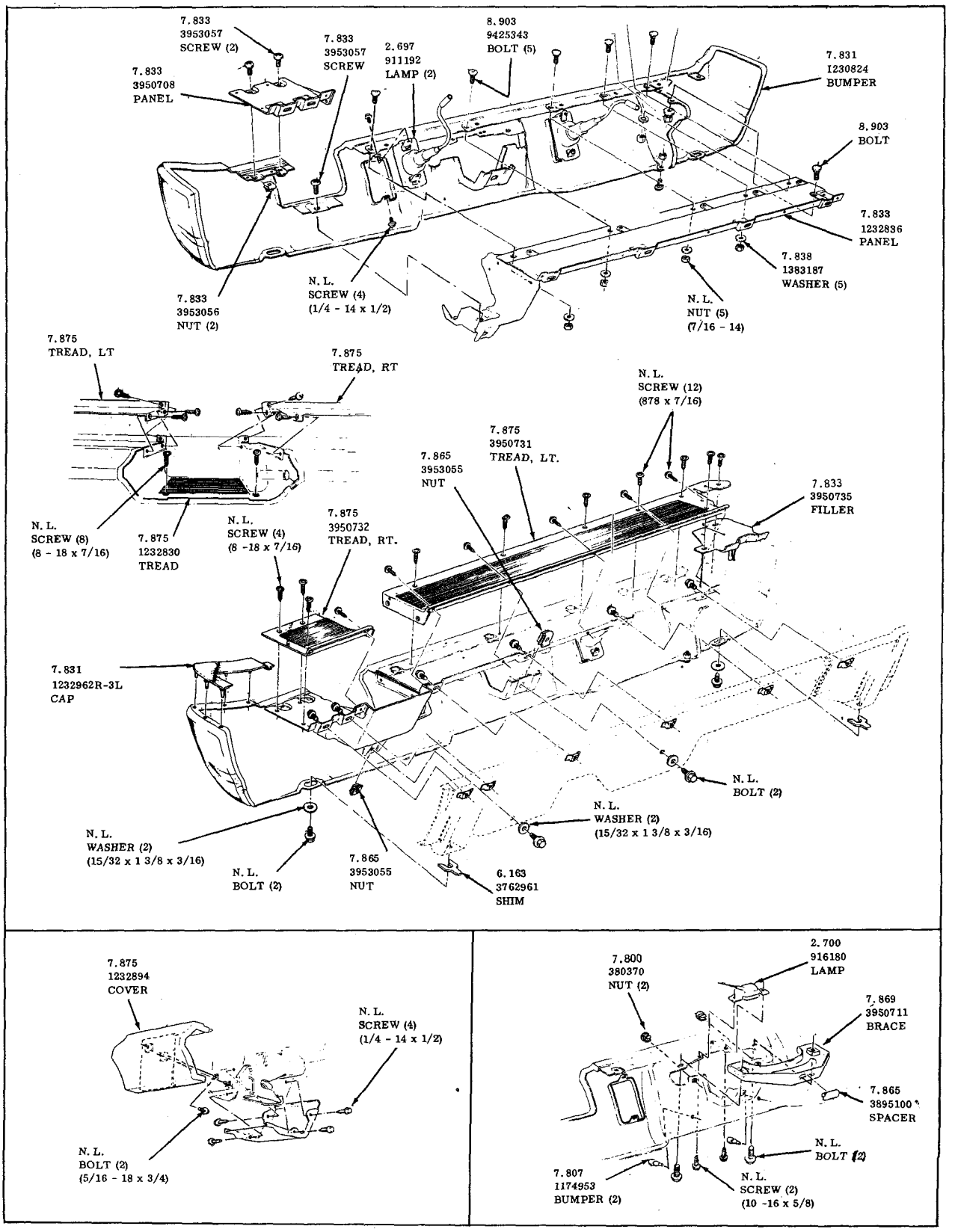

REAR BUMPER
1970-6000 WAGONS

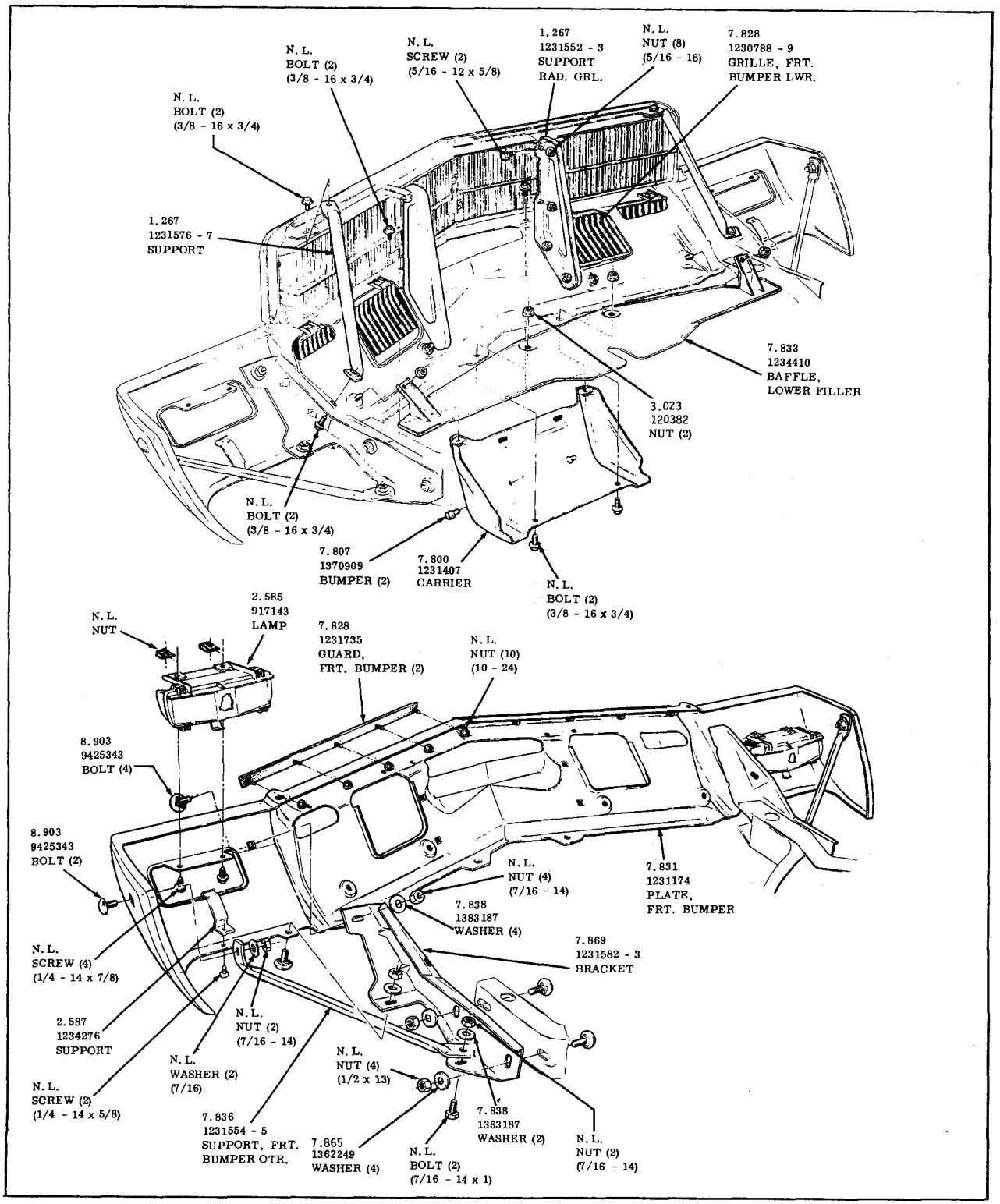

FRONT BUMPER
1970-9000

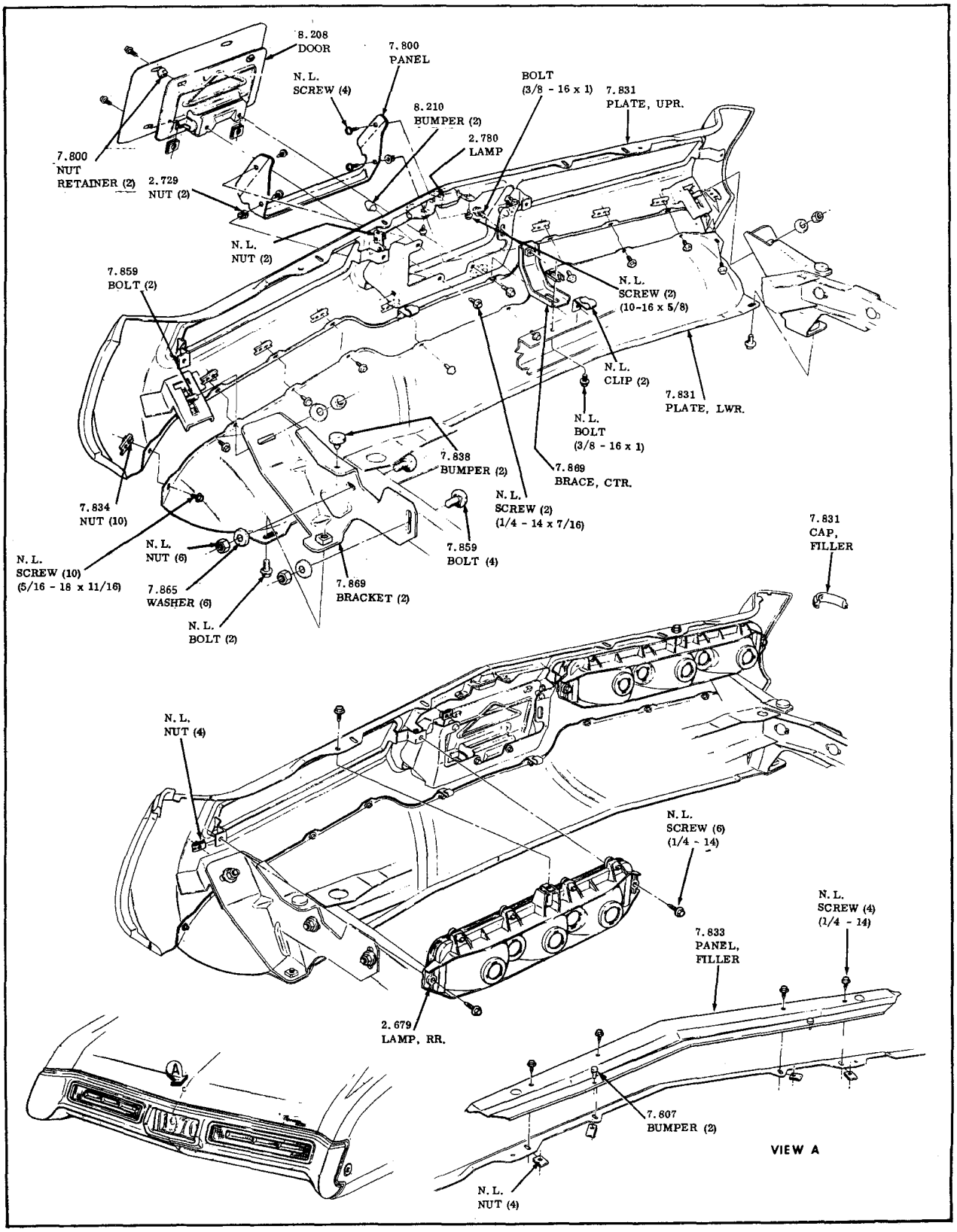

REAR BUMPER
1970-9000

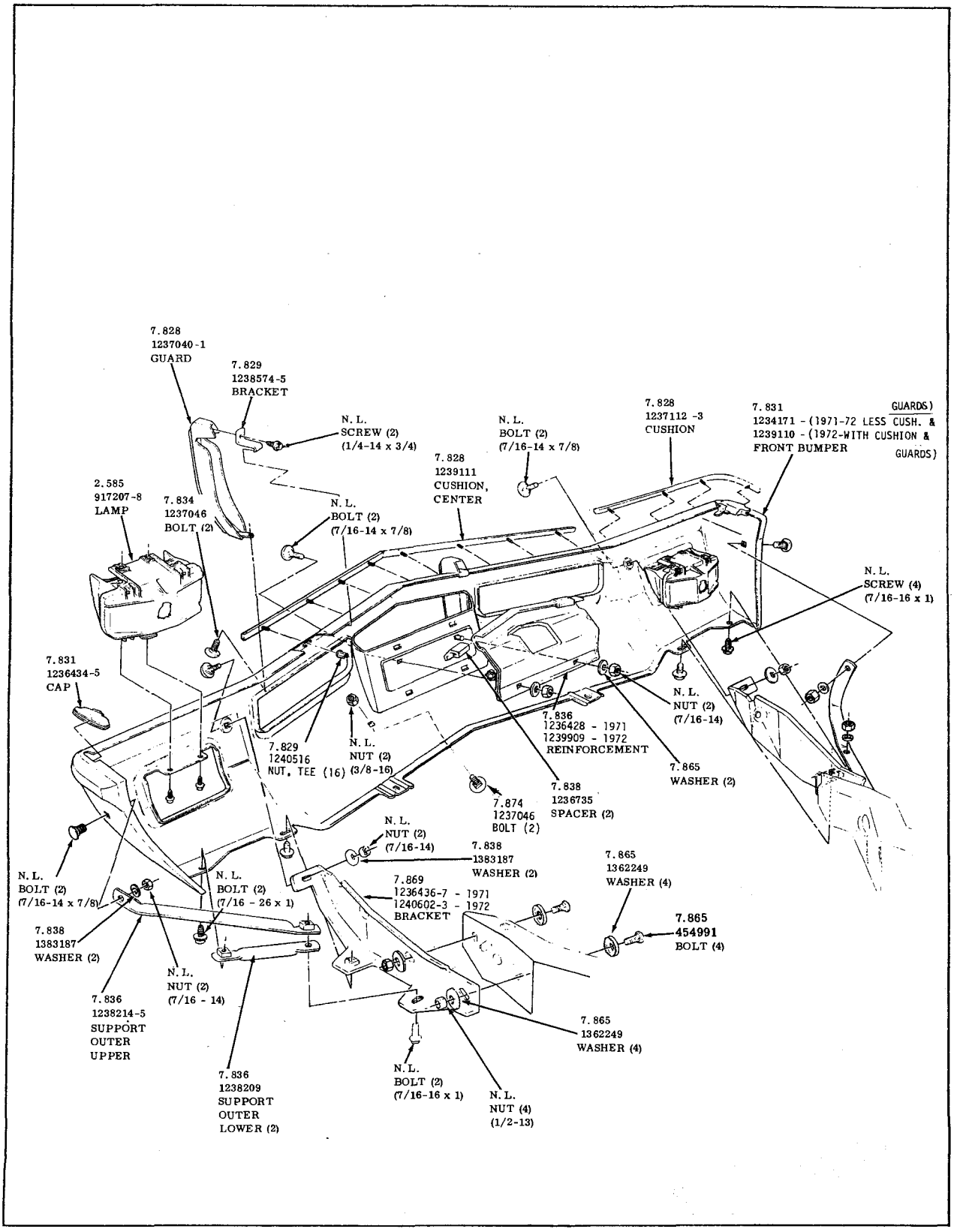

FRONT BUMPER

1971 - 1972 -30-4000

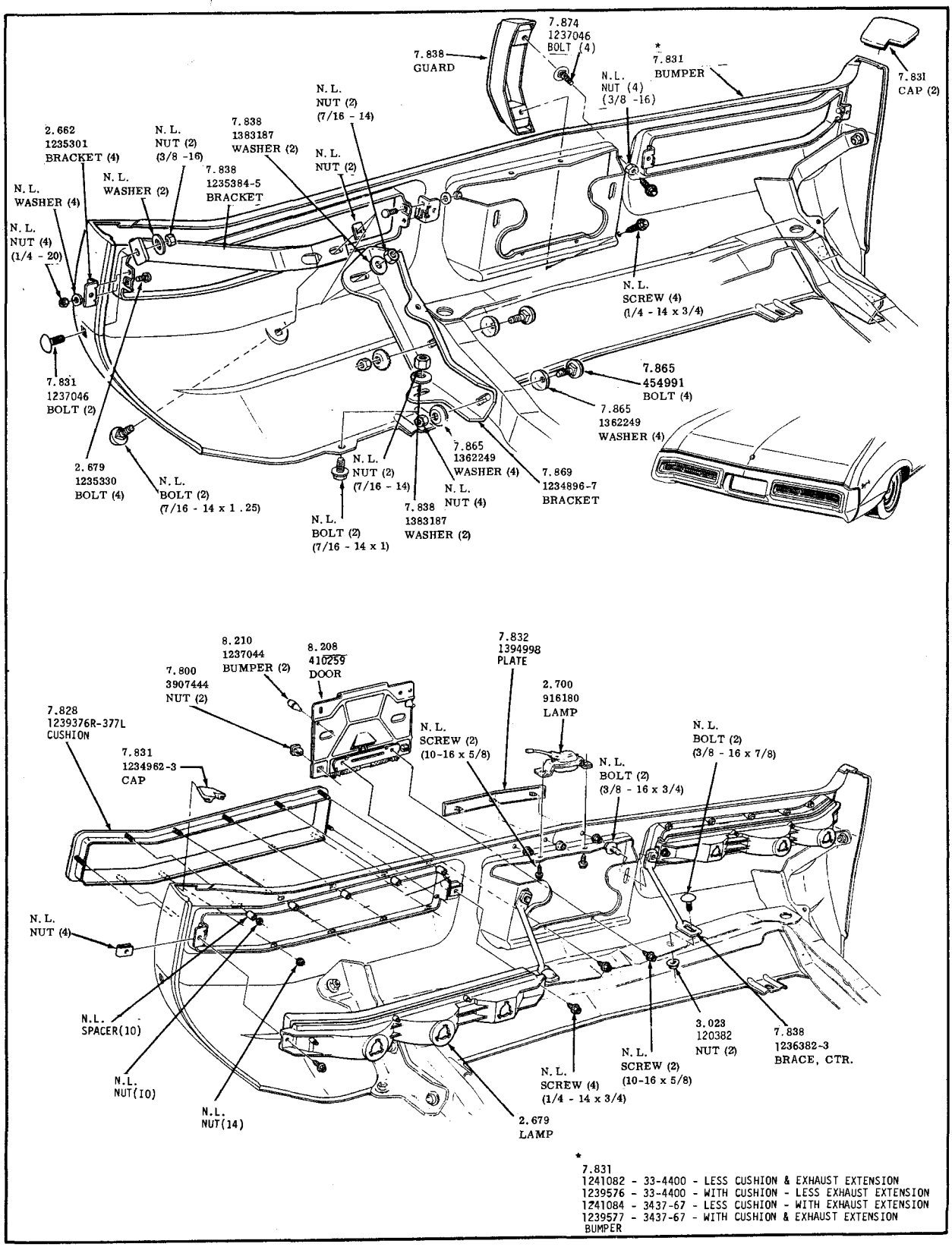

REAR BUMPER
1971-1972 30-4000 EXC. WAGON

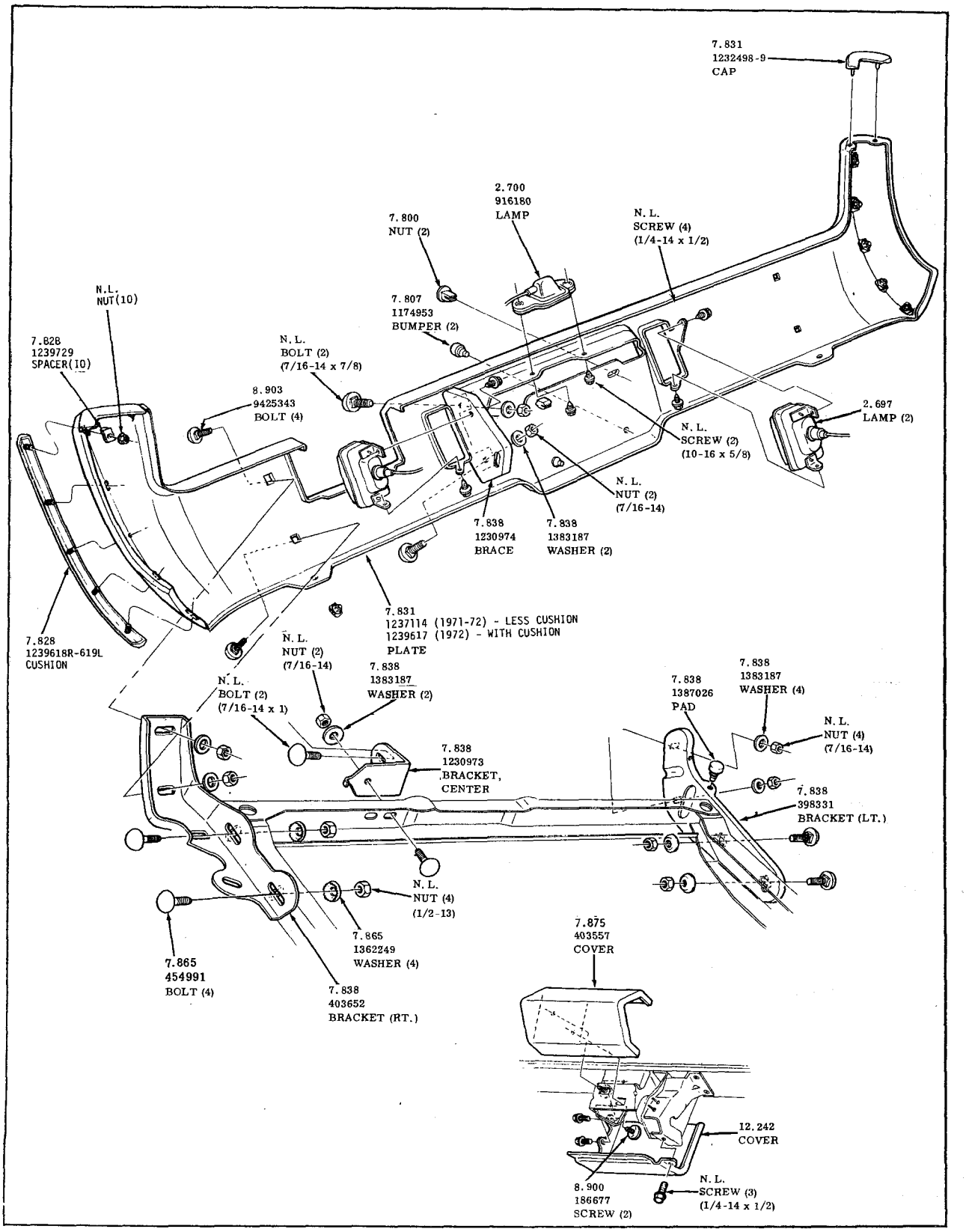

REAR BUMPER

1971 - 1972 - 3436

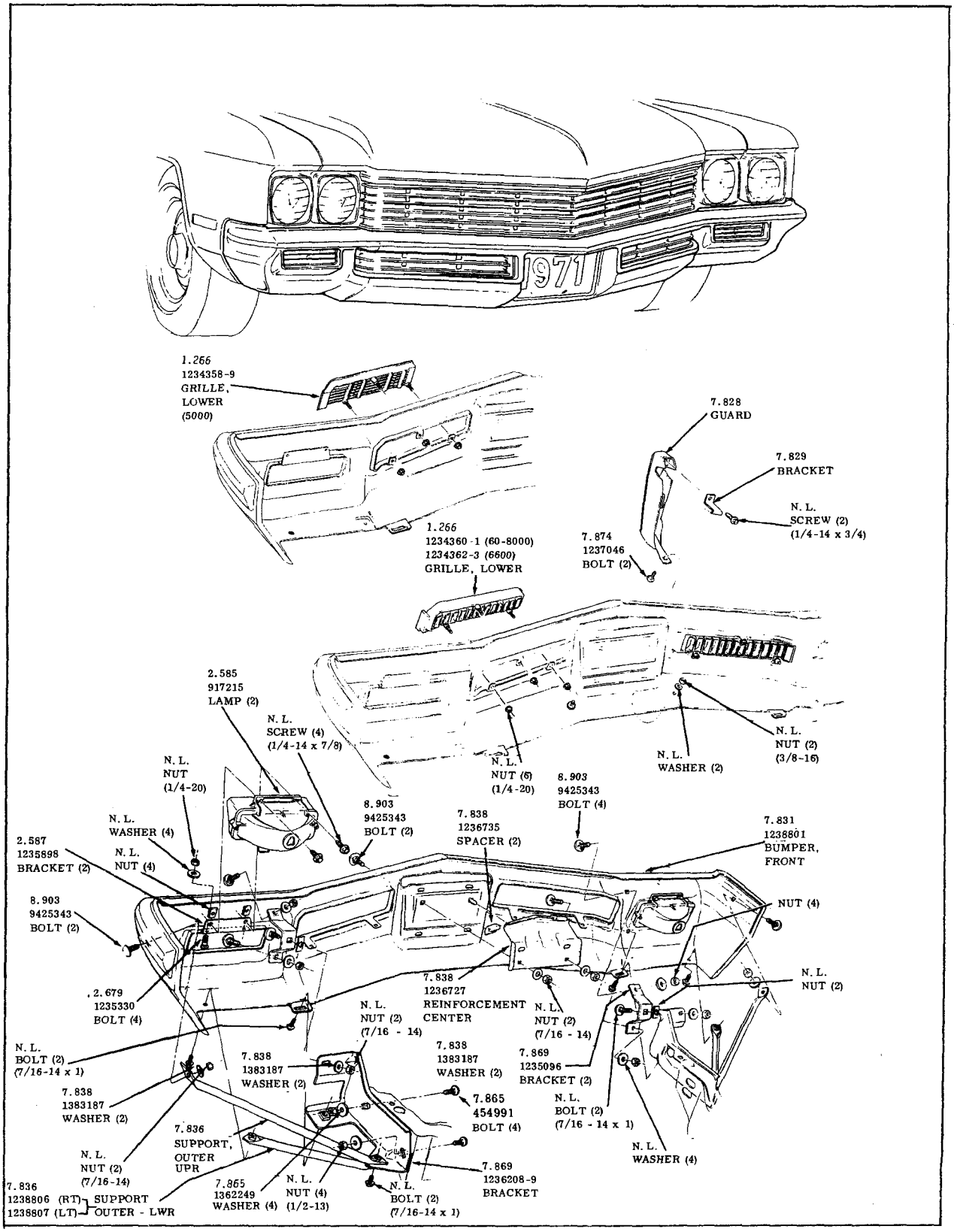

FRONT BUMPER

1971-50-66-8000

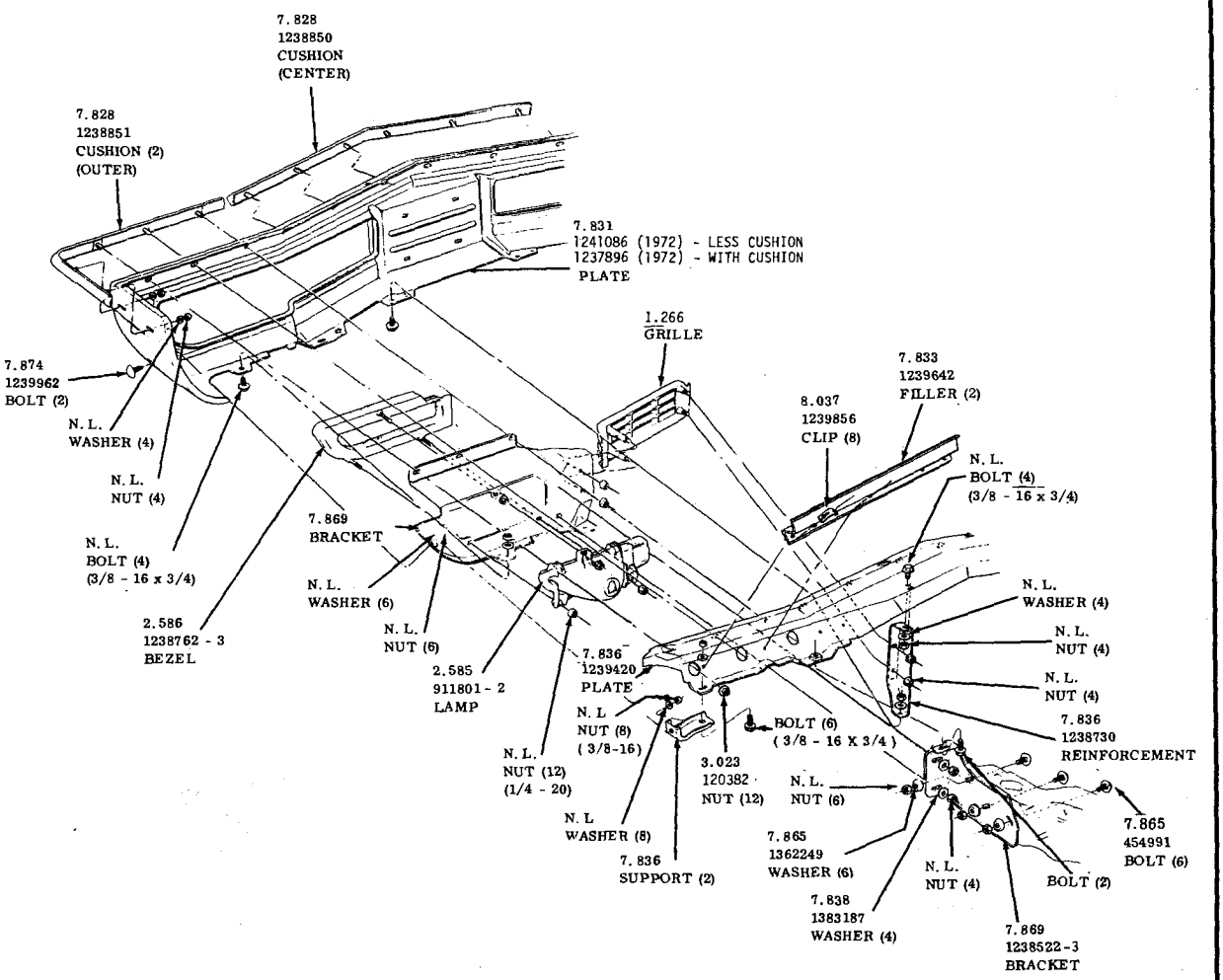

FRONT BUMPER

1972- 50-60-8000

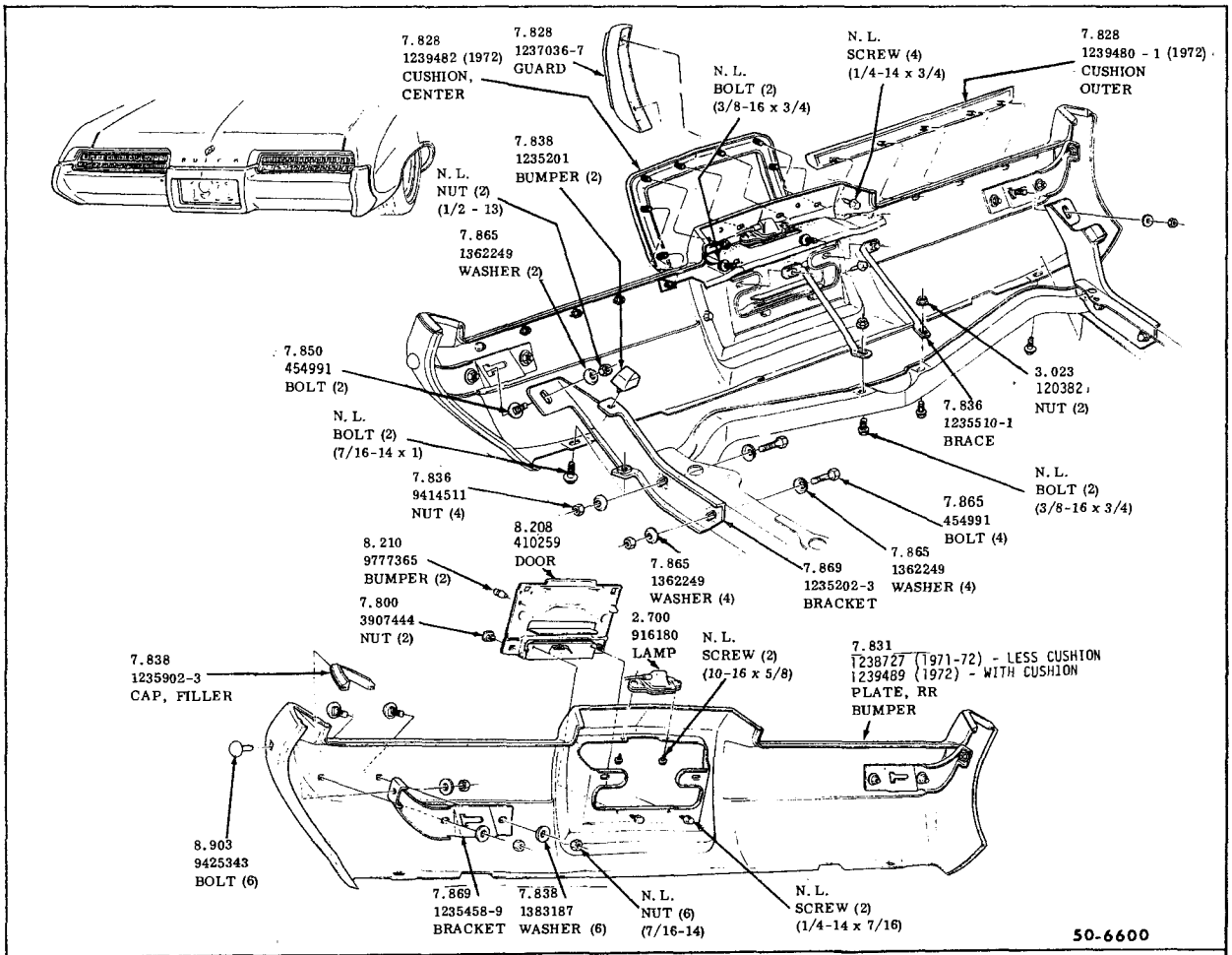

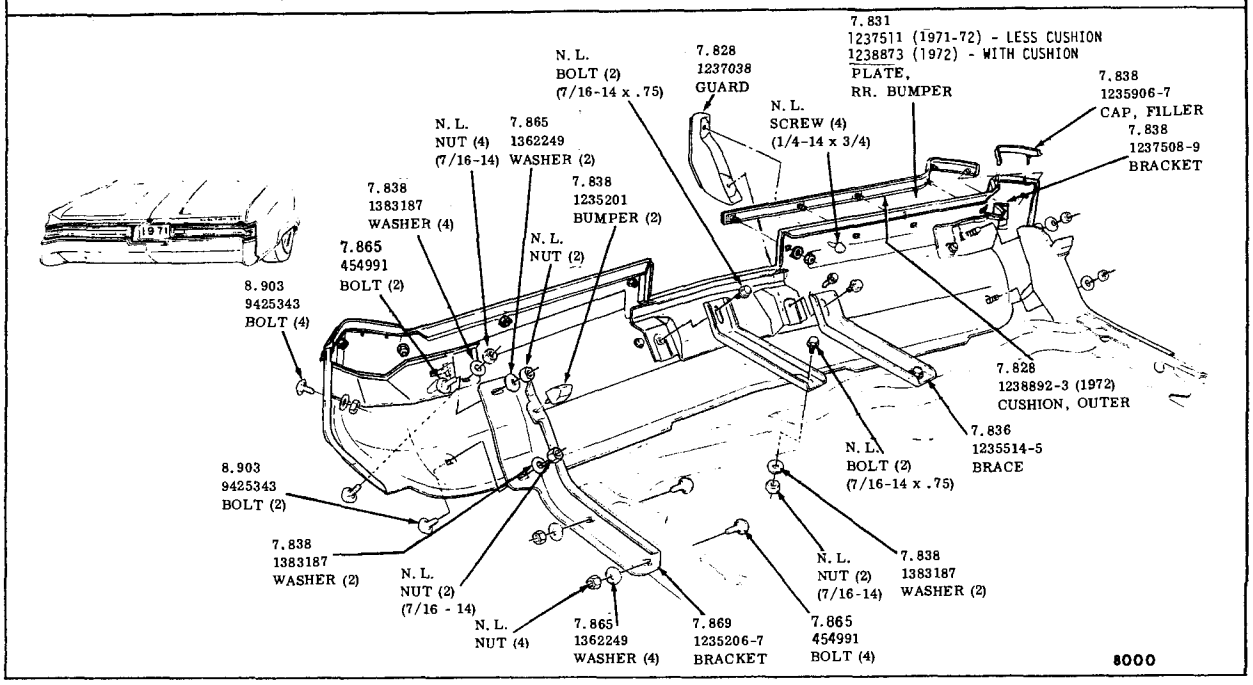

REAR BUMPER

1971-1972 - 50-66-8000

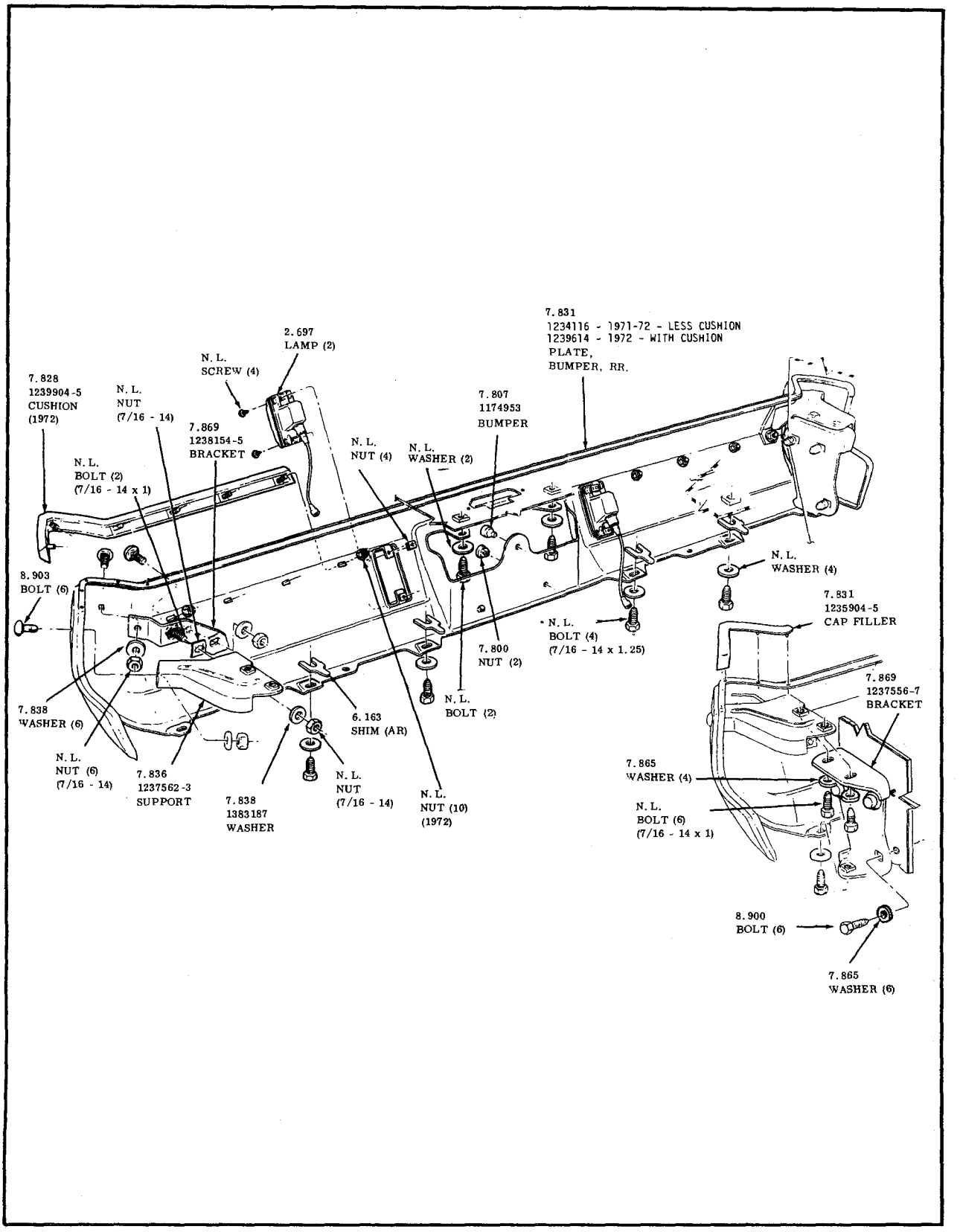

REAR BUMPER

1971-1972 6035-45

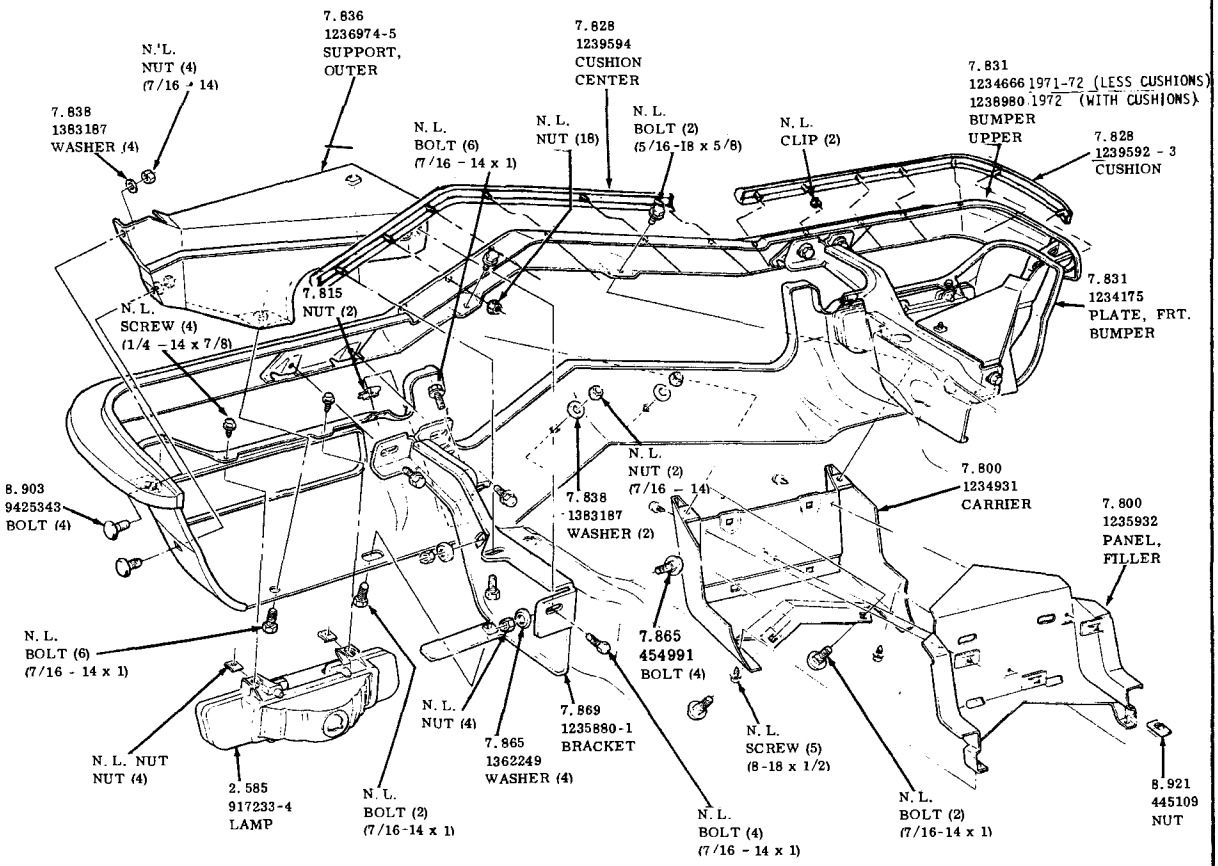

FRONT BUMPER
1971-1972 -9000

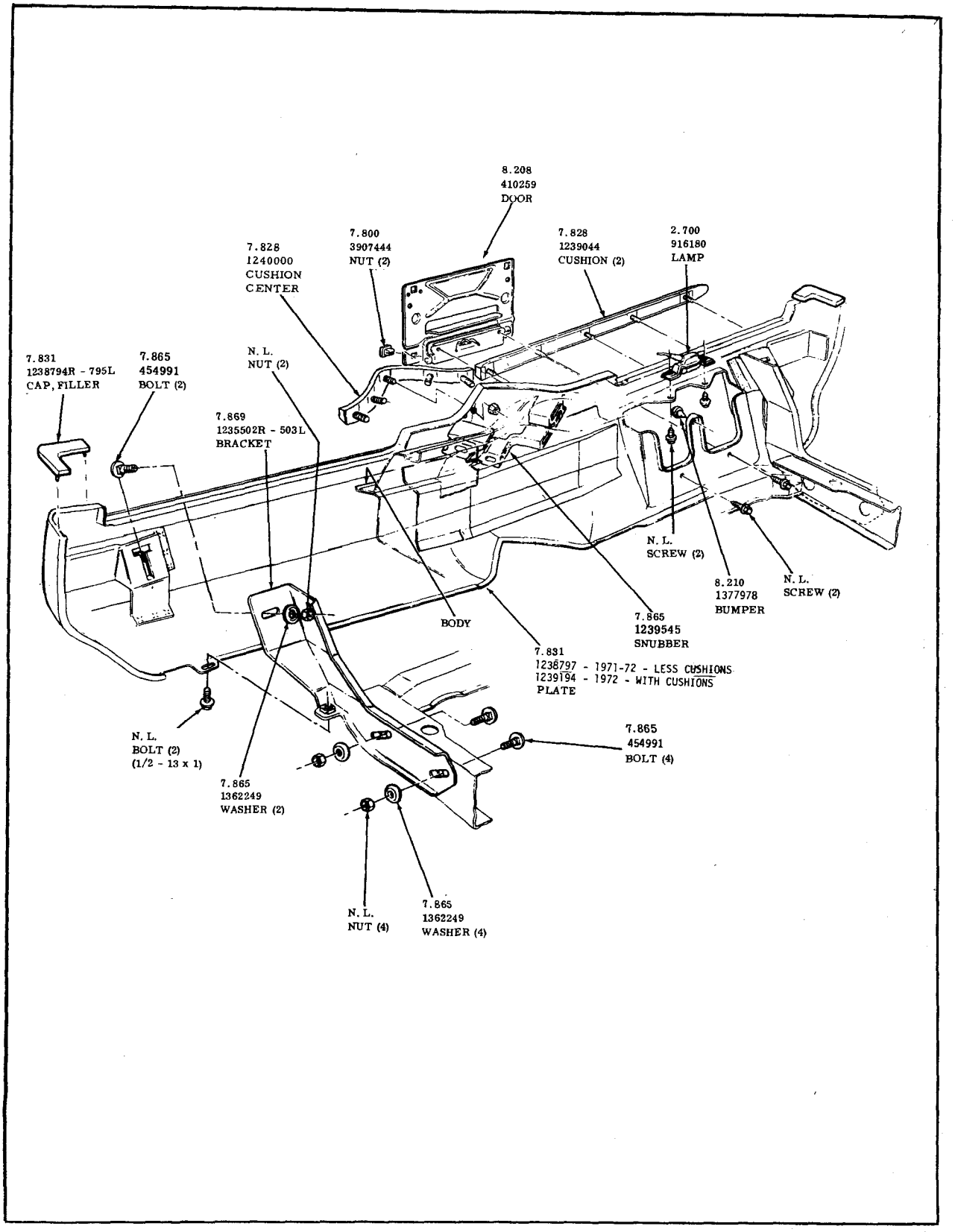

REAR BUMPER

1971-1972 -9000

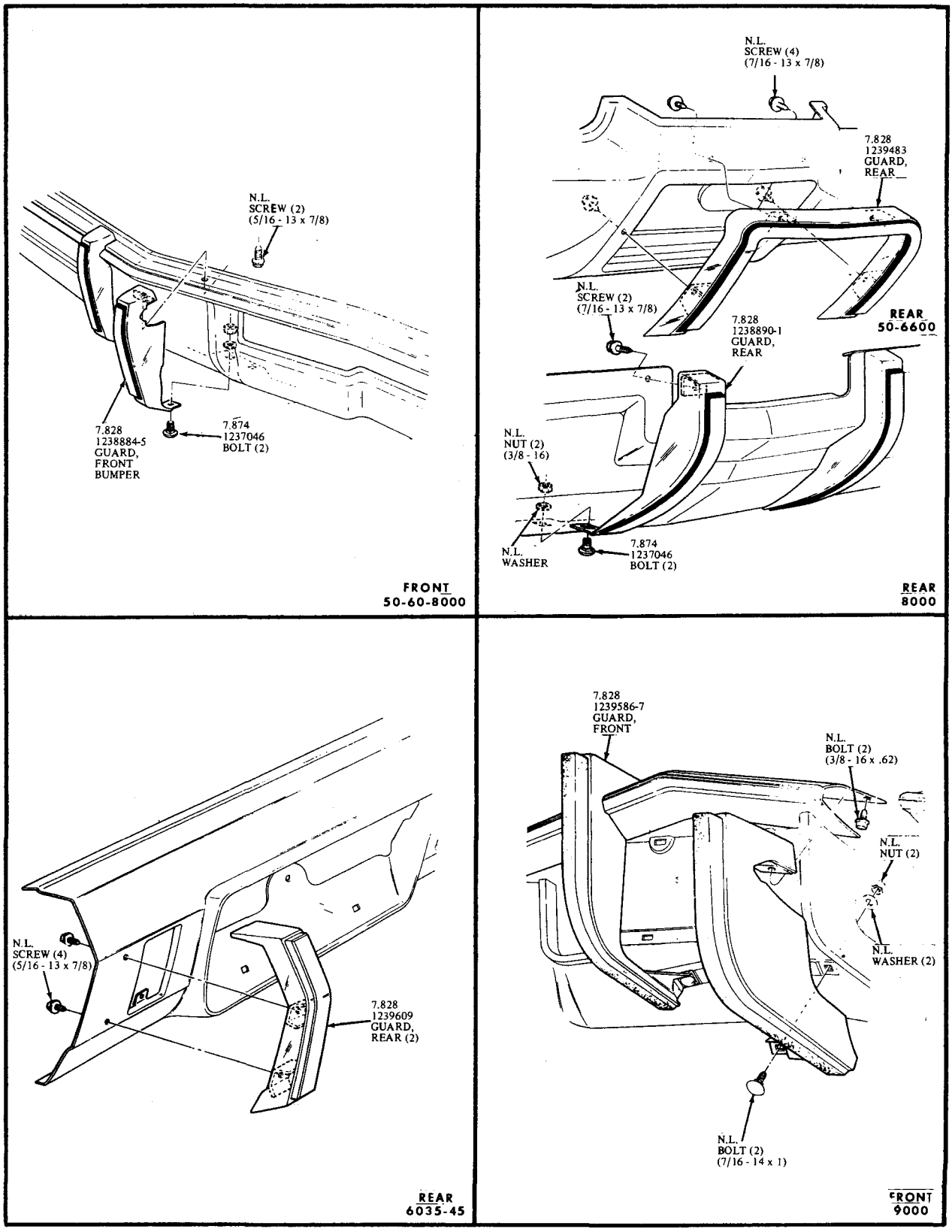

FRONT AREAR BUMPER GUARDS

1972 50-60-80-9000

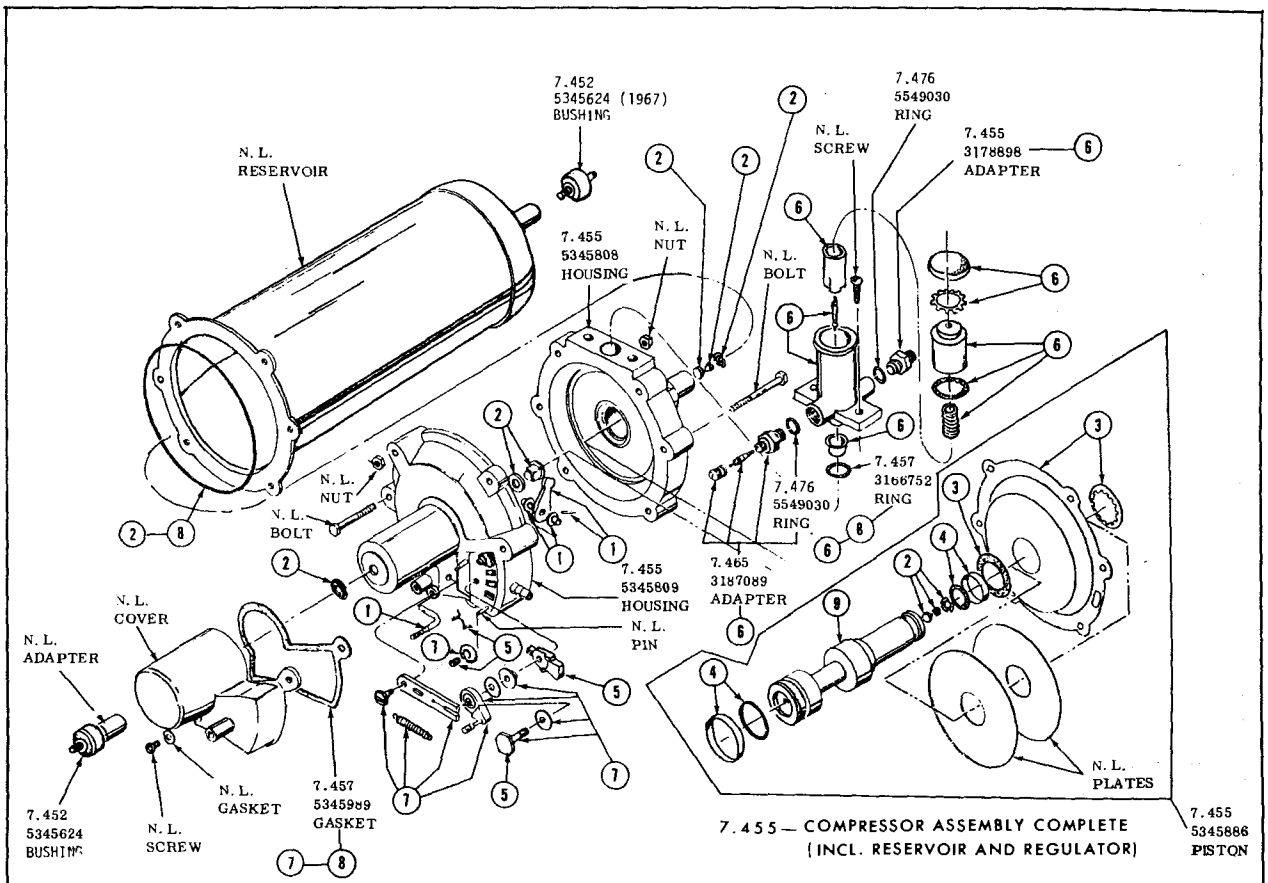

(1) INCLUDED IN—7.460—3188816—SWIVEL AND ROCKER ARM PKG.
(2) INCLUDED IN—7.460—3188817—VALVE PKG.
(3) INCLUDED IN—7.460—3188818 —DIAPHRAGM
(4) INCLUDED IN—7.457—3188819—SEAL PACKAGE
(5) INCLUDED IN—7.460—5355548-DIST. VALVE
(6) INCLUDED IN—7.460—3188822—REGULATOR PKG.
(7) 7.460—5355549—ACTUATING ARM PKG.
(8) 7.460—5353828—GASKET AND SEAL PKG.
(9) 7.455—5345886—PISTON, ALSO INCL. PKG. #(3)—(4) AND VALVE, SPRING, & RETAINER

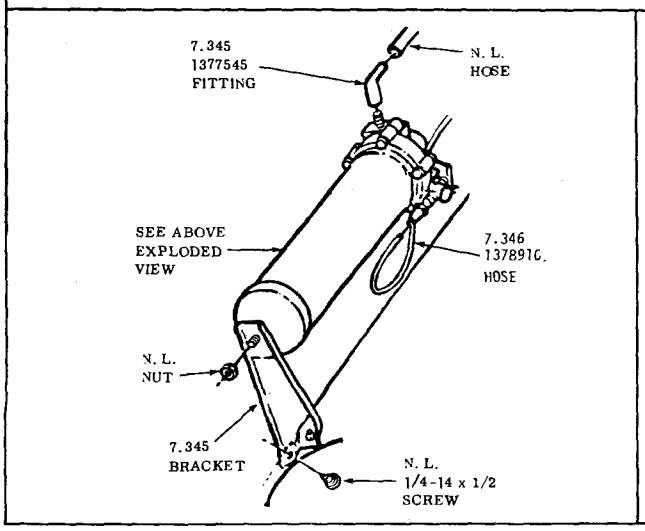

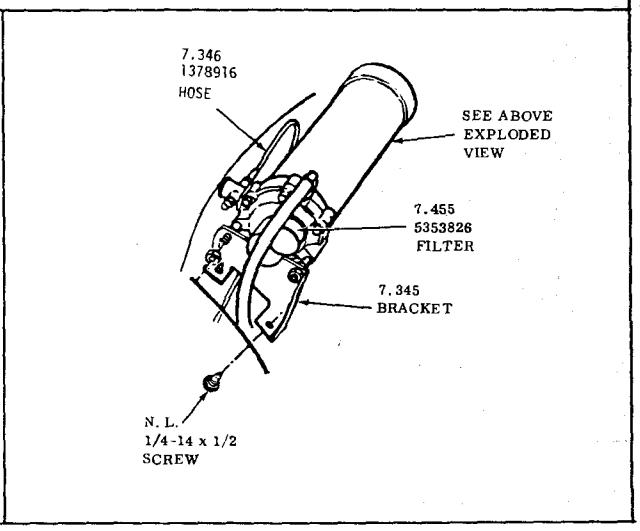

TYPICAL

AUTOMATIC LEVEL CONTROL COMPRESSOR
1966-1972-ALL

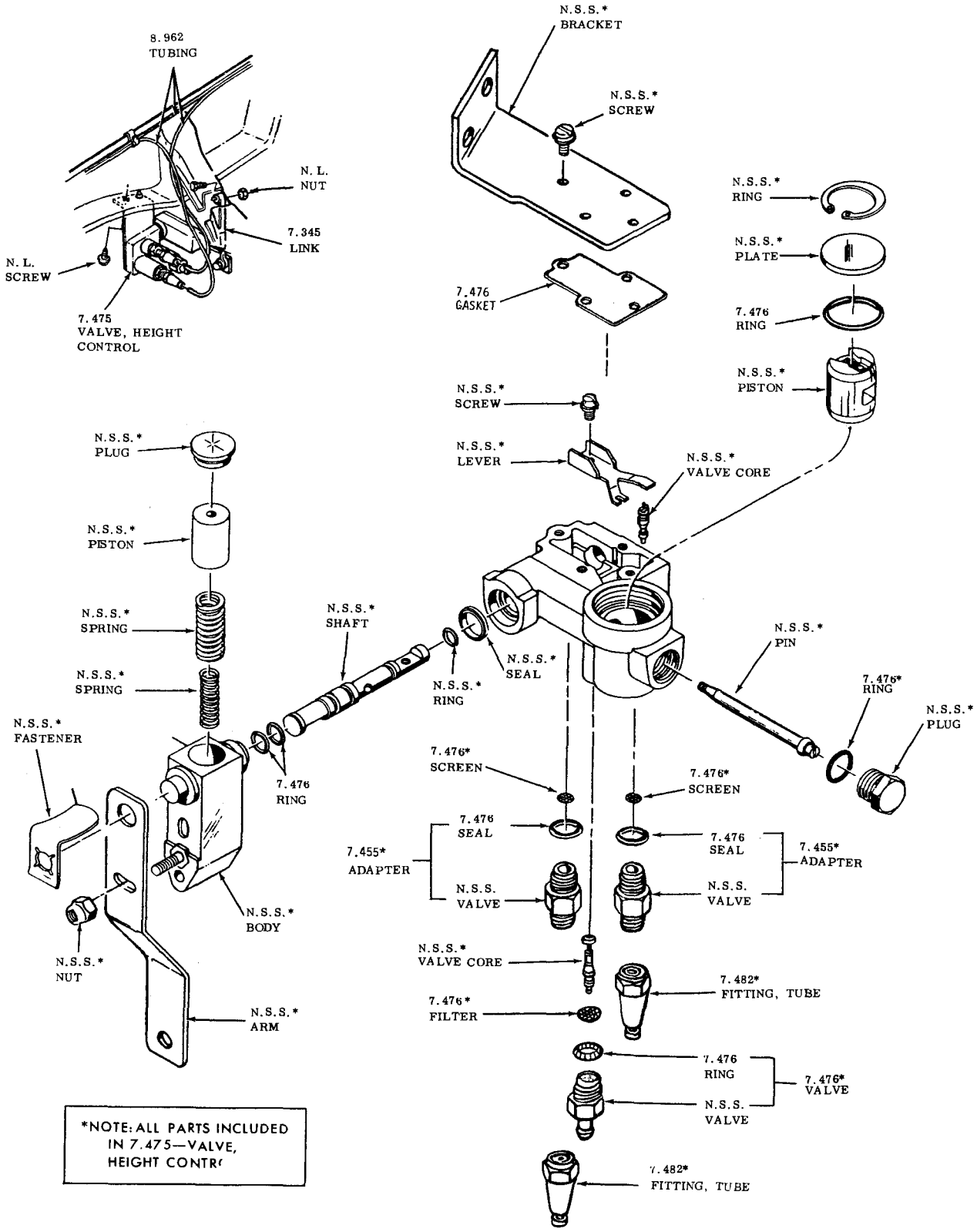

TYPICAL
CONTROL VALVE
AUTOMATIC LEVEL CONTROL
1966-1972-ALL

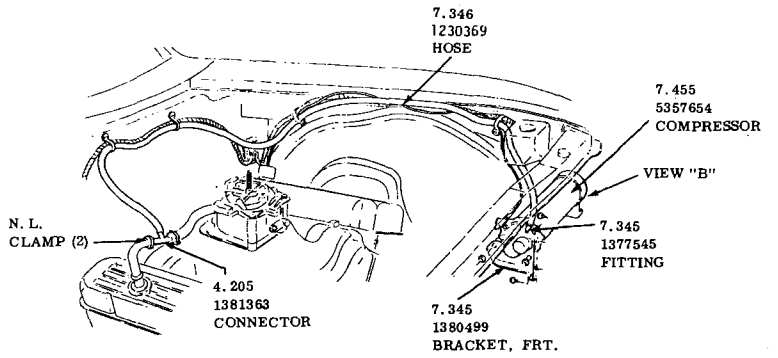

1967—SPORTWAGON

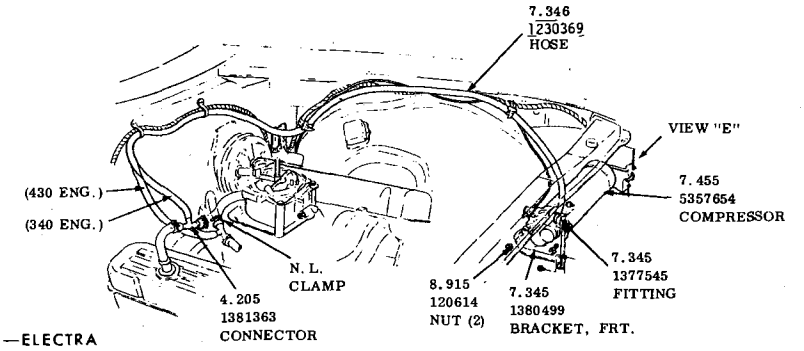

1967—LESABRE—WILDCAT—ELECTRA

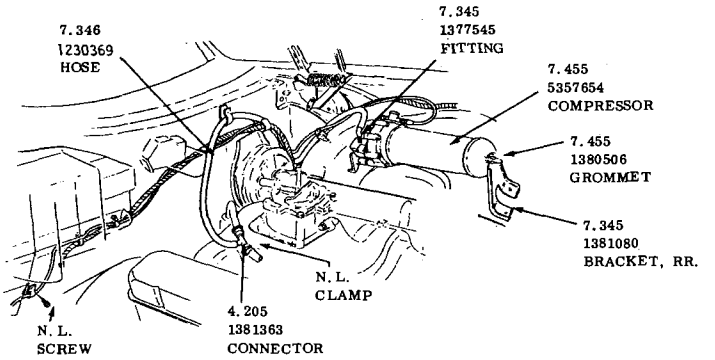

1967—RIVIERA

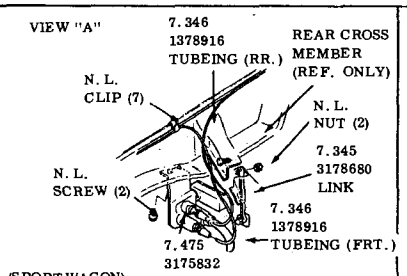

(SPORTWAGON)

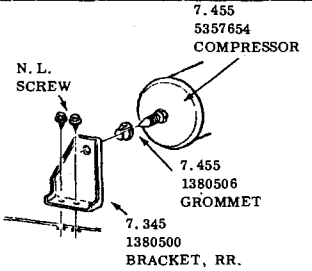

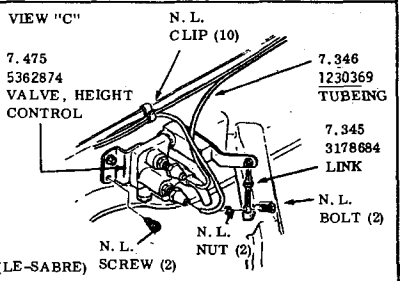

(LE-SABRE)

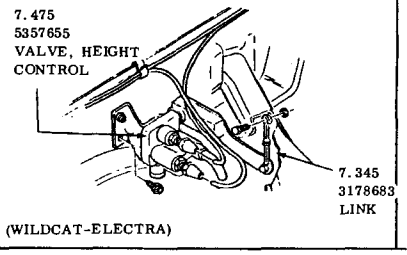

(WILDCAT-ELECTRA)

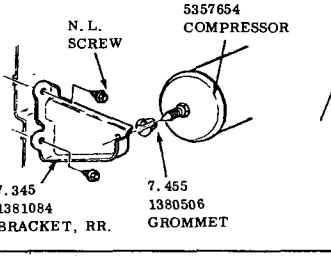

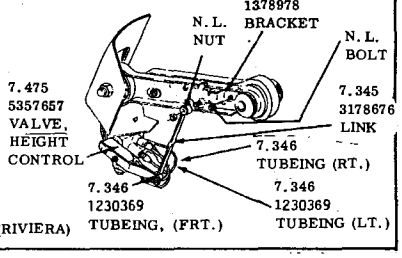

(RIVIERA)

1967 AUTOMATIC LEVEL CONTROL

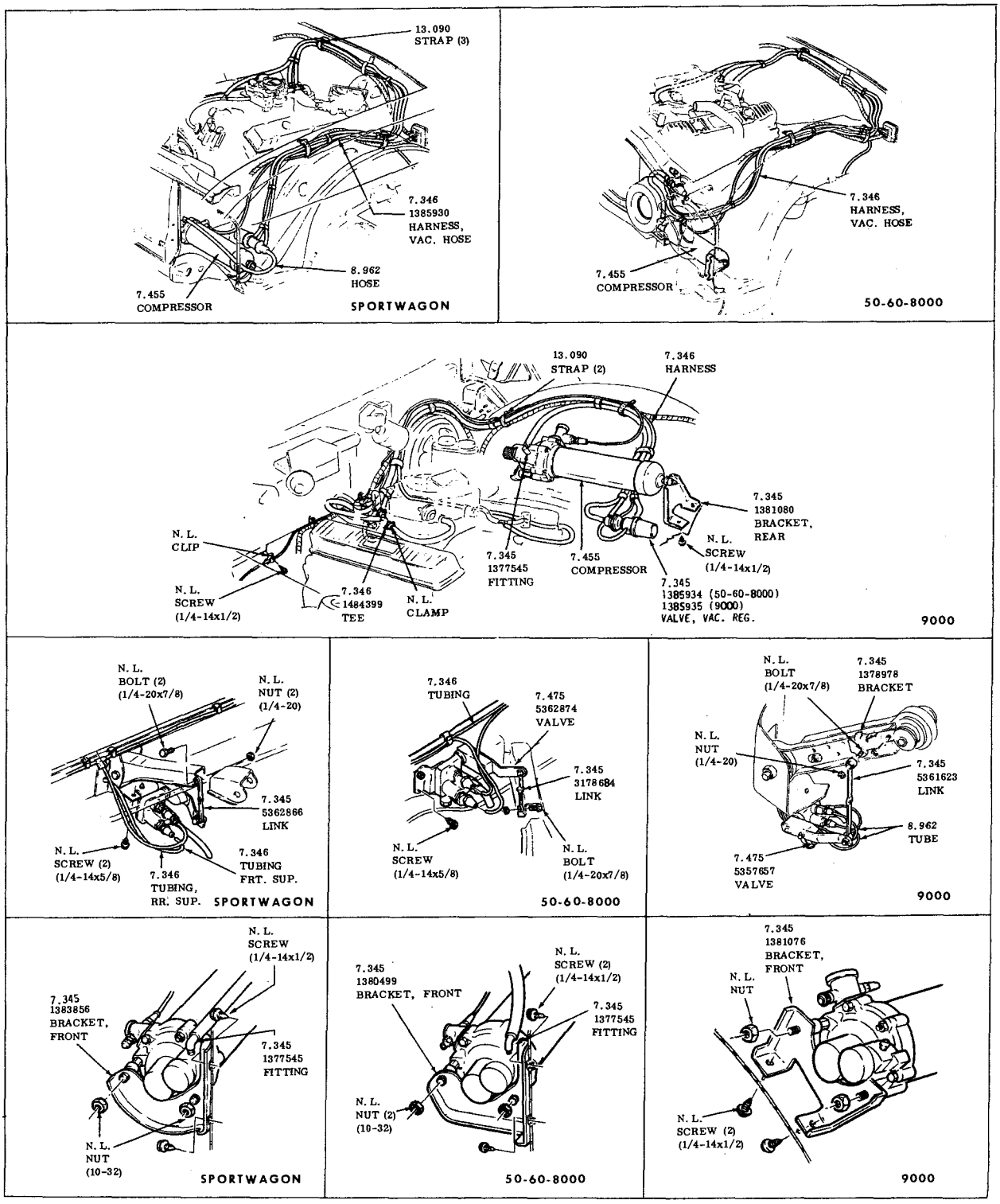

AUTOMATIC LEVEL CONTROL
1968-ALL

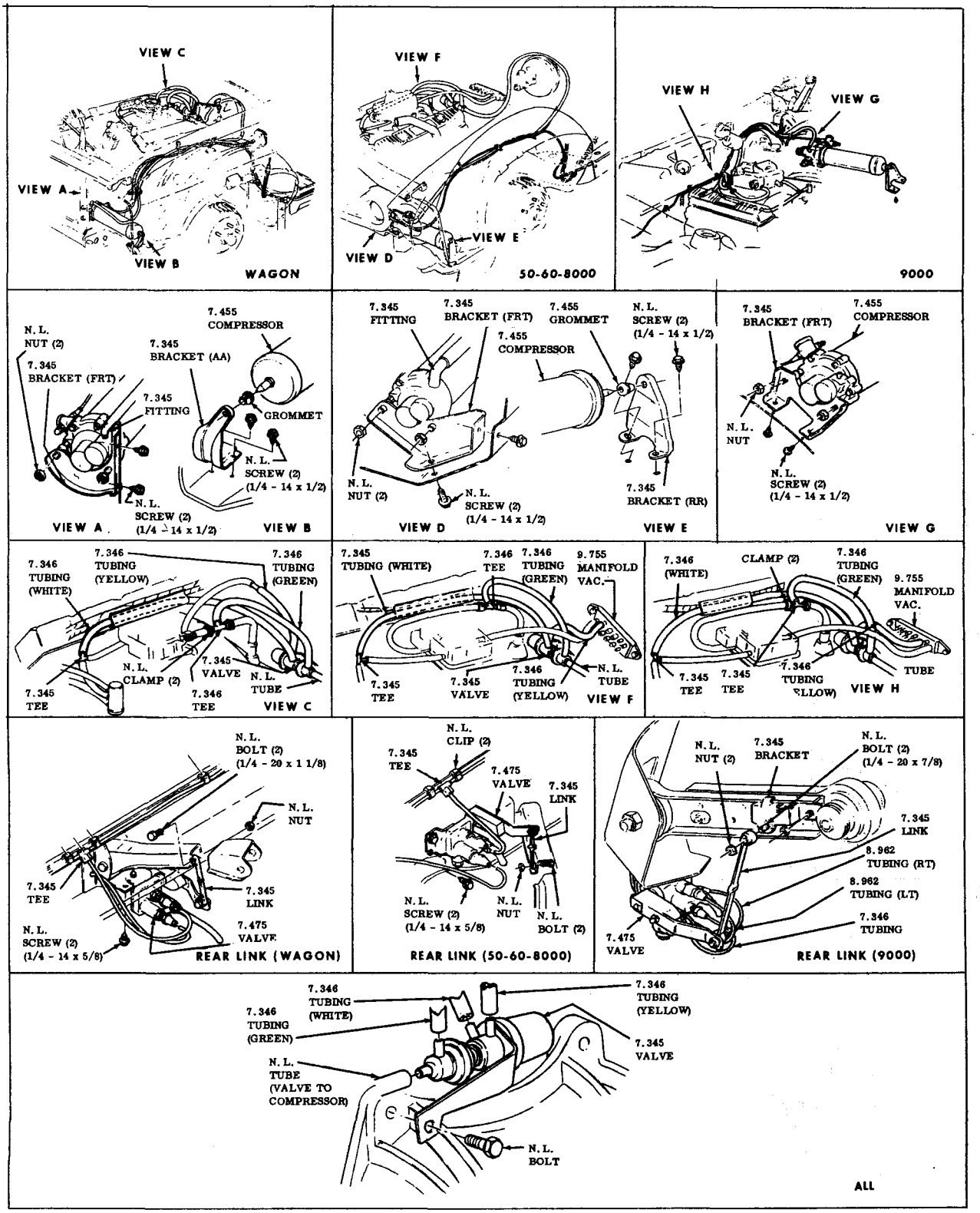

AUTOMATIC LEVEL CONTROL
1969-ALL

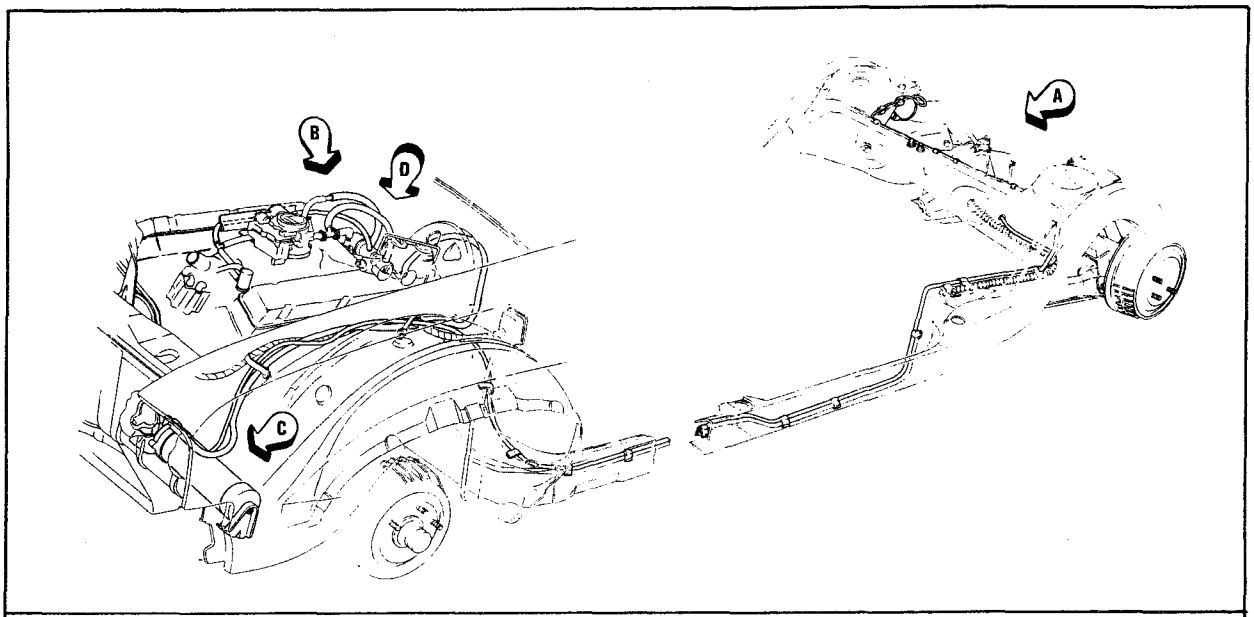

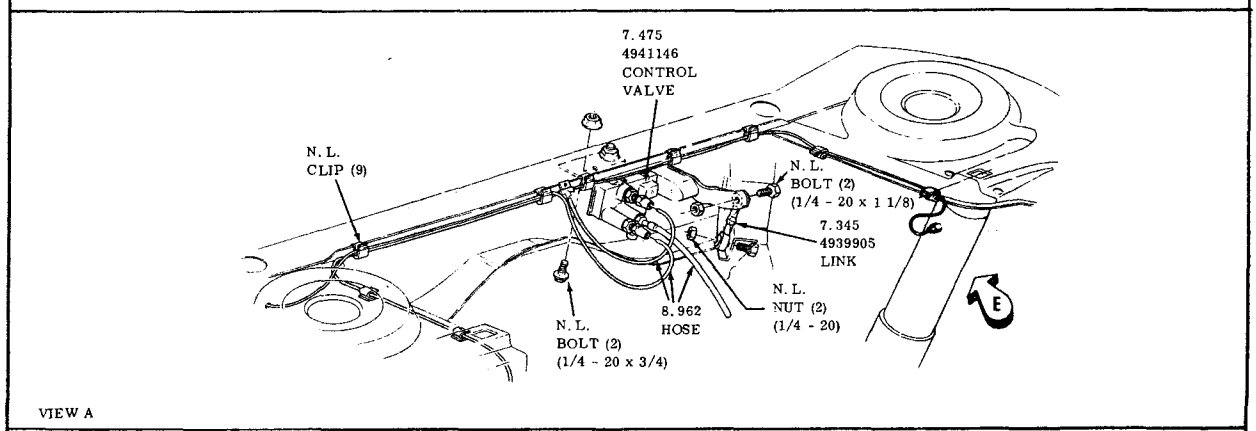

VIEW A

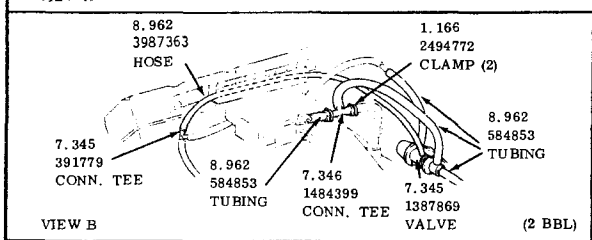

VIEW B (2 BBL)

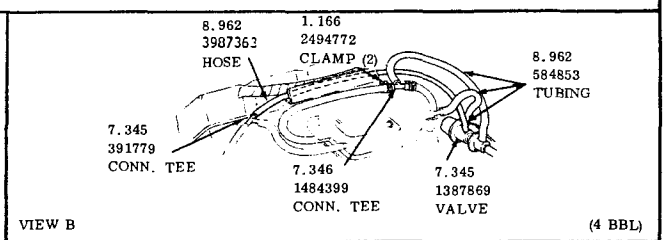

VIEW B (4 BBL)

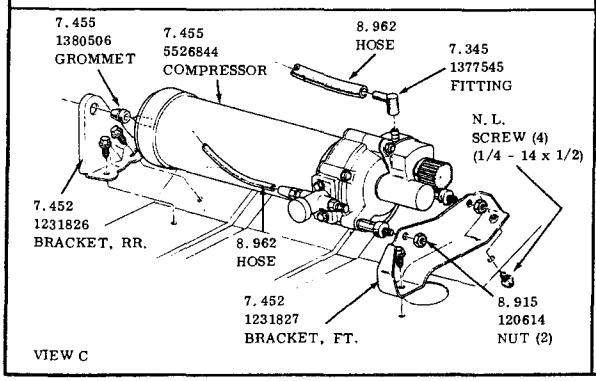

VIEW C

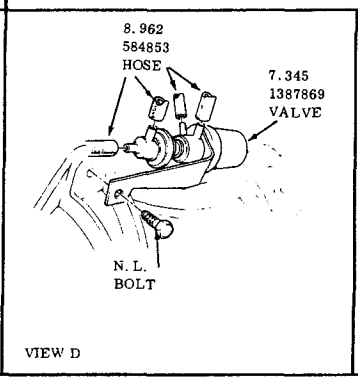

VIEW D

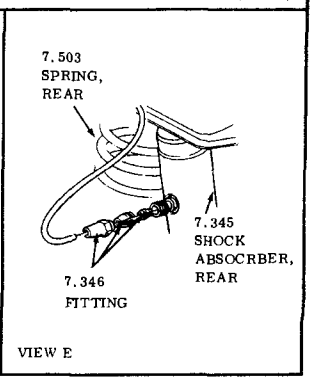

VIEW E

AUTOMATIC LEVEL CONTROL
1971 - 1972 SPORTWAGON

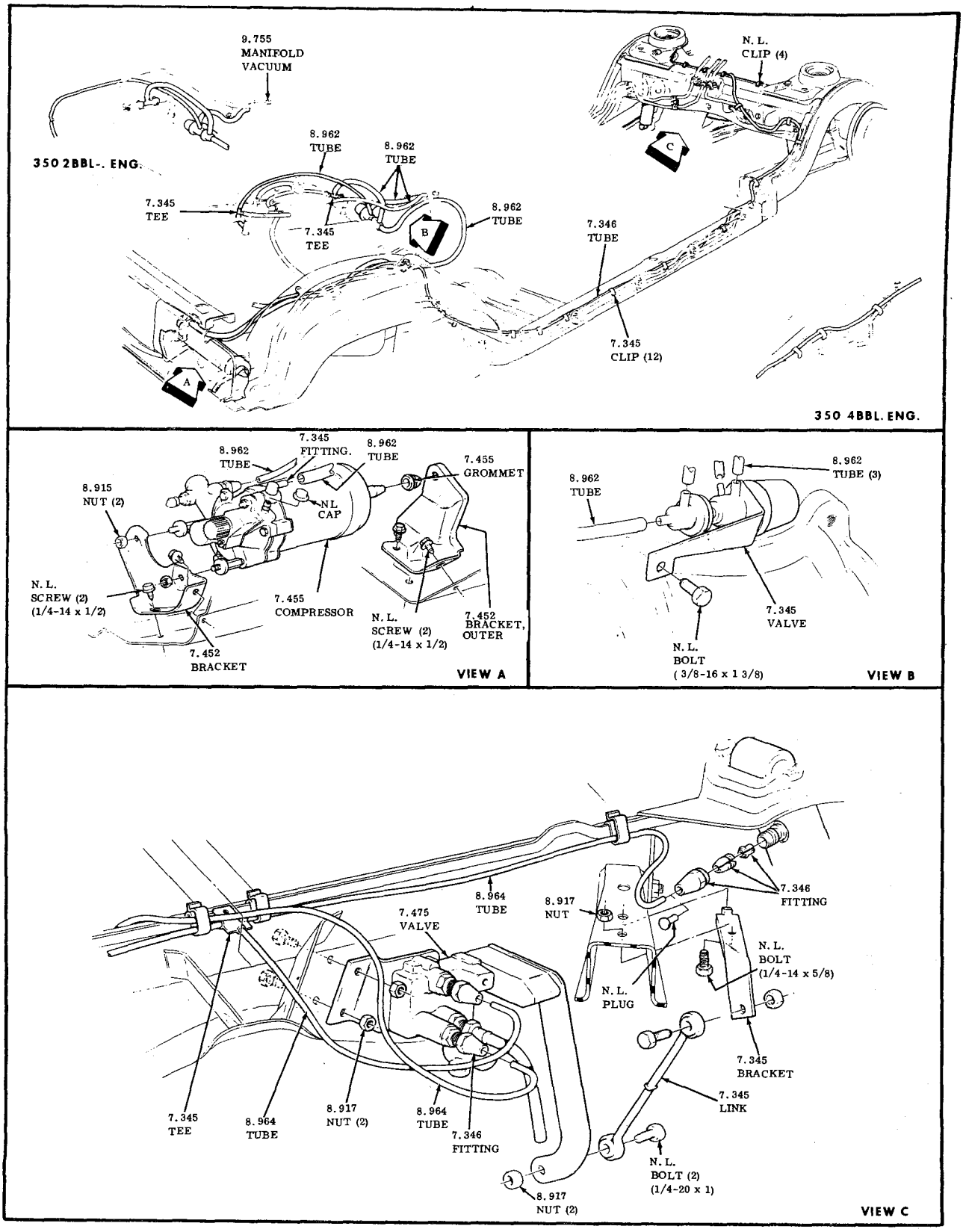

AUTOMATIC LEVEL CONTROL

1971- 1972 50-66-80-9000

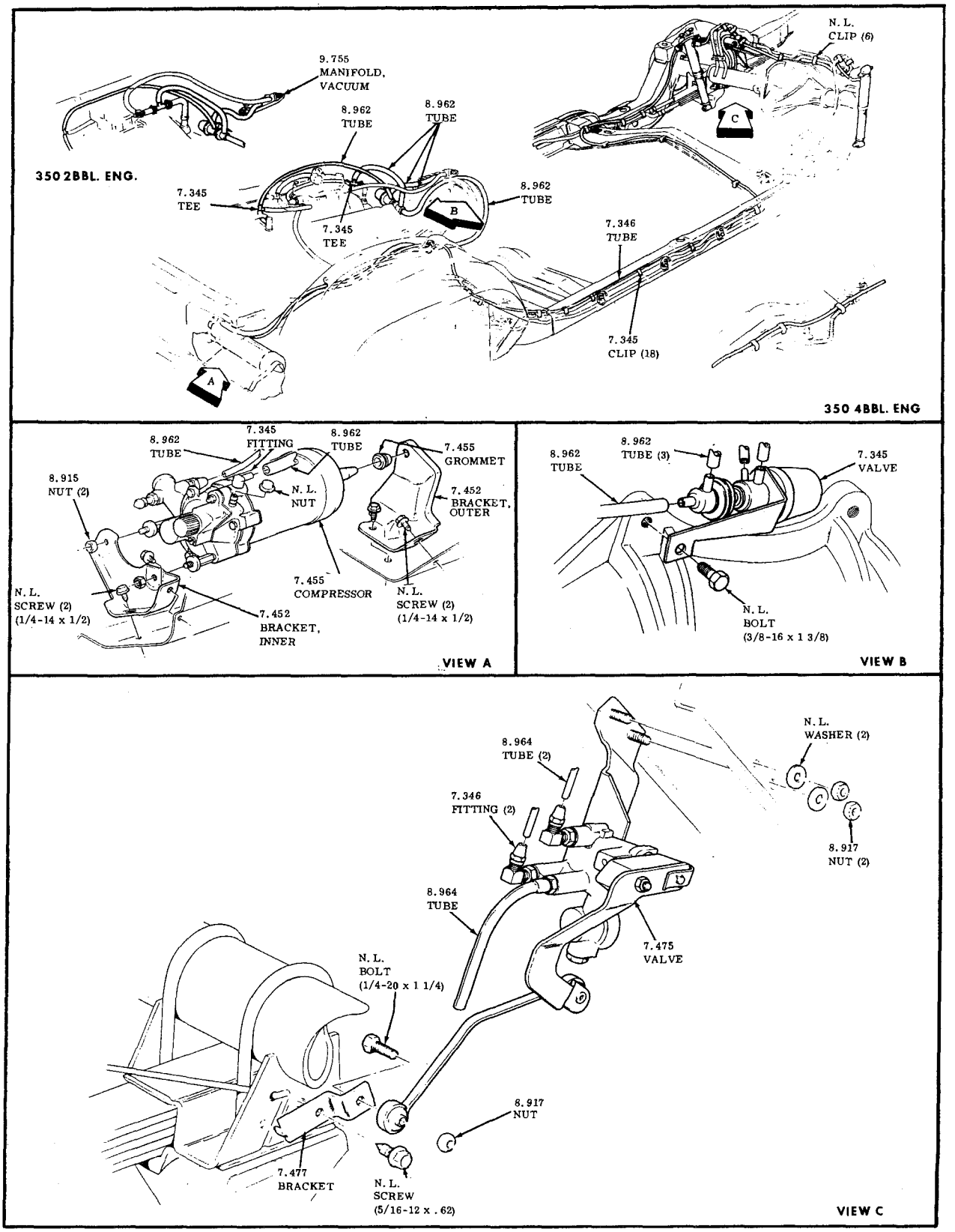

AUTOMATIC LEVEL CNTROL

1971- 1972 6035-45

GROUP 8

SHEET METAL

HEATER PARTS

STANDARD PARTS

MEMORANDA

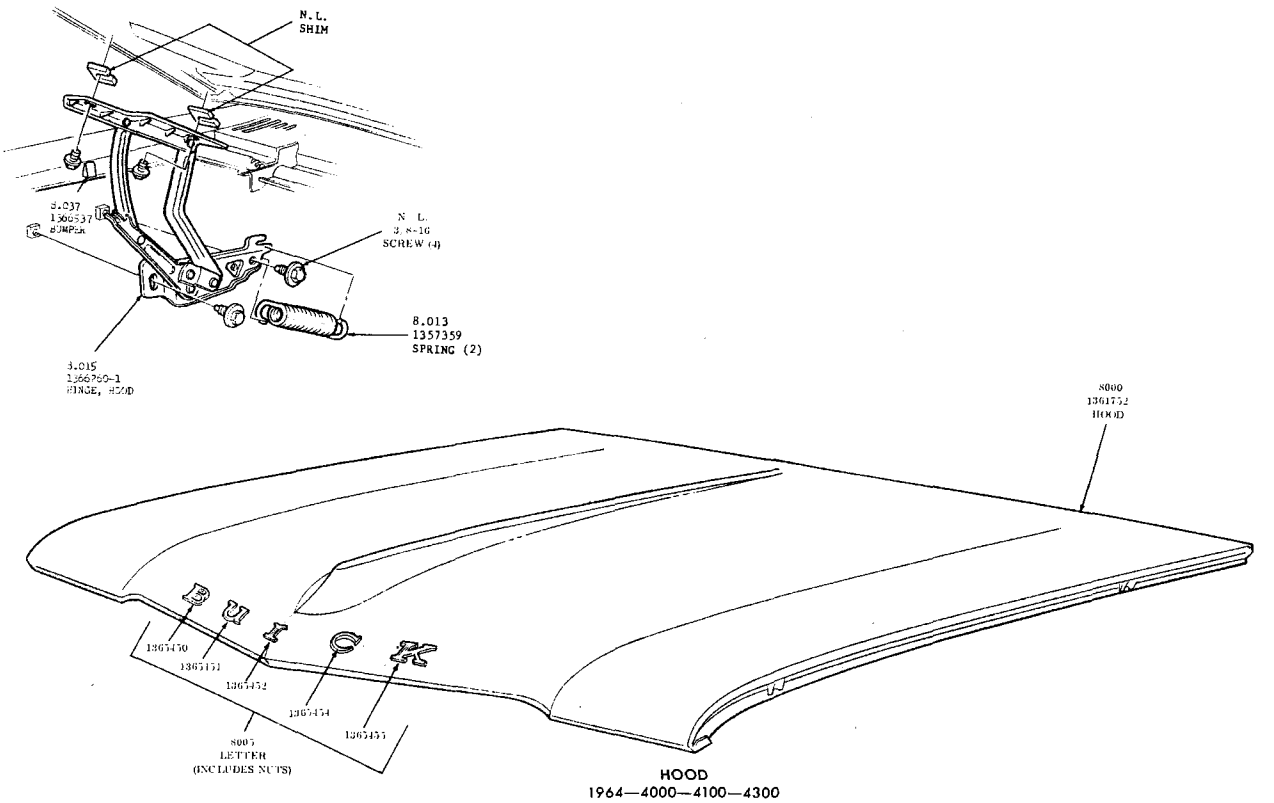

HOOD
1964—4000—4100—4300

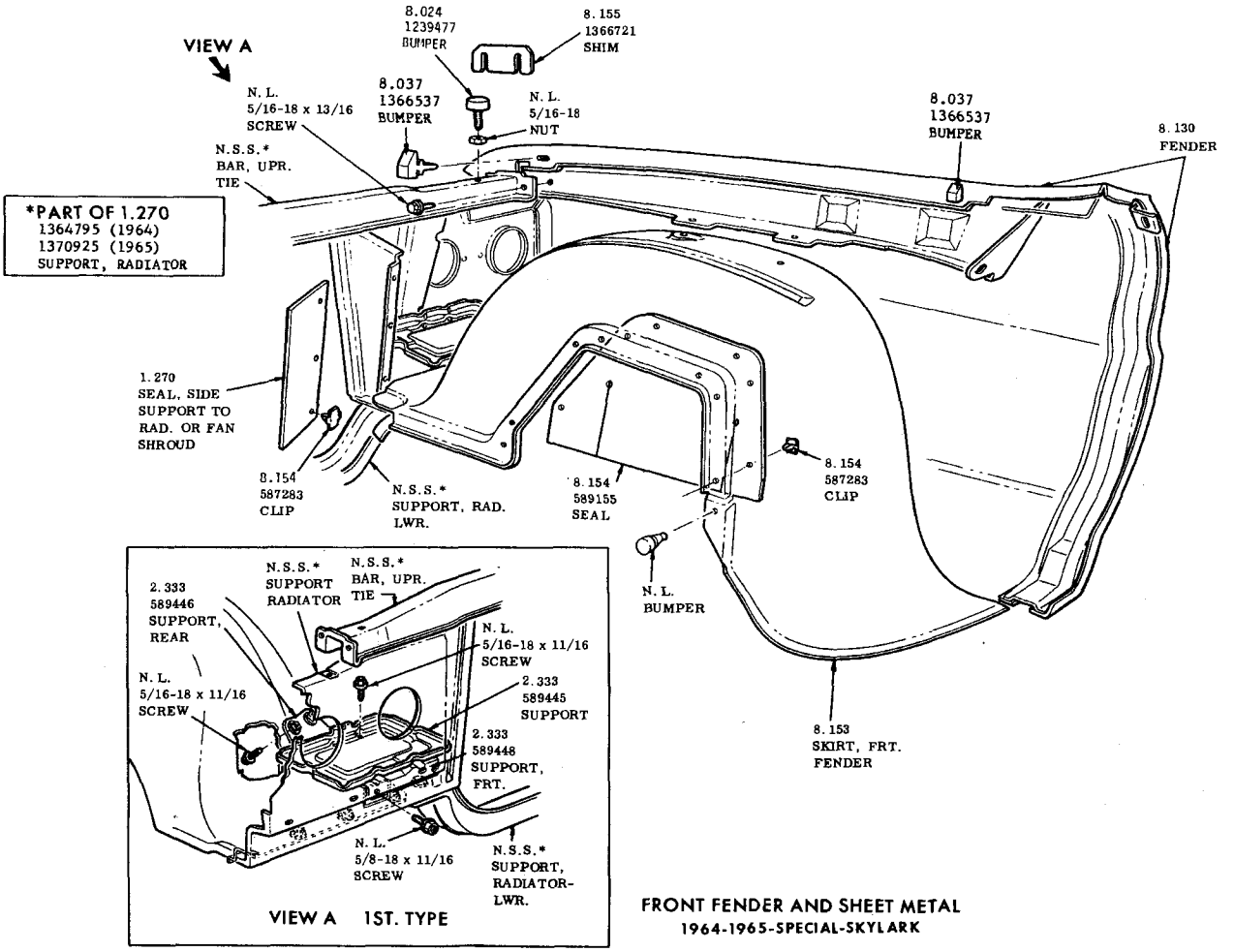

FRONT FENDER AND SHEET METAL
1964-1965-SPECIAL-SKYLARK

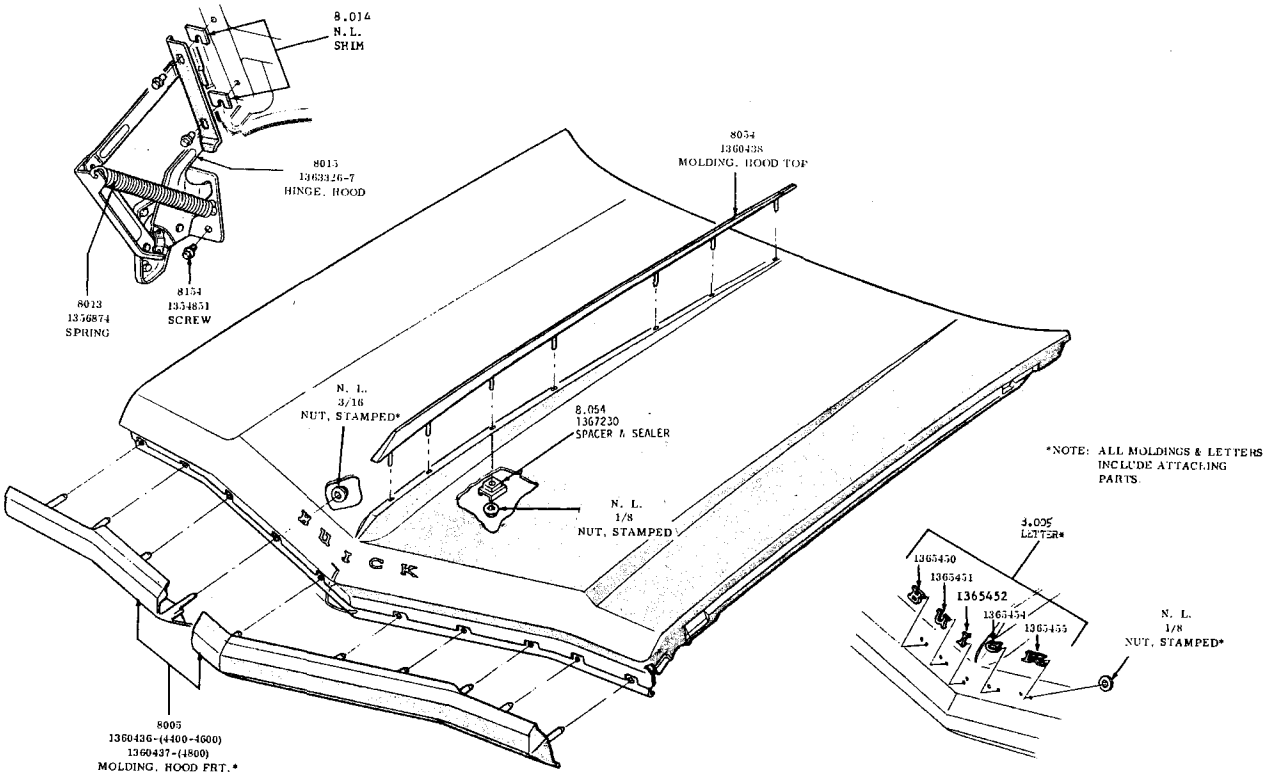

HOOD 1964—4400—4600—4800

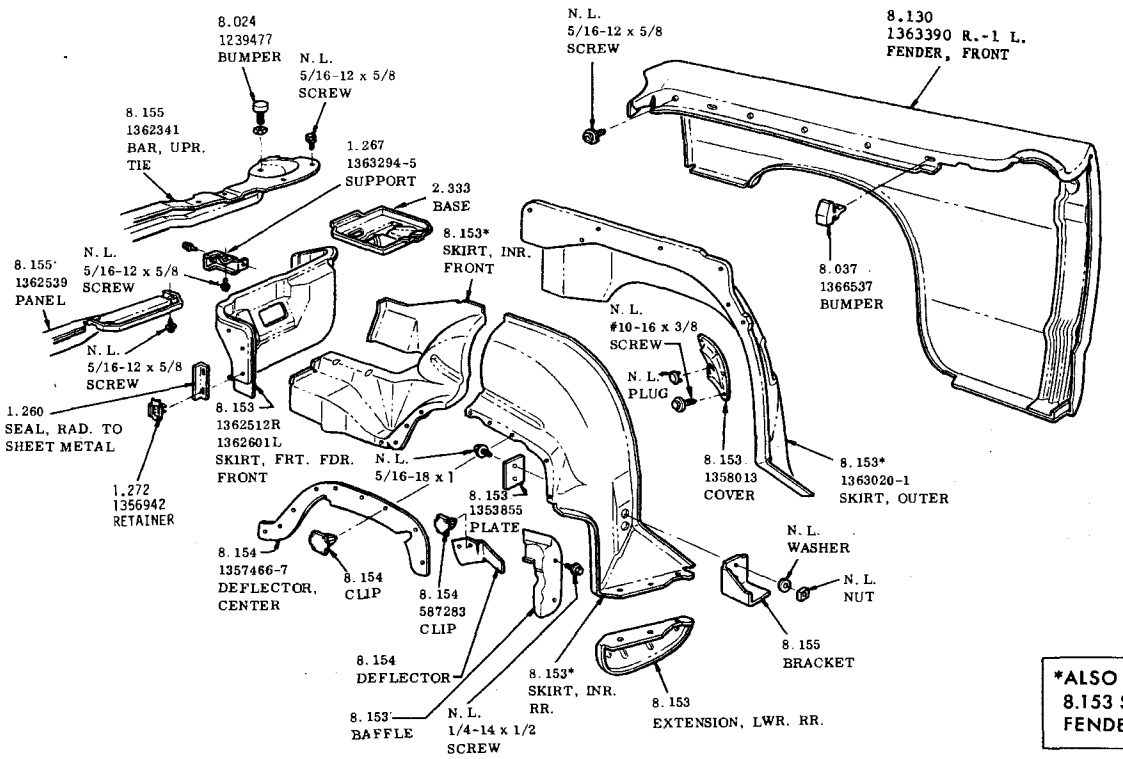

*ALSO INCLUDED IN 8.153 SKIRT FRONT FENDER.

FRONT FENDER AND SHEET METAL
1964--4400—4600—4800

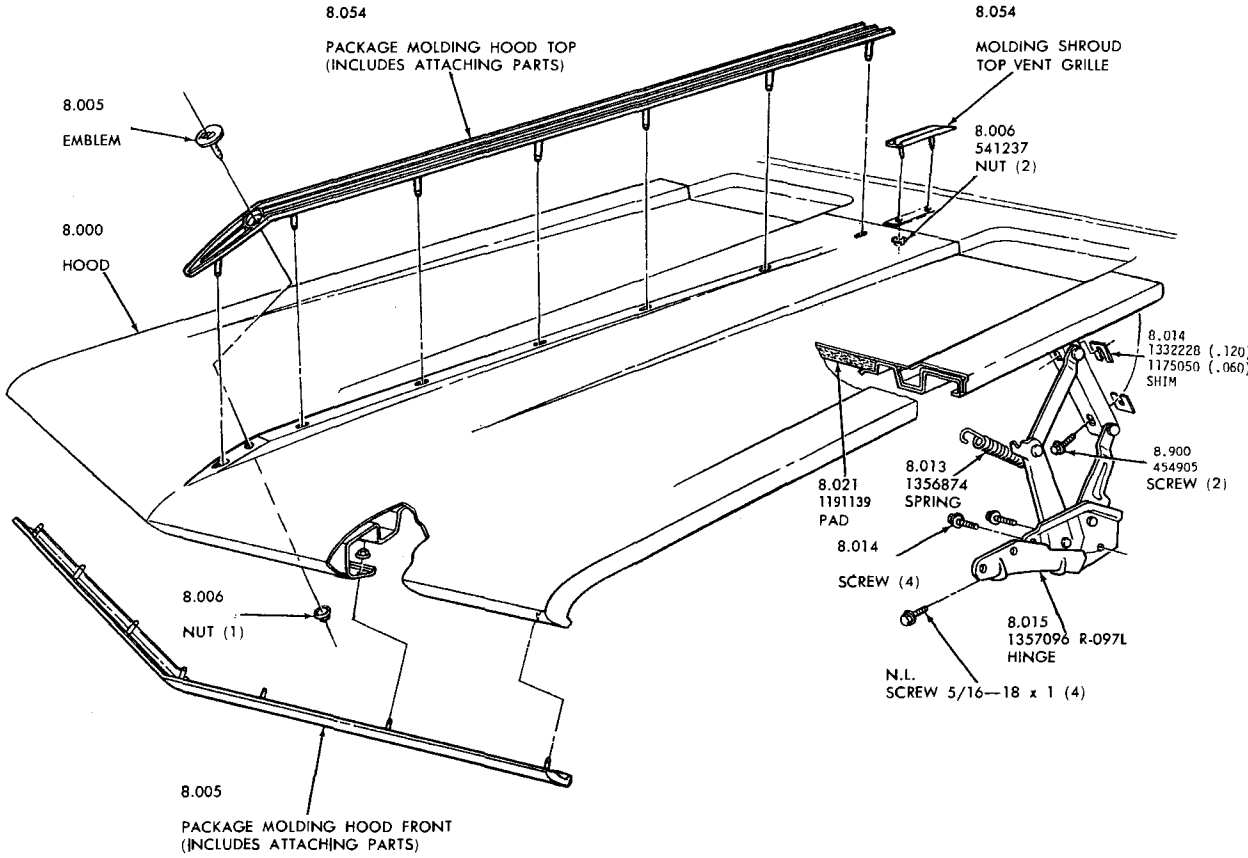

TYPICAL
HOOD—1963—1964 -4700

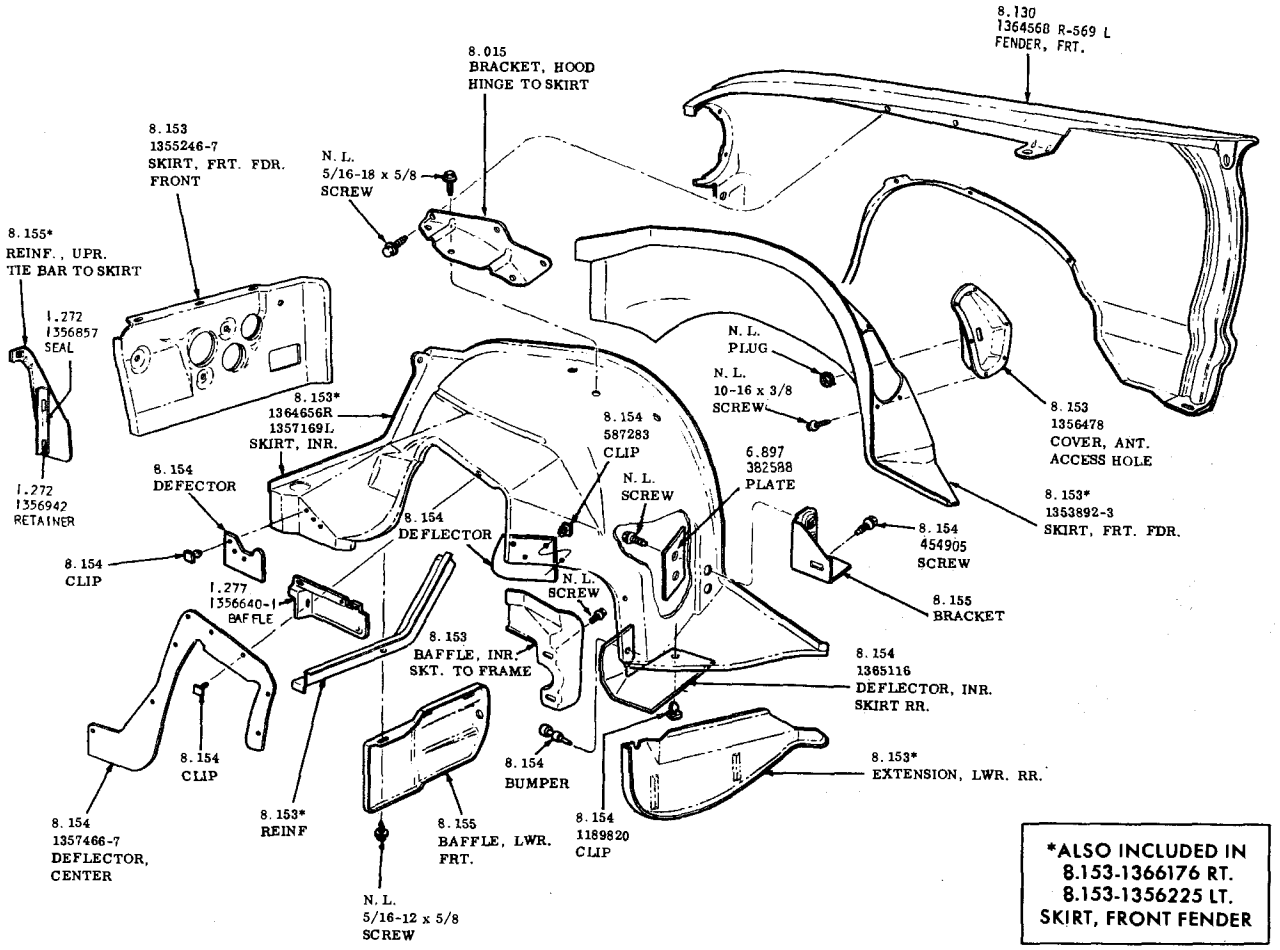

*ALSO INCLUDED IN
8.153-1366176 RT.
8.153-1356225 LT.
SKIRT, FRONT FENDER

FRONT FENDER AND SHEET METAL
1964--4700

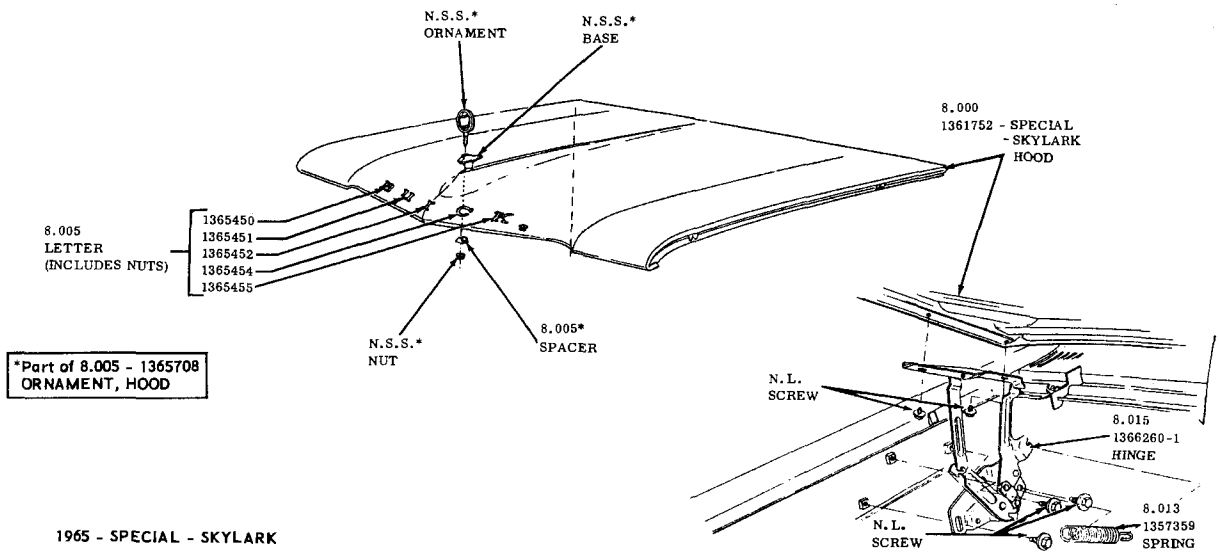

1965 - SPECIAL - SKYLARK

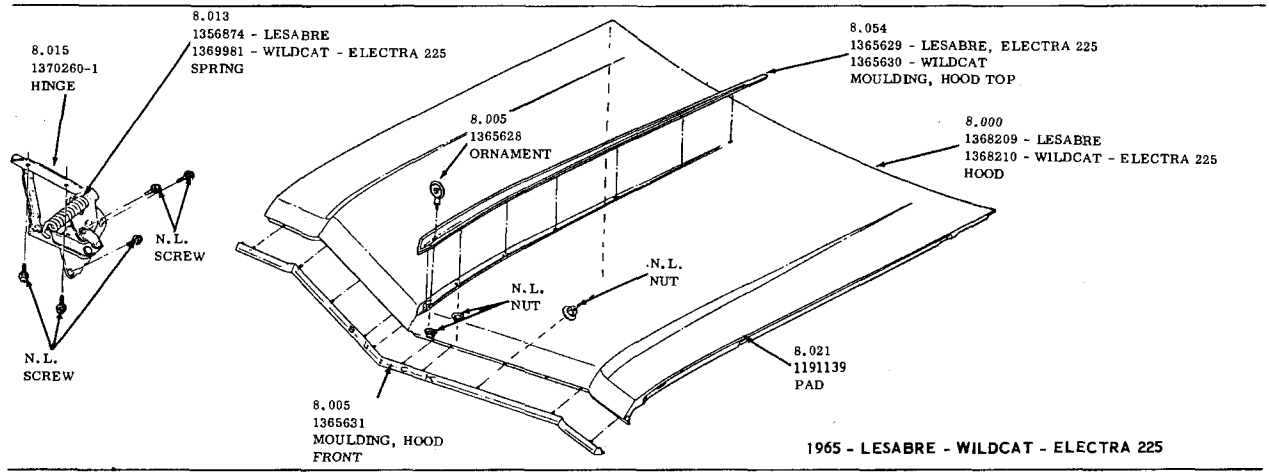

1965 - LESABRE - WILDCAT - ELECTRA 225

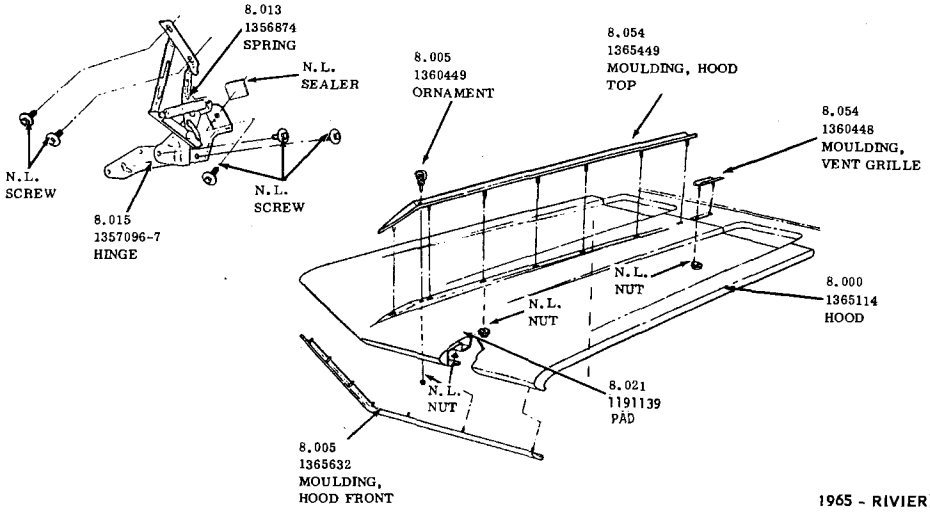

1965 - RIVIERA

1965 - HOODS

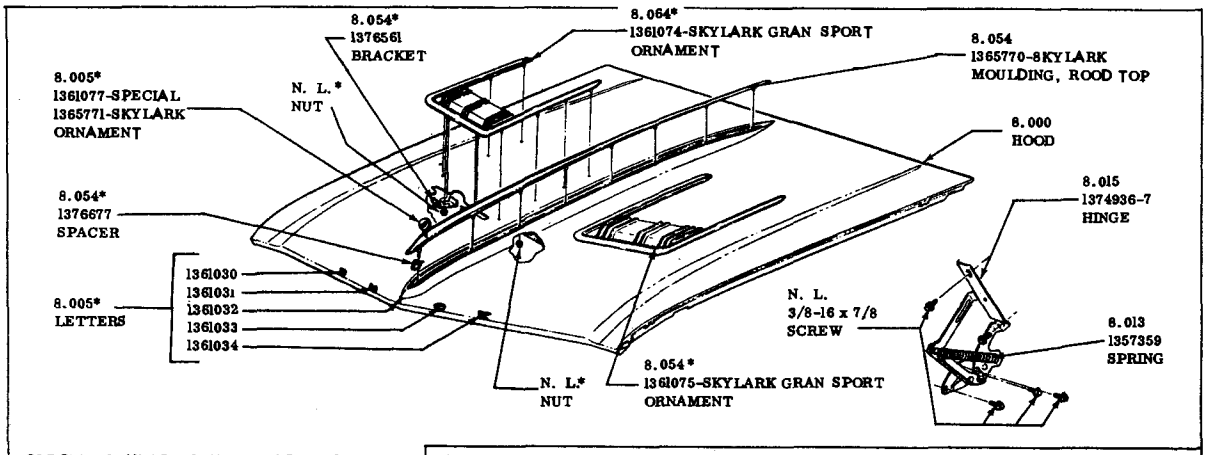

SPECIAL-SKYLARK-SKYLARK GRAN SPORT

*NOTE: ALL ATTACHING PARTS ARE INCLUDED WITH ORNAMENTS AND MOULDINGS

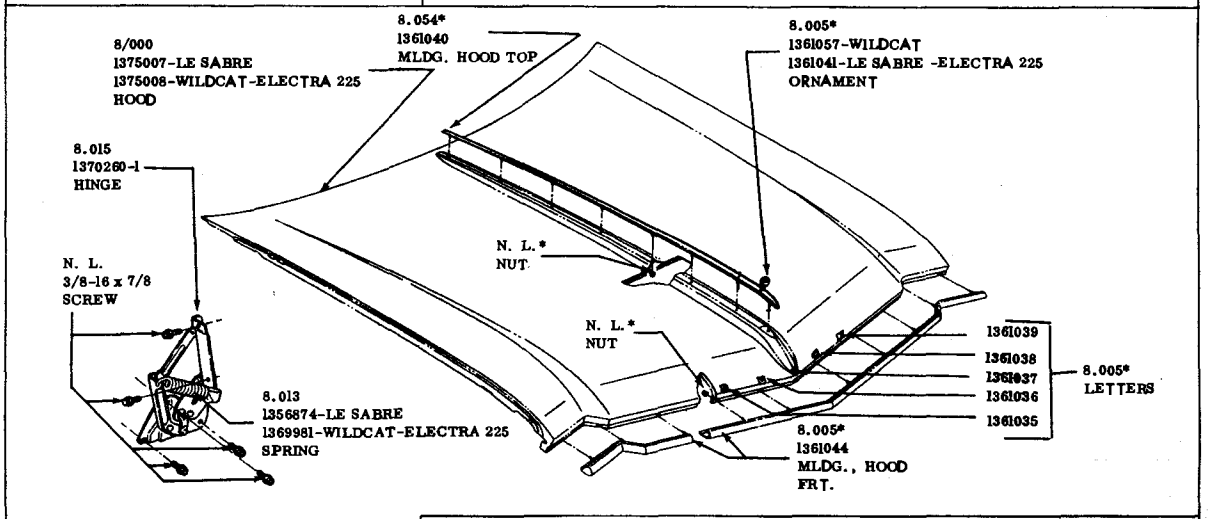

LE SABRE-WILDCAT-ELECTRA 225

*NOTE: ALL ATTACHING PARTS ARE INCLUDED WITH ORNAMENTS AND MOULDINGS

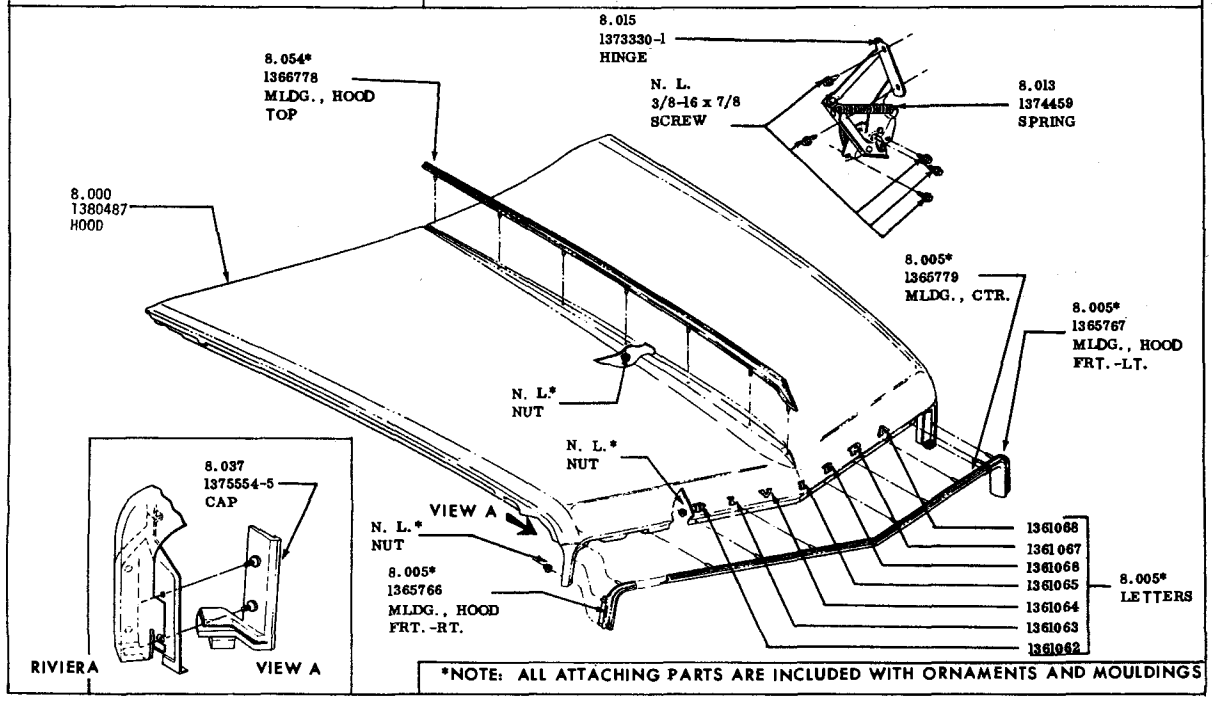

*NOTE: ALL ATTACHING PARTS ARE INCLUDED WITH ORNAMENTS AND MOULDINGS

HOODS 1966-ALL

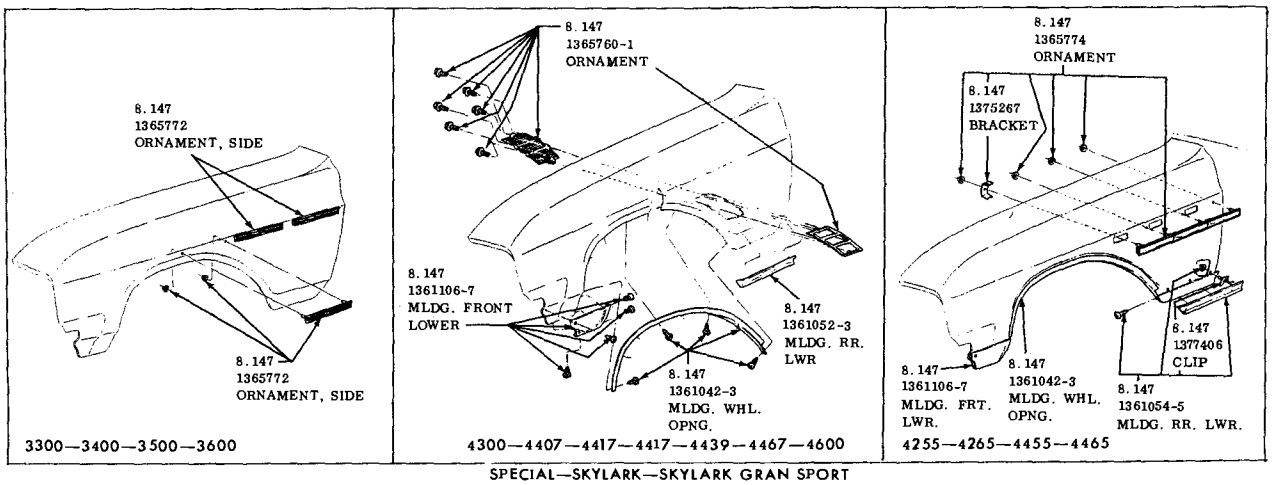

SPECIAL—SKYLARK—SKYLARK GRAN SPORT
(NOTE: ALL MOULDINGS AND ORNAMENTS INCLUDE ATTACHING PARTS)

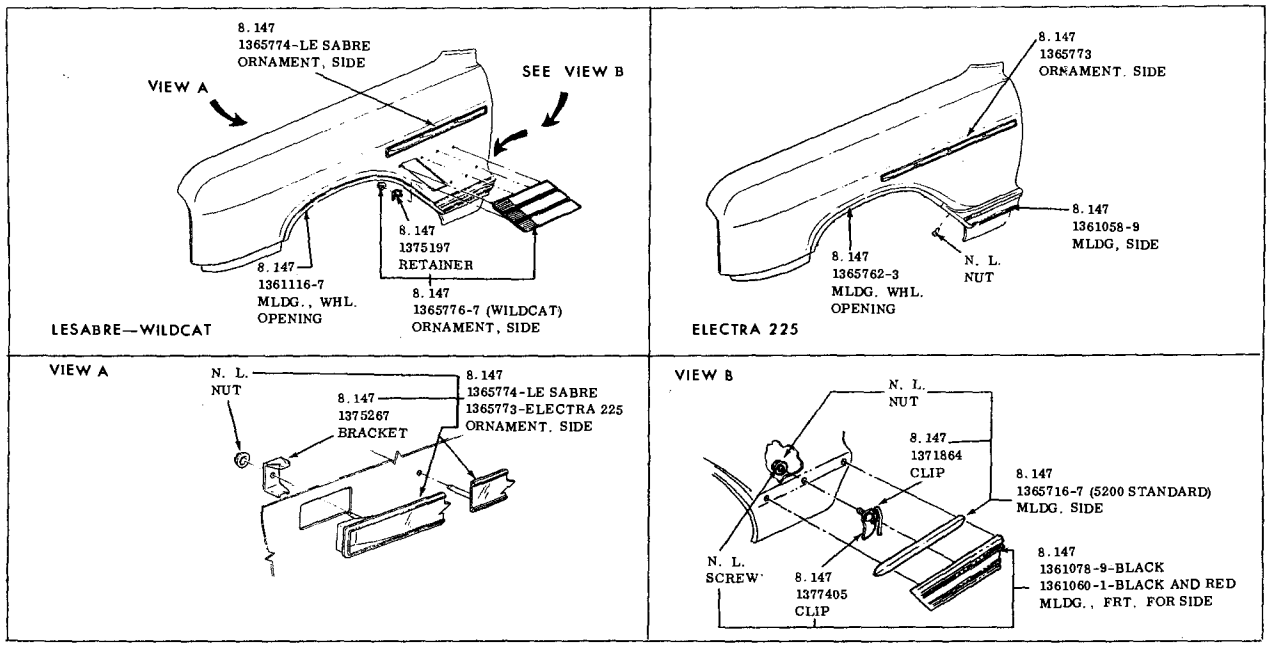

LESABRE—WILDCAT—ELECTRA 225
(NOTE: ALL MOULDINGS AND ORNAMENTS INCLUDE ATTACHING PARTS)

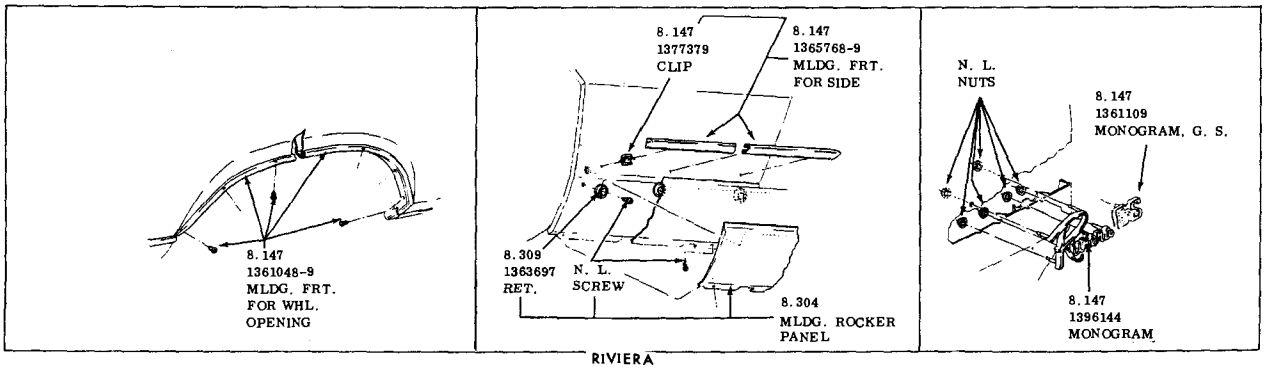

RIVIERA
(NOTE: ALL MOULDINGS AND ORNAMENTS INCLUDE ATTACHING PARTS)

1966 FRONT FENDER MOULDINGS AND ORNAMENTS

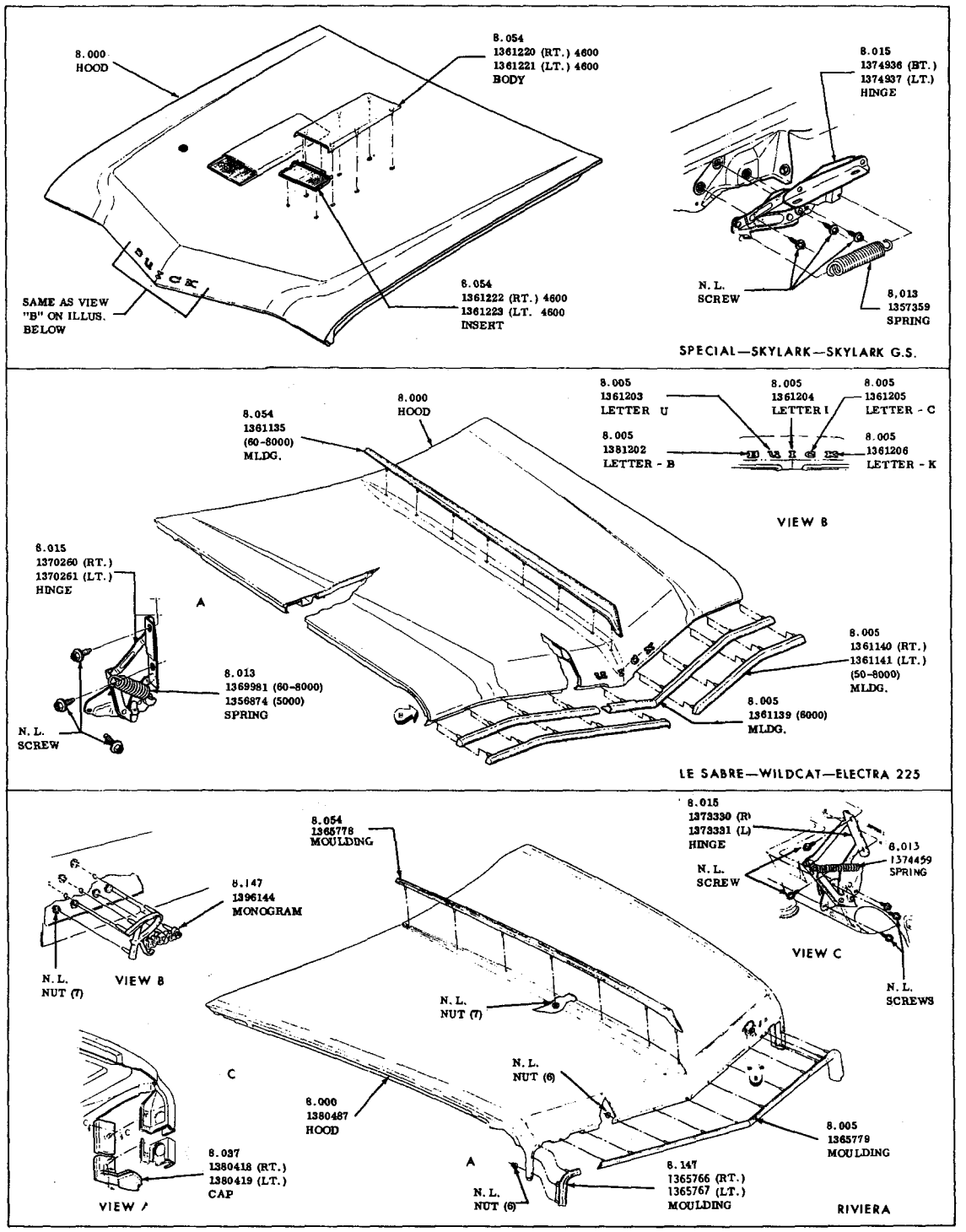

HOOD—1967—ALL

(NOTE: ALL MOULDINGS AND ORNAMENTS INCLUDE ATTACHING PARTS)

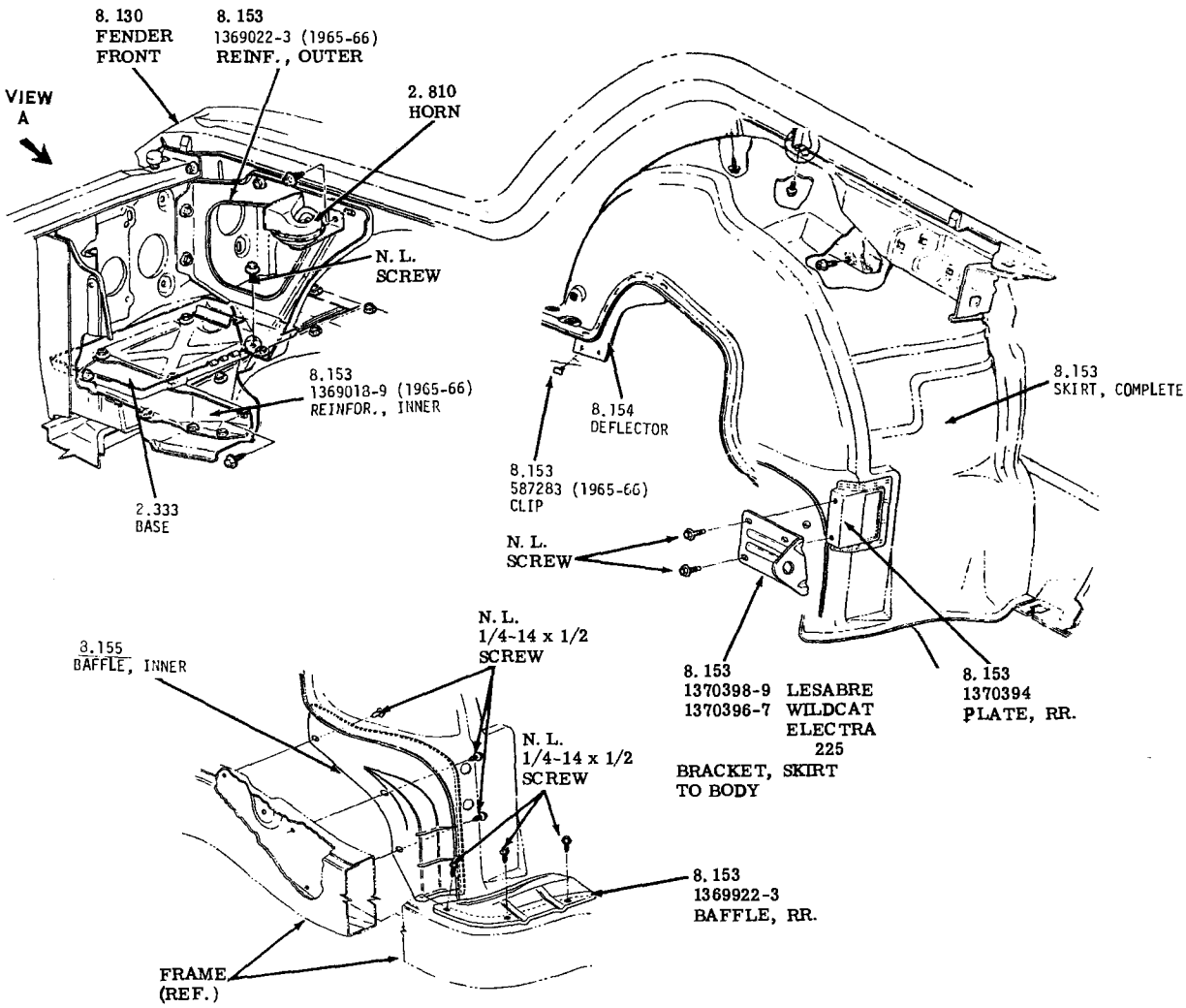

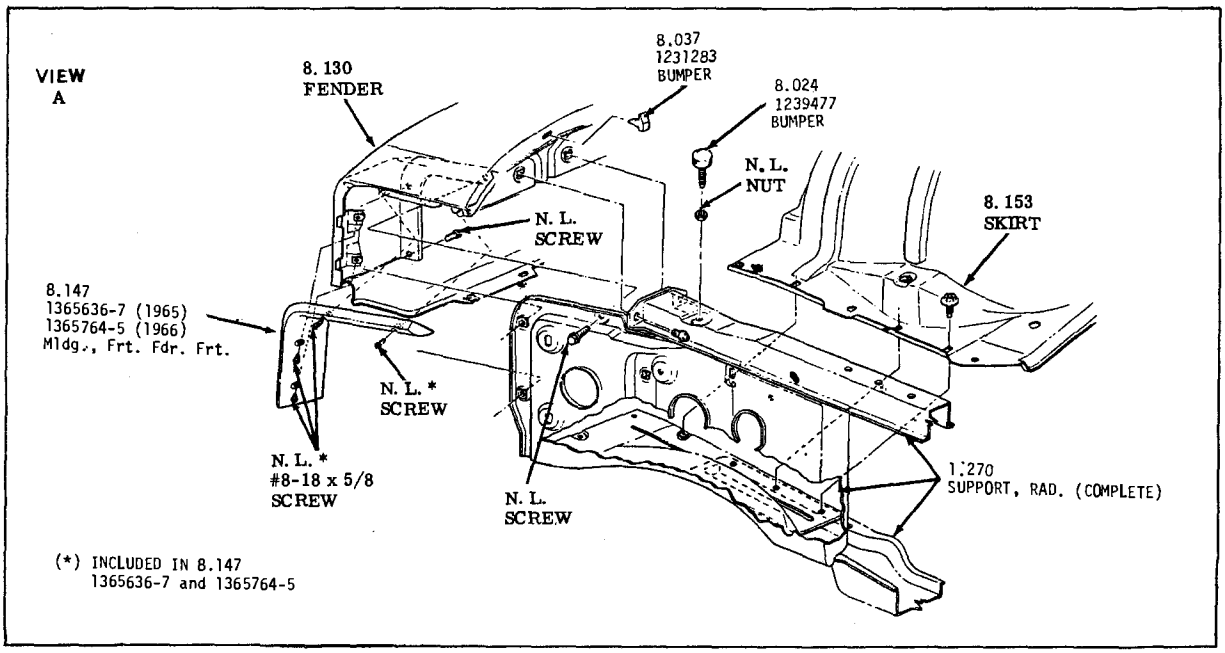

FRONT END SHEET METAL
1965-1968-LESABRE-WILDCAT-ELECTRA 225

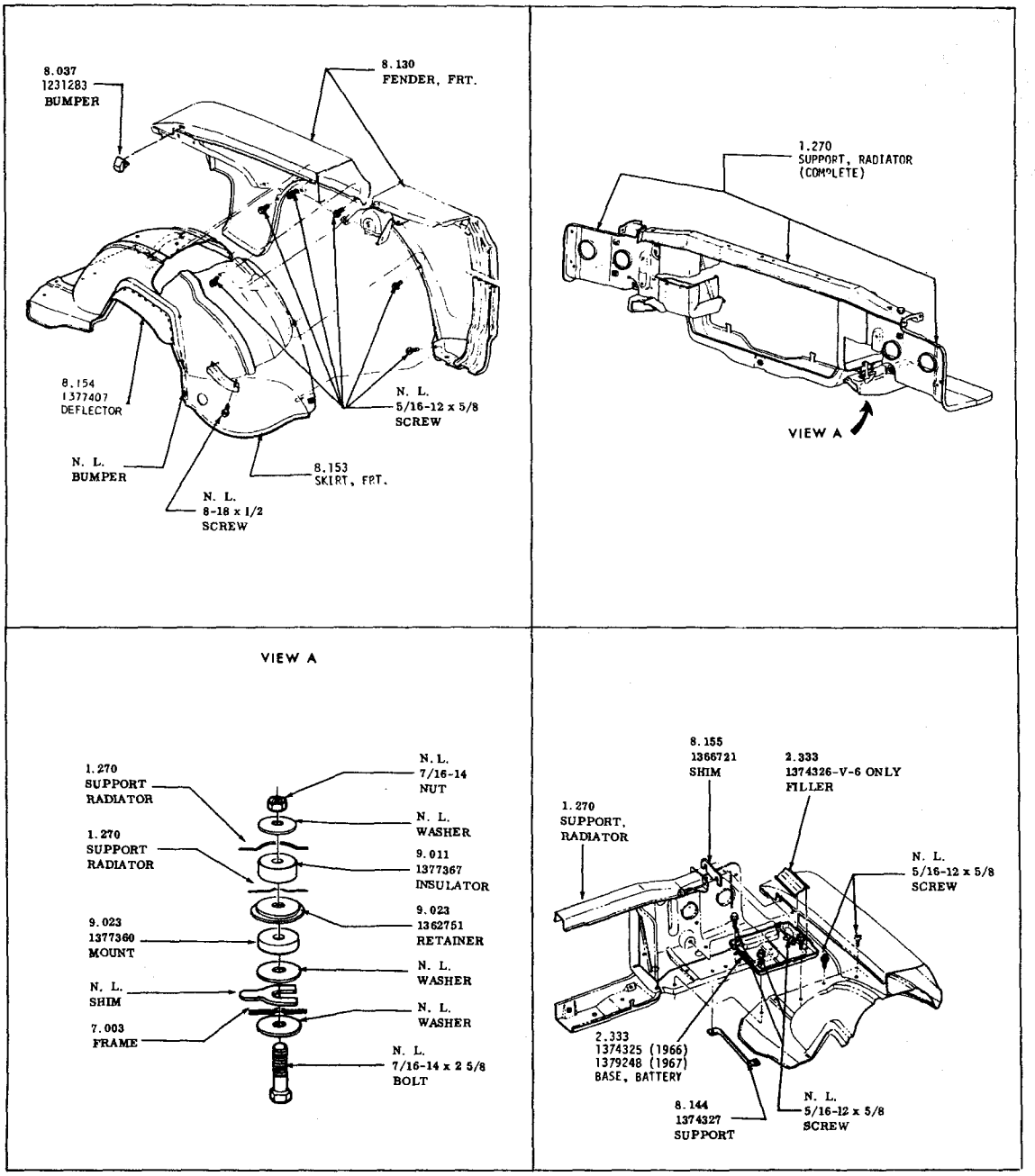

FRONT FENDER SHEET METAL
1966-1967 —SPECIAL—SKYLARK—SKYLARK GRAN SPORT

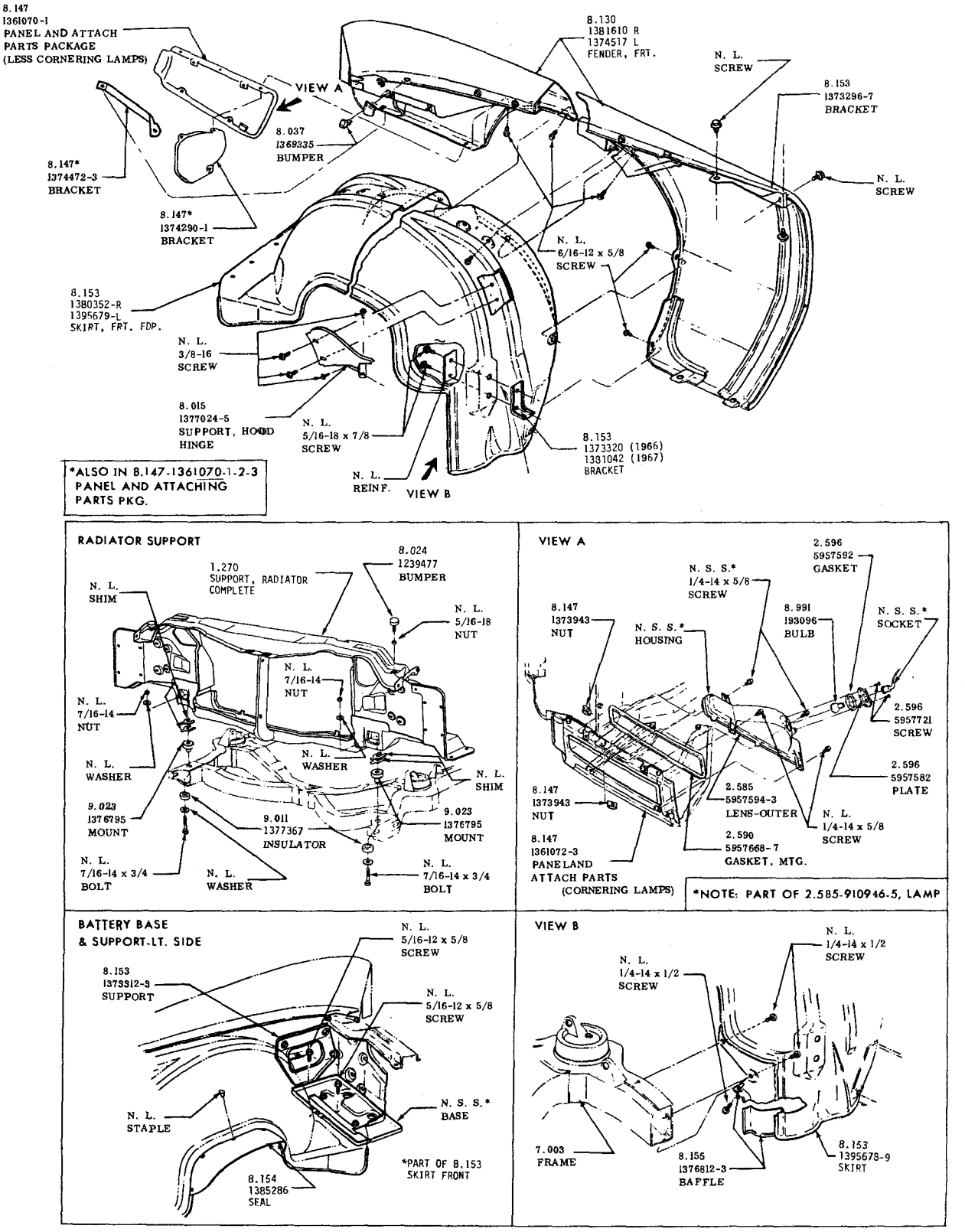

FRONT END SHEET METAL AND CORNERING LAMP
1966-1967 RIVIERA

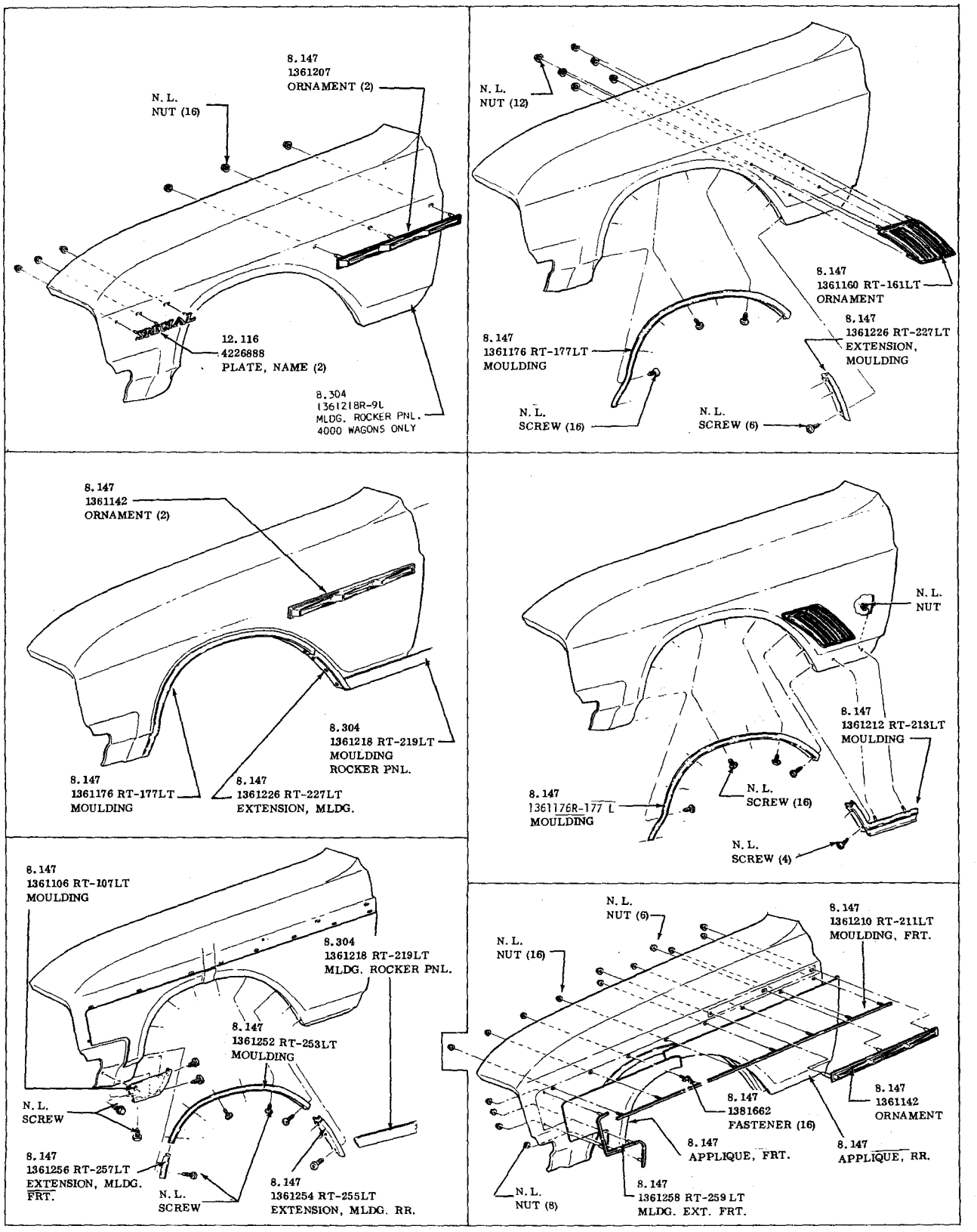

FRONT FENDER MOULDINGS AND ORNAMENTS

1967 Special—Skylark—G.S.

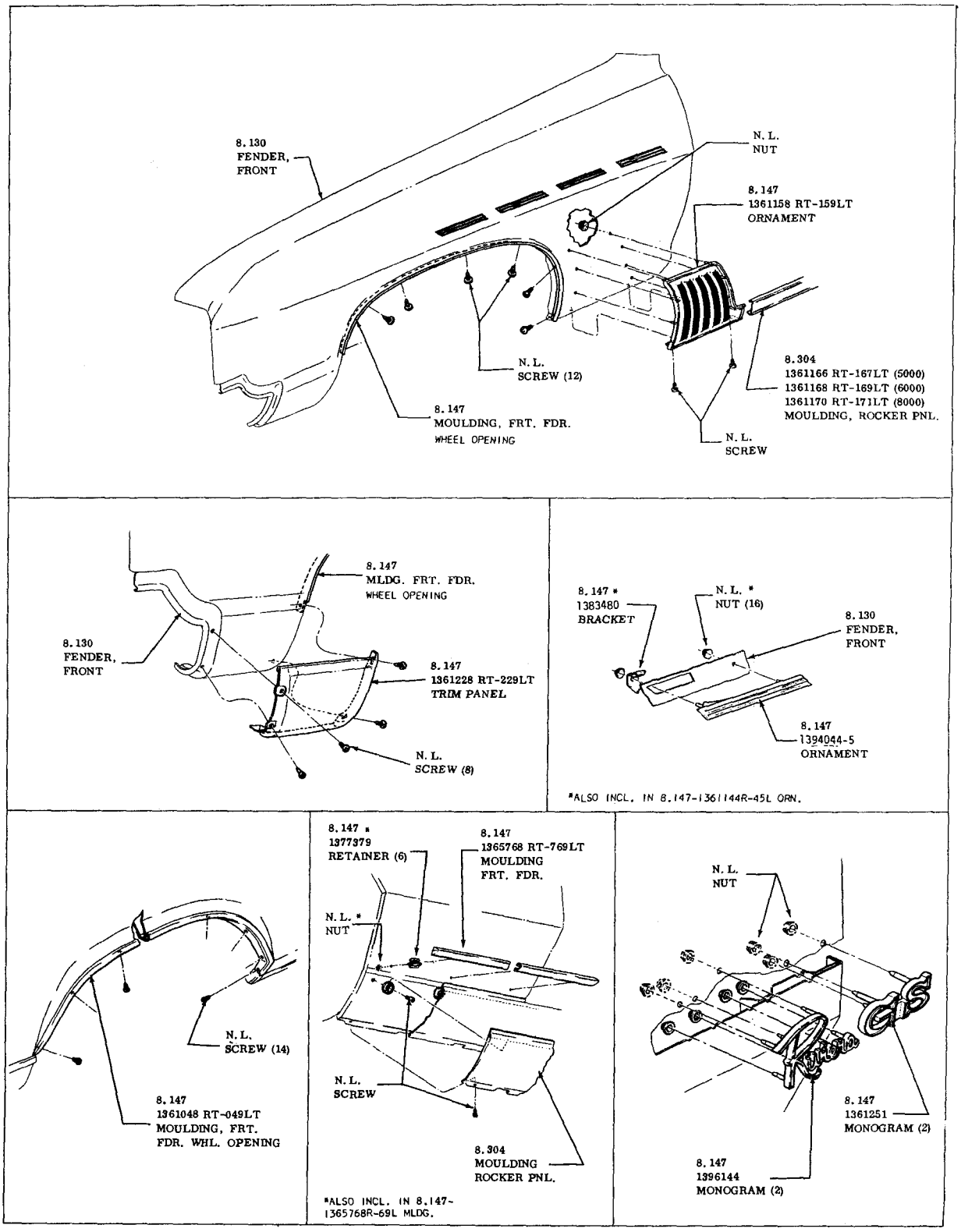

FRONT FENDER MOULDINGS AND ORNAMENTS

1967 LeSabre—Wildcat—Electra—Riviera

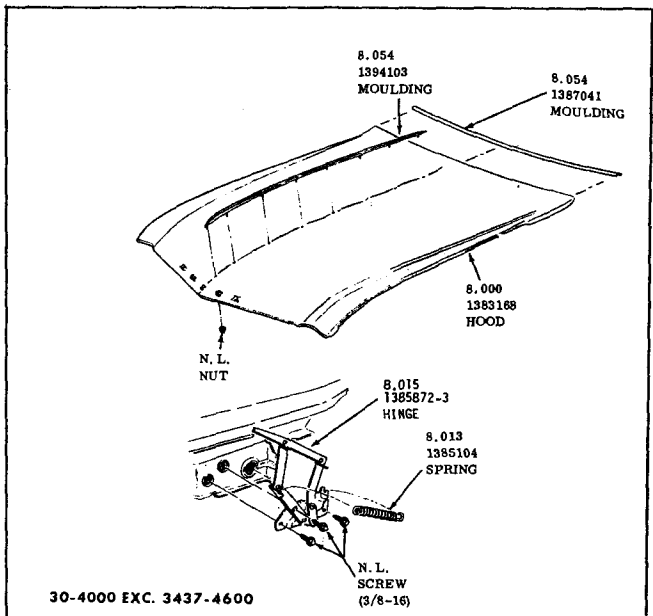

30-4000 EXC. 3437-4600

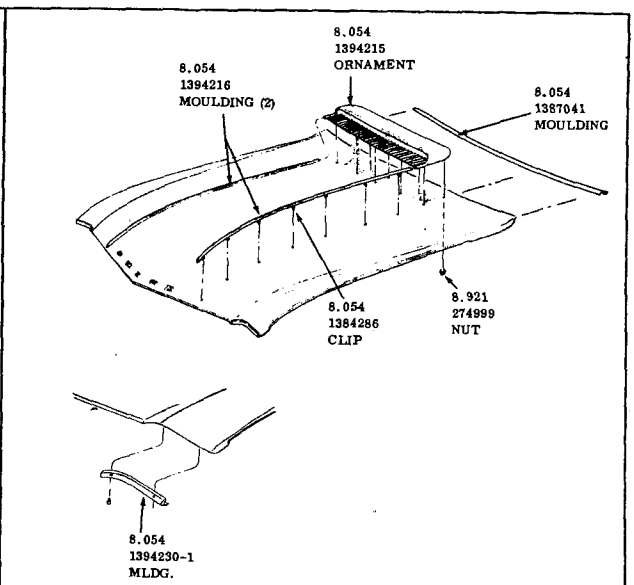

3437 -4600

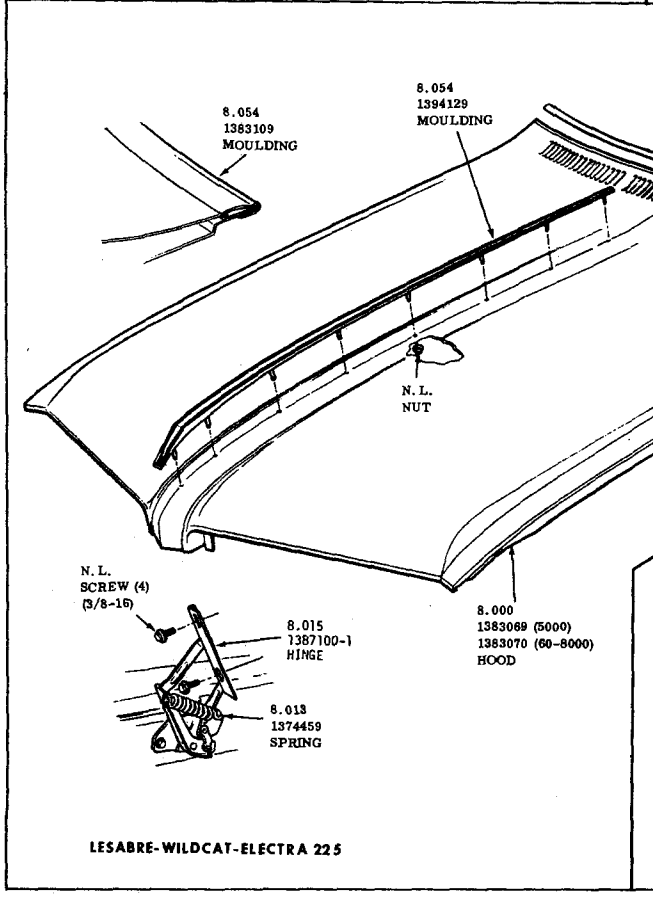

LESABRE-WILDCAT-ELECTRA 225

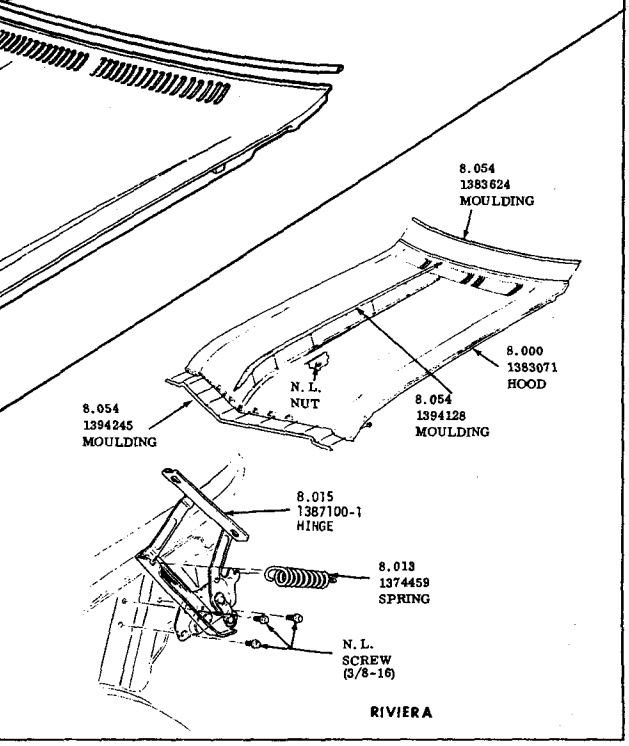

RIVIERA

HOOD
1968 ALL

MEMORANDA

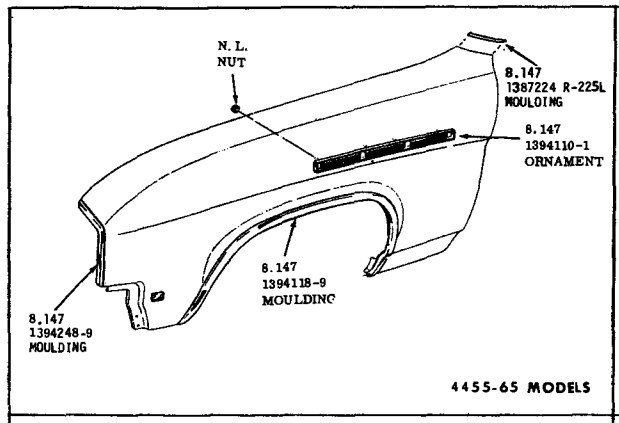

4455-65 MODELS

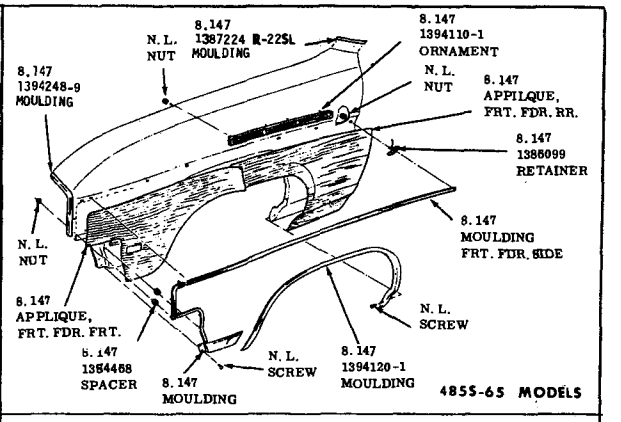

4855-65 MODELS

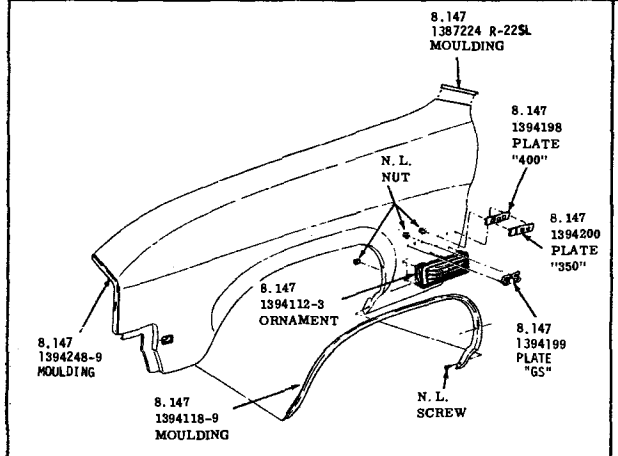

3437-4637-67 MODELS

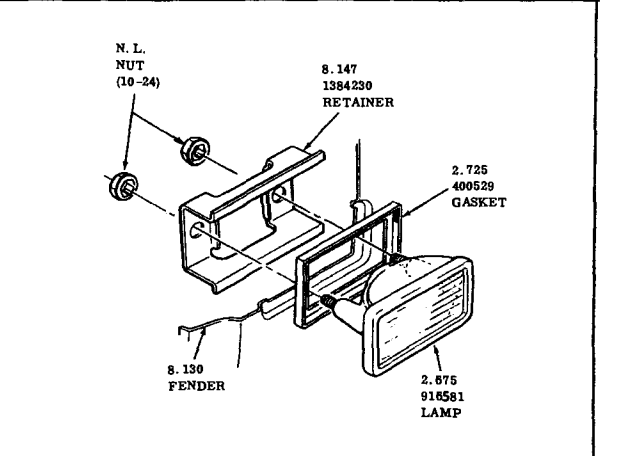

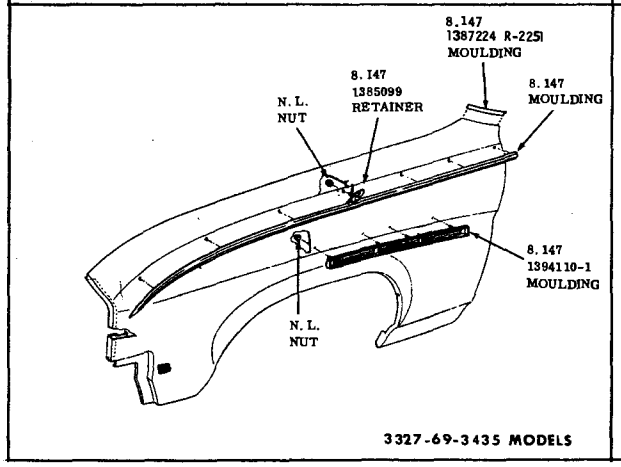

3327-69-3435 MODELS

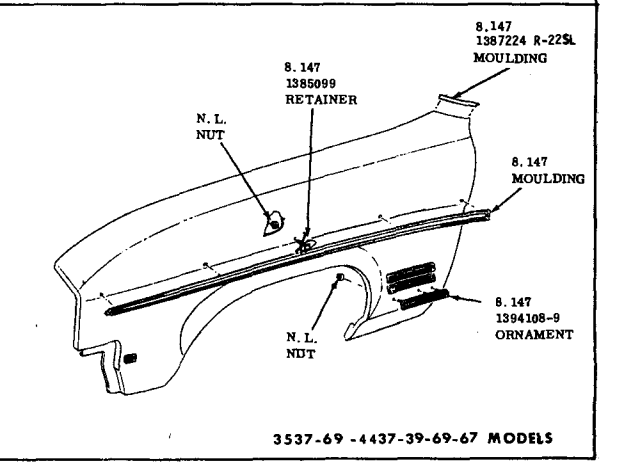

3537-69 -4437-39-69-67 MODELS

FRONT FENDER MOUNTINGS A ORNAMENTS
1968 - SPECIAL-SKYLARK-GS.

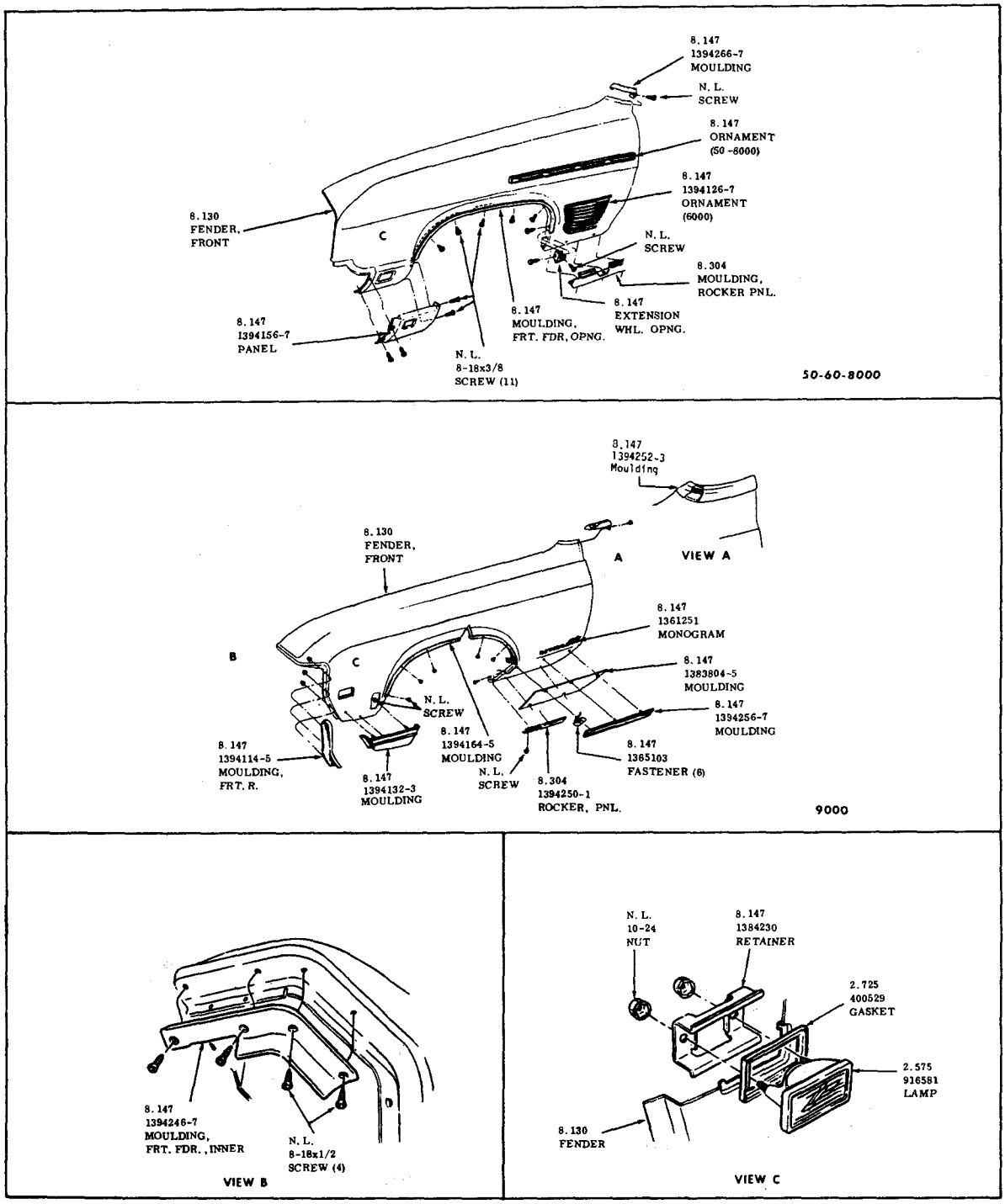

FRONT FENDER & MOLDING & ORNAMENTS
1968 - 50-60-80-9000

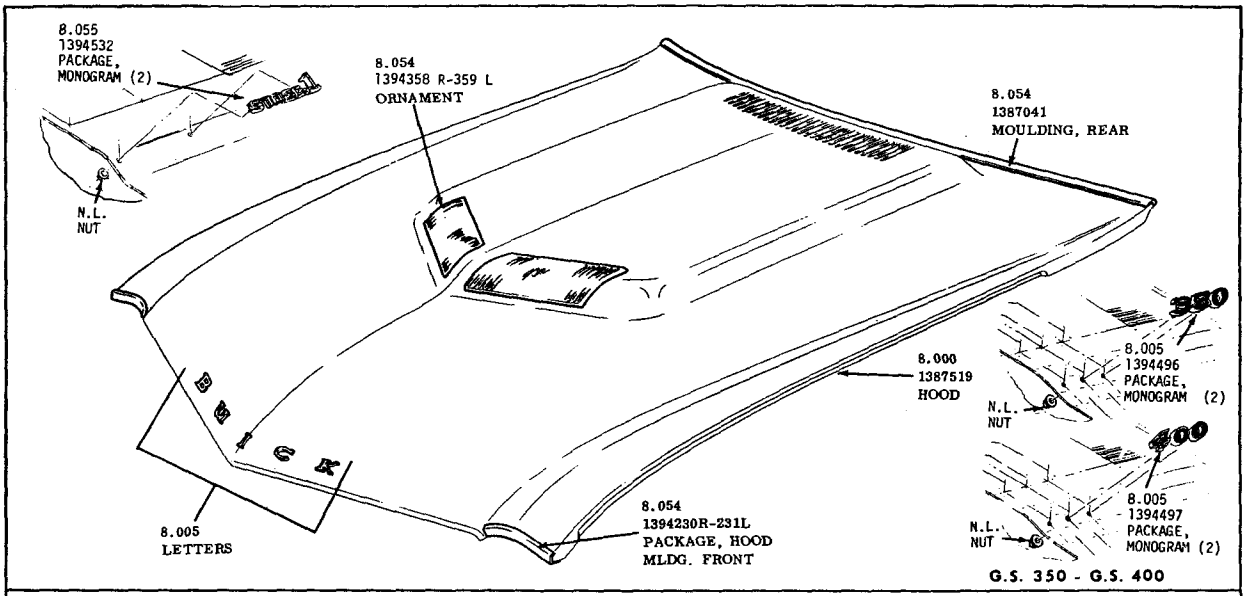

G.S. 350 - G.S. 400

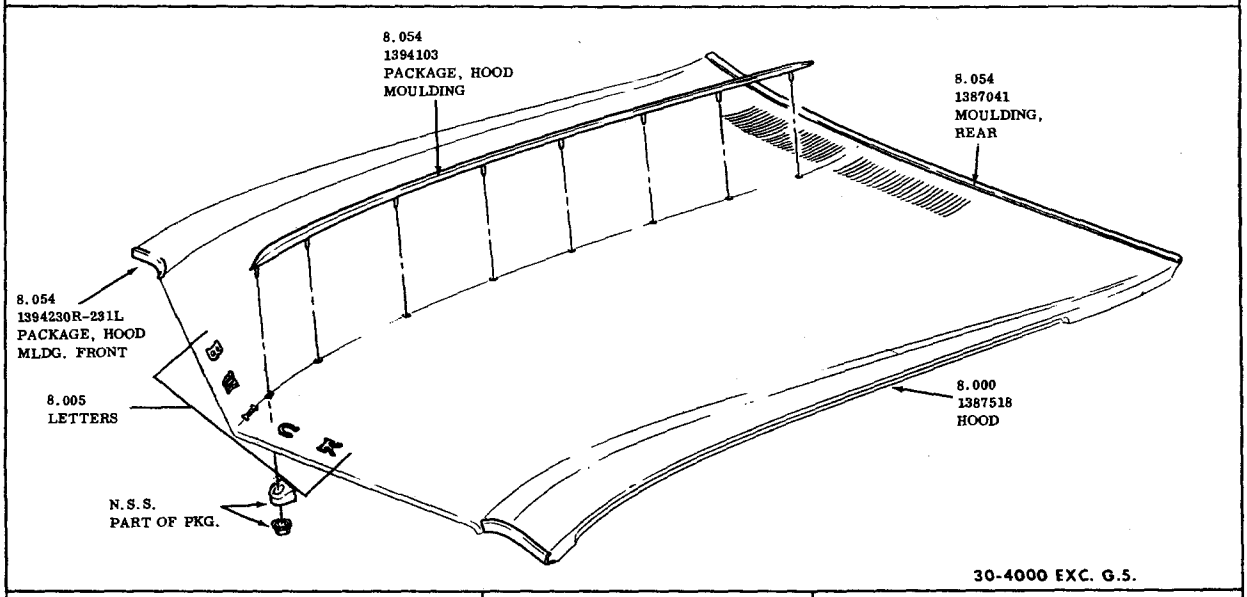

30-4000 EXC. G.S.

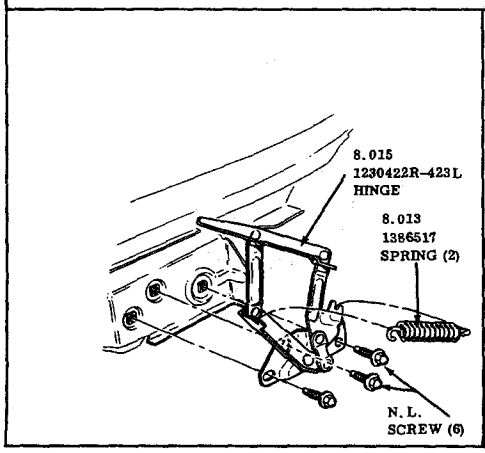

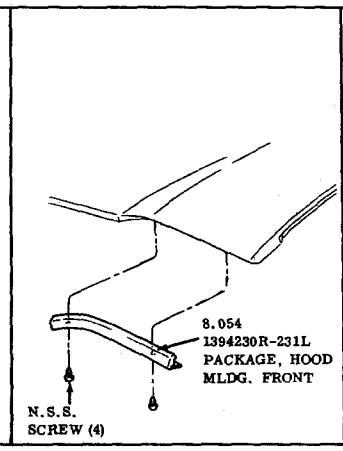

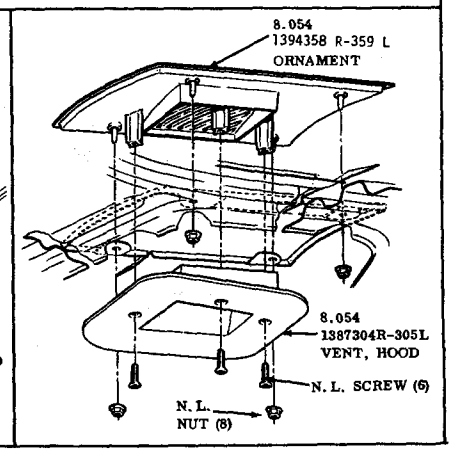

HOOD
1969 30-4000

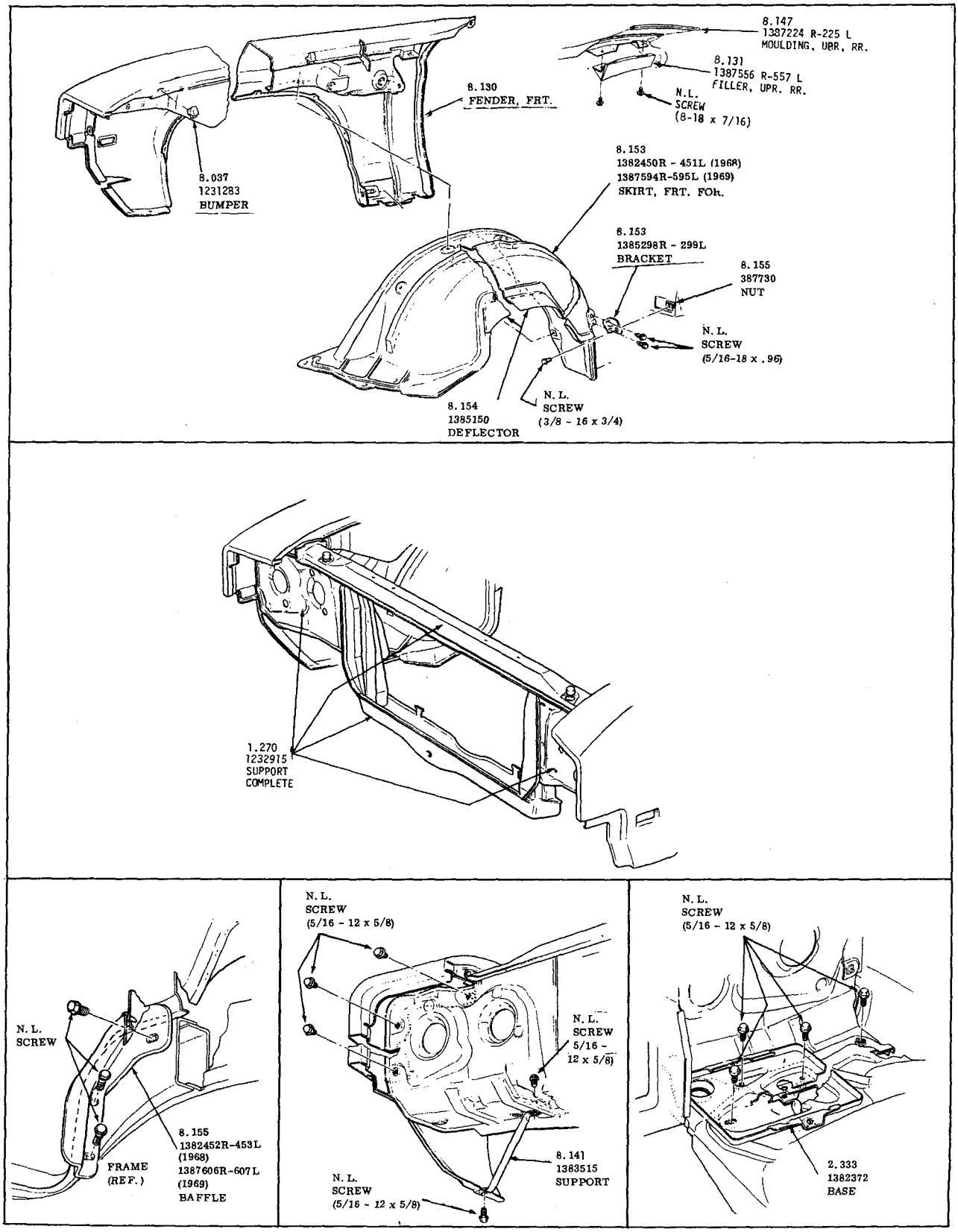

FRONT FENDER AND SHEET METAL
1968-69-30-4000

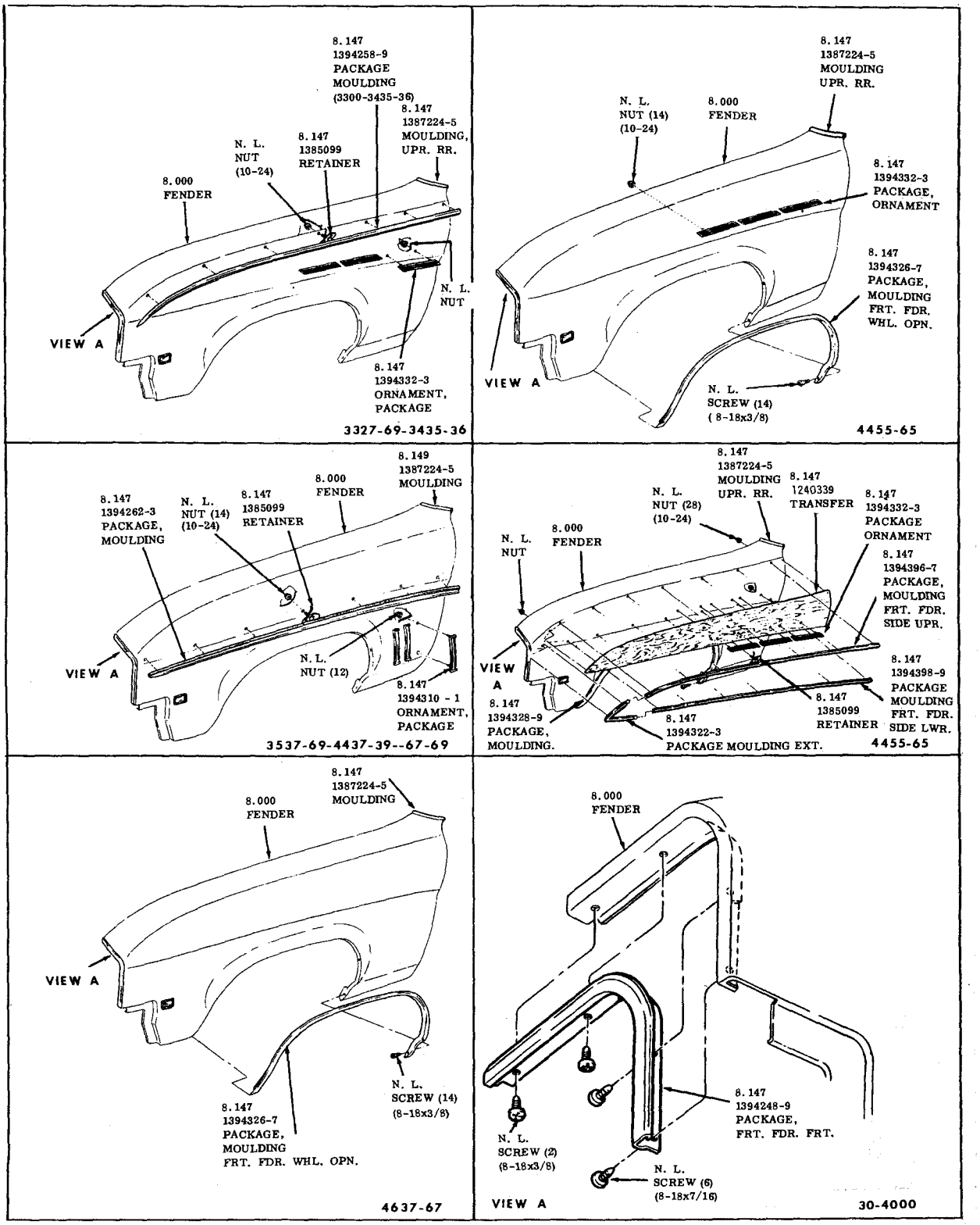

FRONT FENDER MOULDING & ORNAMENT
1969 30-4000

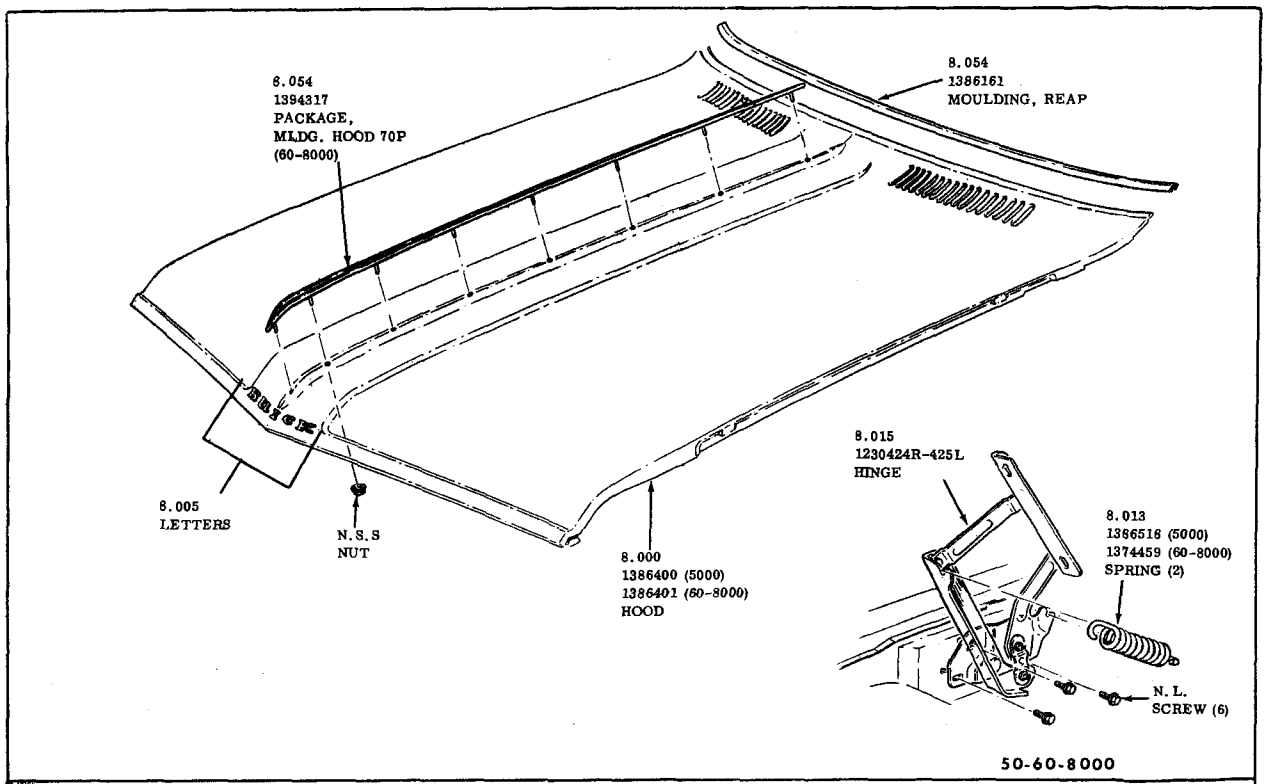

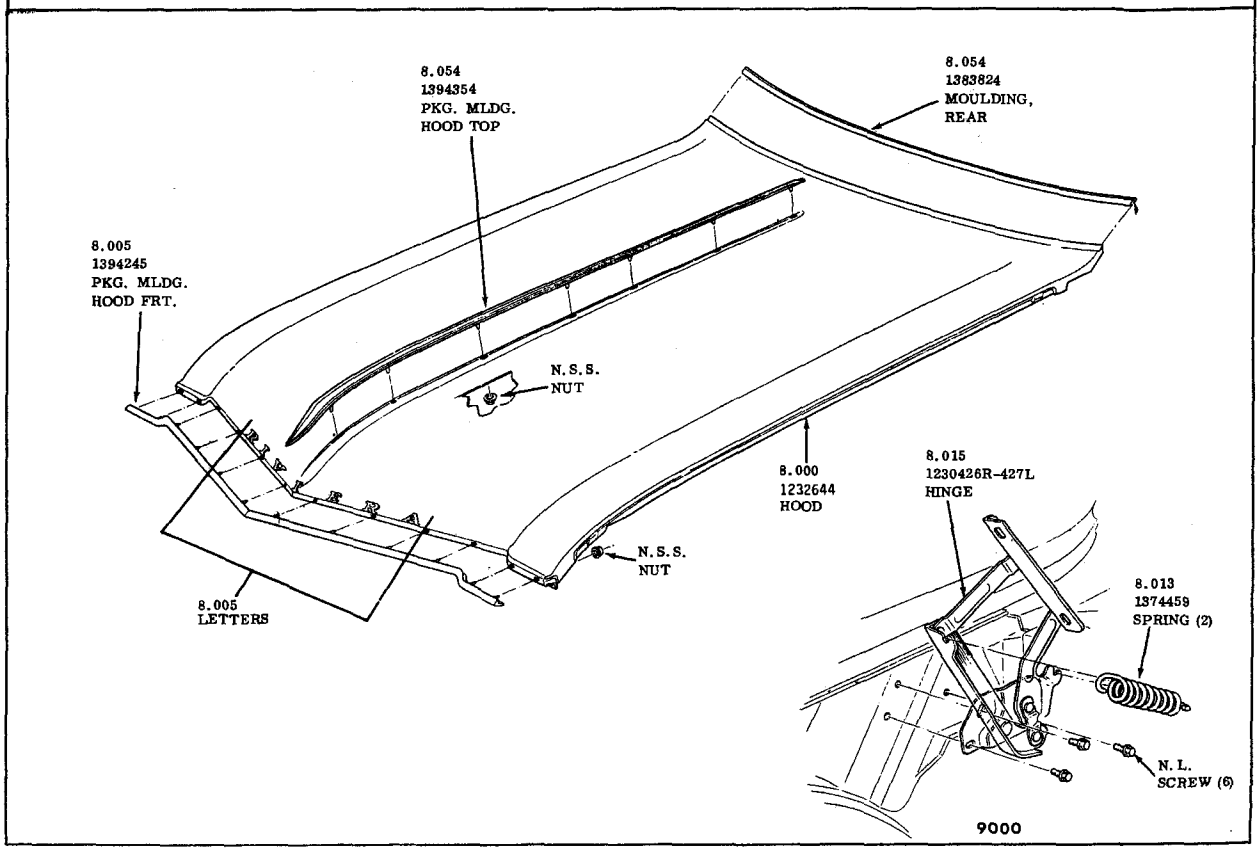

HOOD
1969-50-60-80-9000

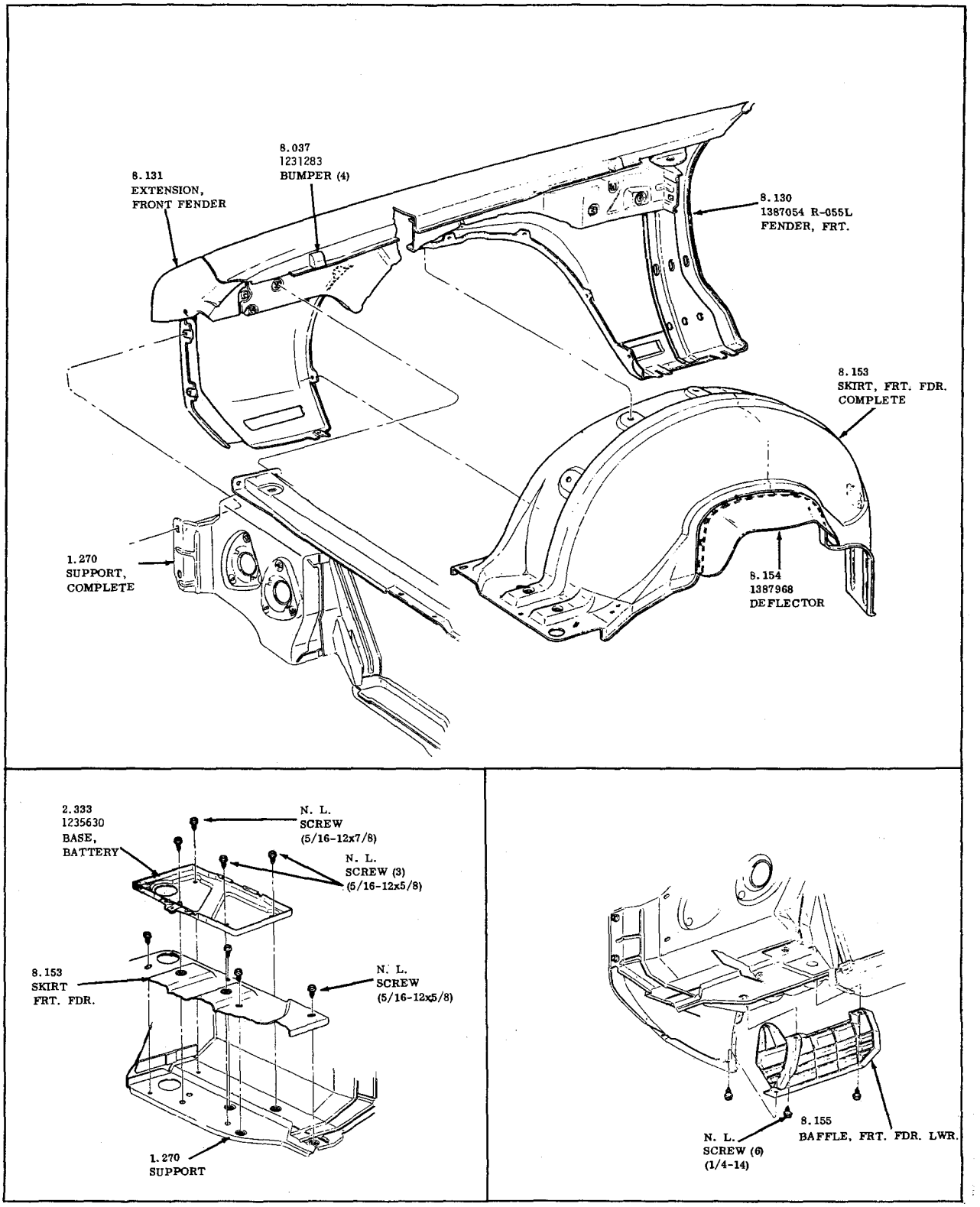

FRONT END SHEET METAL
1969-50-60-8000

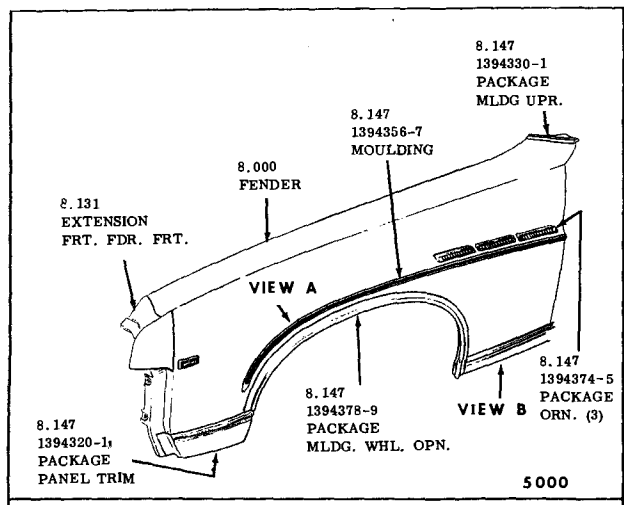

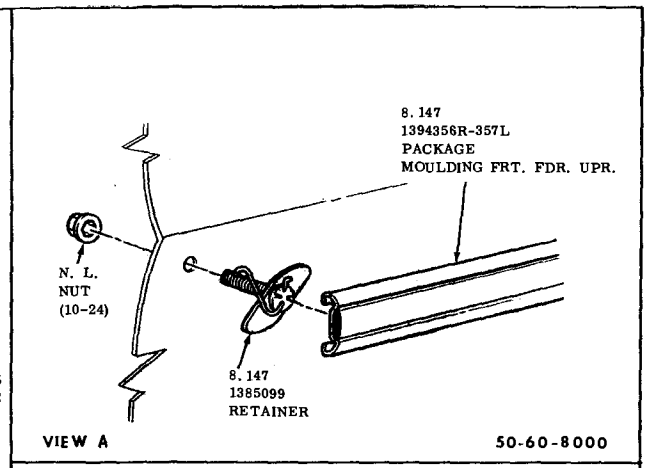

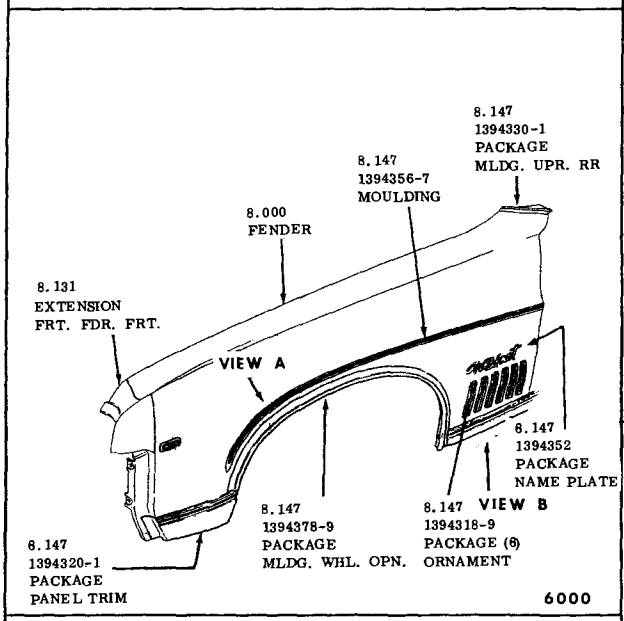

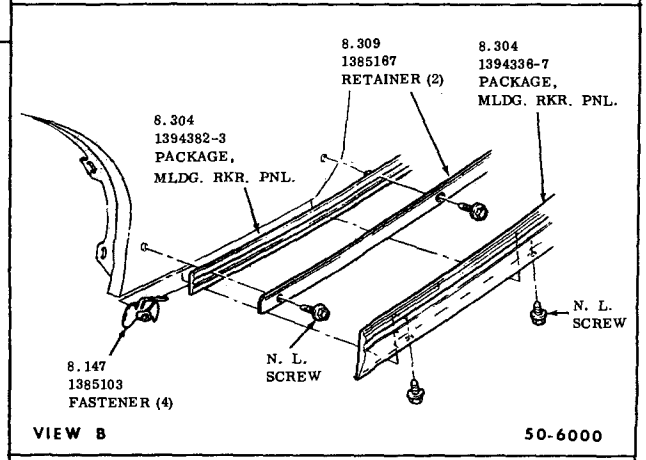

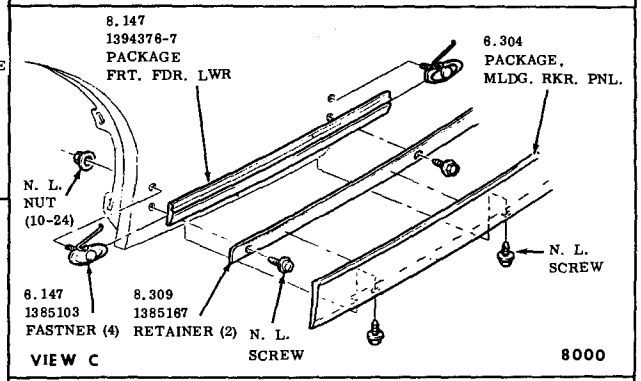

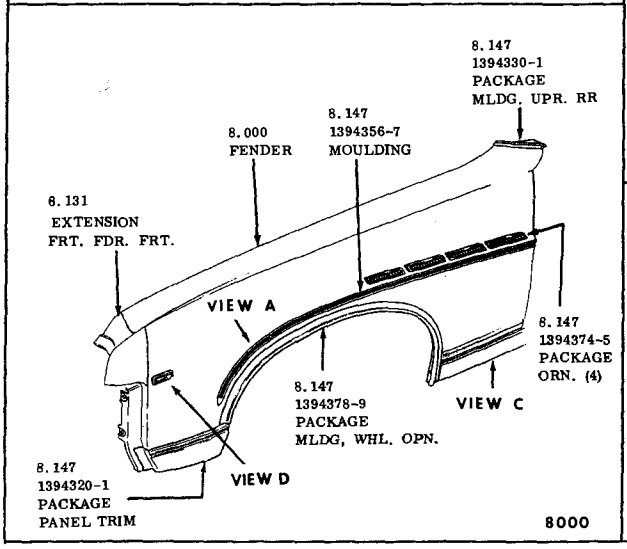

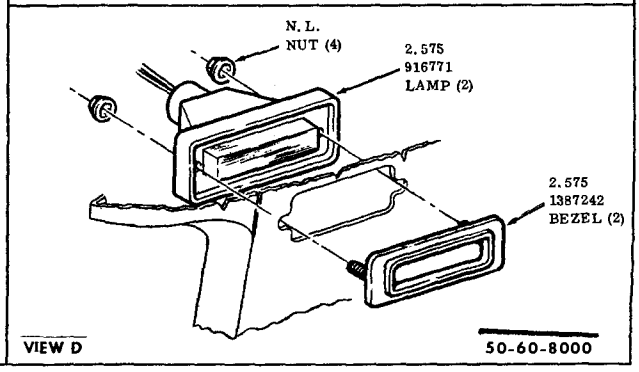

FRONT FENDER MOULDING & ORNAMENT
1969 50-60-8000

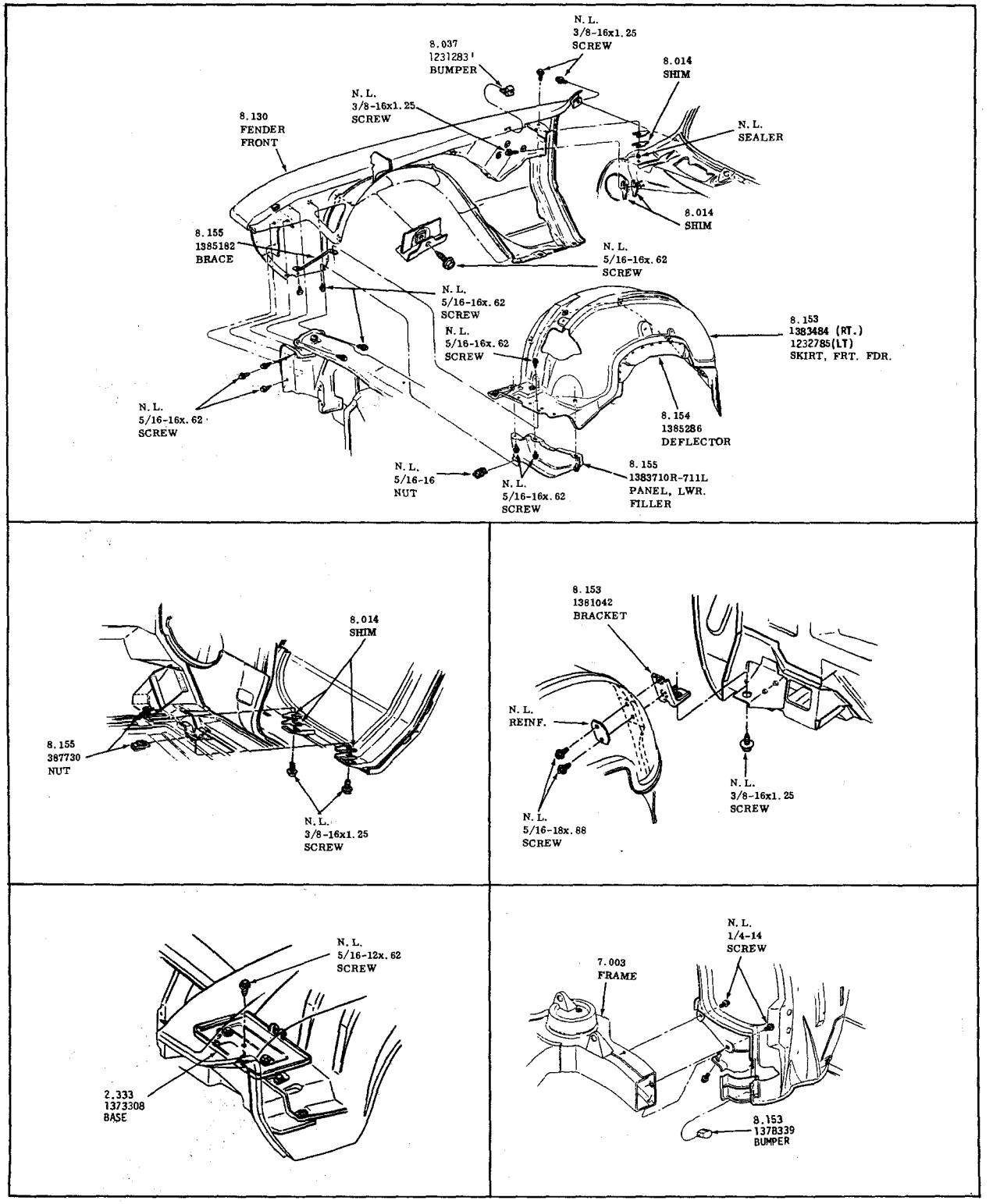

FRONT END SHEET METAL
1968-69 RIVIERA

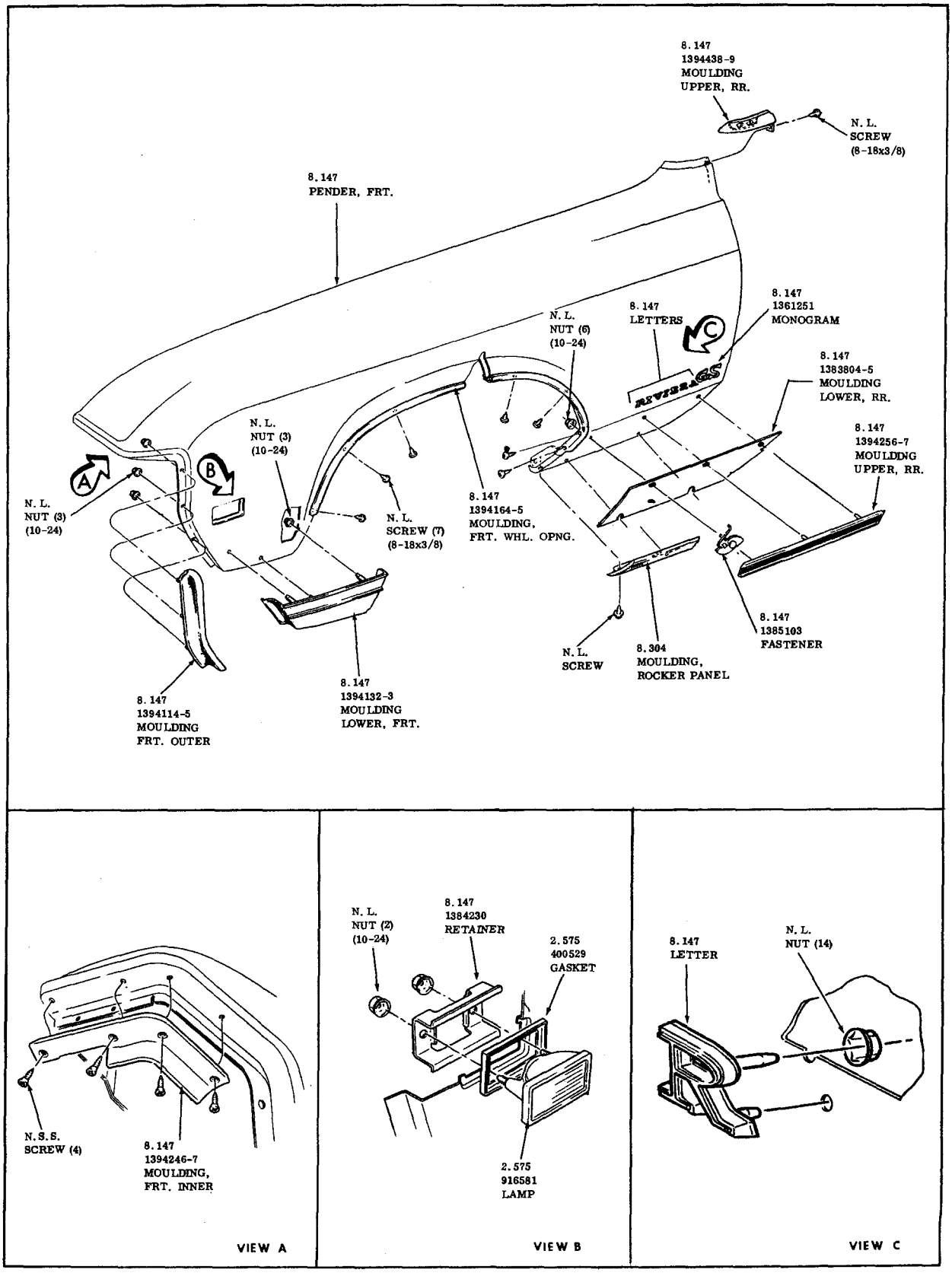

FRONT FENDER & MOULDINGS
1969 – 9000

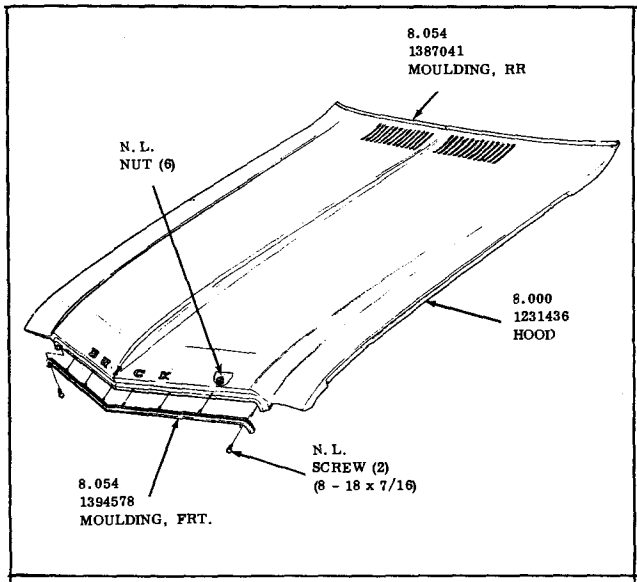

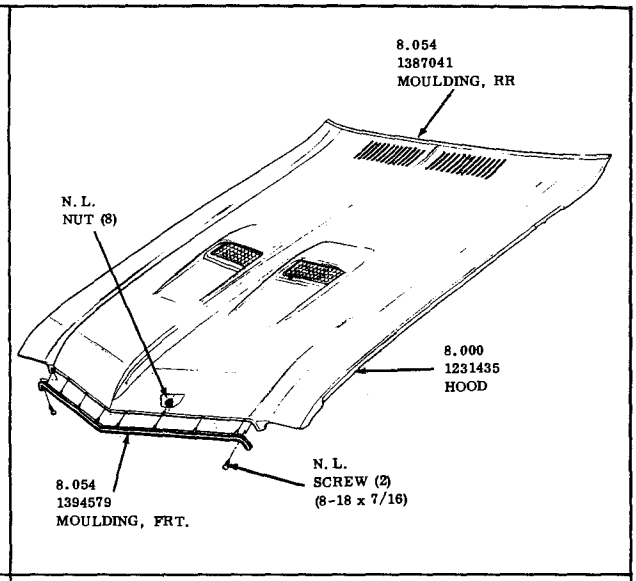

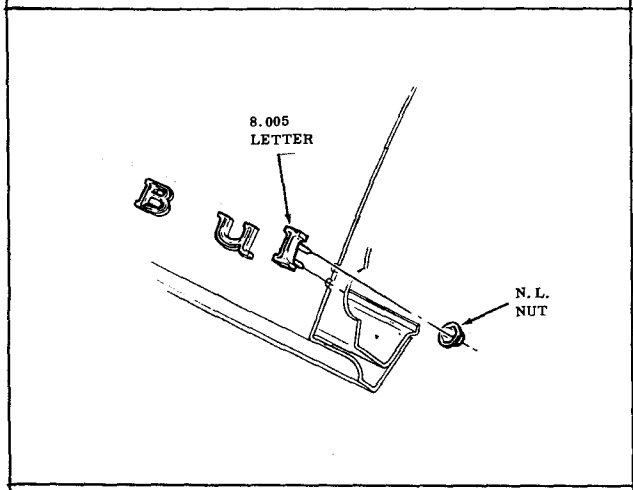

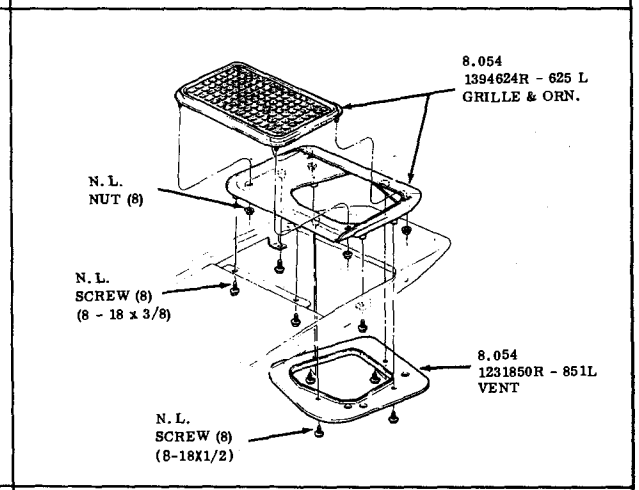

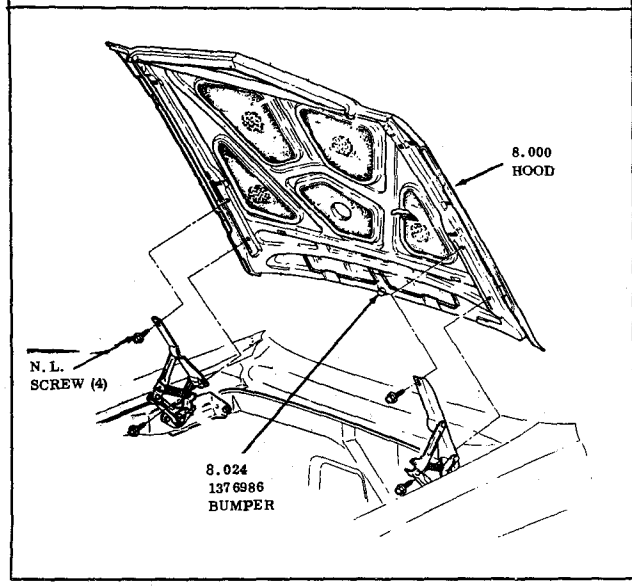

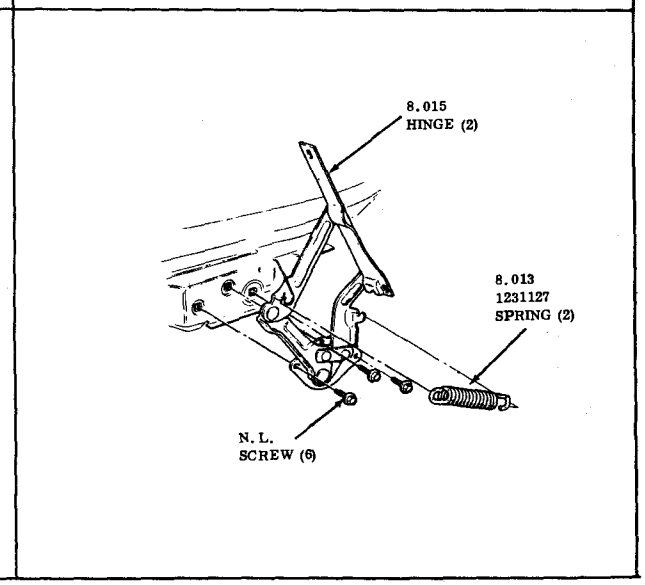

HOOD
1970-30-4000

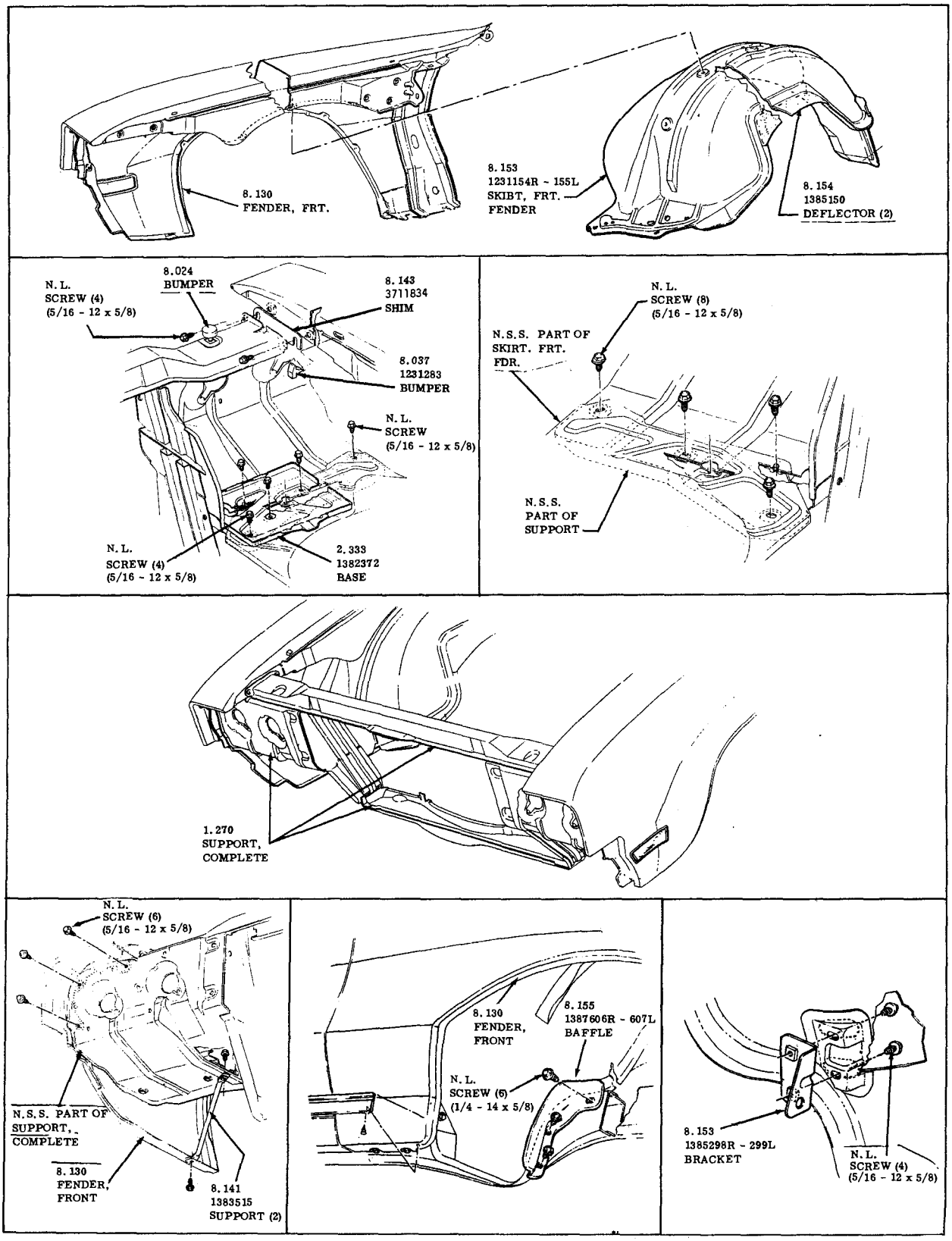

FRONT FENDER AND SHEET METAL

1970-30-4000

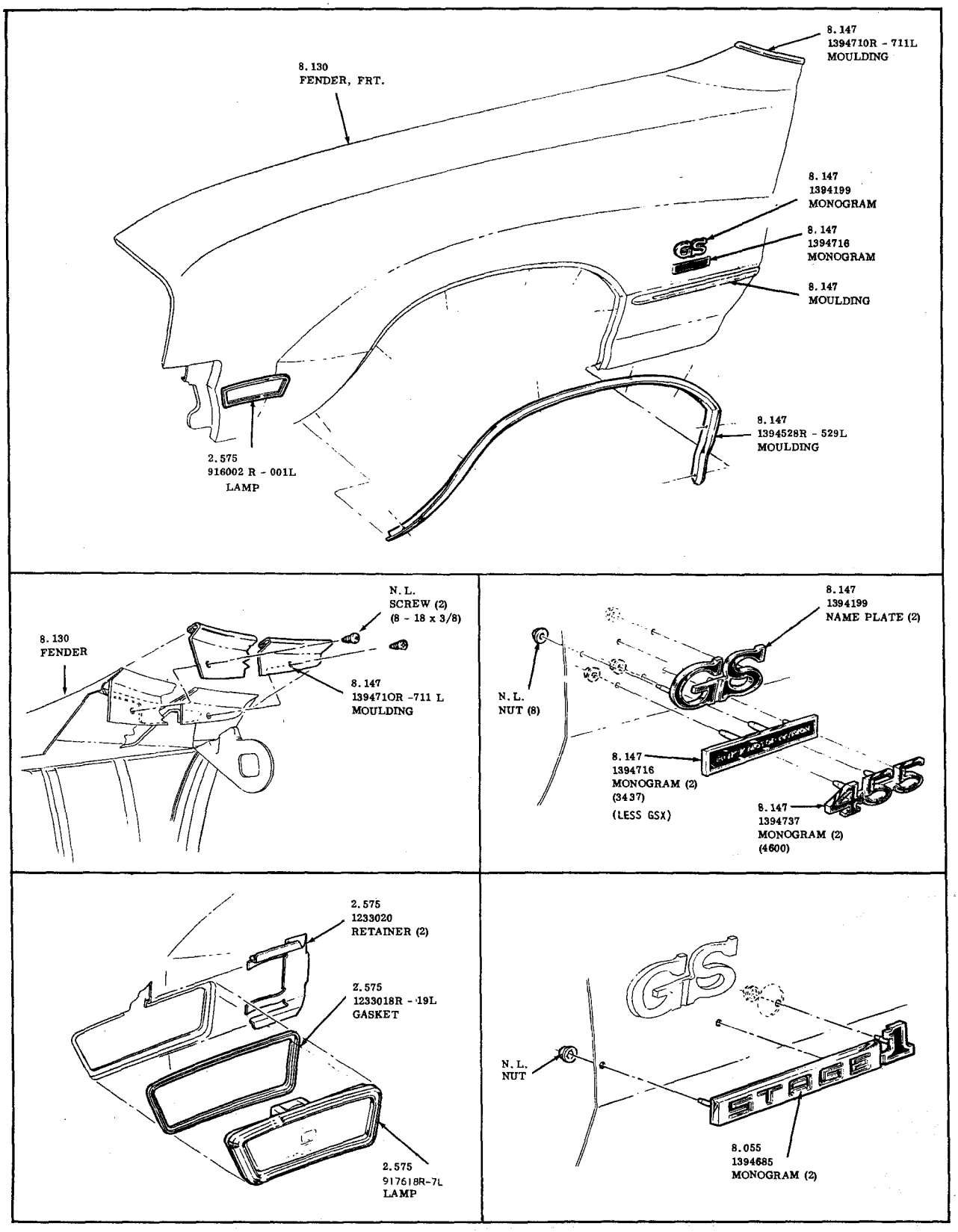

FRONT FENDER MOULDING AND ORNAMENT
1970-30-4000

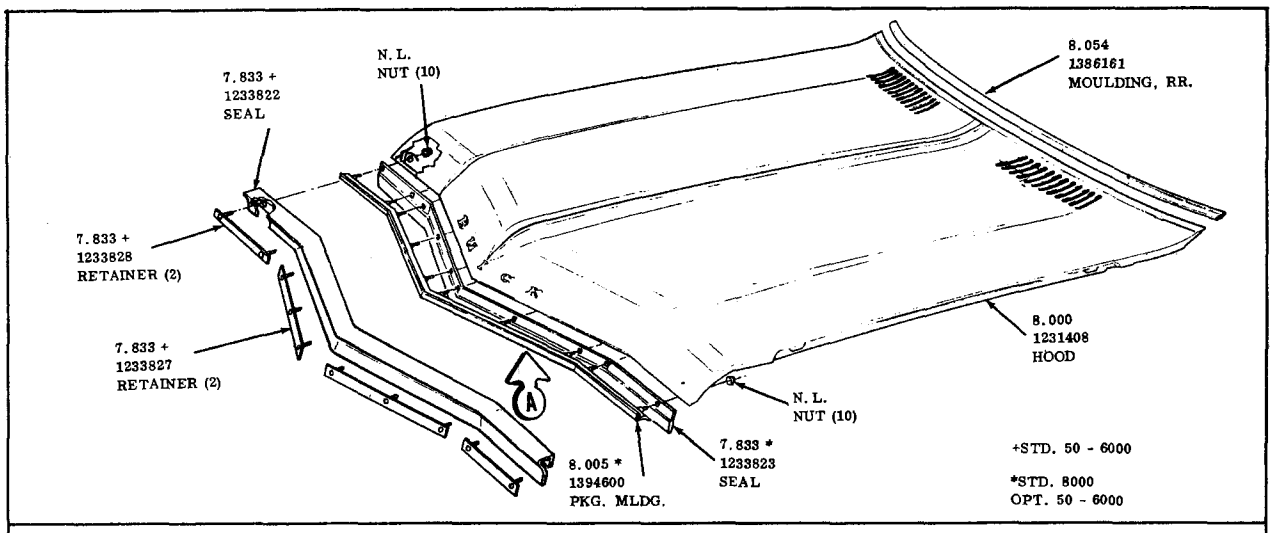

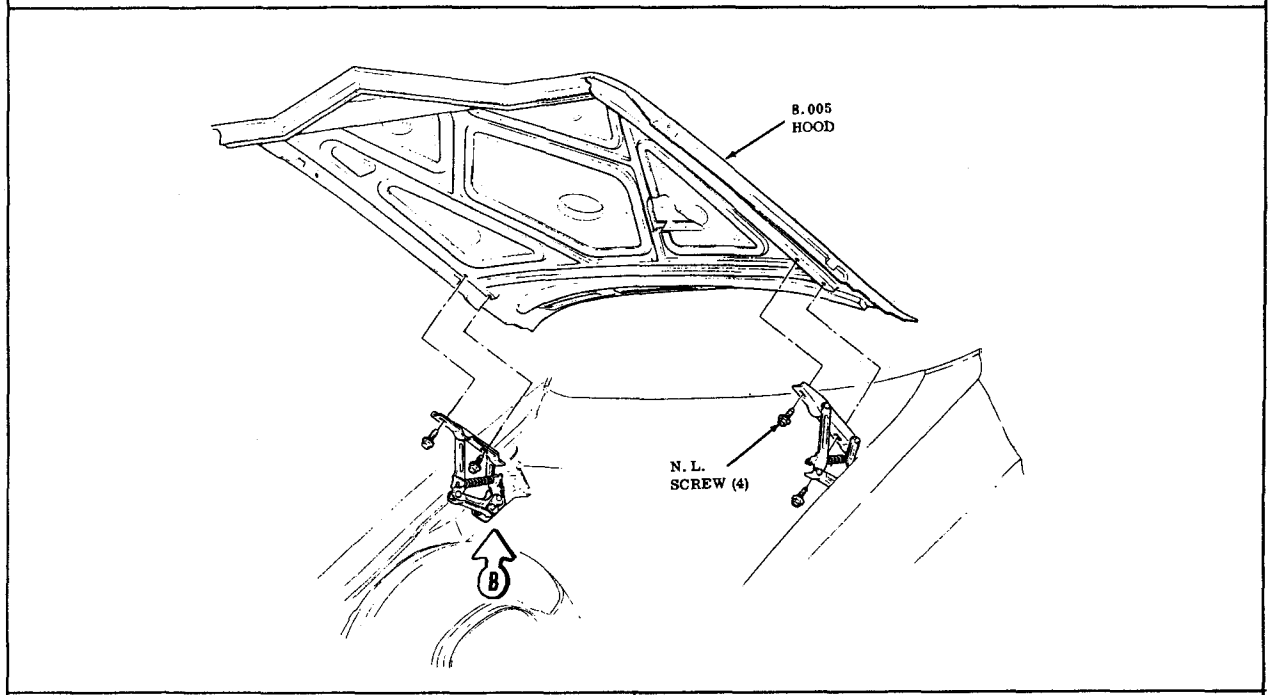

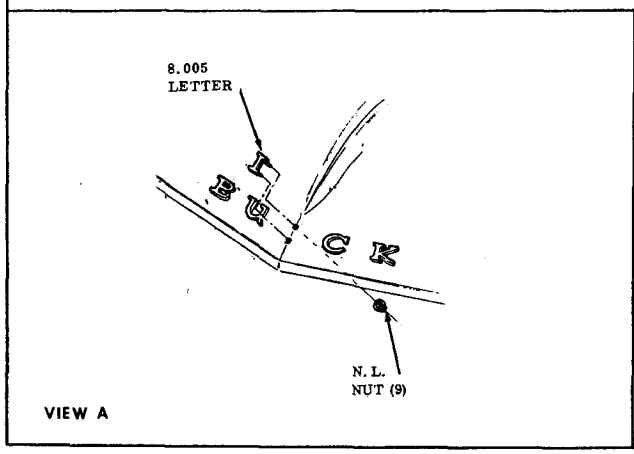

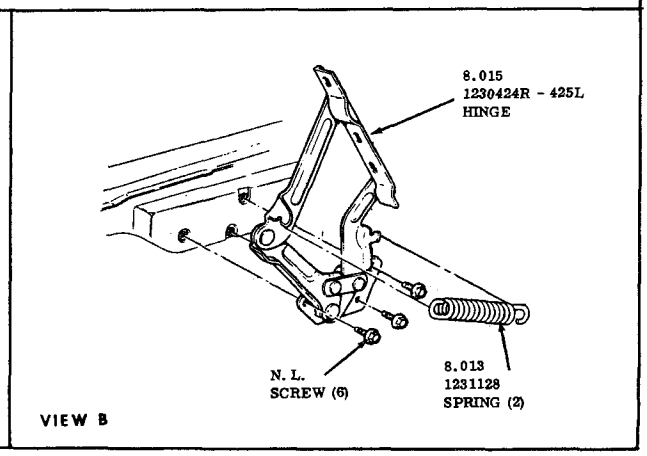

HOOD

1970-50-60-8000

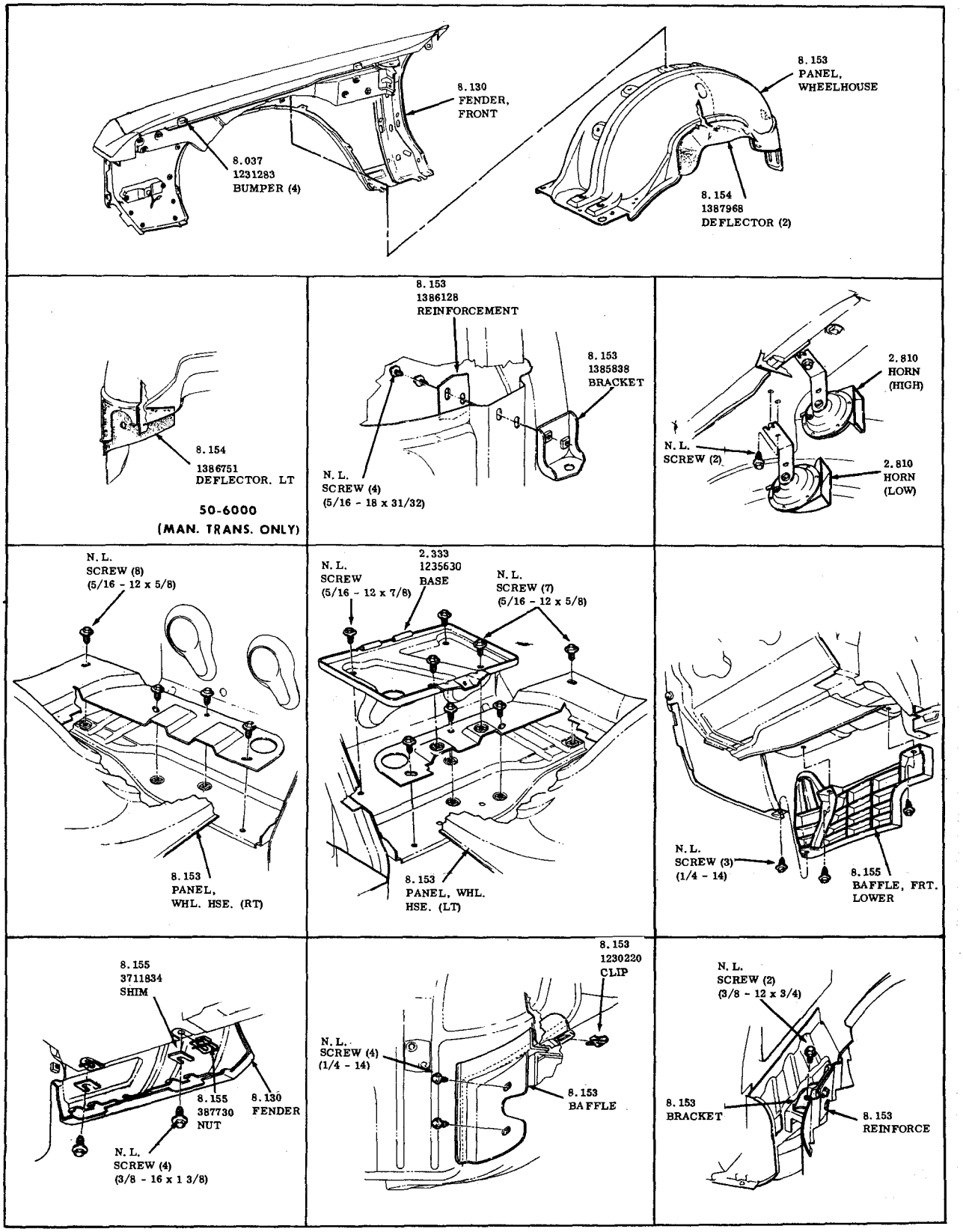

FRONT END SHEET METAL
1970-50-60-8000

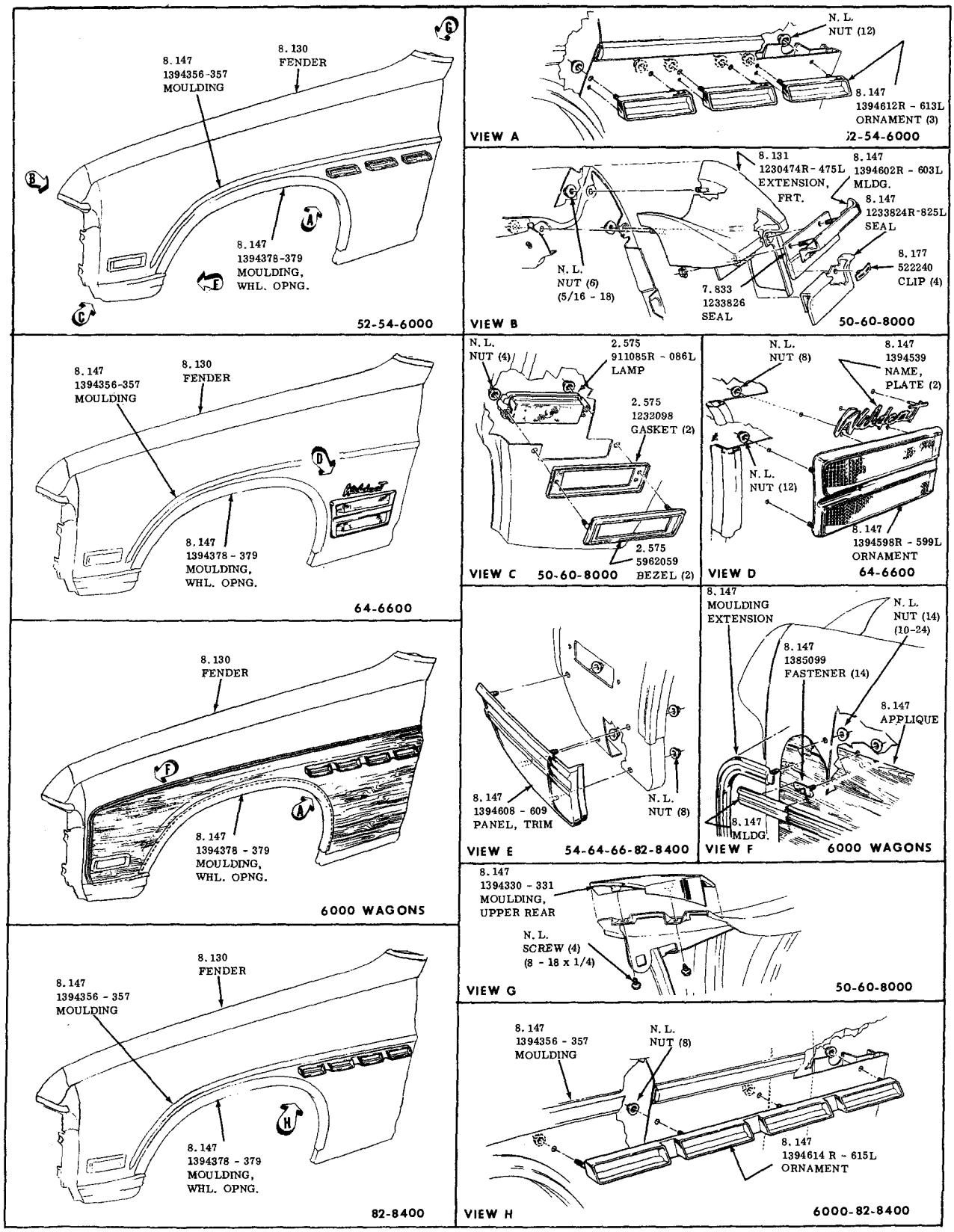

FRONT FENDER & MOULDINGS
1970-50-60-8000

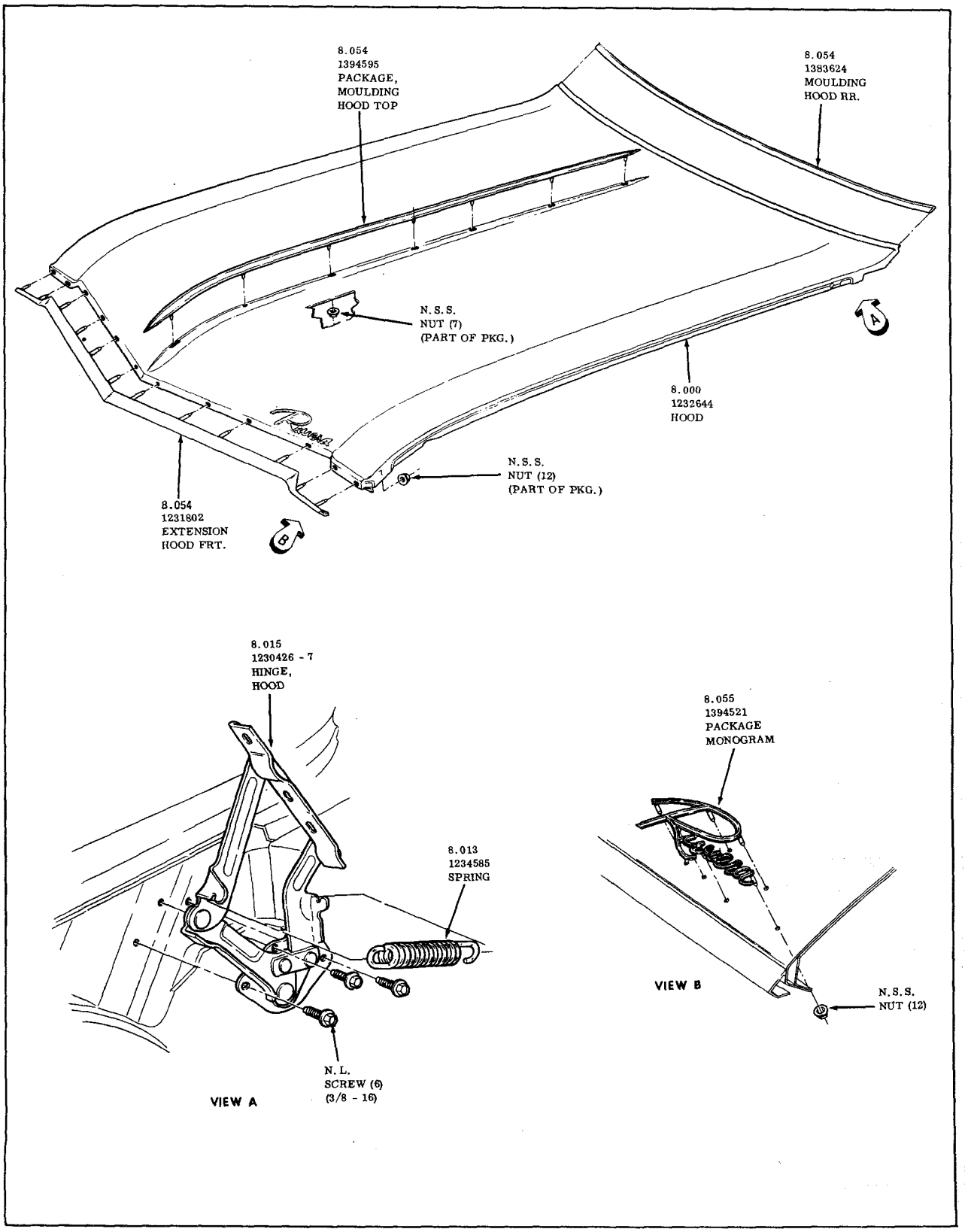

HOOD
1970-9000

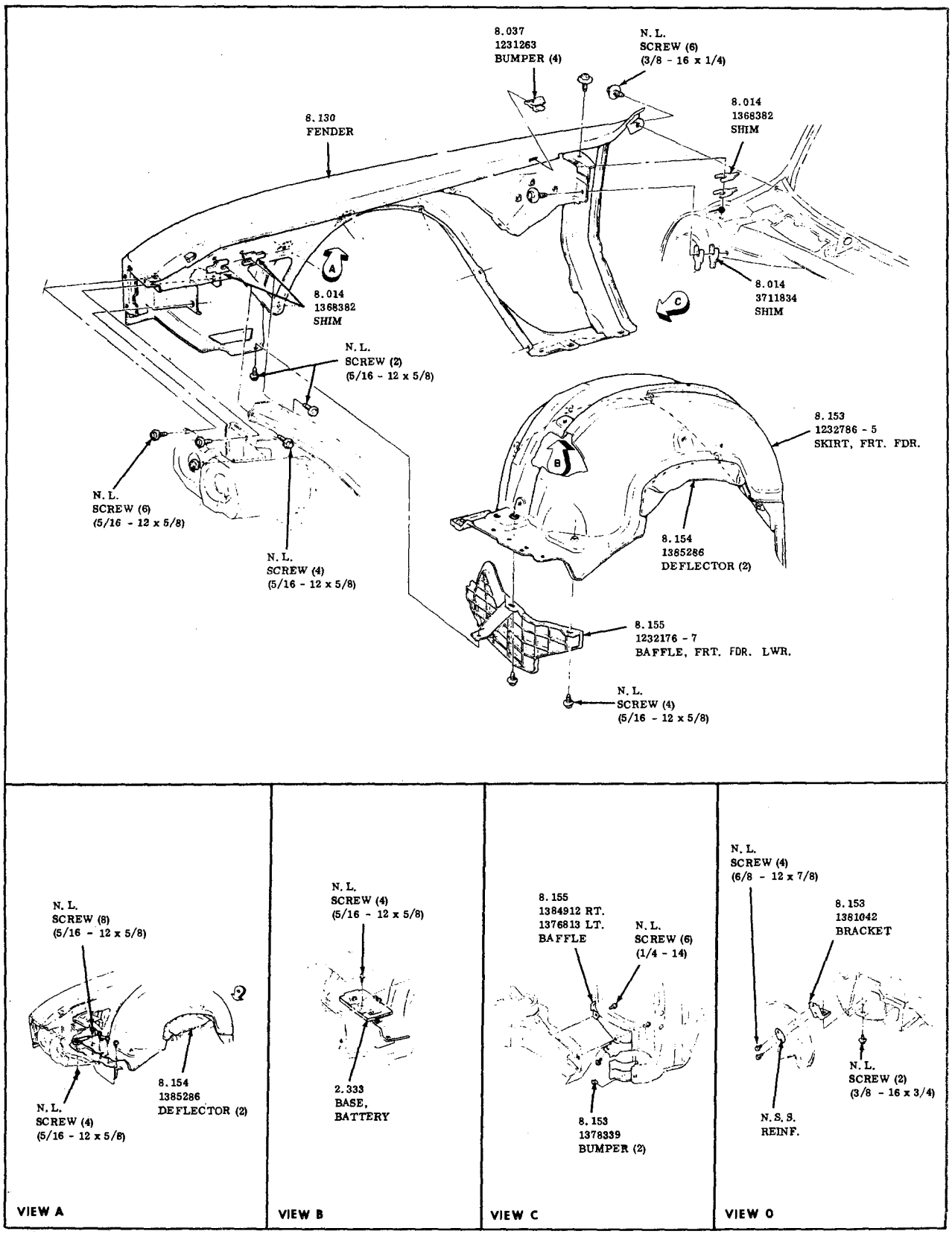

FRONT FENDER SHEET METAL
1970-9000

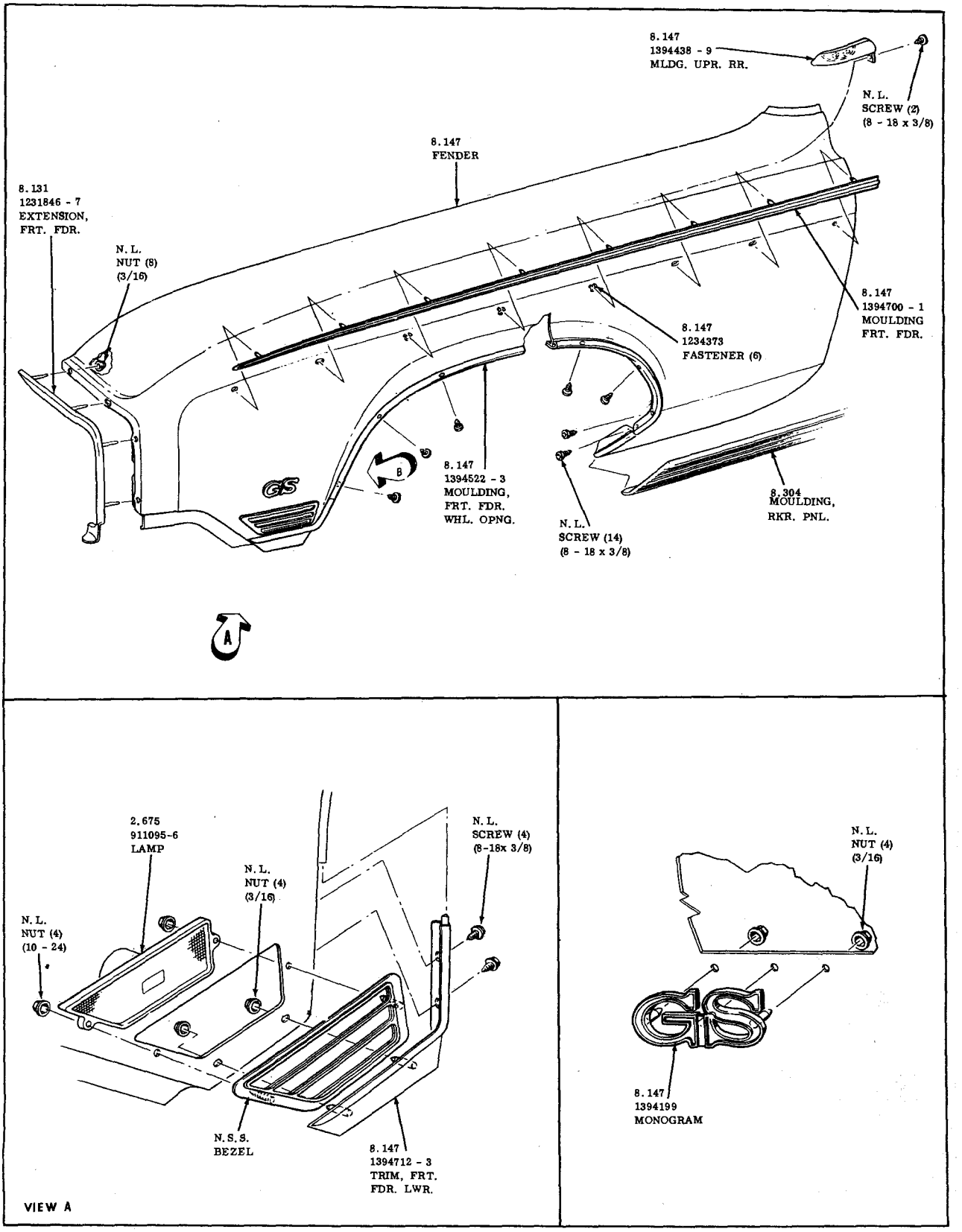

FRONT FENDER & MOULDINGS
1970-9000

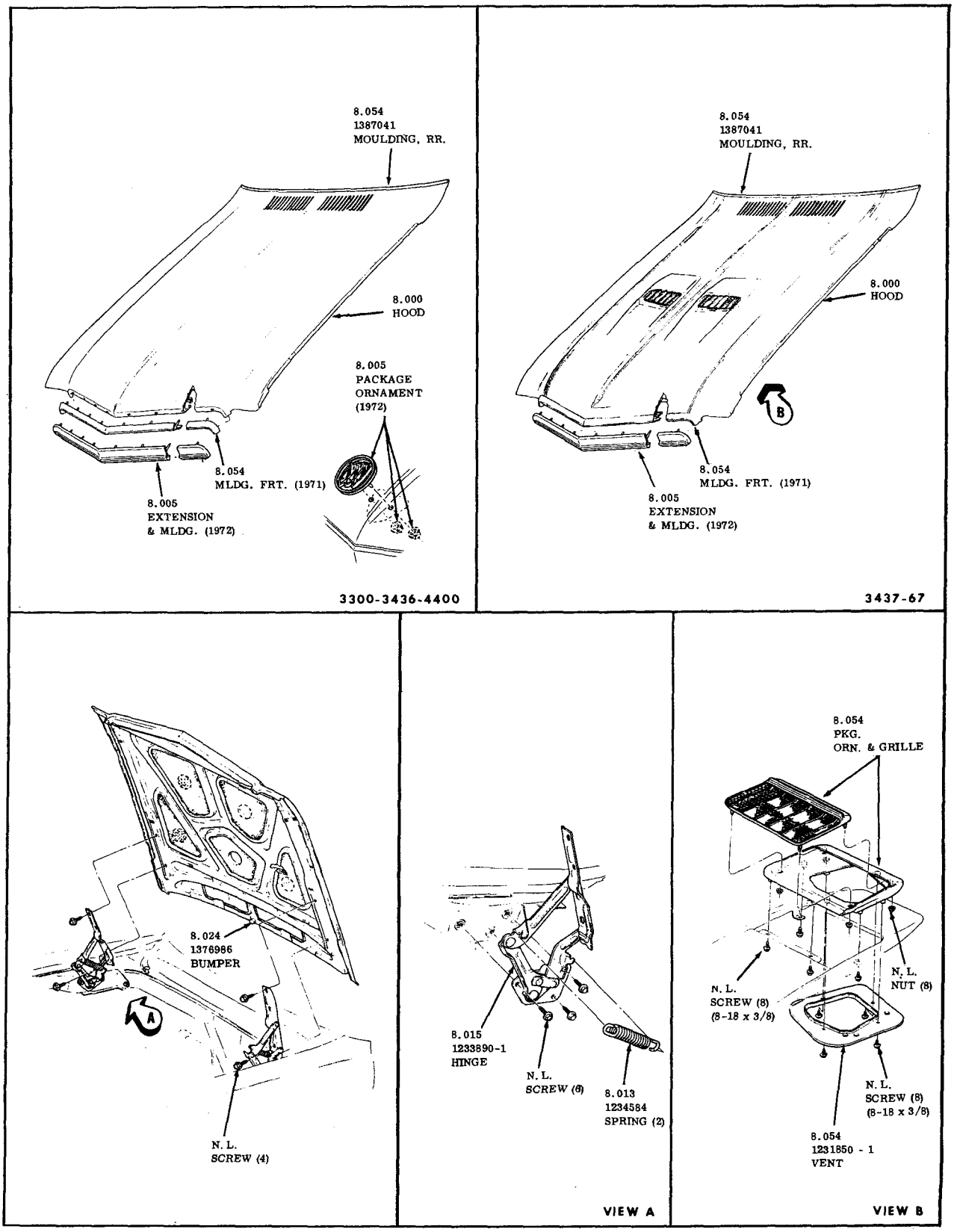

HOOD

1971-1972 30—4000

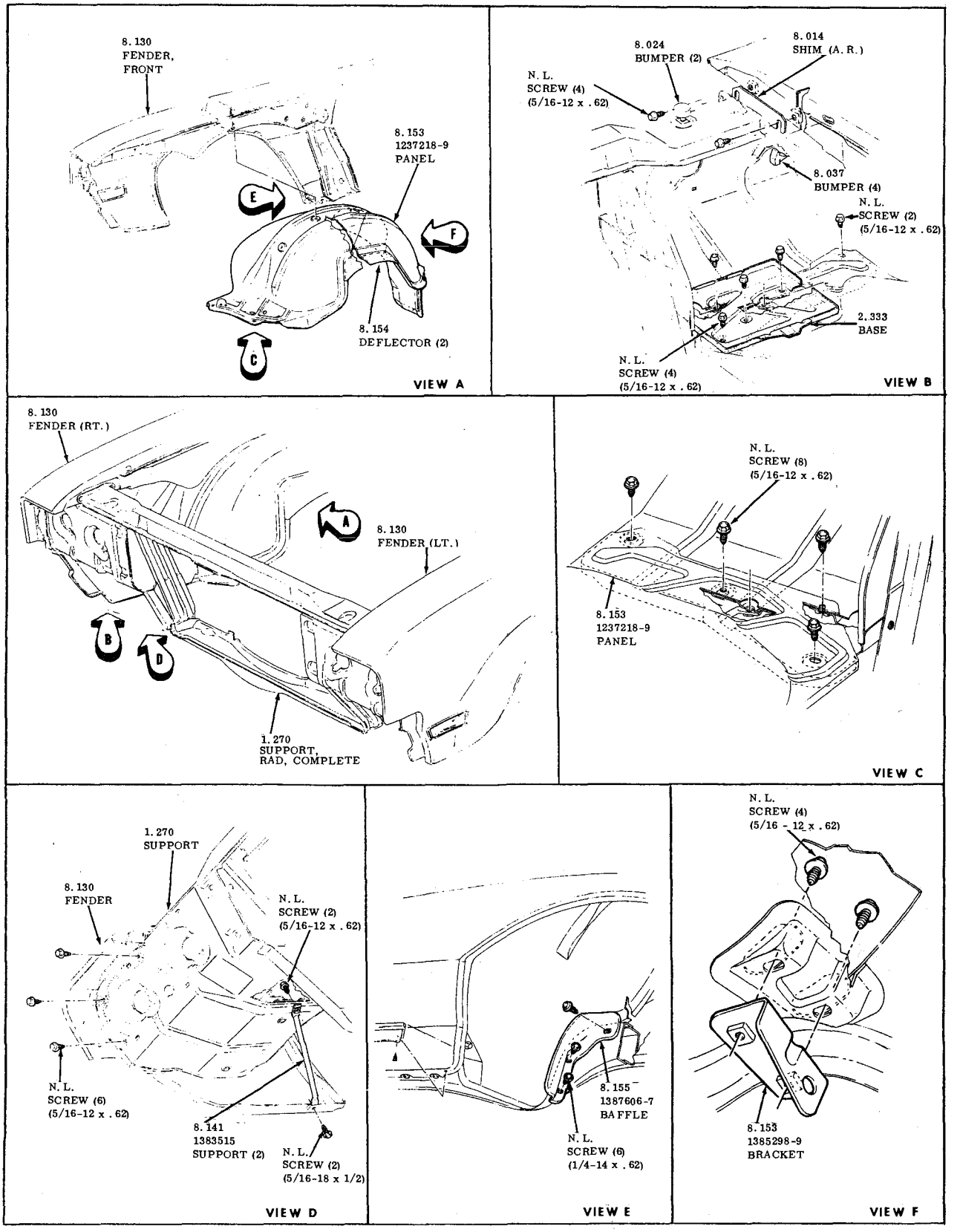

FRONT FENDER SHEET METAL

1971- 1972 30-4000

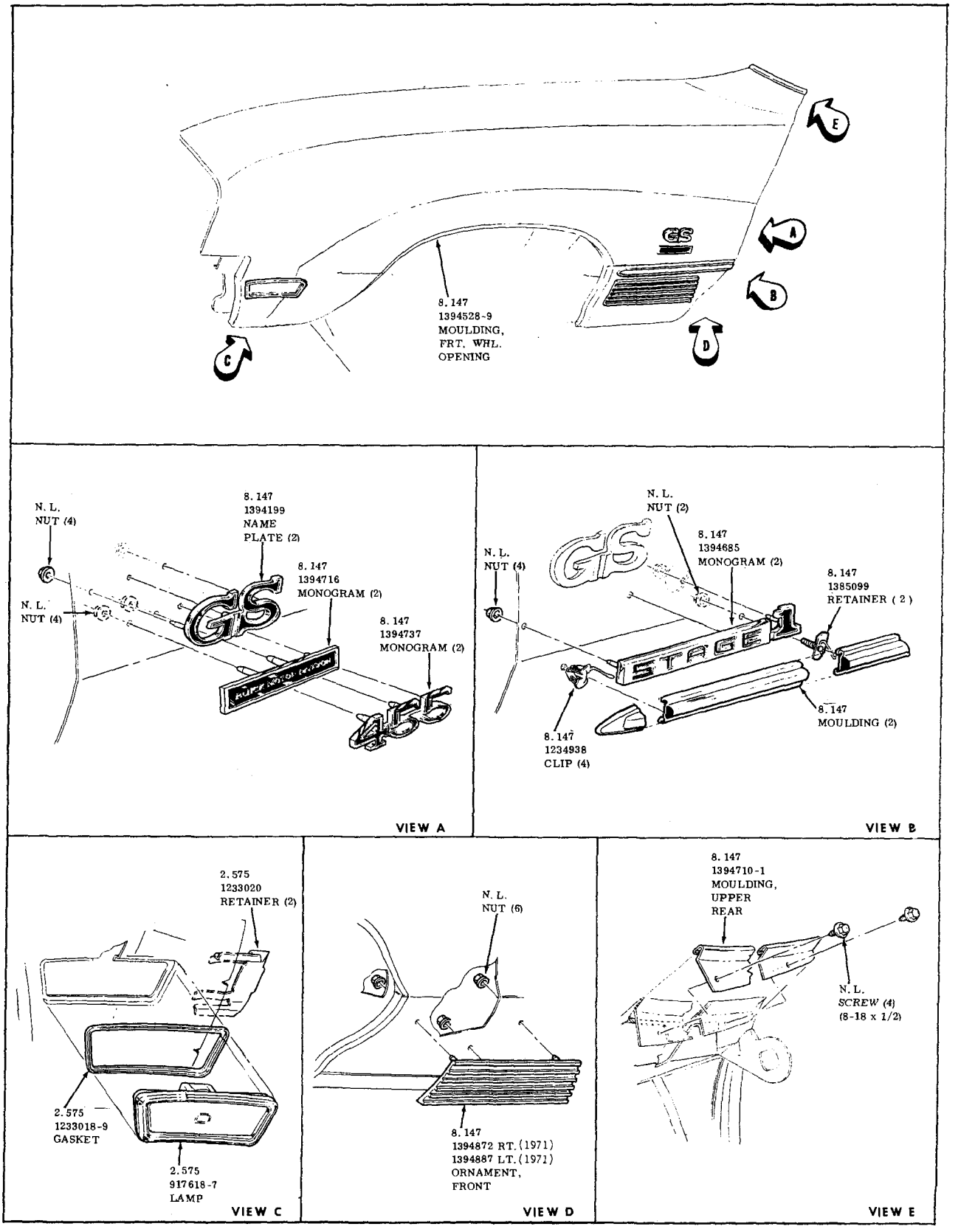

FRONT FENDER MOULDINGS AND ORNAMENT

1971-1972 30-4000

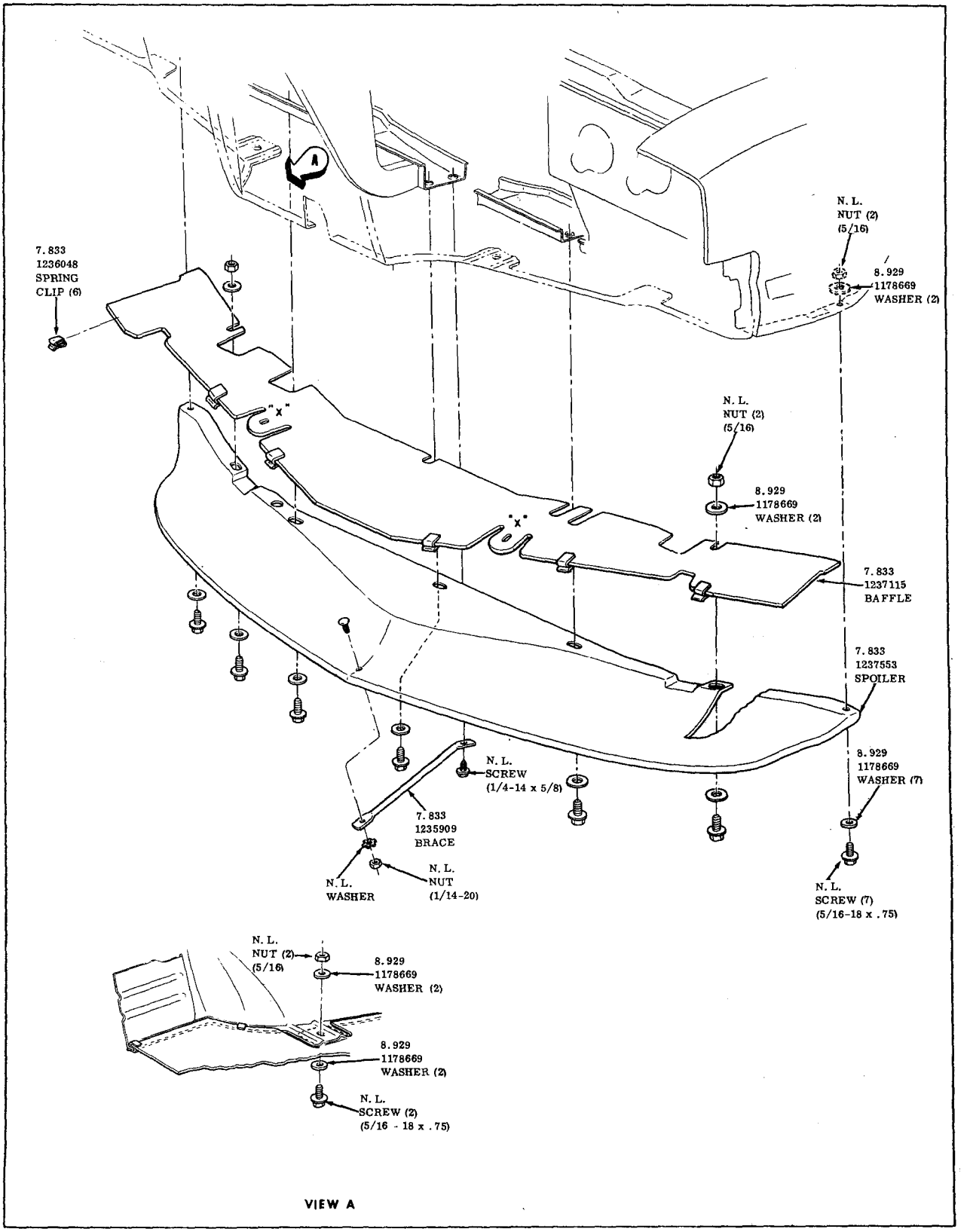

FRONT SPOILER

1971-1972 3437 G.S.X.

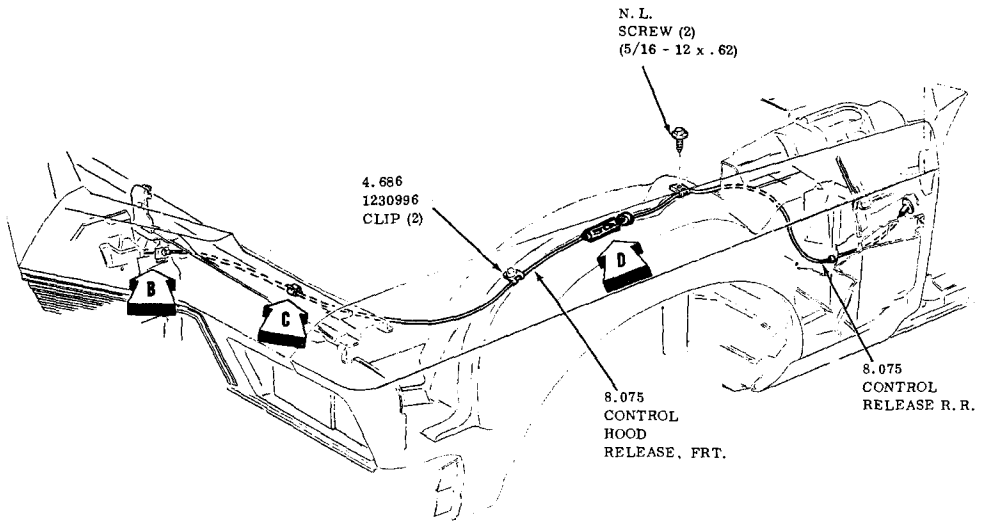

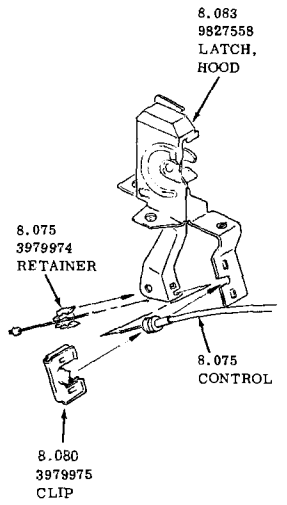

VIEW A

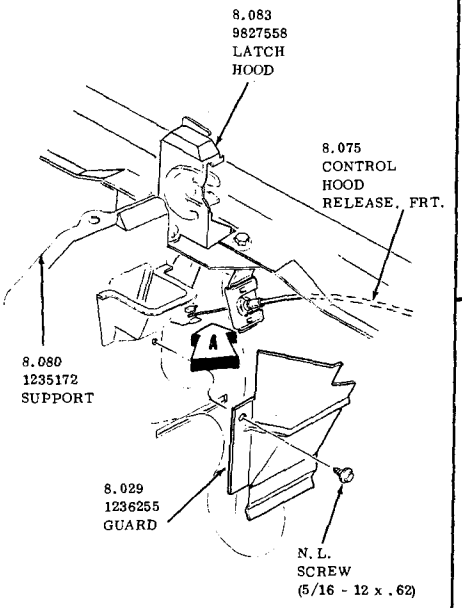

VIEW B

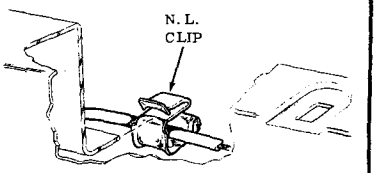

VIEW C

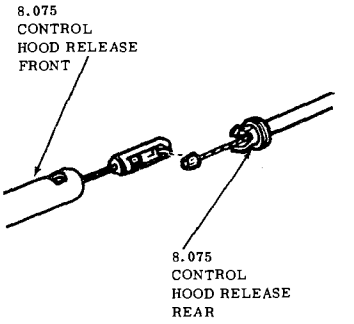

VIEW D

HOOD LATCH AND CABLE

1971-1972 50-60-80-9000

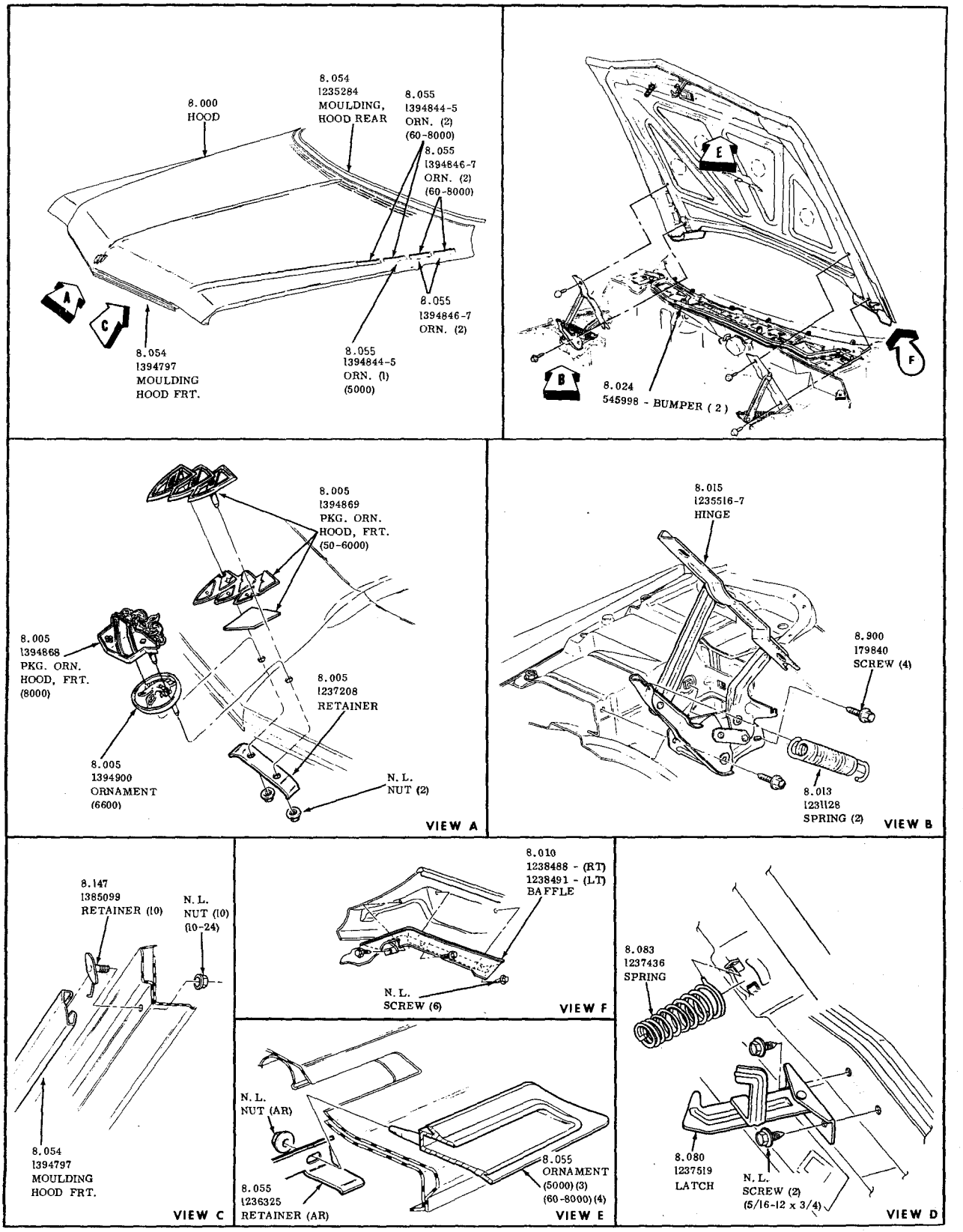

HOOD

1971-50-60-8000

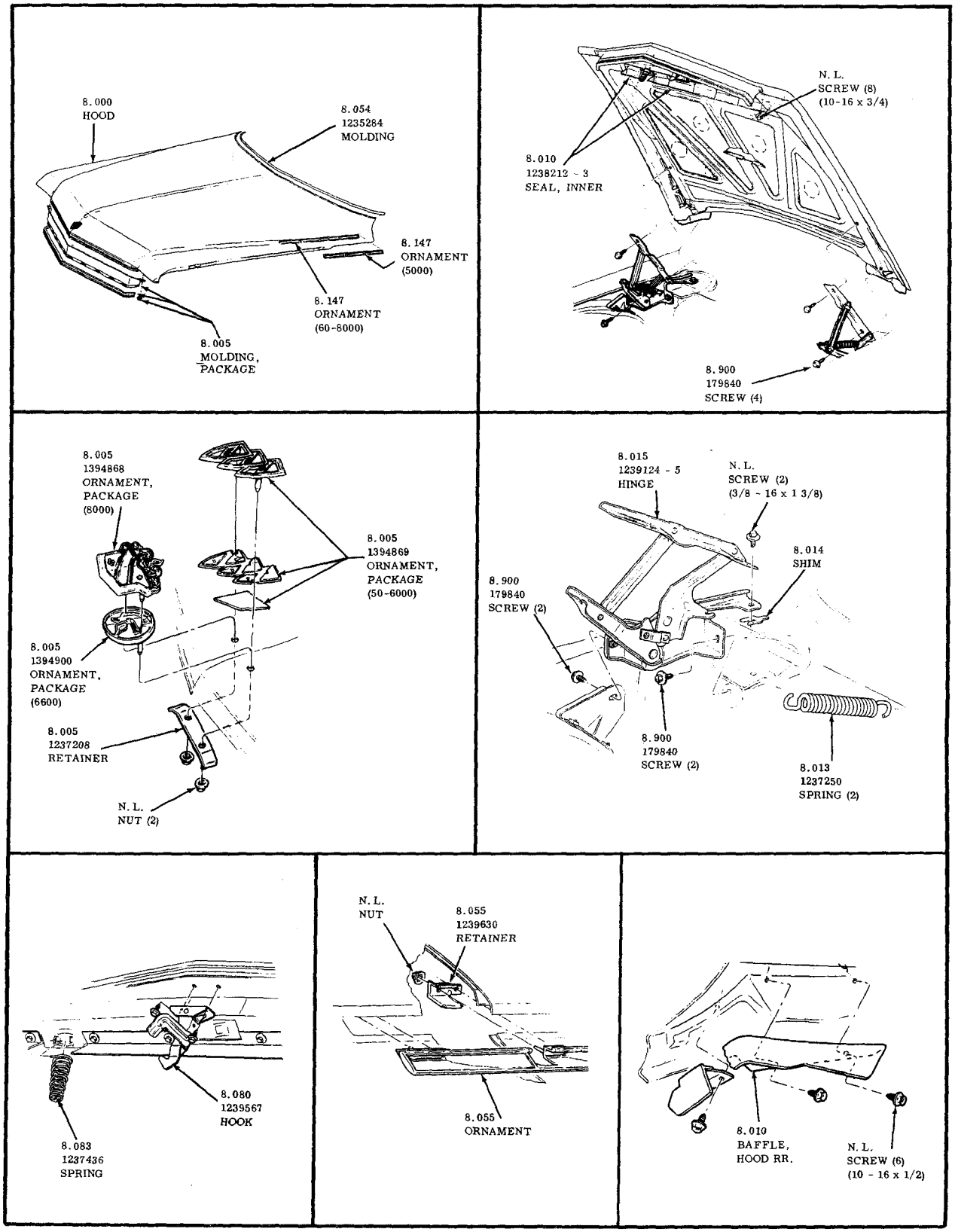

HOOD

1972-50-60-8000

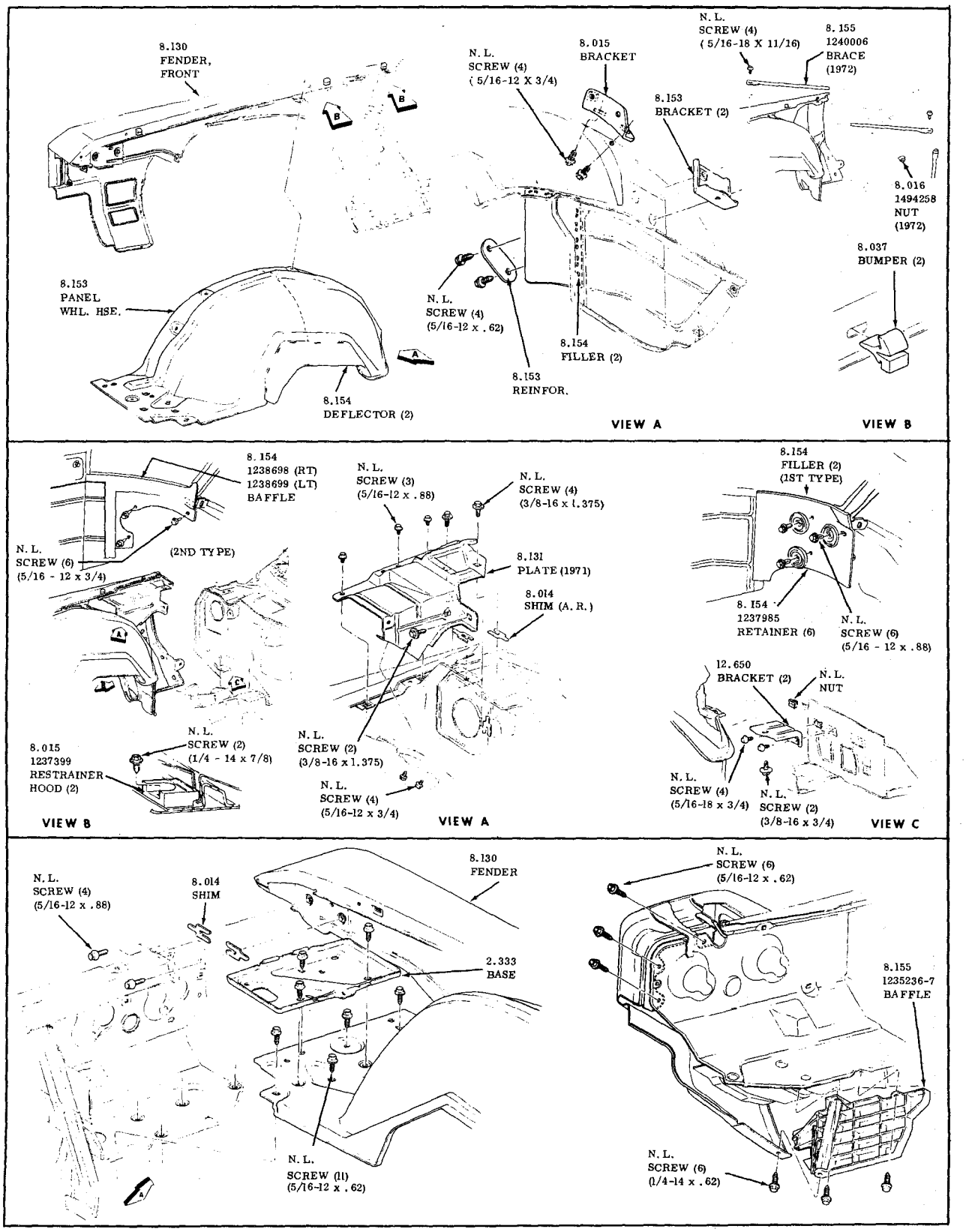

TYPICAL
FRONT FENDER AND SHEET METAL
1971-1972 -50-60-8000

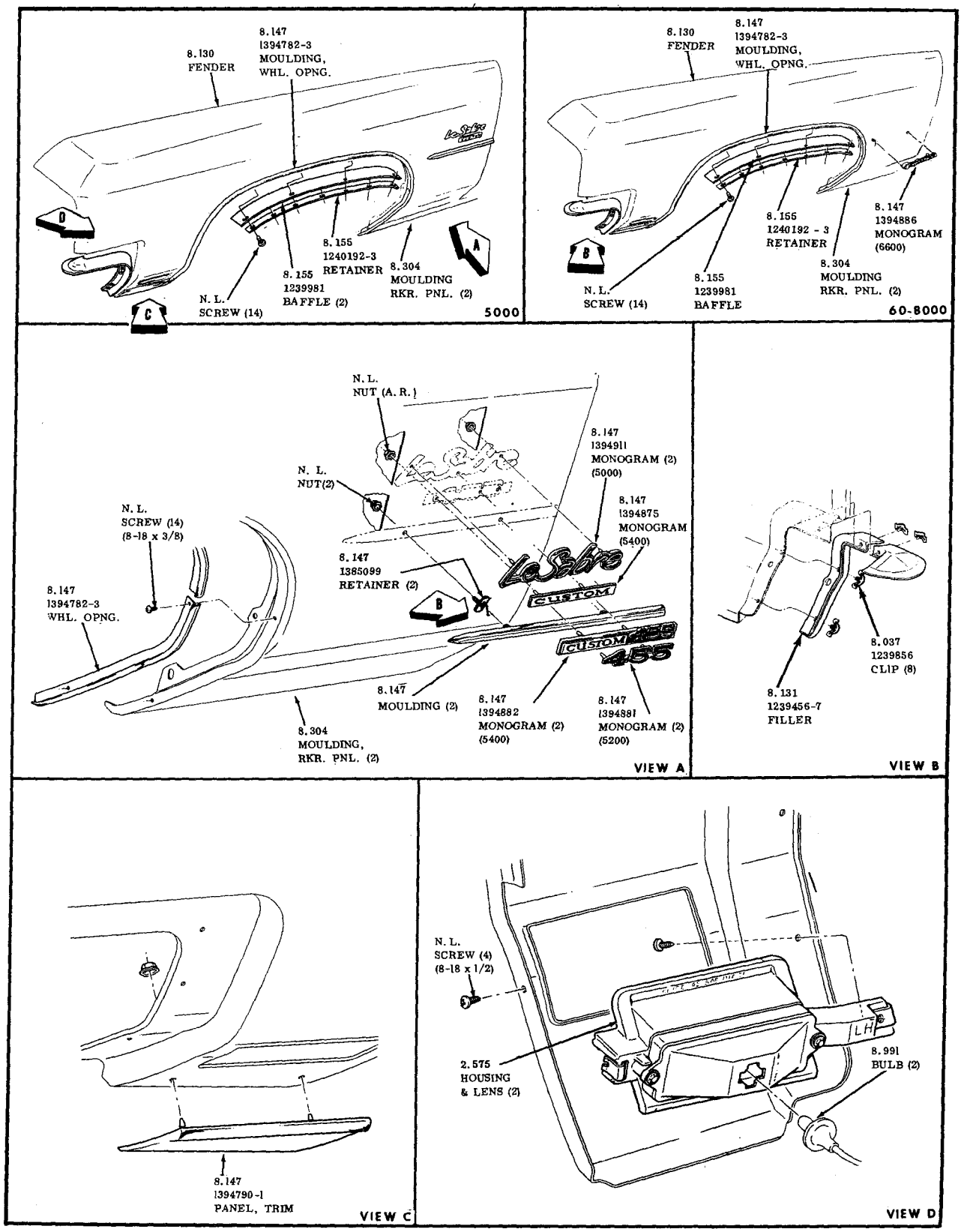

FRONT FENDER

1971-1972-50-60-8000

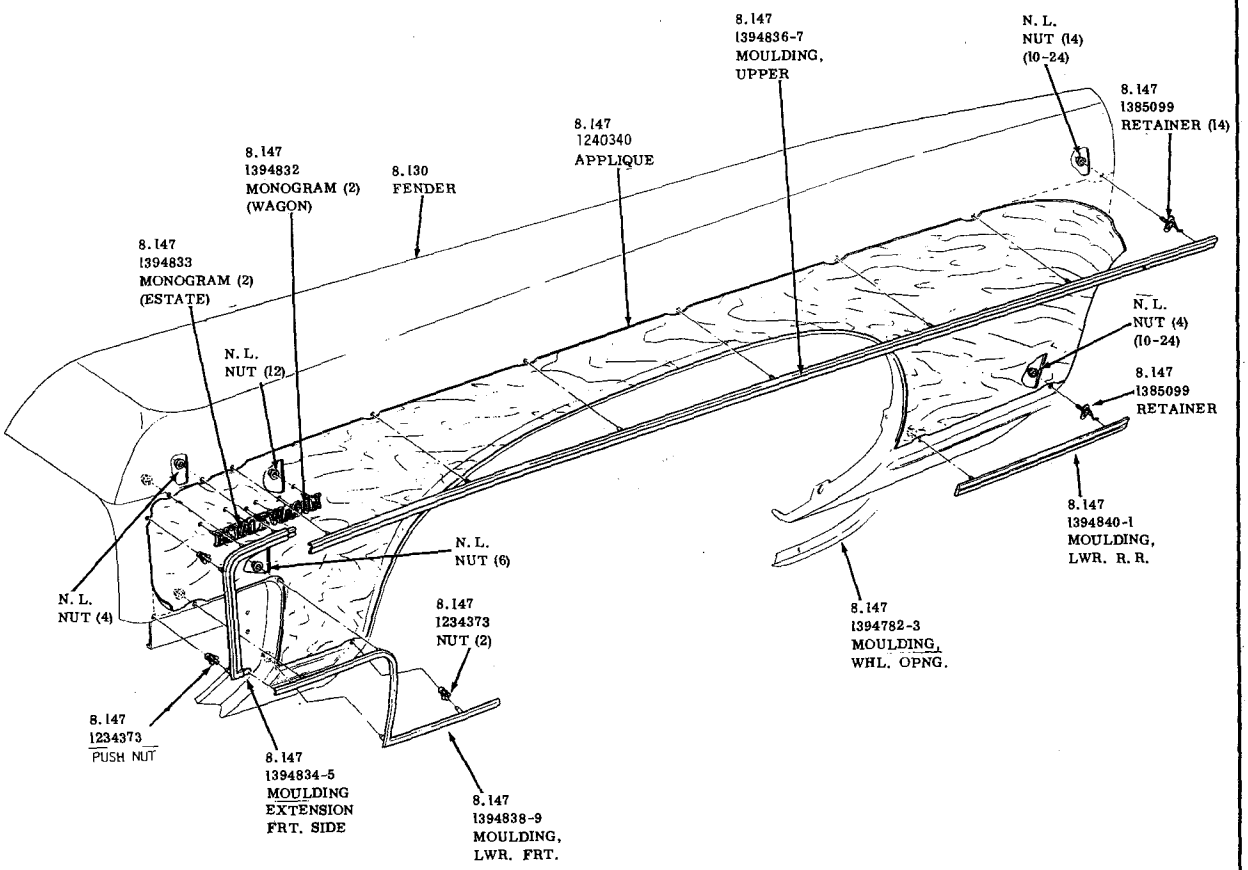

FRONT FENDER AND MOULDING

1971-1972 6035-45

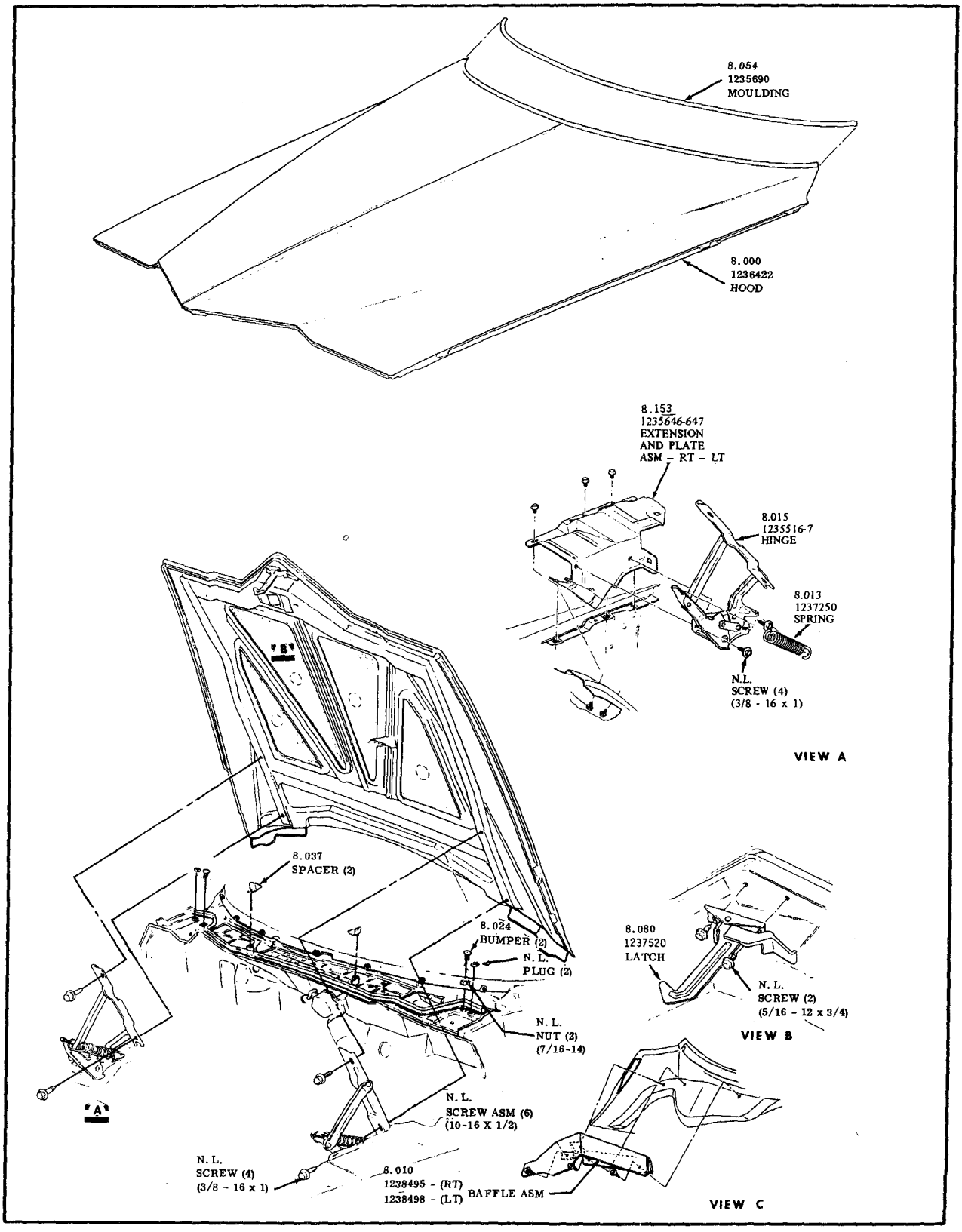

HOOD
1971-1972 9000

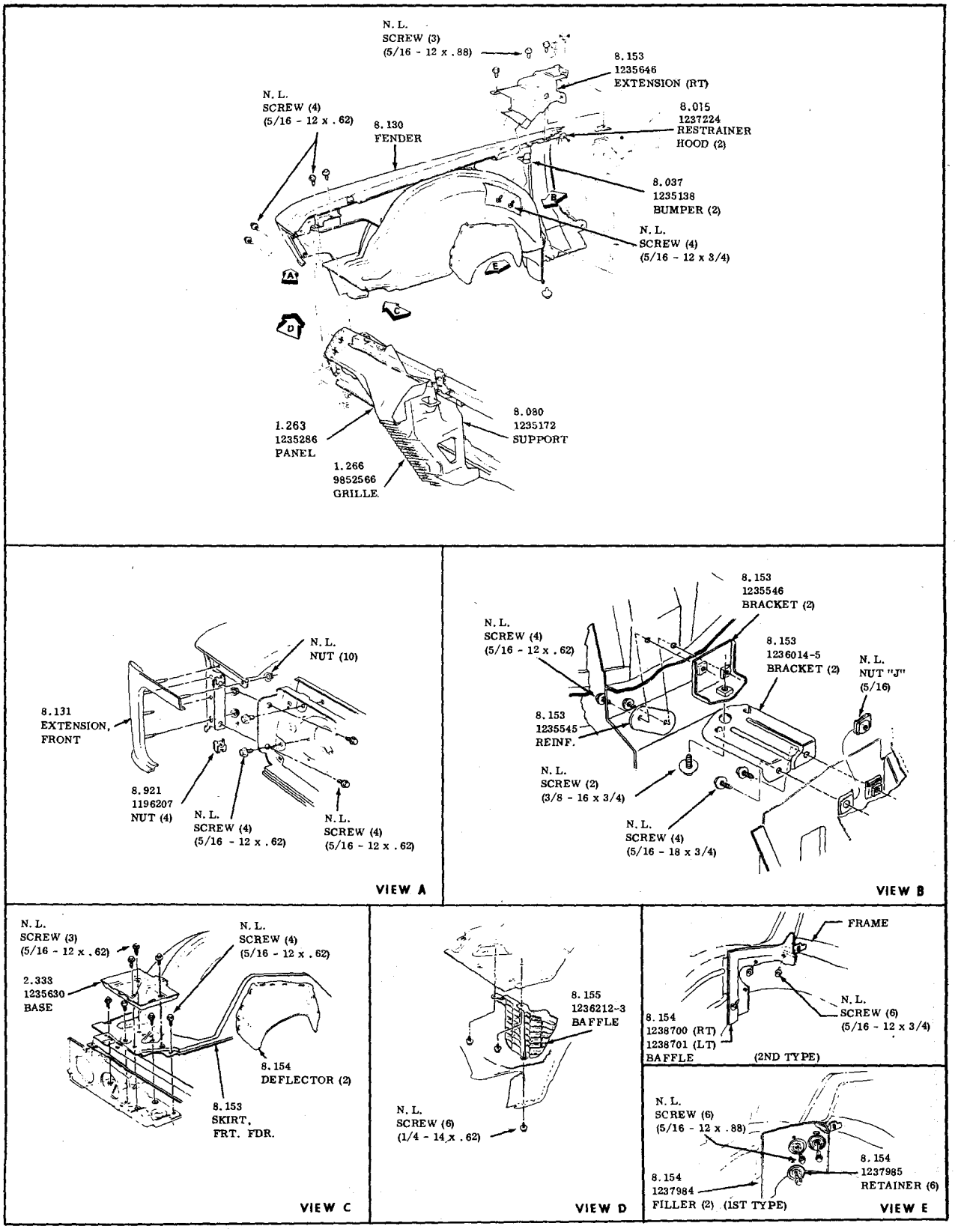

FRONT FENDER SHEET METAL

1971-9000

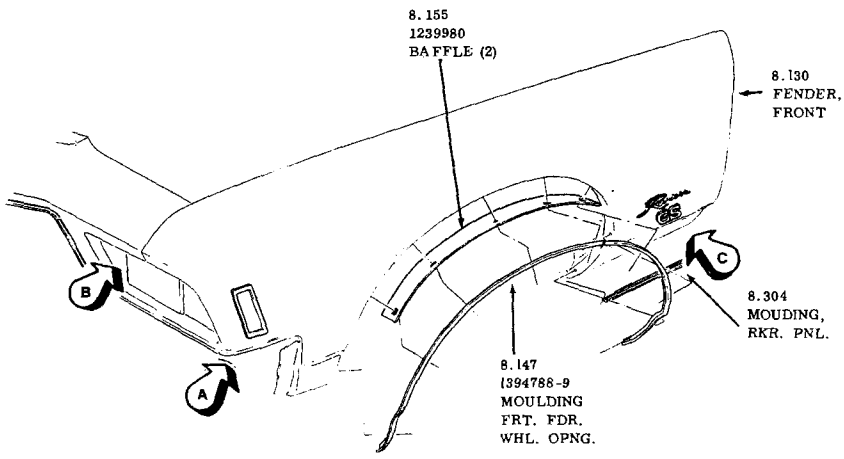

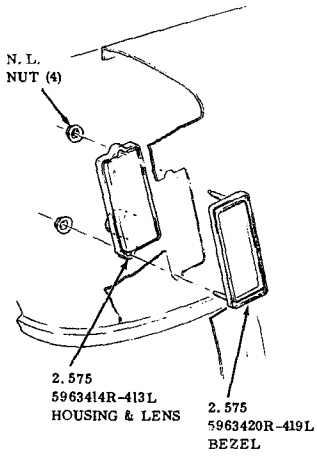

VIEW A

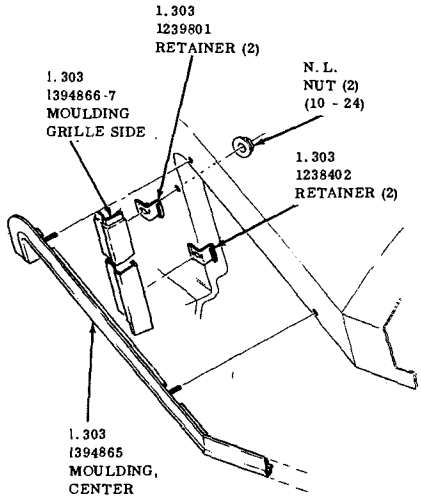

VIEW B

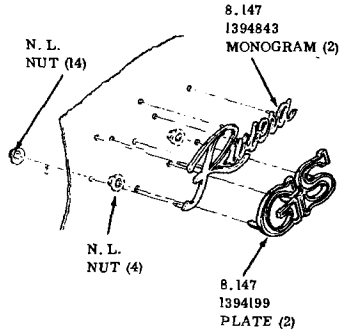

VIEW C

FRONT FENDER AND ORNAMENTATION

1971 - 9000

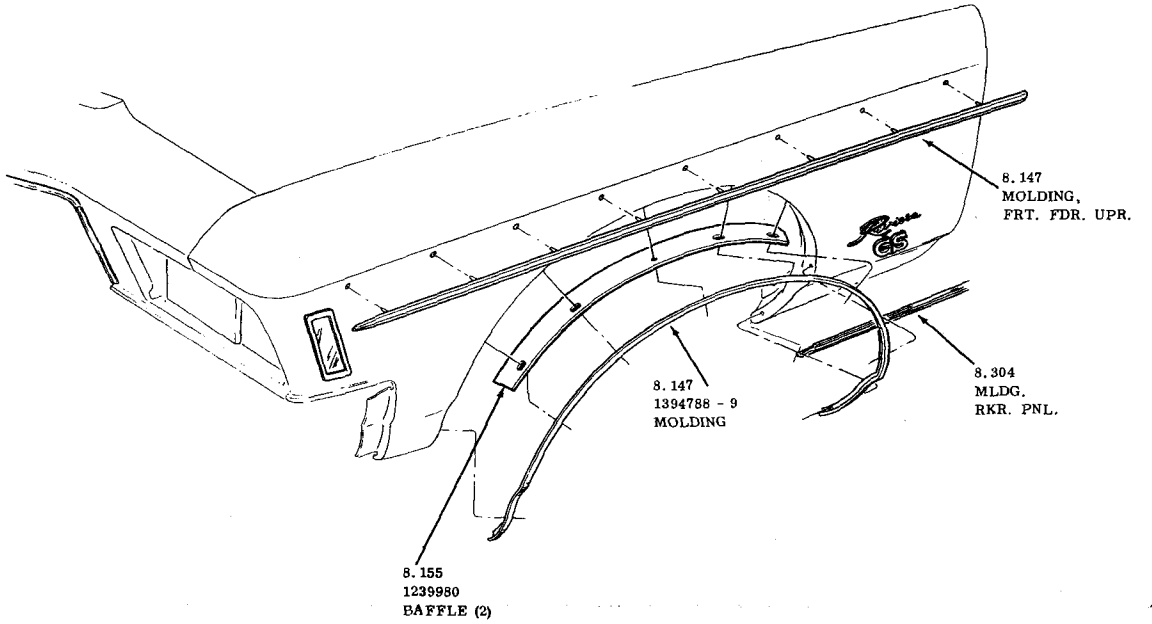

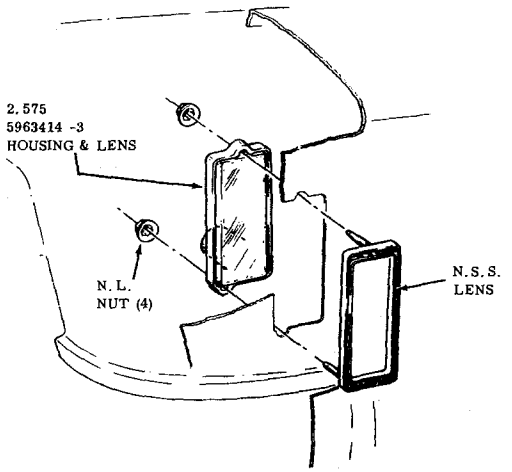

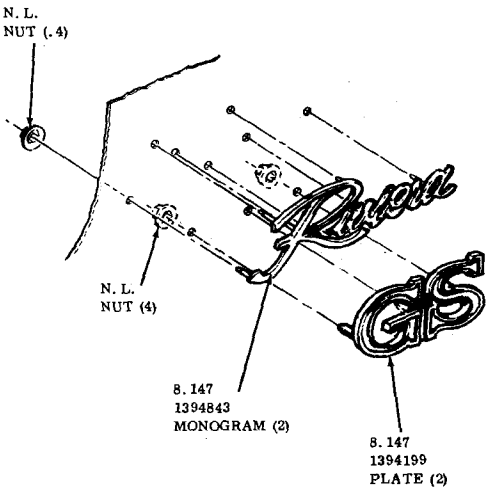

FRONT FENDER MOLDING AND ORNAMENTATION

1972-9000

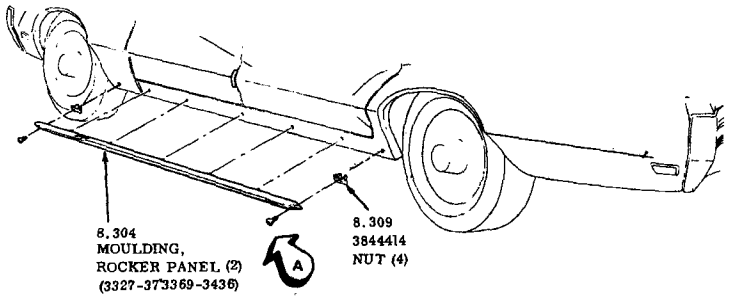

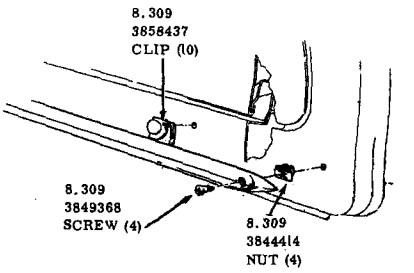

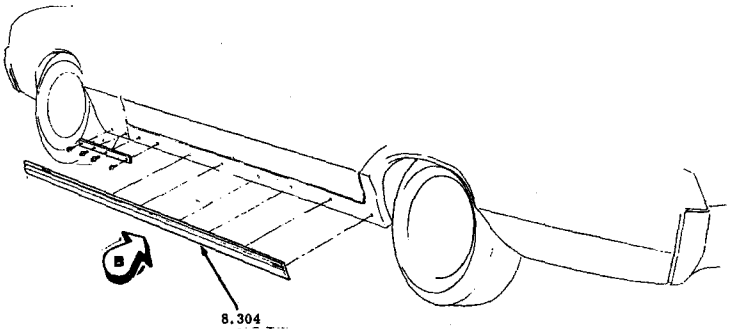

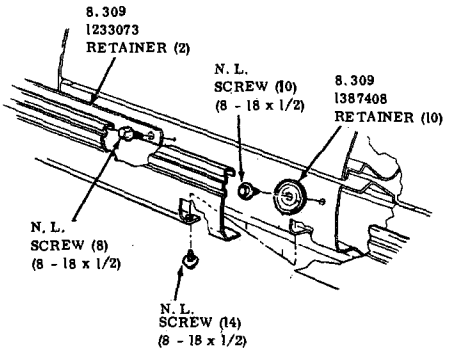

MOULDING - ROCKER PANEL

1971-1972 30-4000

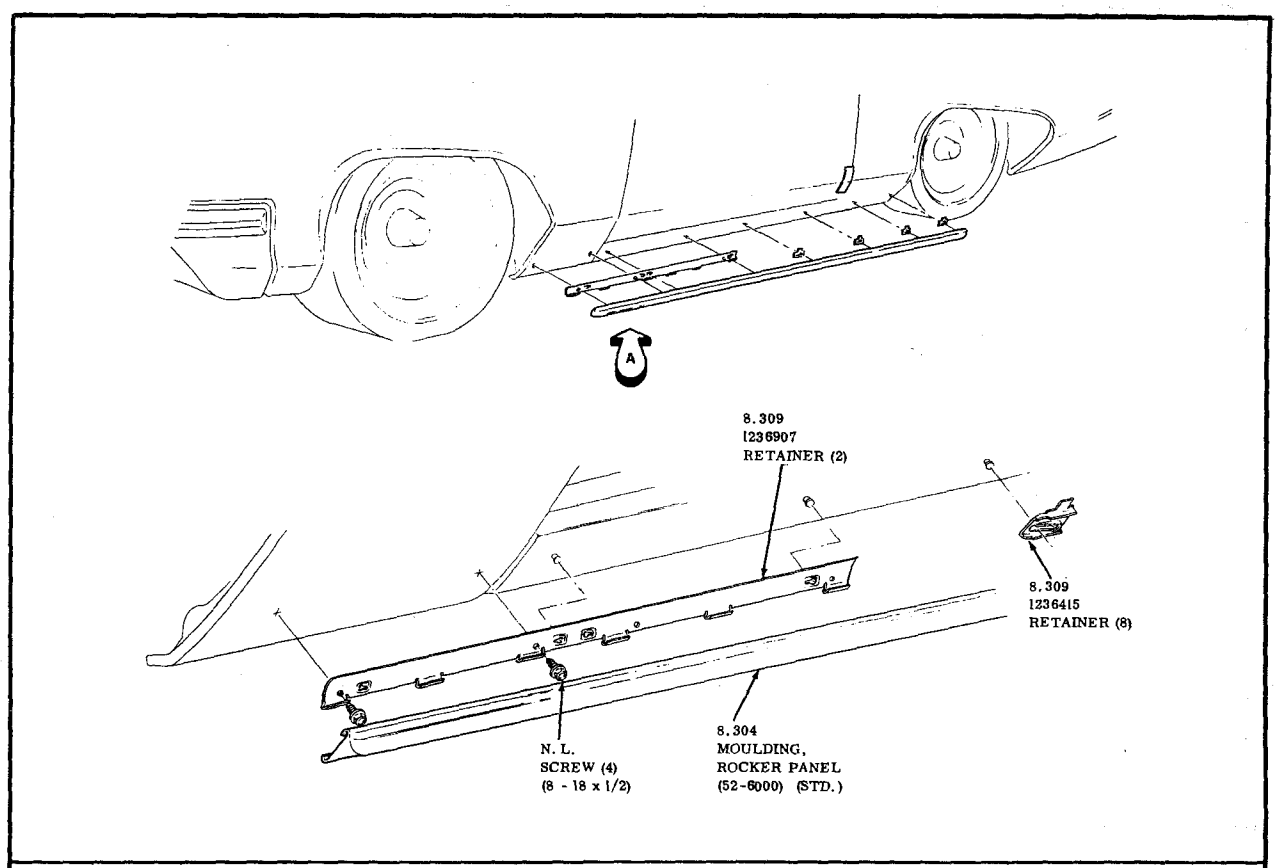

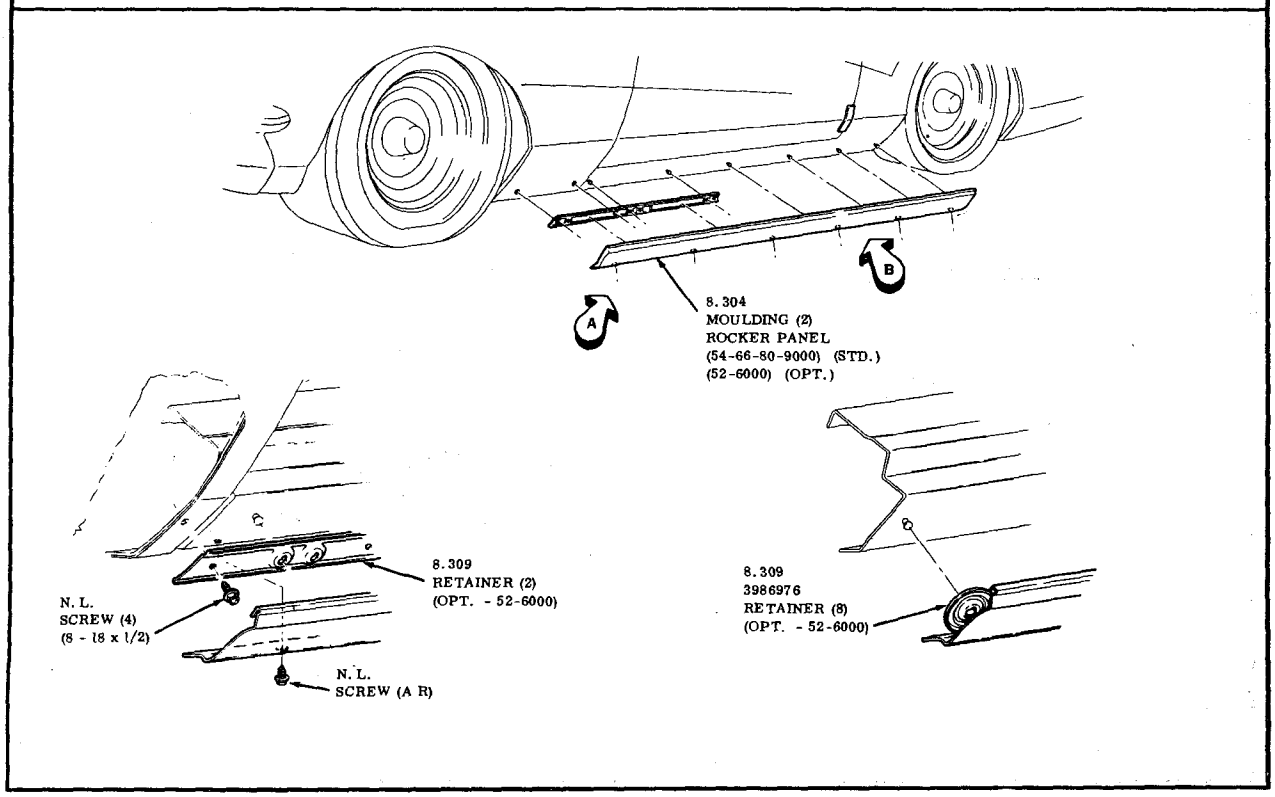

MOULDING, ROCKER PANEL

1971-197250-60-80-9000

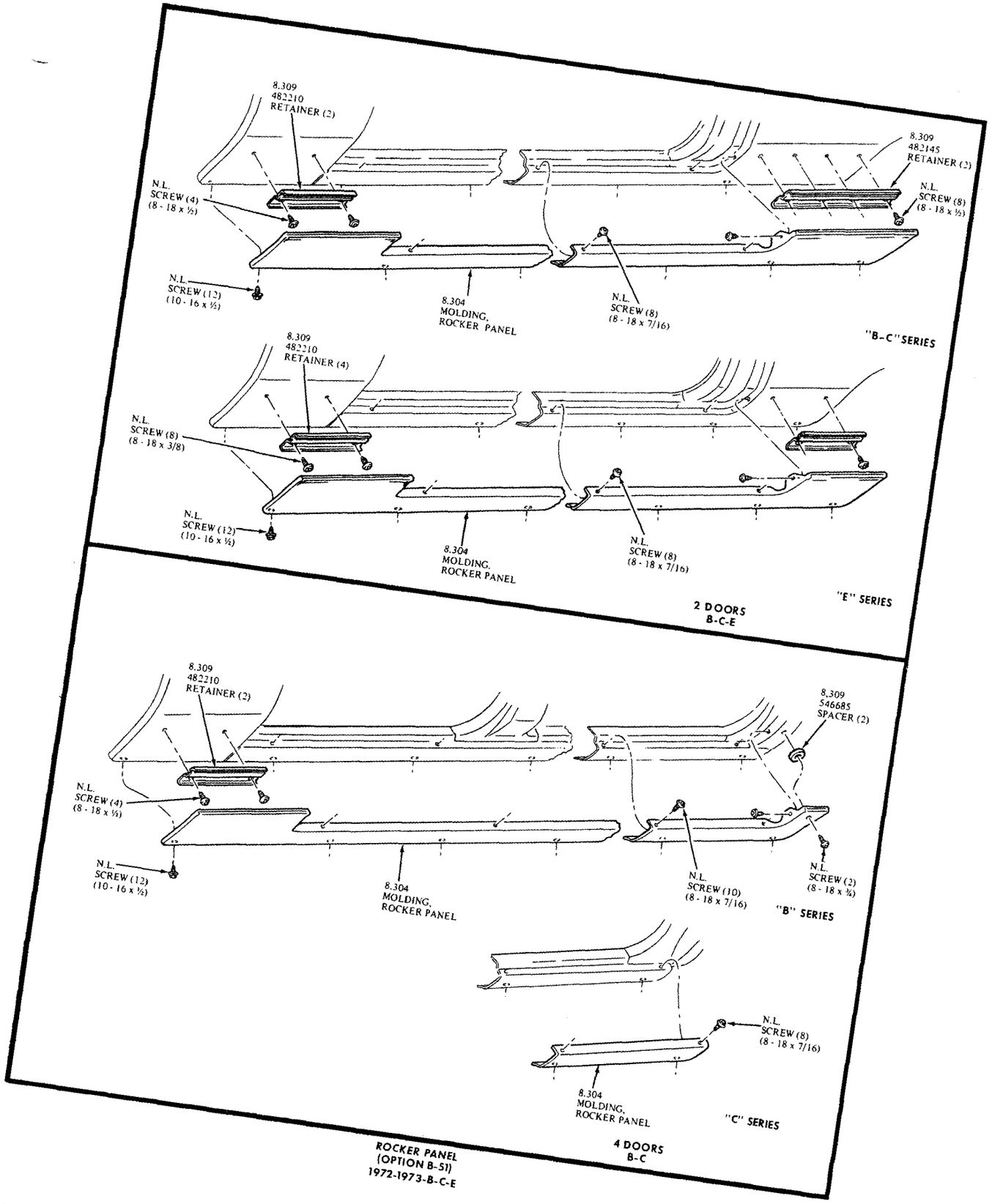

ROCKER PANEL
(OPTION B-51)
1972-1973-B-C-E

MEMORANDA

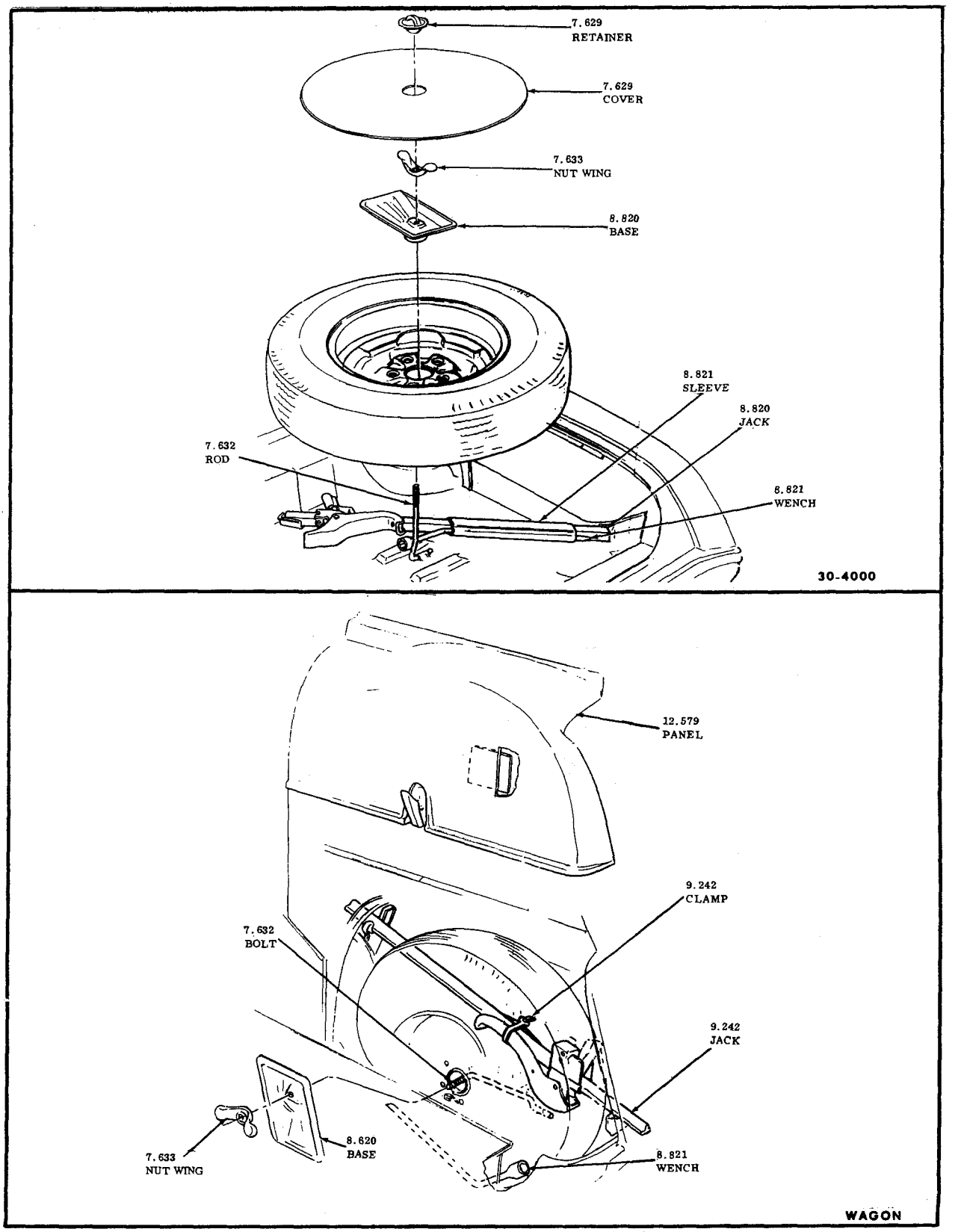

SPARE TIRE INSTALLATION

1971-1972 30-4000

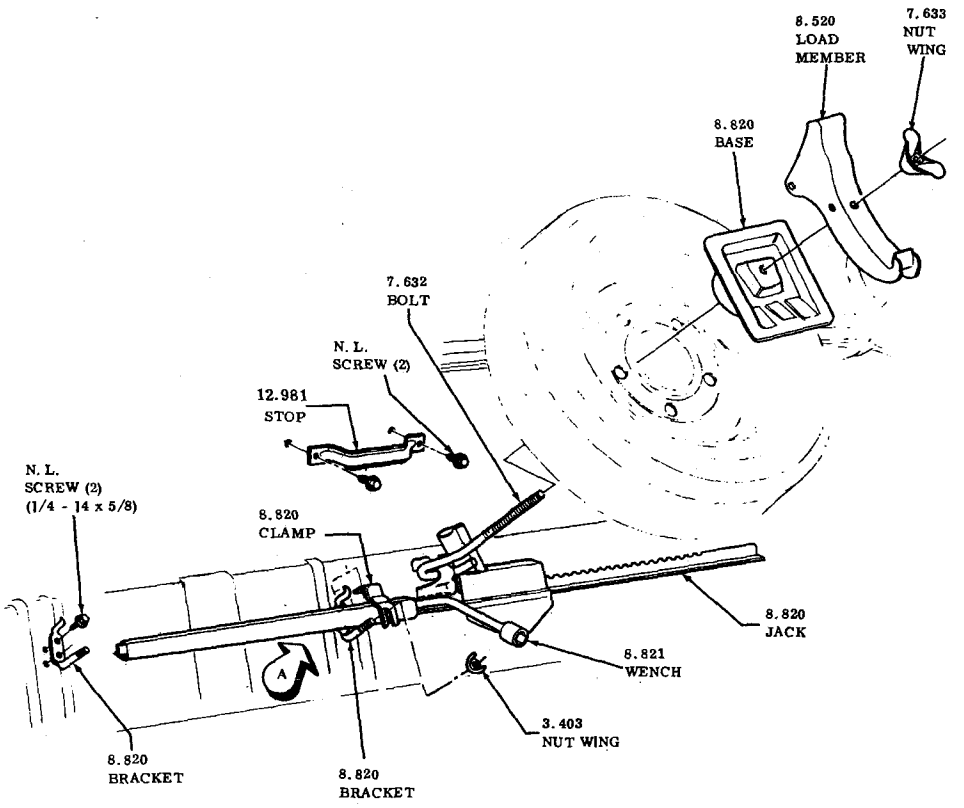

VIEW A

SPARE TIRE INSTALLATION

1971-1972 30-4000 EXC. WAGON (OPTION)

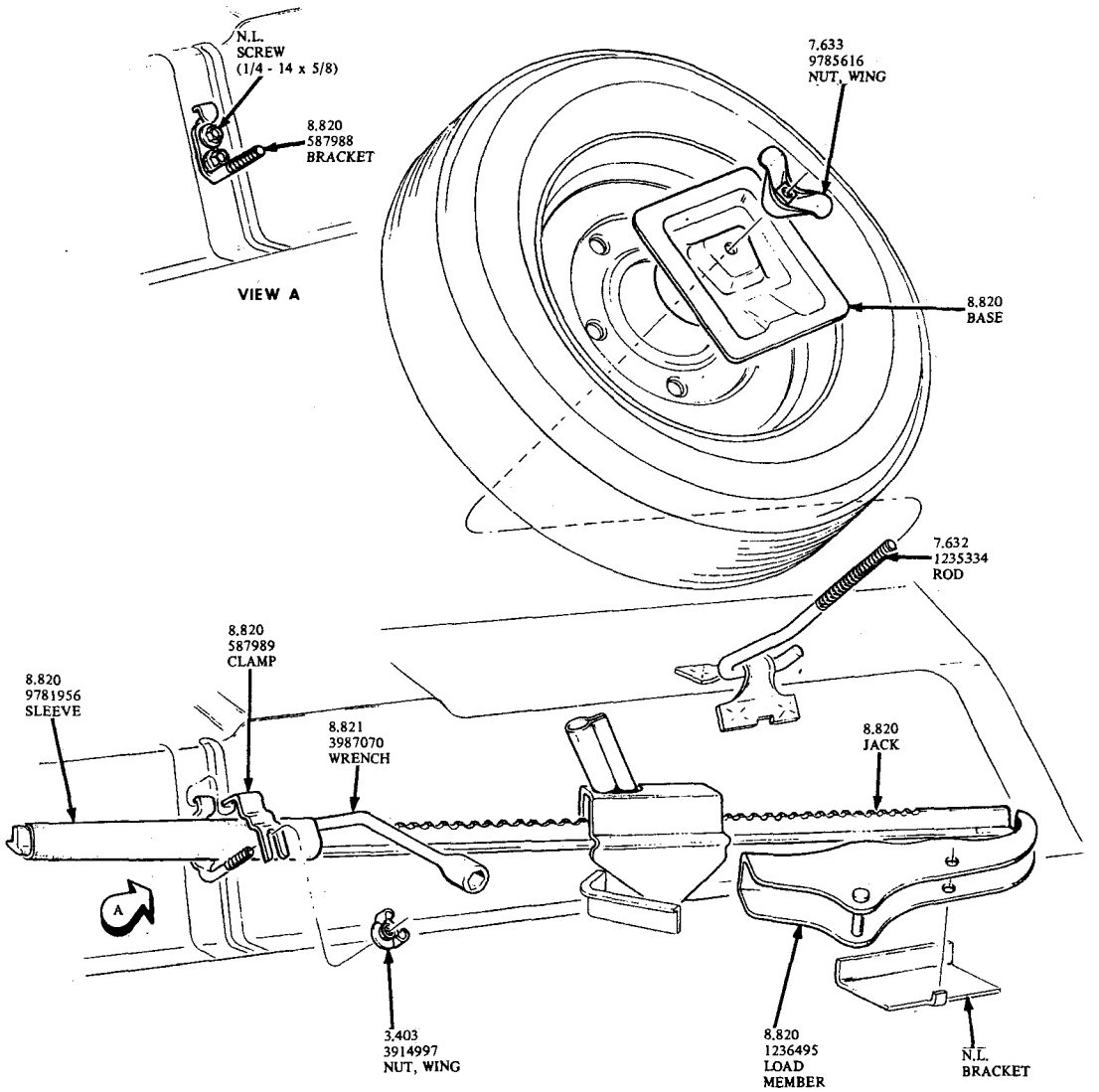

SPARE TIRE INSTALLATION
1972-30-4000 EXC. WAGON (OPTION)

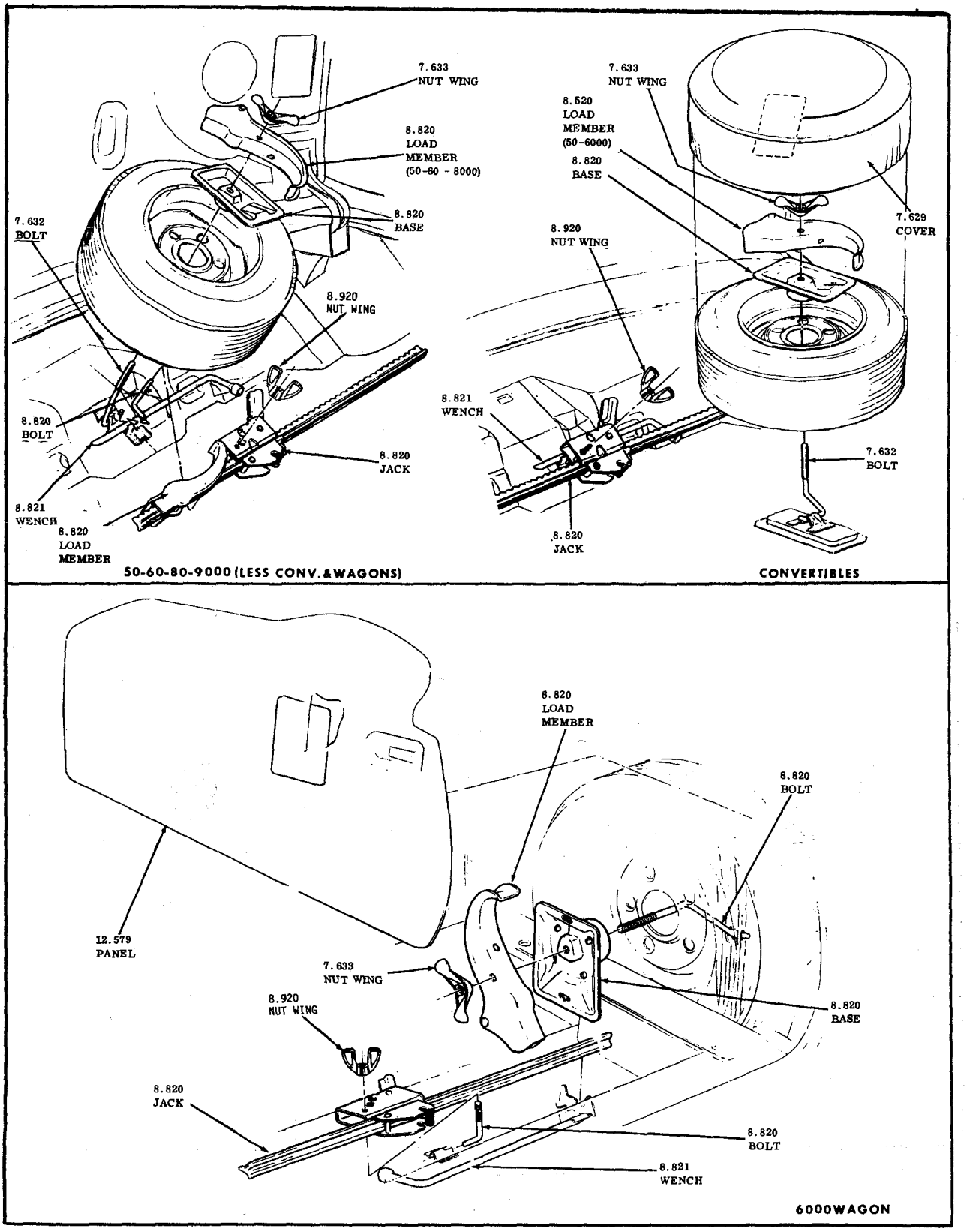

SPARE TIRE INSTALLATION

1971-1972 50-60-80-9000

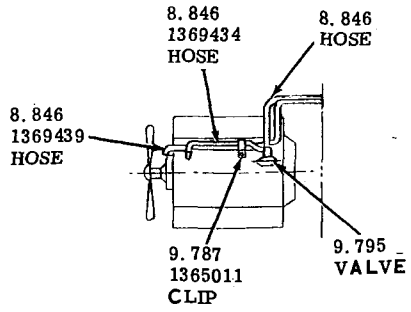

AIR CONDITIONING

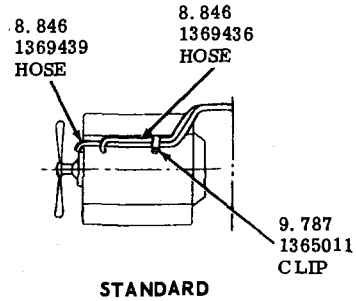

STANDARD

LESABRE SERIES

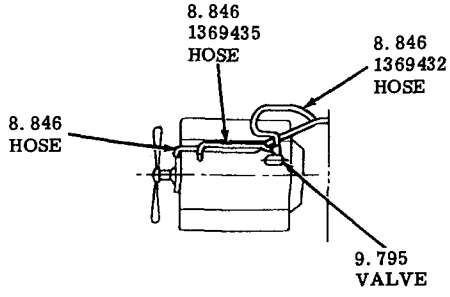

AIR CONDITIONING

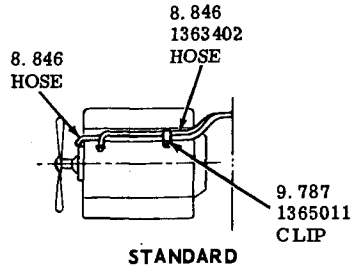

STANDARD

SPECIAL SERIES (V-6)

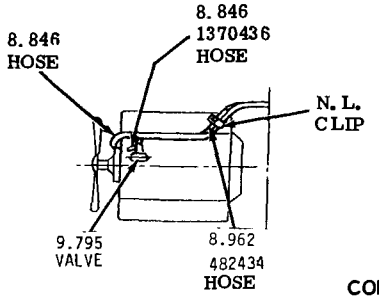

AIR CONDITIONING

WILDCAT SERIES

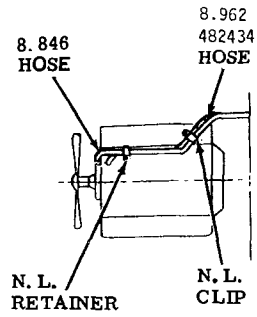

STANDARD

WILDCAT SERIES

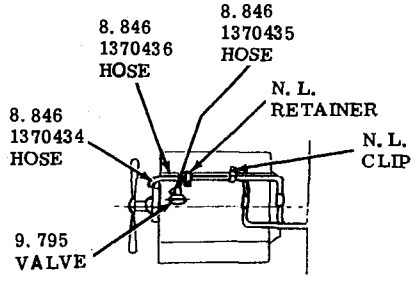

HEATER OR AIR CONDITIONING

RiVIERA SERIES

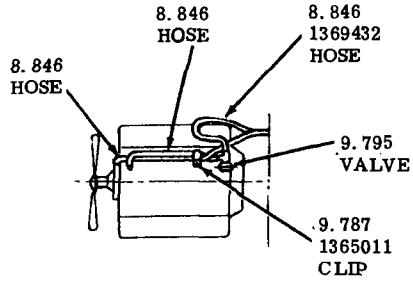

AIR CONDITIONING

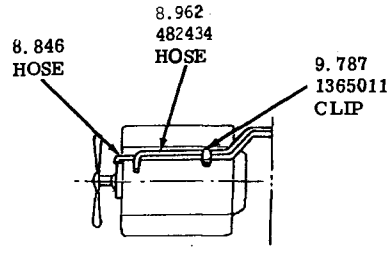

STANDARD

SPECIAL SERIES (V-8)

1965 HEATER HOSE CHART

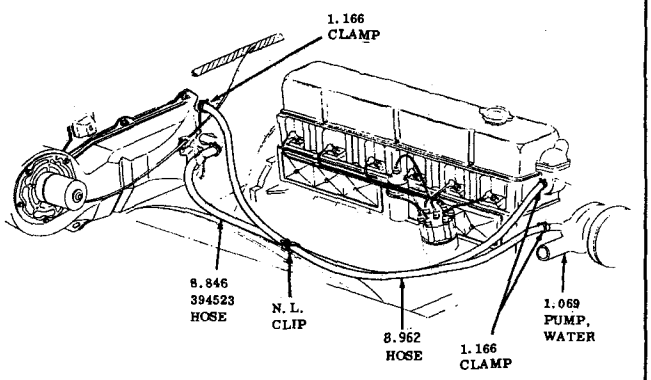

250 L-6 (3000)

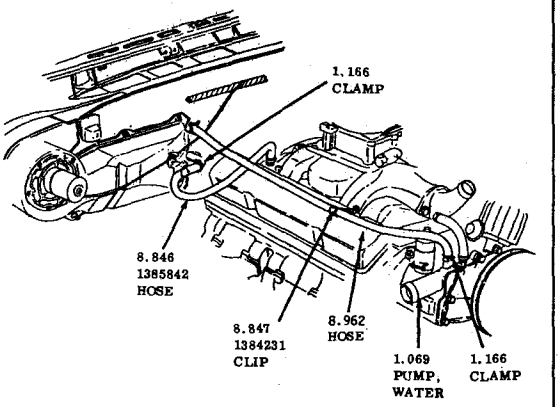

350-400 V-8 (30-4000)

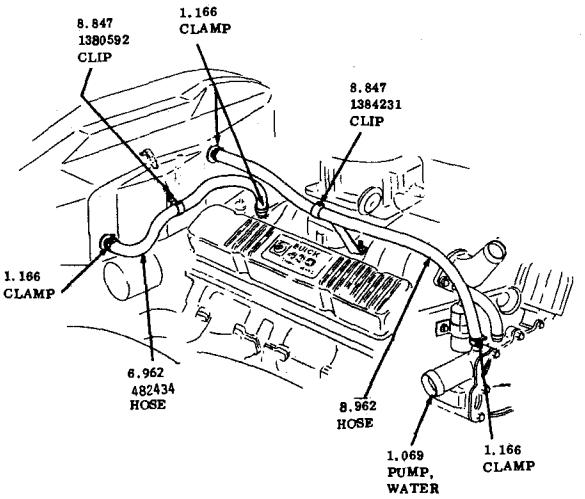

430 V-8-9000

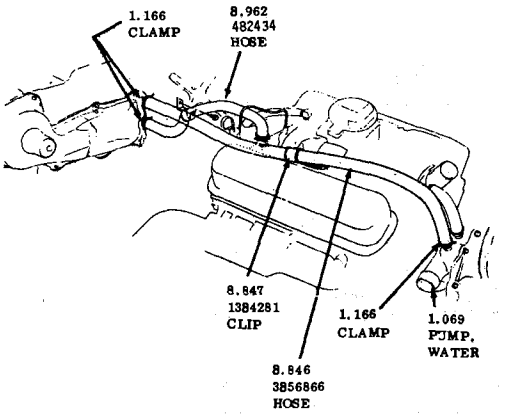

430 V-8 (50-60-8000)

HEATER HOSE
1968-1969 ALL

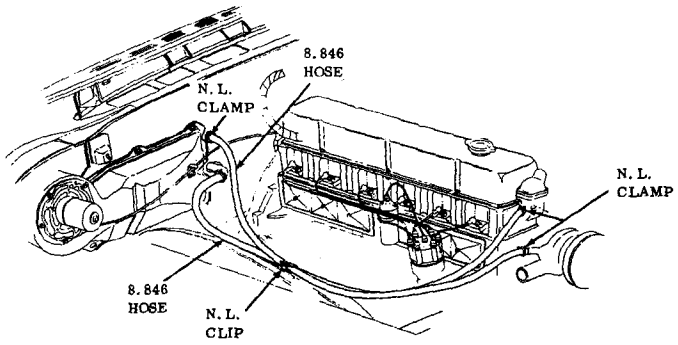

3000 (L-6 ENG.)

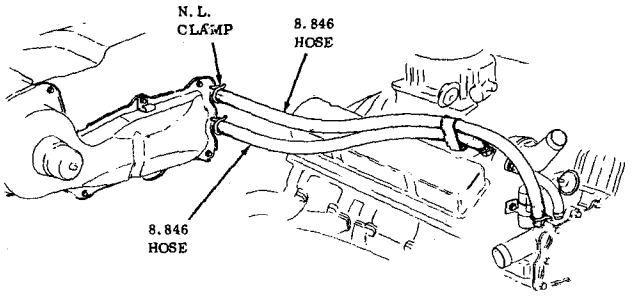

30-4000 (350 CU. IN. ENG.)

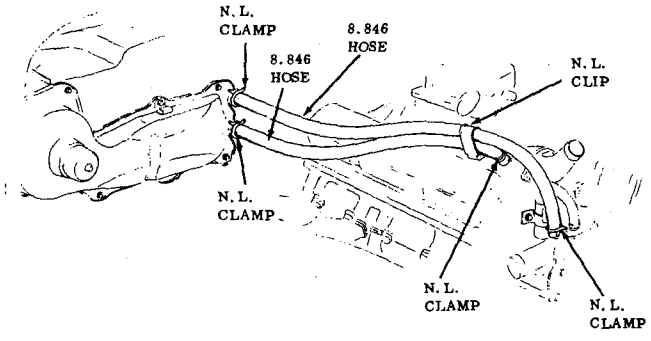

50-60-8000

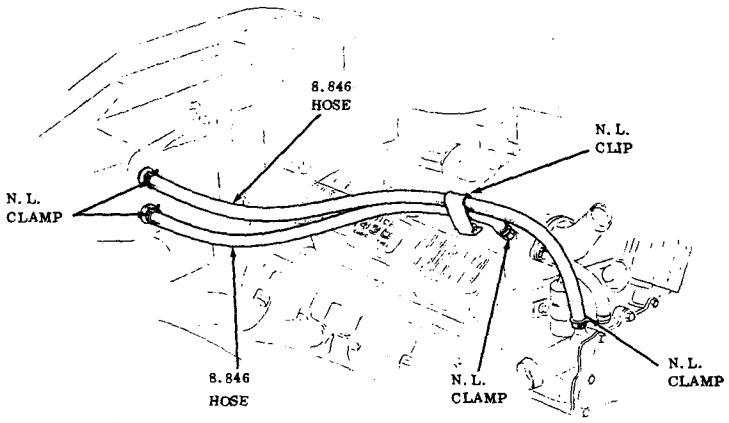

9000

HEATER HOSE
1970-ALL

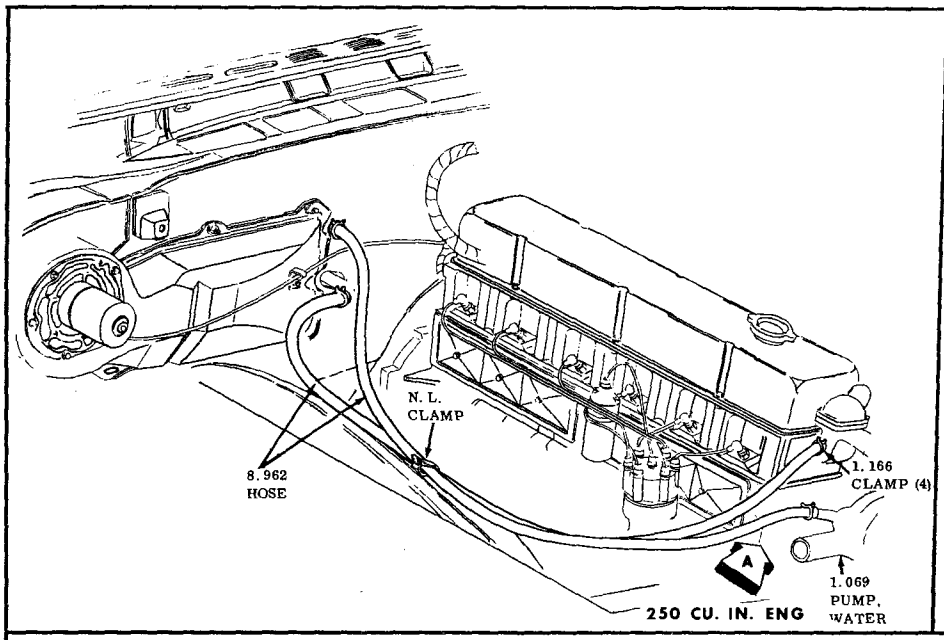

250 CU. IN. ENG

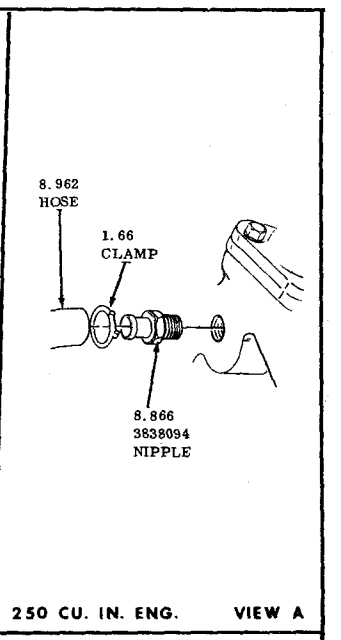

250 CU. IN. ENG. VIEW A

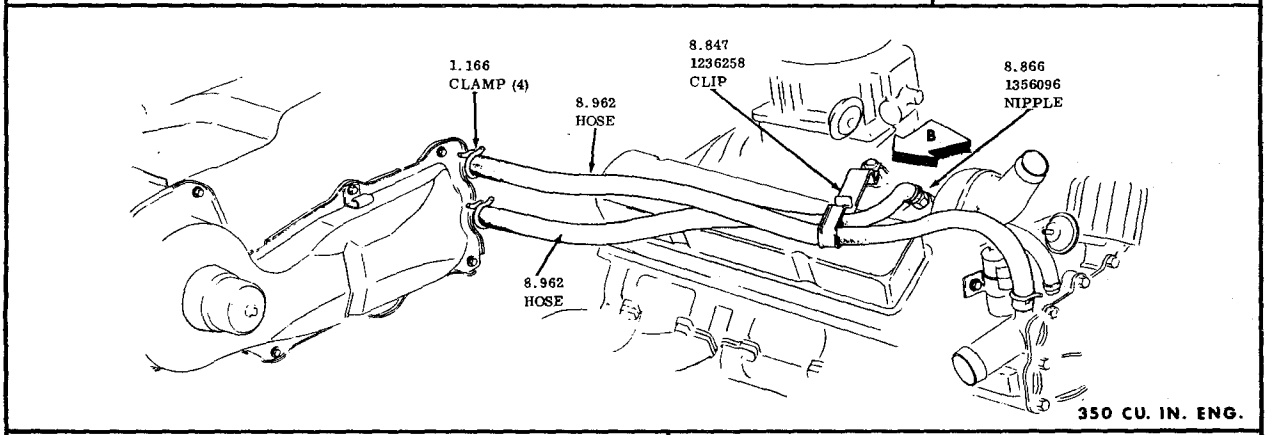

350 CU. IN. ENG.

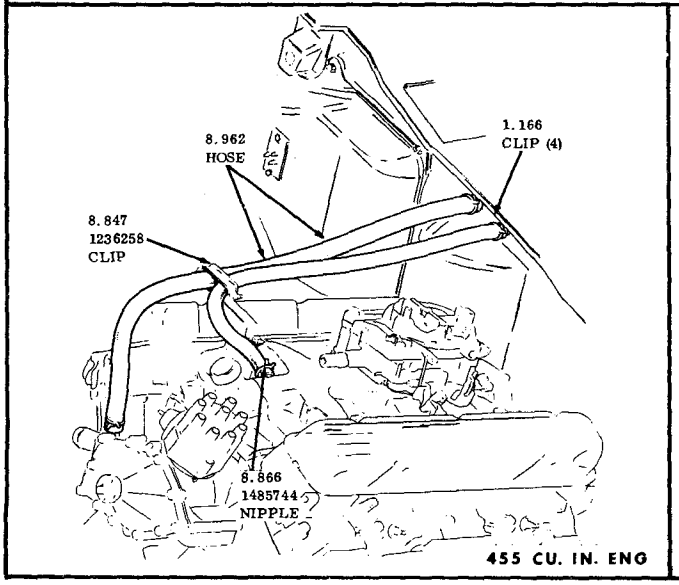

455 CU. IN. ENG

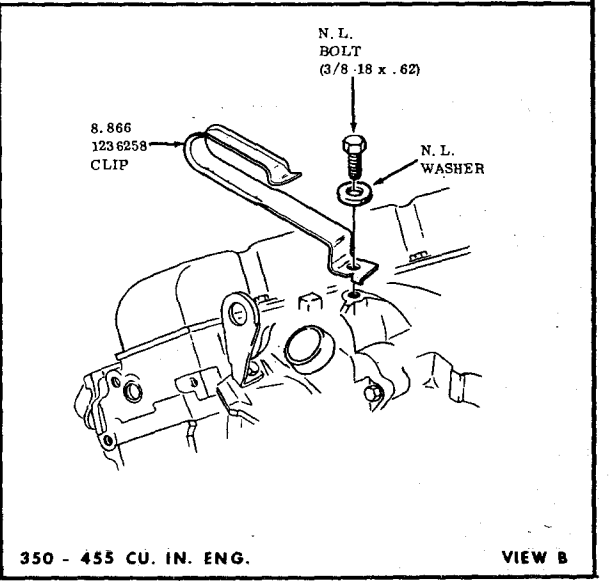

350 - 455 CU. IN. ENG. VIEW B

HEATER HOSES
1971-1972 ALL

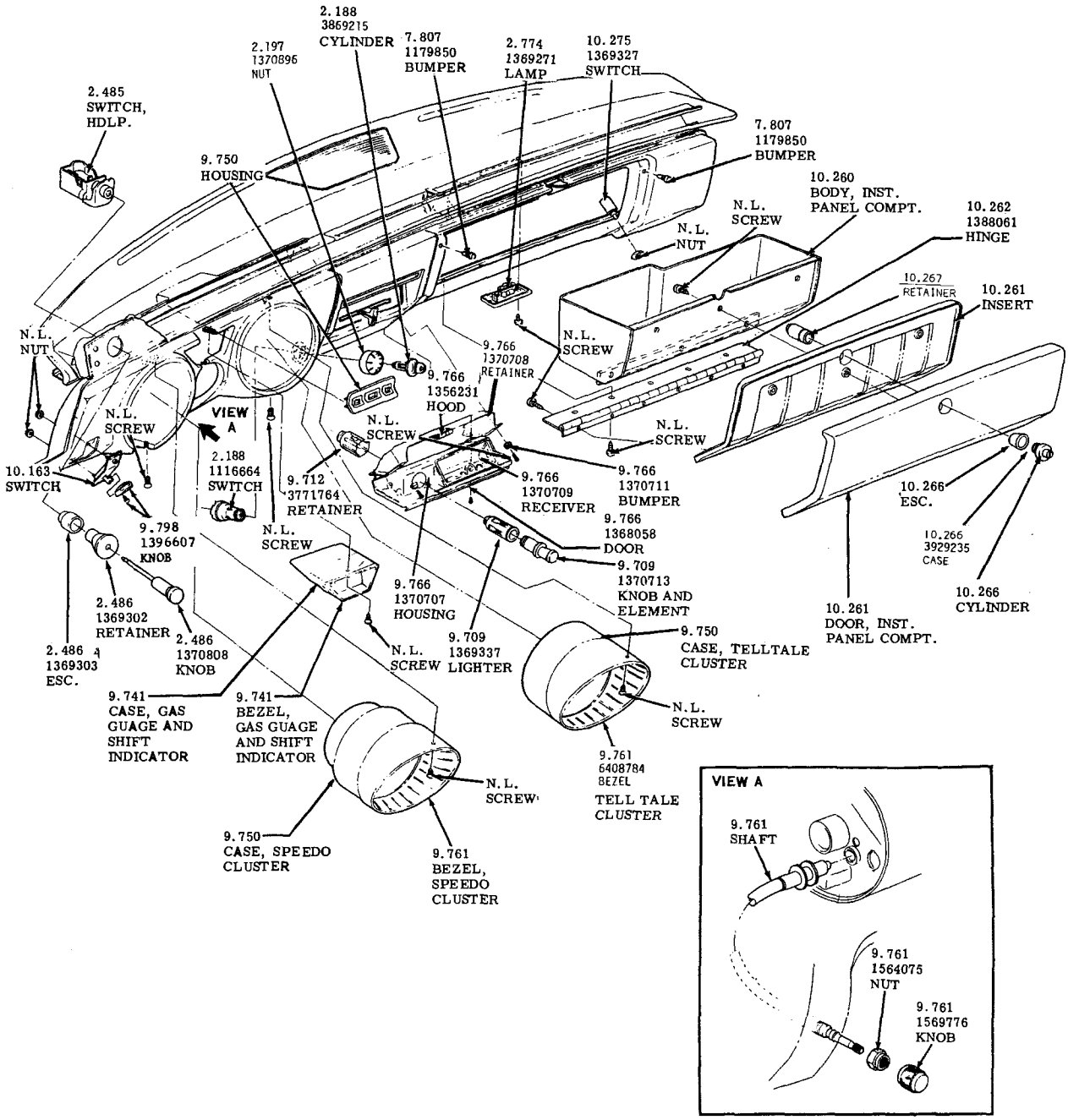

INSTRUMENT PANEL HARDWARE
1965 - LESABRE-WILDCAT-ELECTRA 225

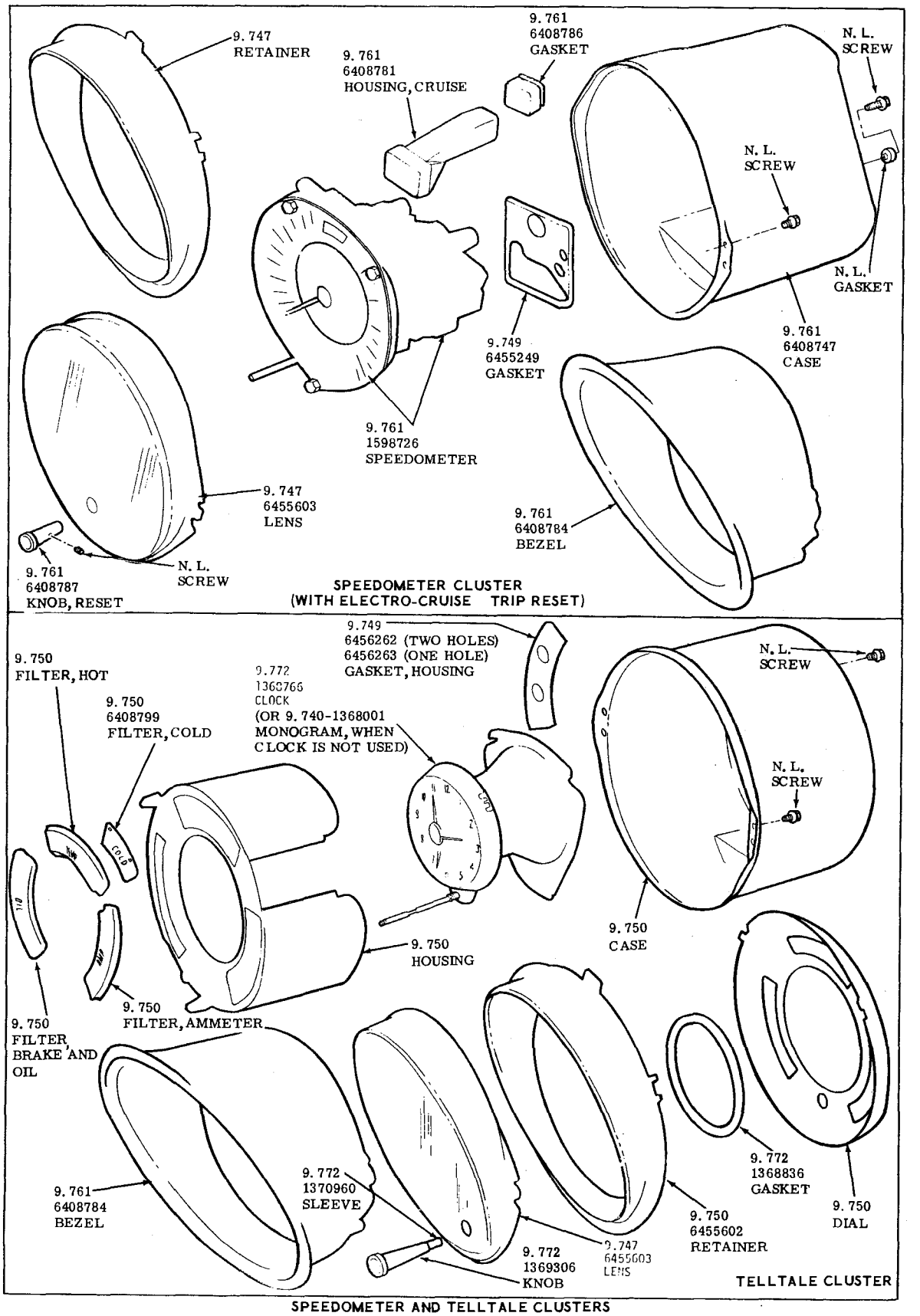

SPEEDOMETER AND TELLTALE CLUSTERS
1965-LESABRE-WILDCAT-ELECTRA 225

GROUP 9

AIR CONDITIONING

INSTRUMENT CLUSTER PARTS

HEATER AND AIR CONDITIONING CONTROLS

MEMORANDA

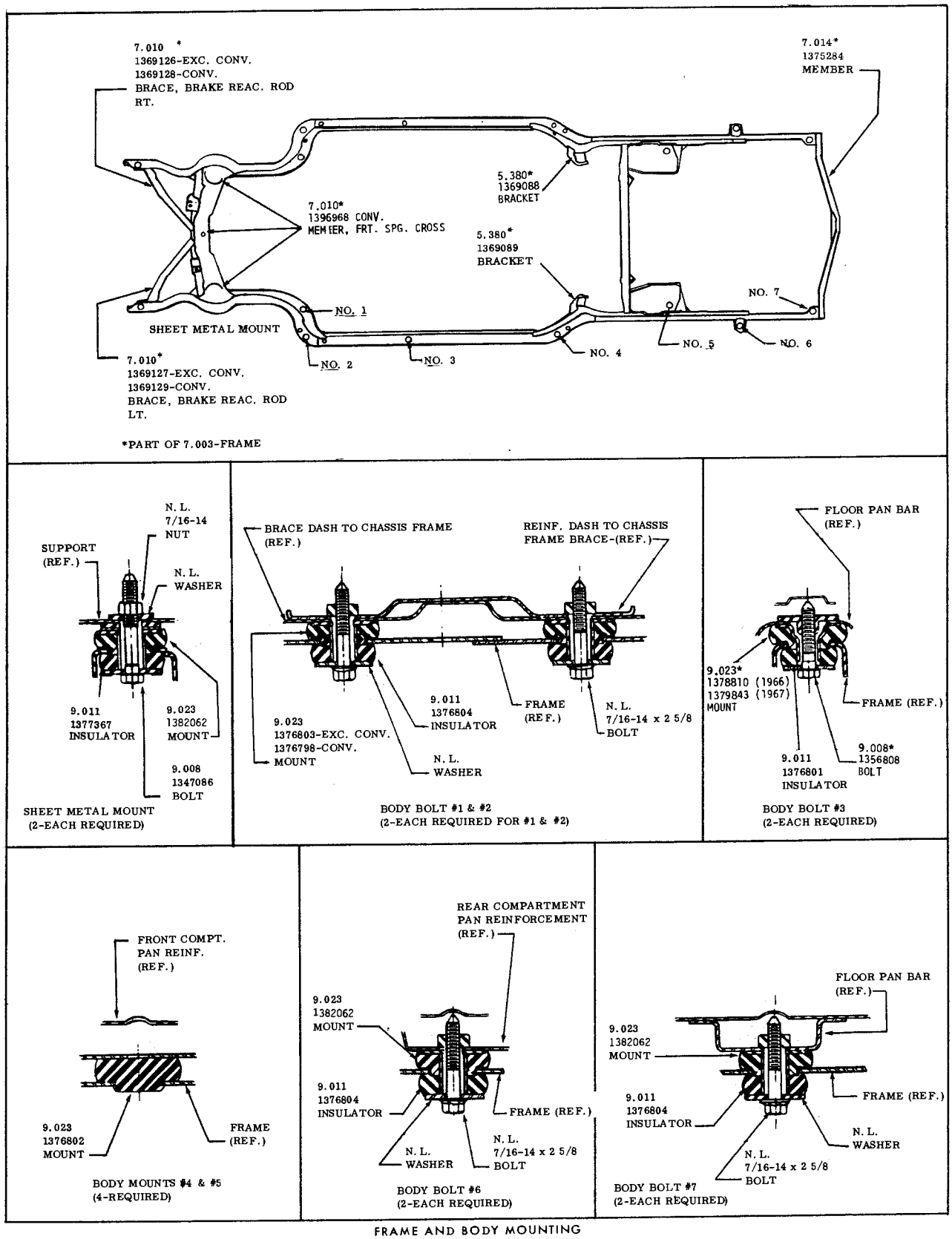

FRAME AND BODY MOUNTING
1966-1970 . LESABRE - WILDCAT - ELECTRA 225

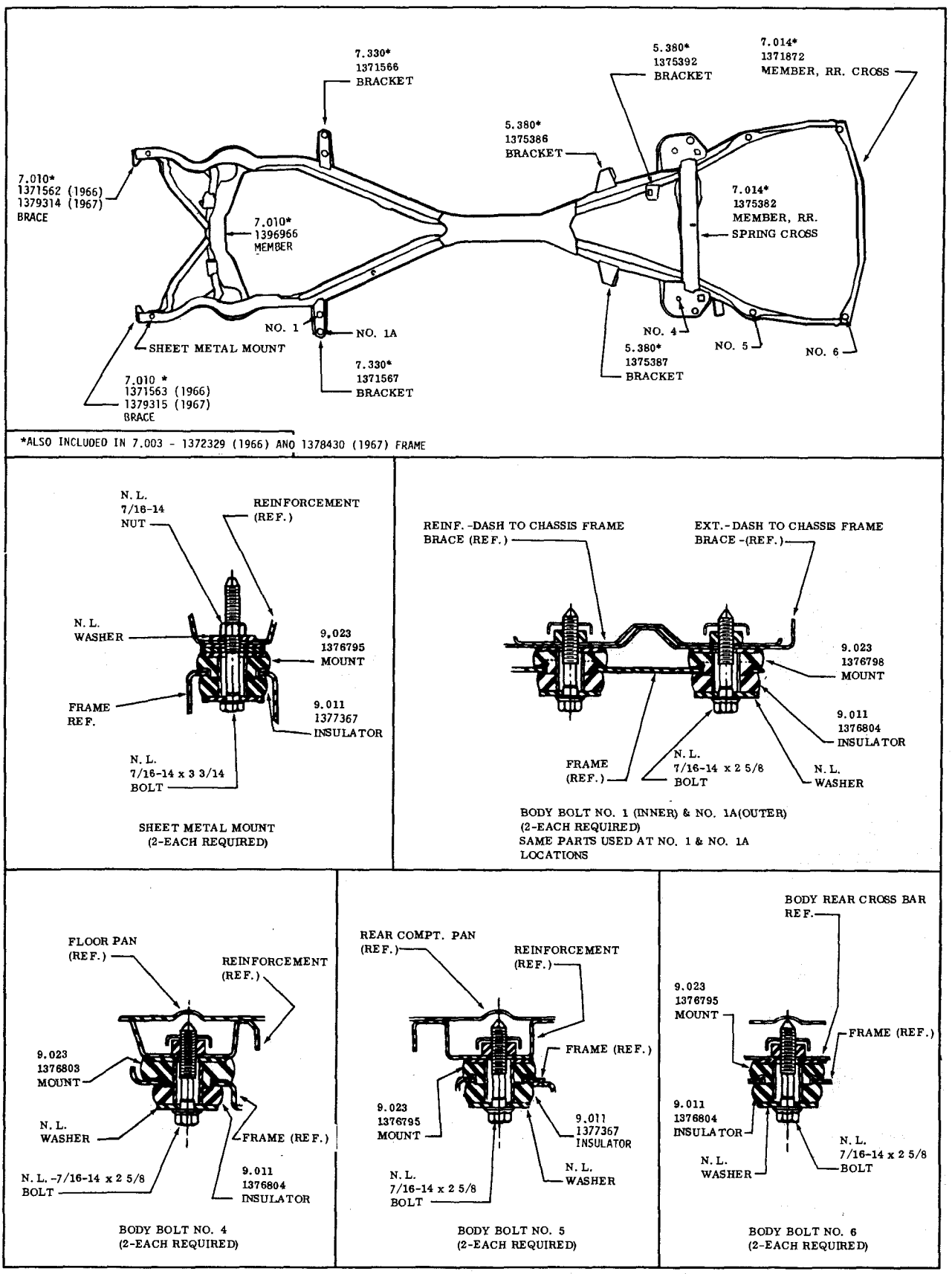

FRAME AND BODY MOUNTING
1966-1970 - RIVIERA

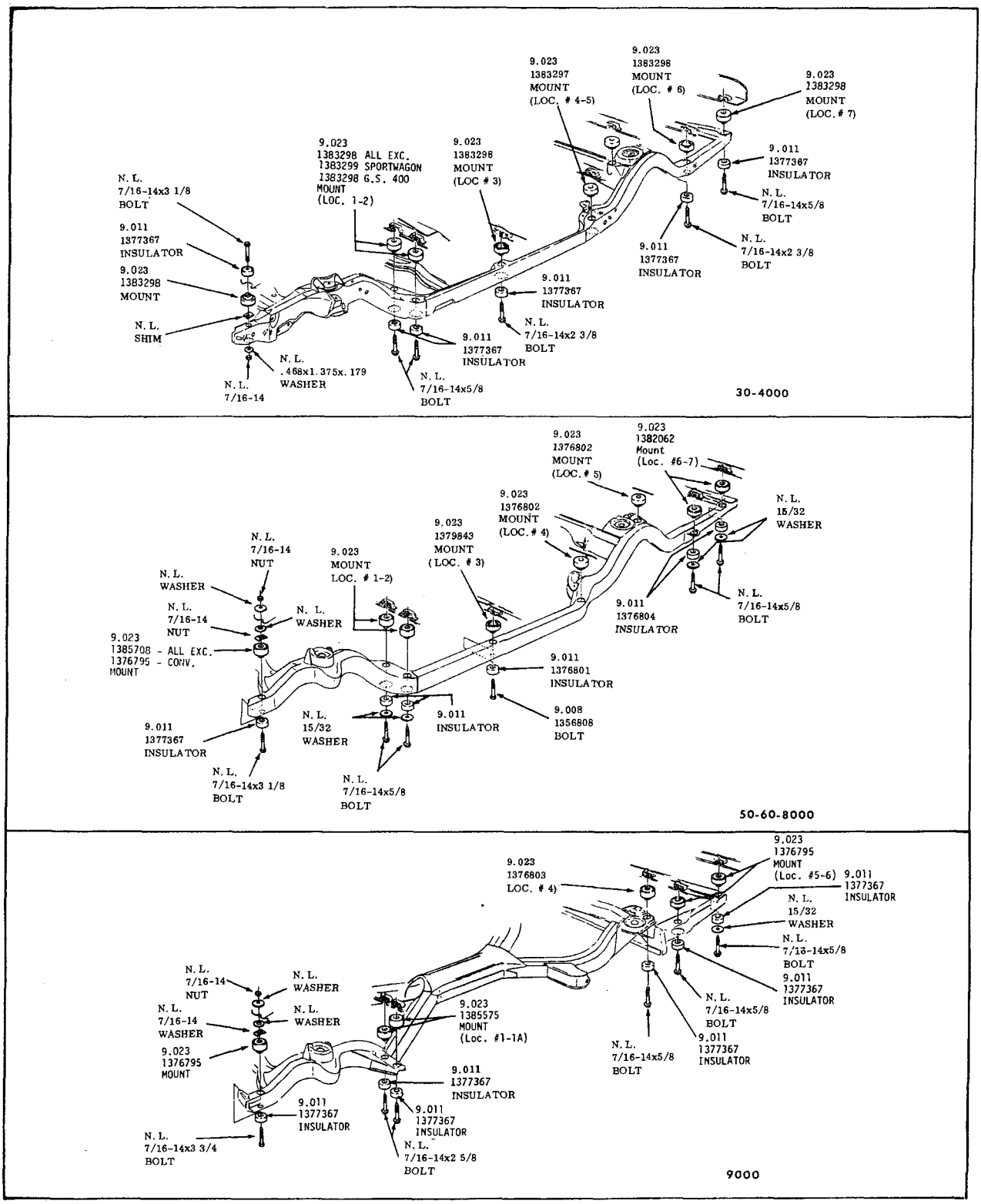

BODY MOUNTING
1968 - ALL

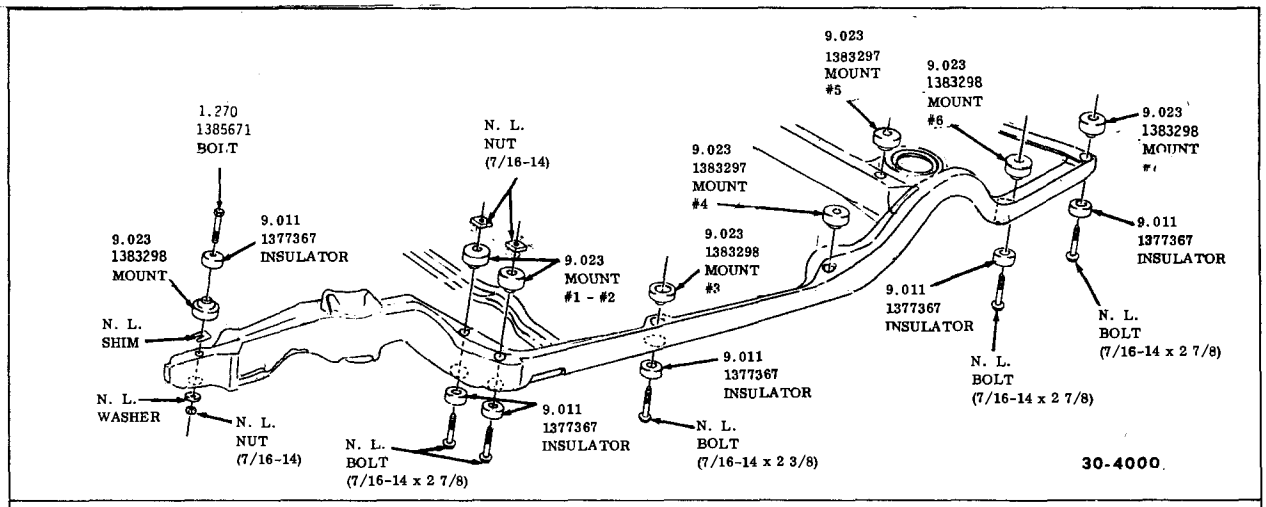

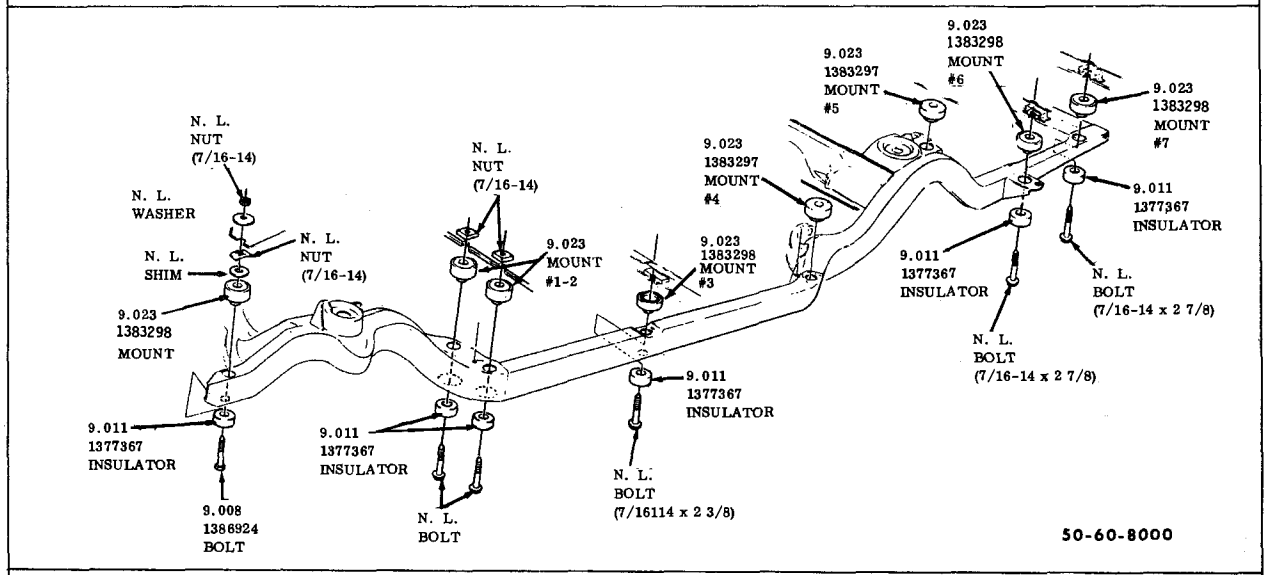

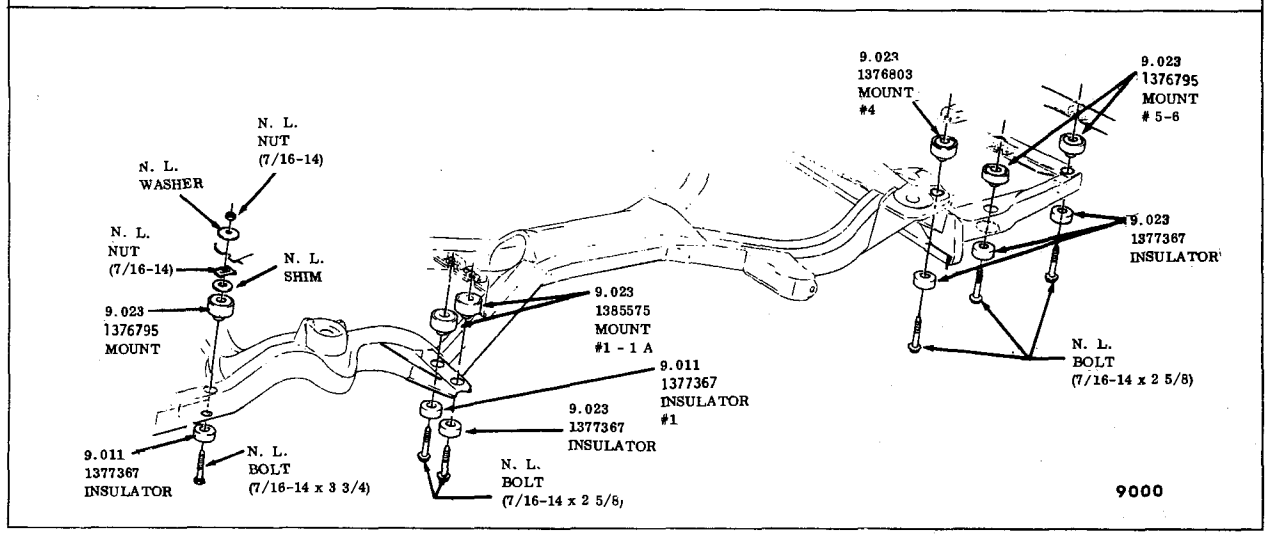

BODY MOUNTING
1969-1970 - ALL

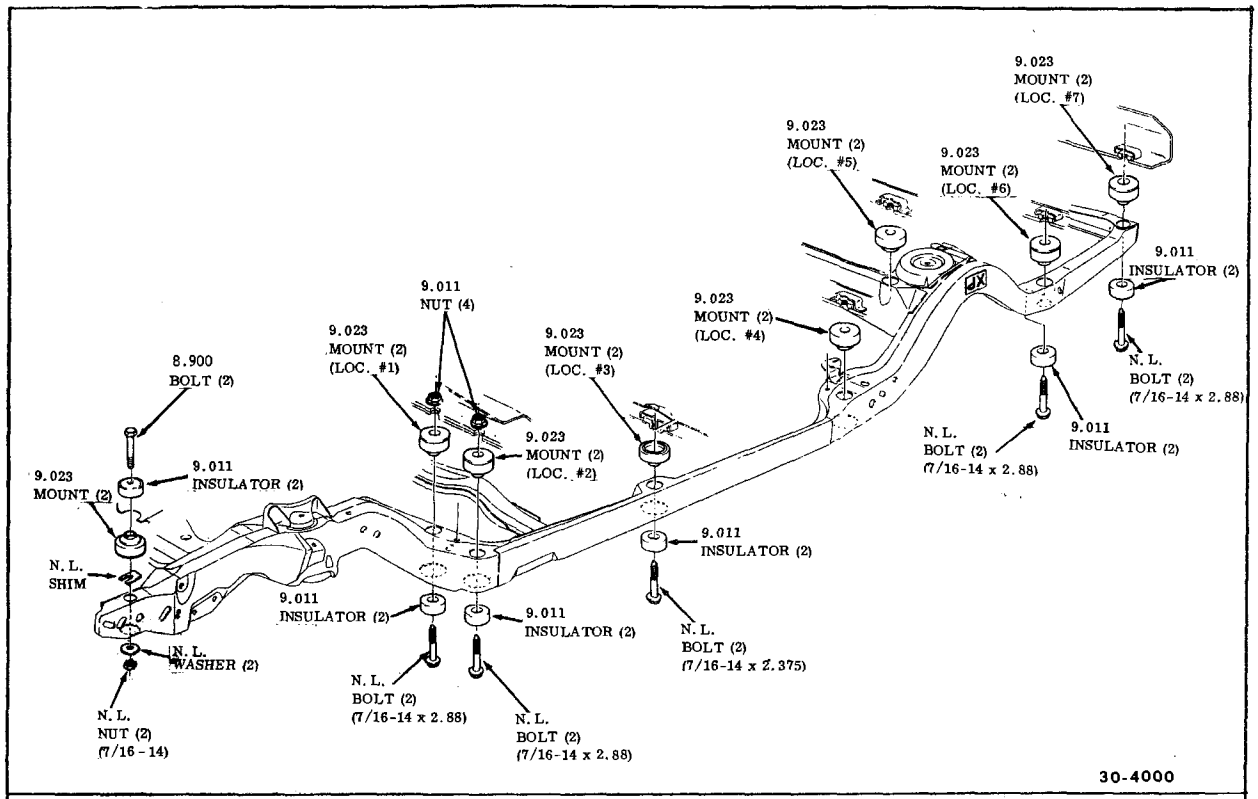

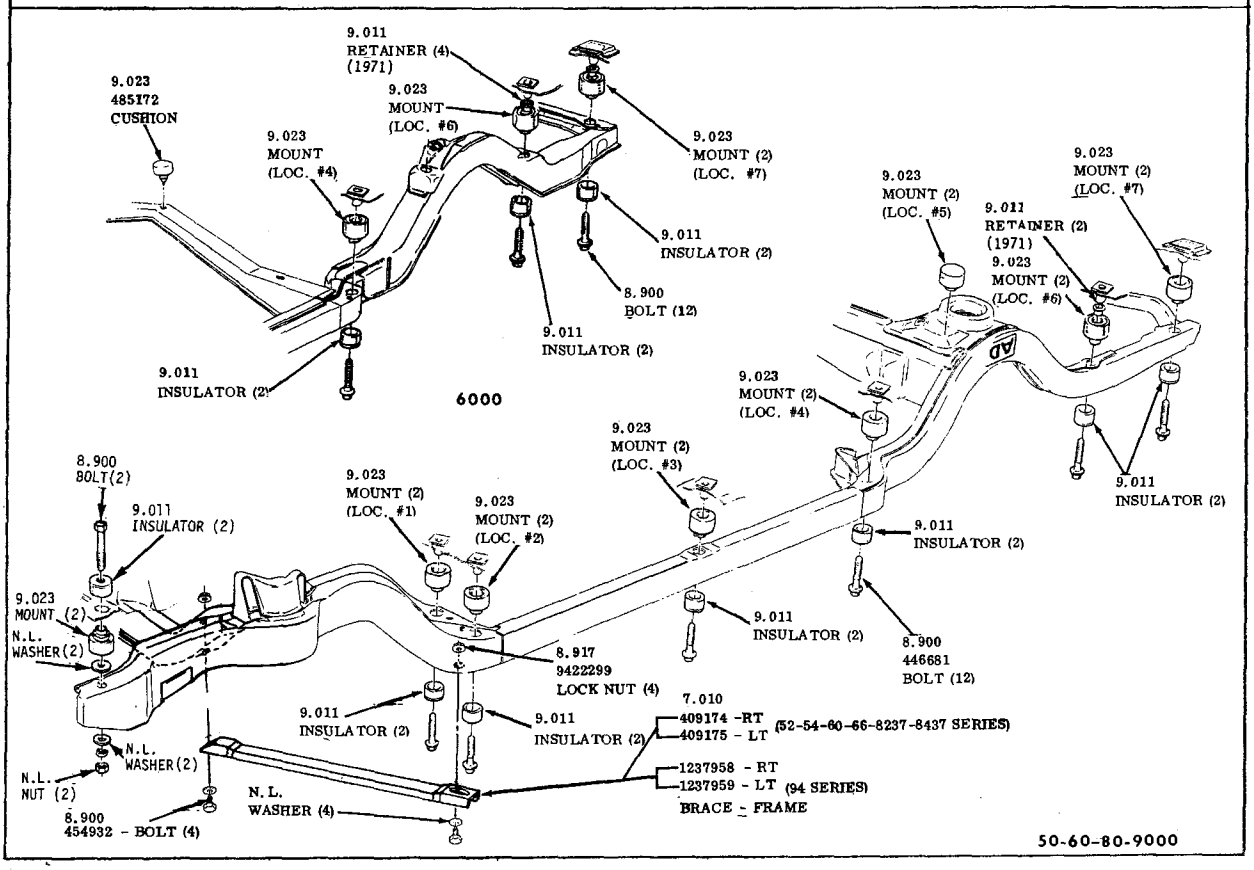

BODY MOUNTING

1971-1972 ALL

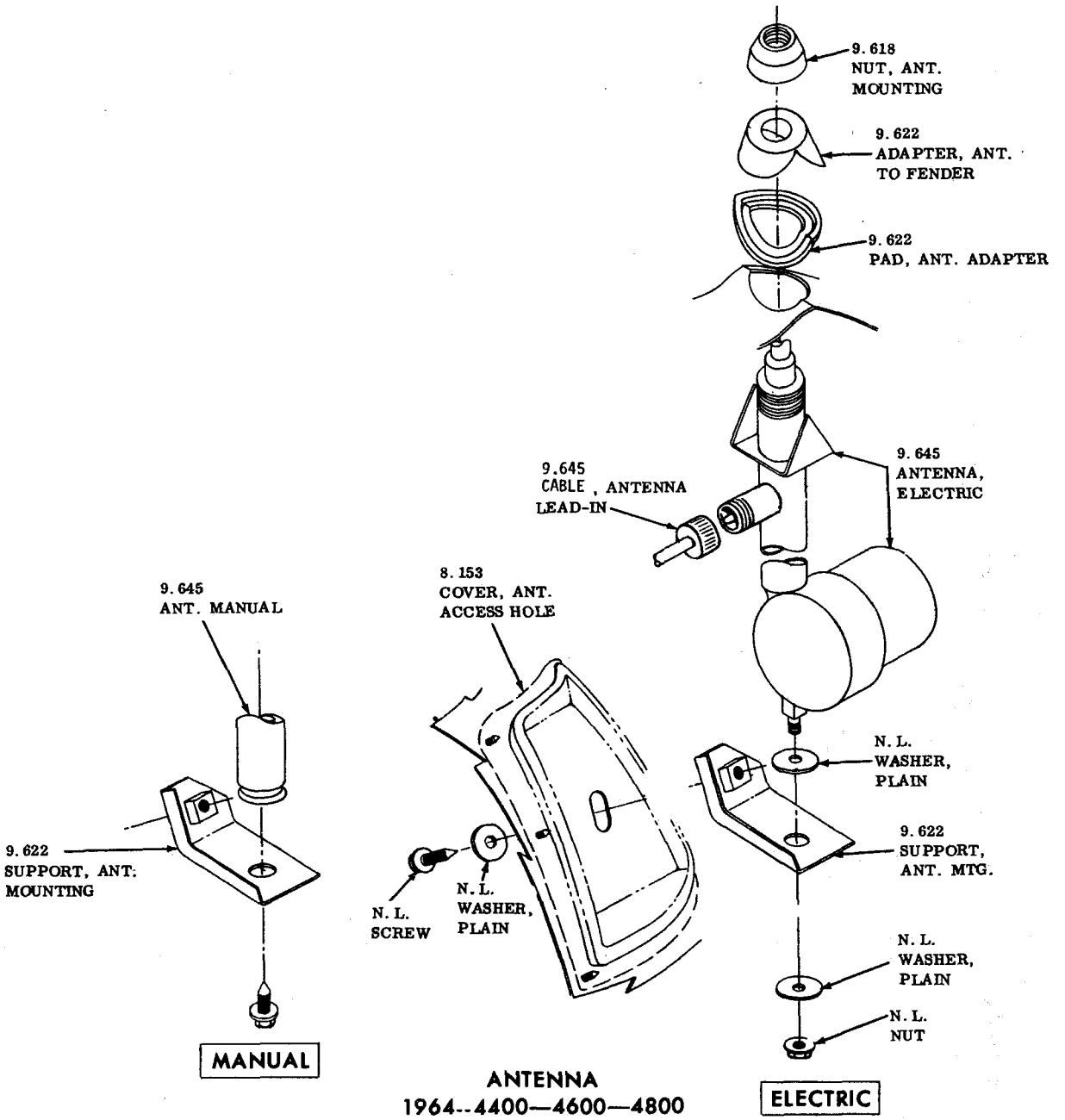

ANTENNA
1964--4400—4600—4800

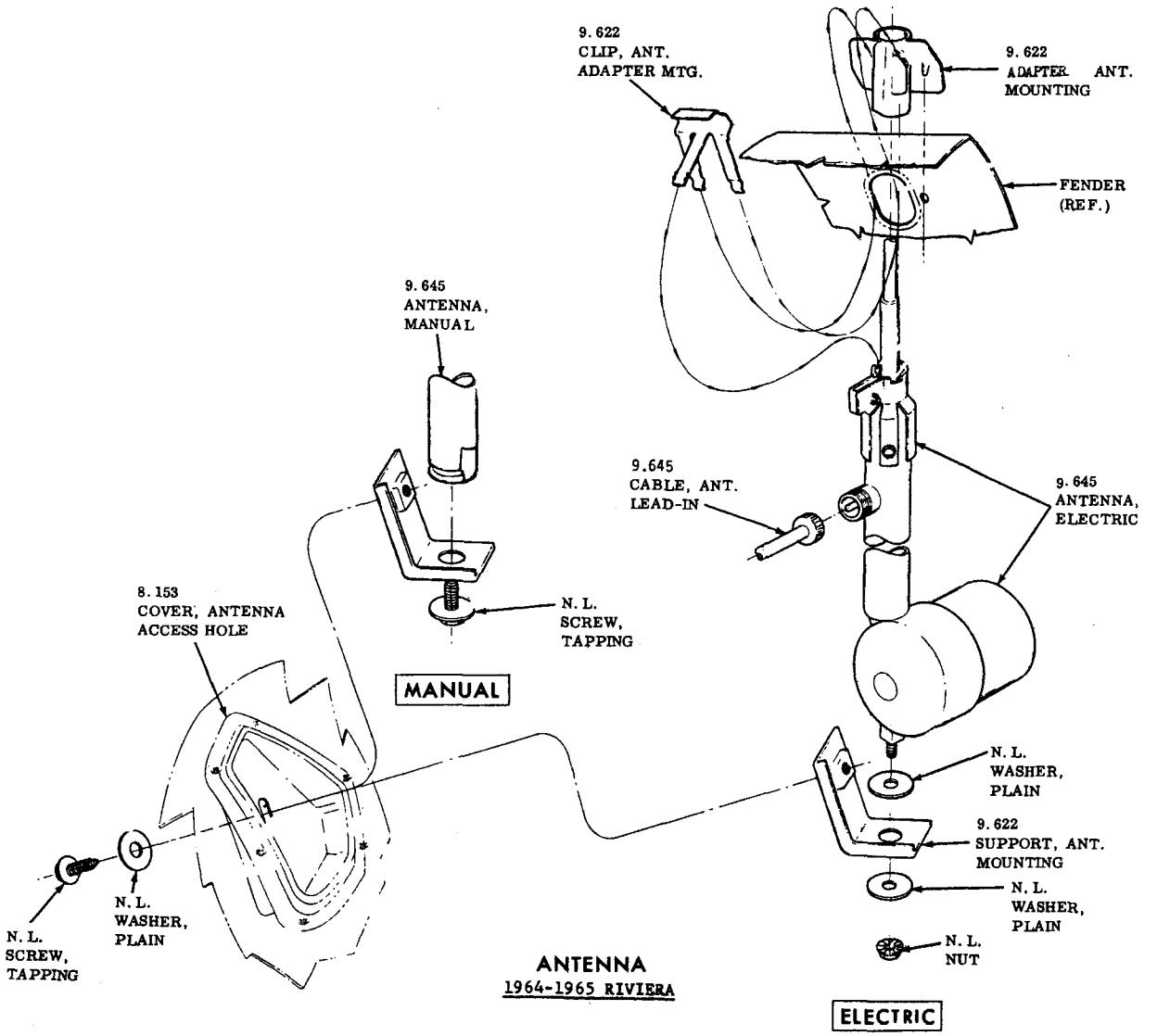

ANTENNA
1964-1965 RIVIERA

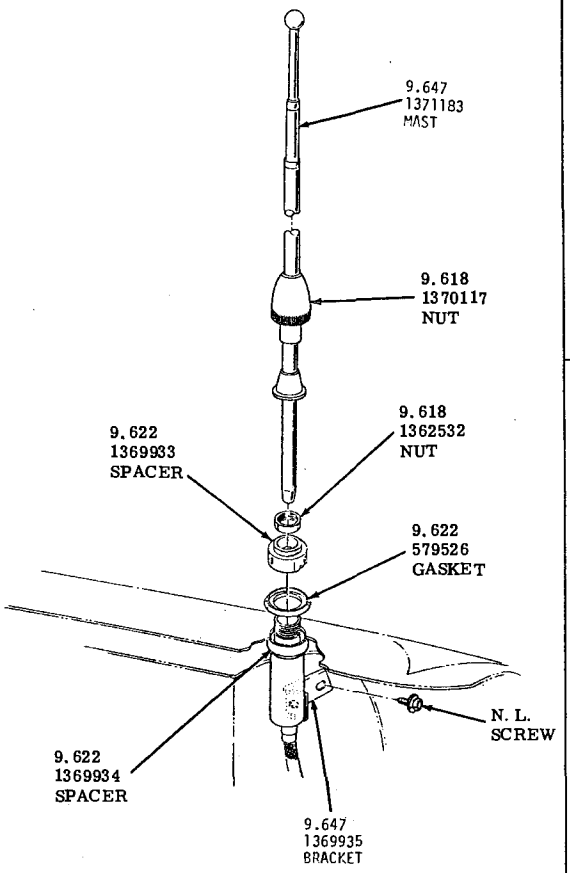

MANUAL ANTENNA

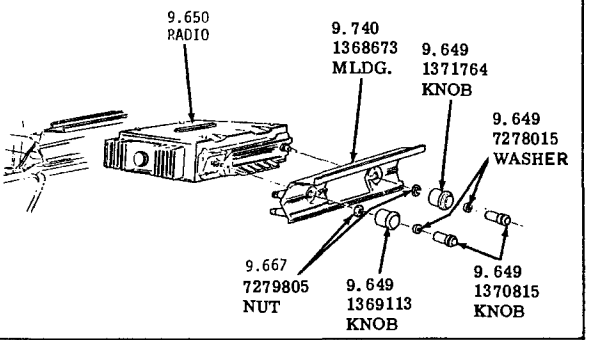

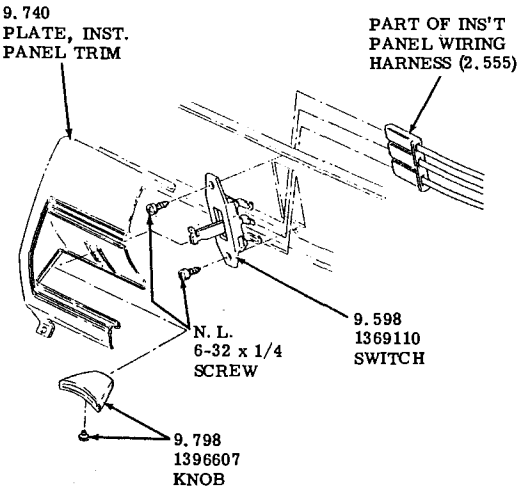

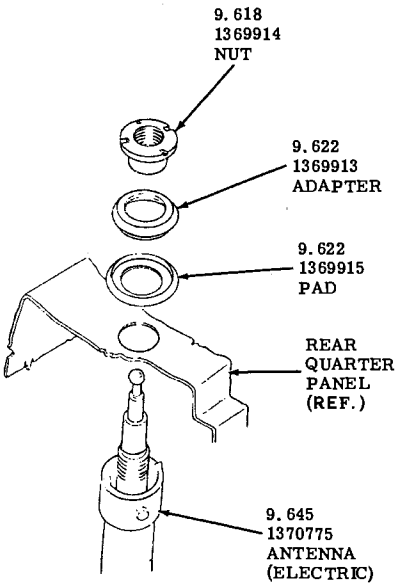

ELECTRIC ANTENNA

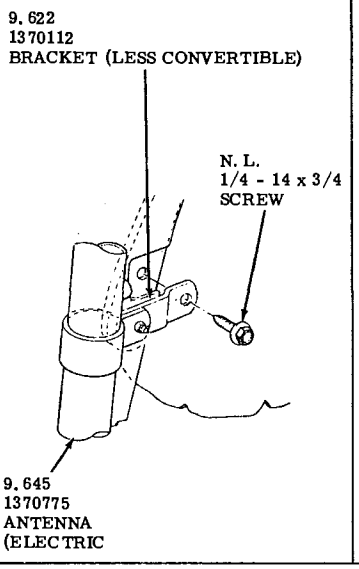

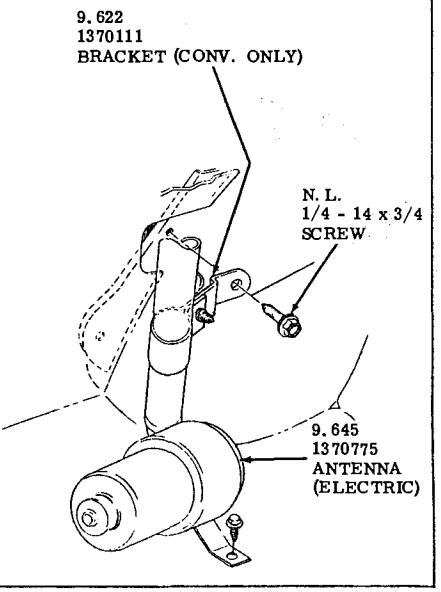

RADIO AND ANTENNA
1965-LESABRE-WILDCAT-ELECTRA 225

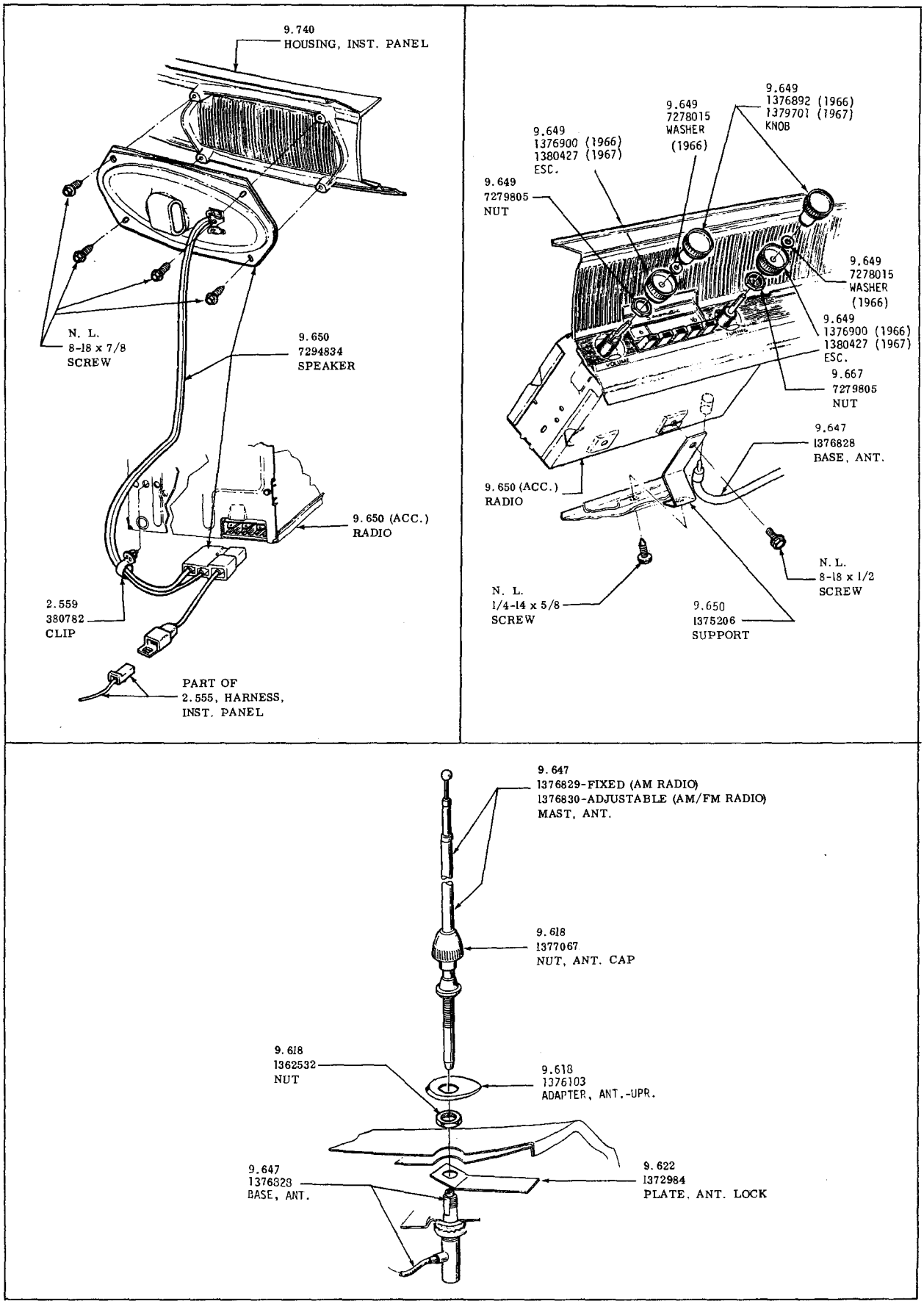

RADIO AND ANTENNA

1966-1967 -SPECIAL-SKYLARK-SKYLARK GRAN SPORT

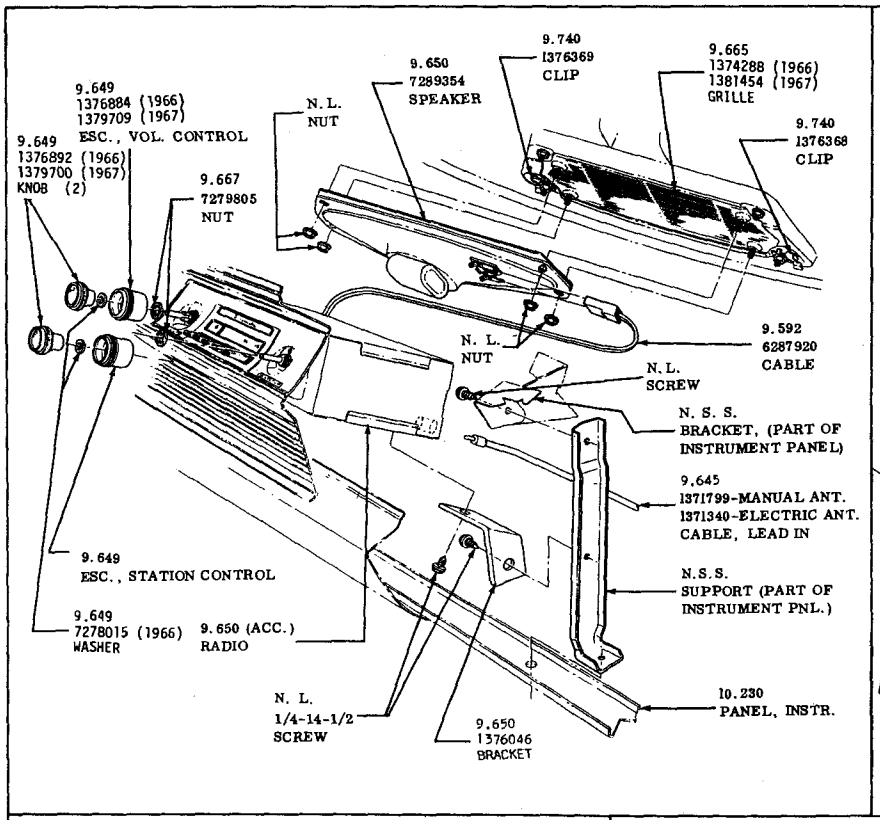

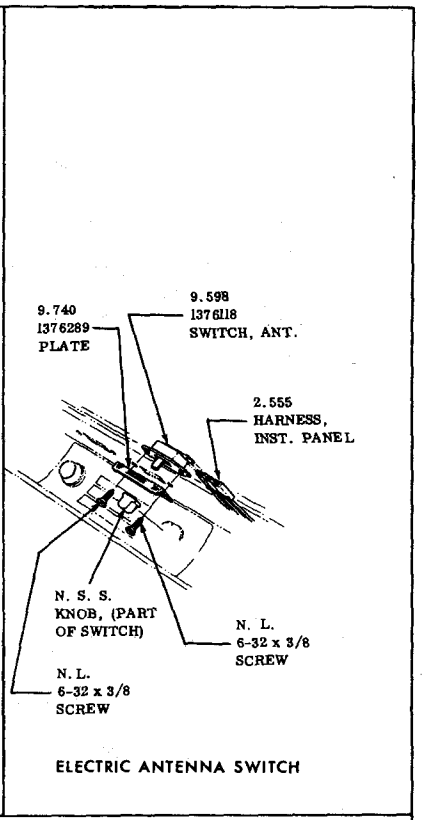

ELECTRIC ANTENNA SWITCH

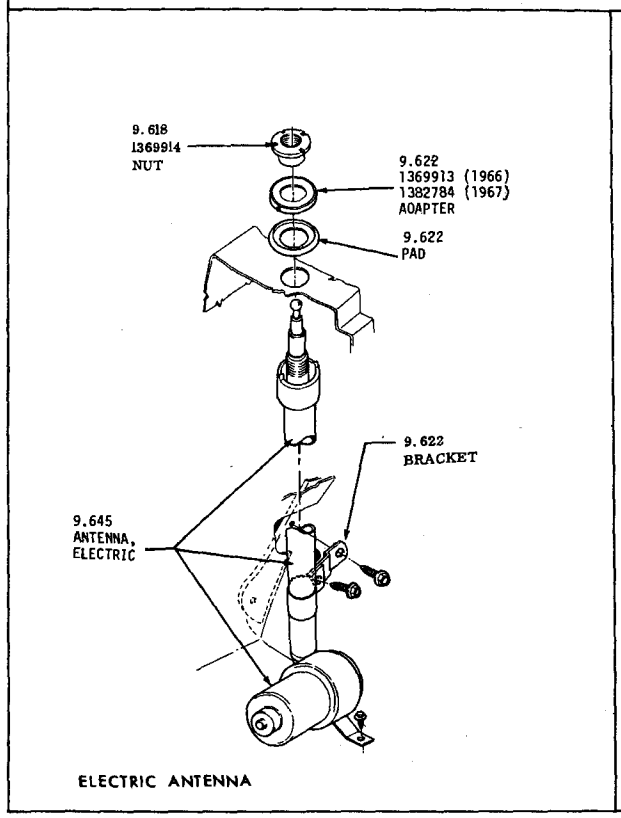

ELECTRIC ANTENNA

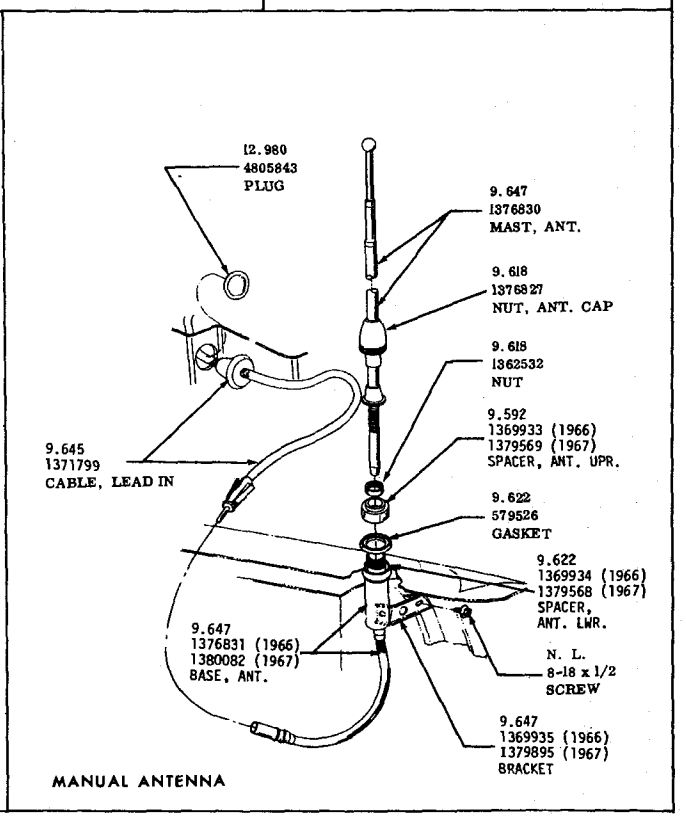

MANUAL ANTENNA

RADIO AND ANTENNA

1966-1967-LE SABRE-WILDCAT-ELECTRA 225

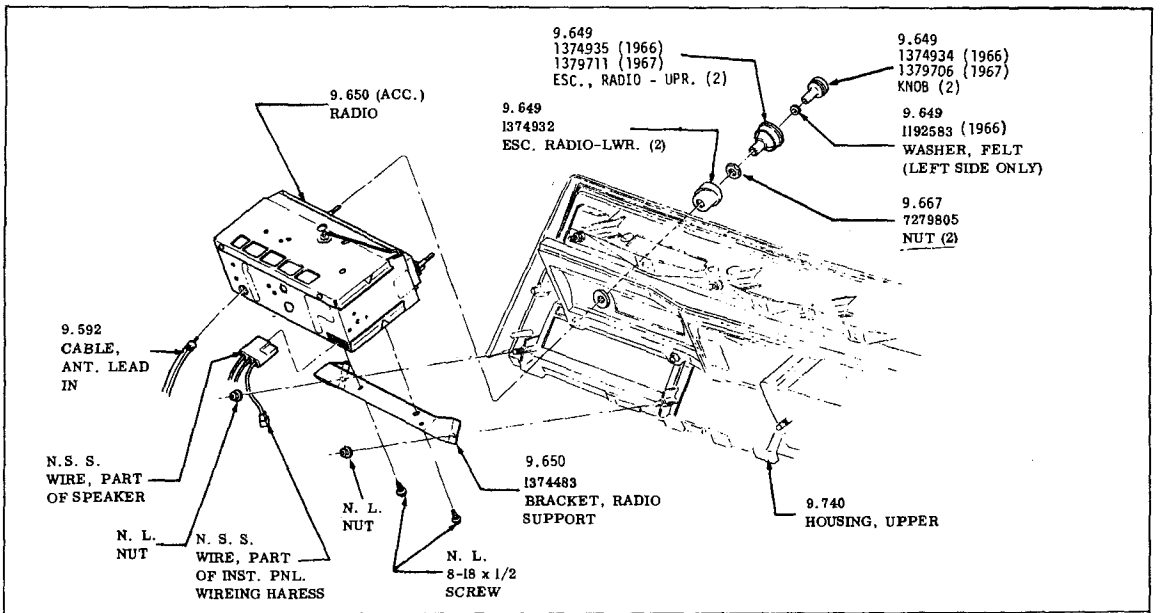

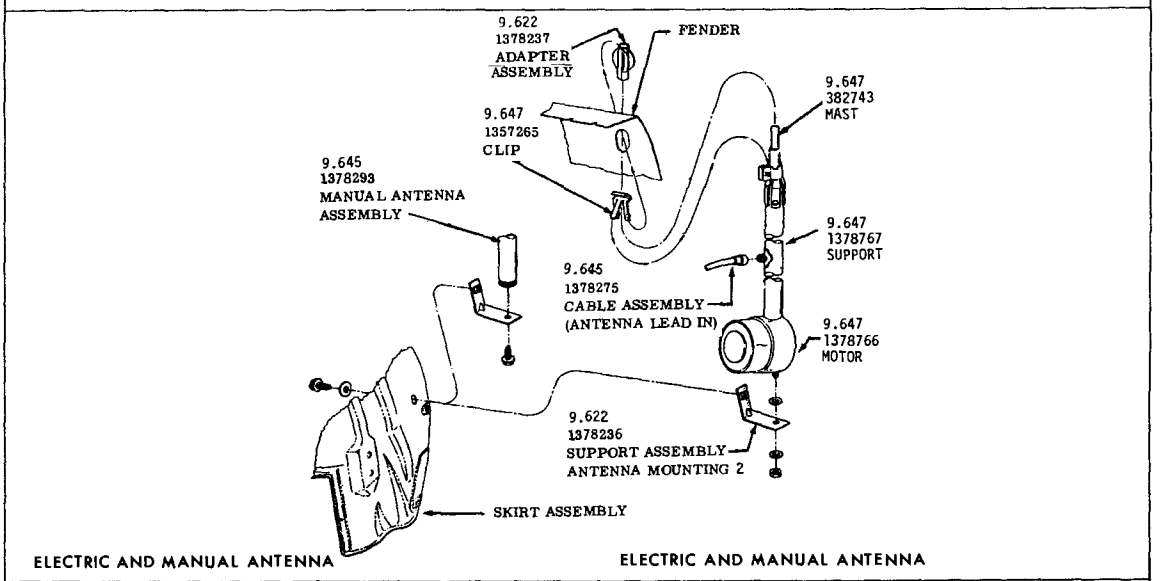

ELECTRIC AND MANUAL ANTENNA

ELECTRIC AND MANUAL ANTENNA

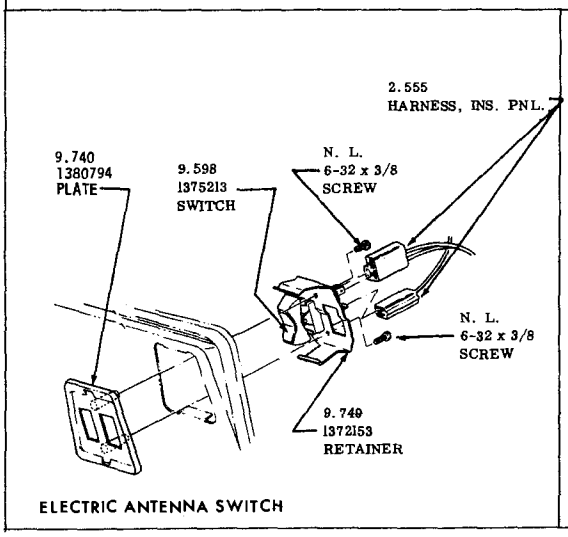

ELECTRIC ANTENNA SWITCH

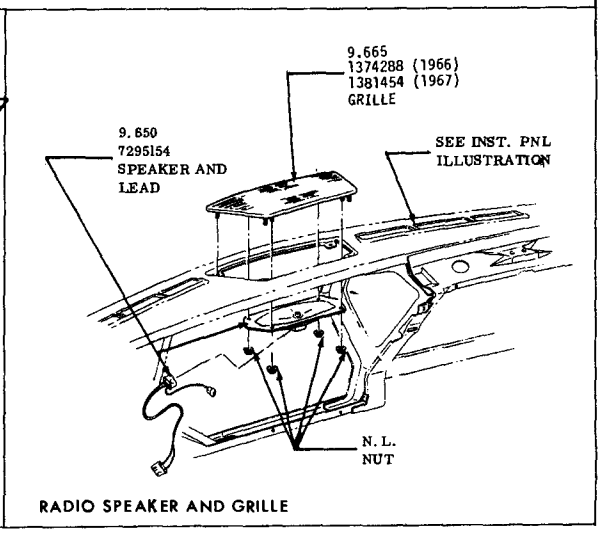

RADIO SPEAKER AND GRILLE

RADIO AND ANTENNA
1966-1967 —RIVIERA

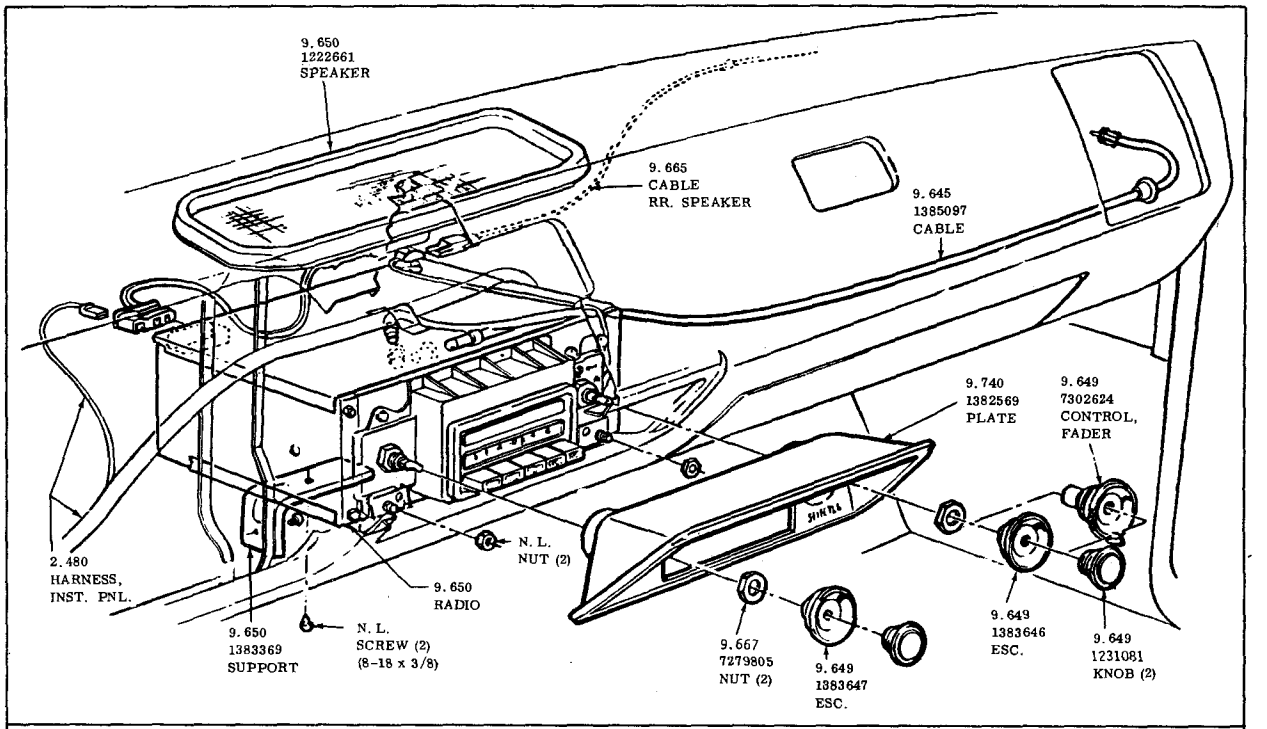

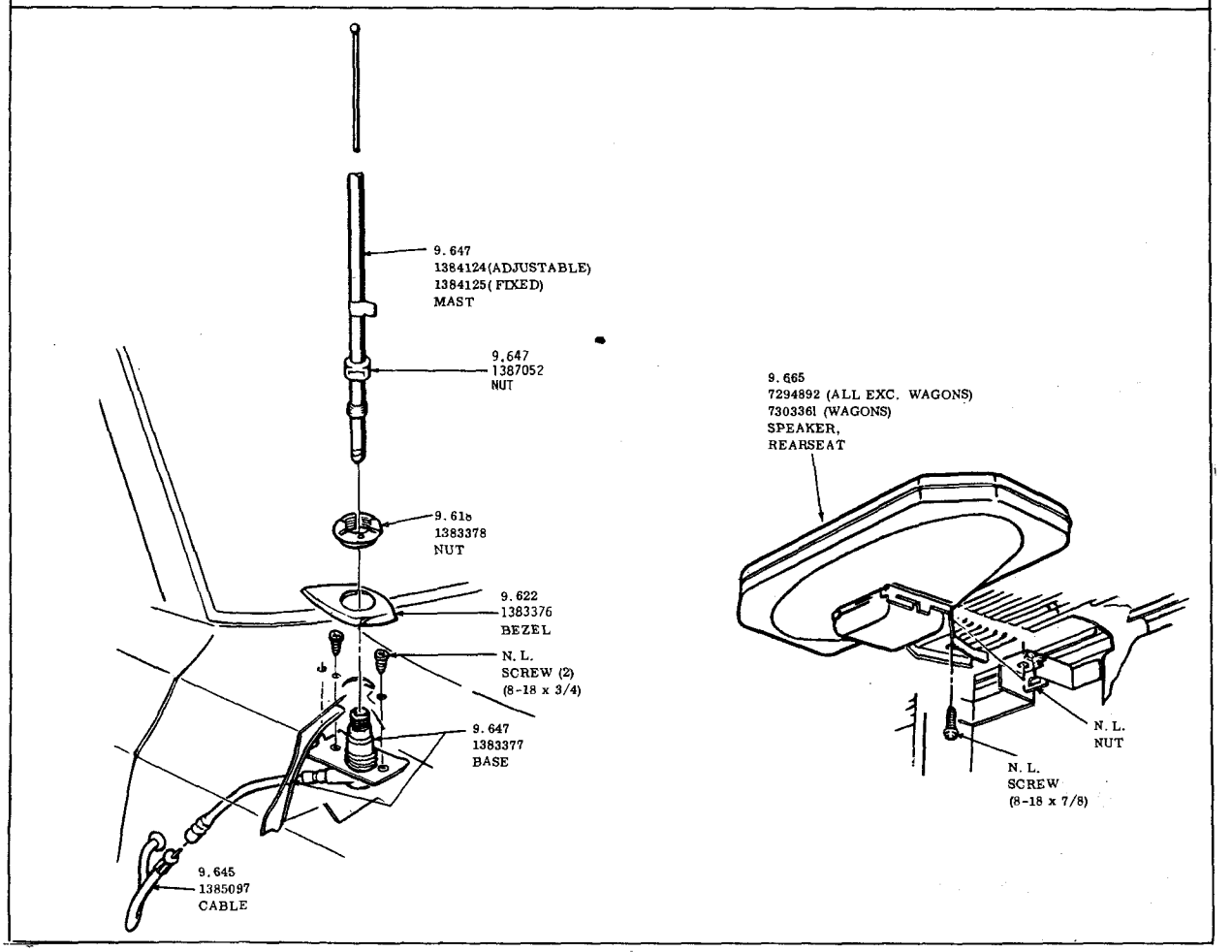

RADIO & ANTENNA
1968-1969 —30—4000

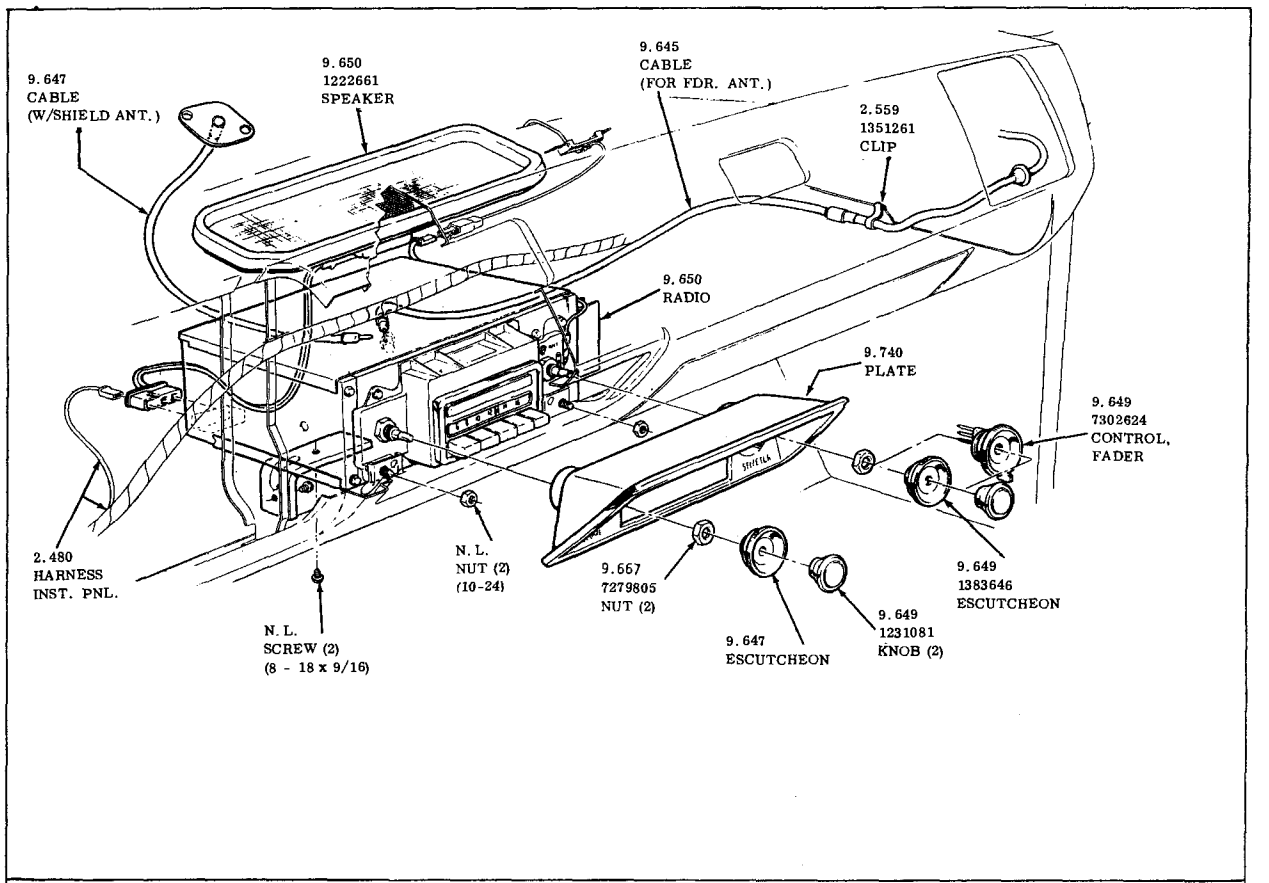

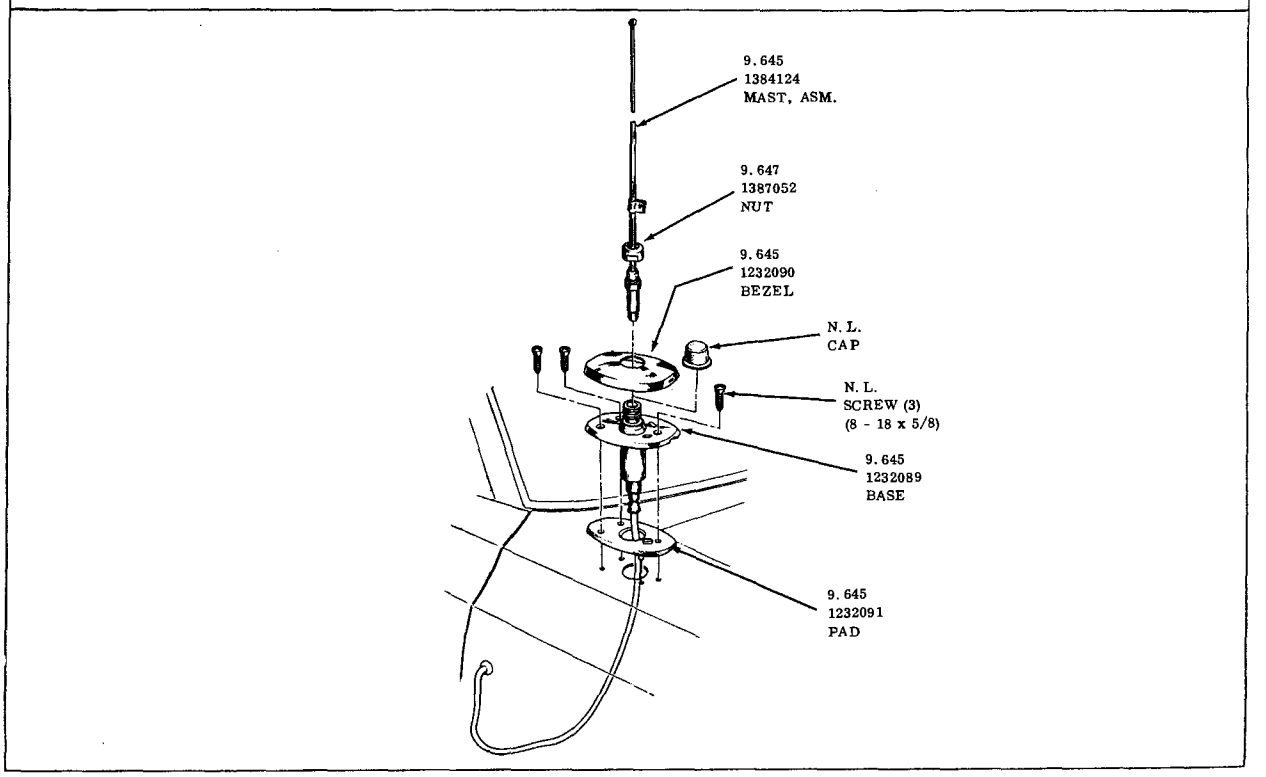

RADIO & ANTENNA
1970

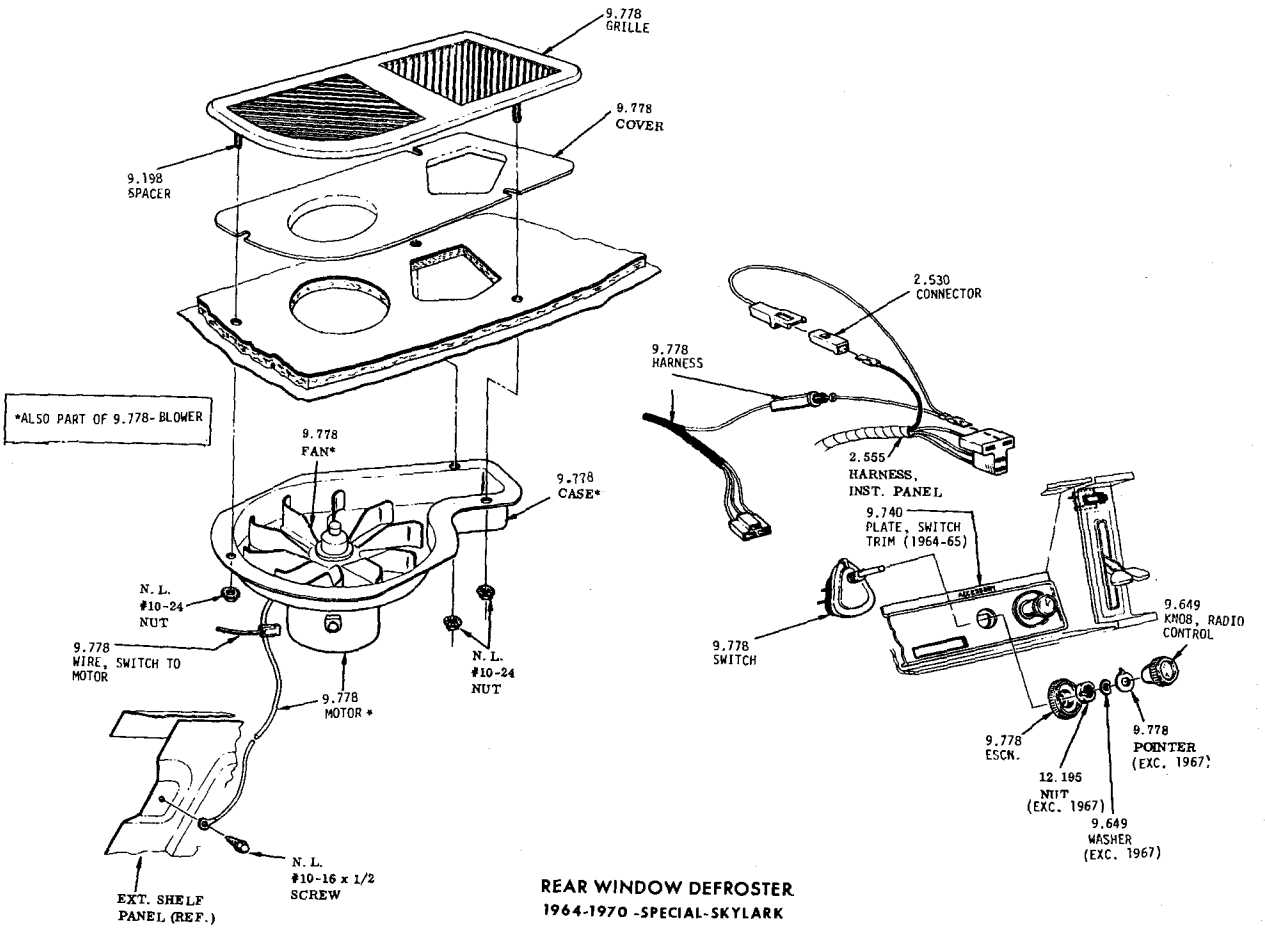

REAR WINDOW DEFROSTER
1964-1970 -SPECIAL-SKYLARK

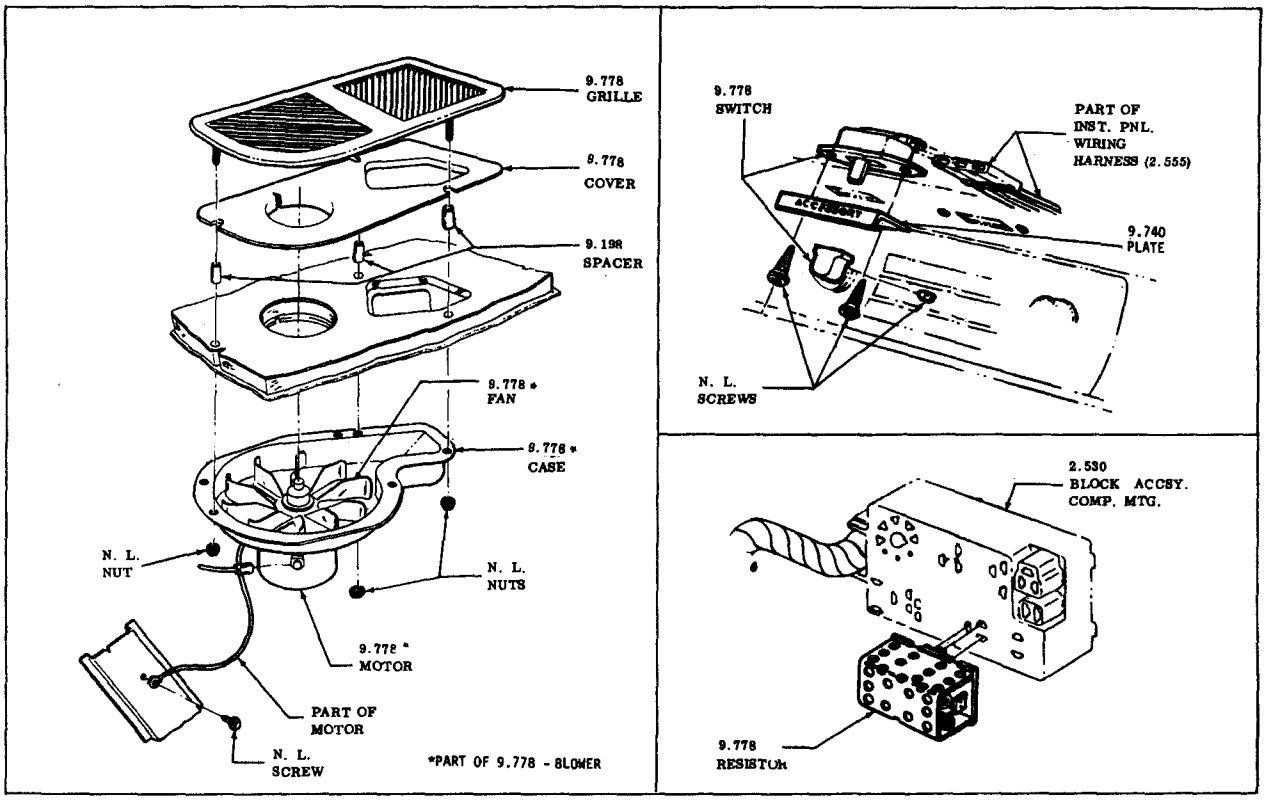

LE SABRE—WILDCAT—ELECTRA 225

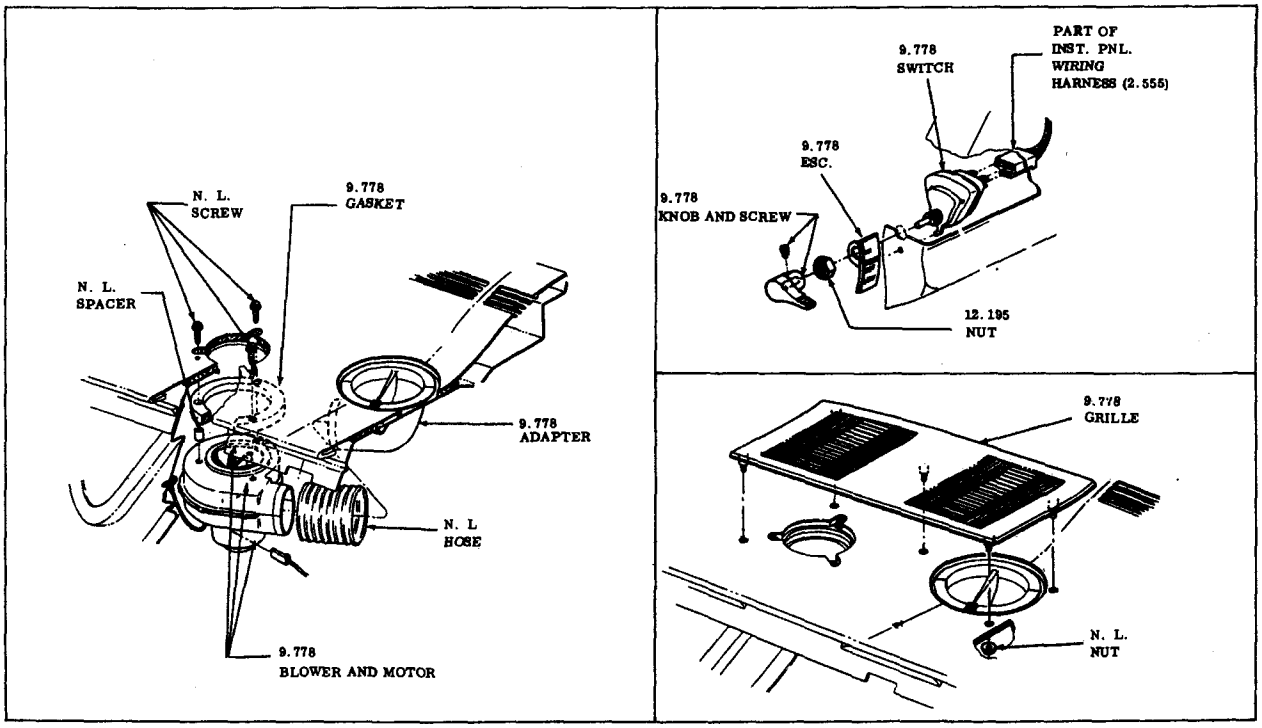

RIVIERA

REAR WINDOW DEFROSTER

1966-1970—LE SABRE—WILDCAT—ELECTRA 225—RIVIERA

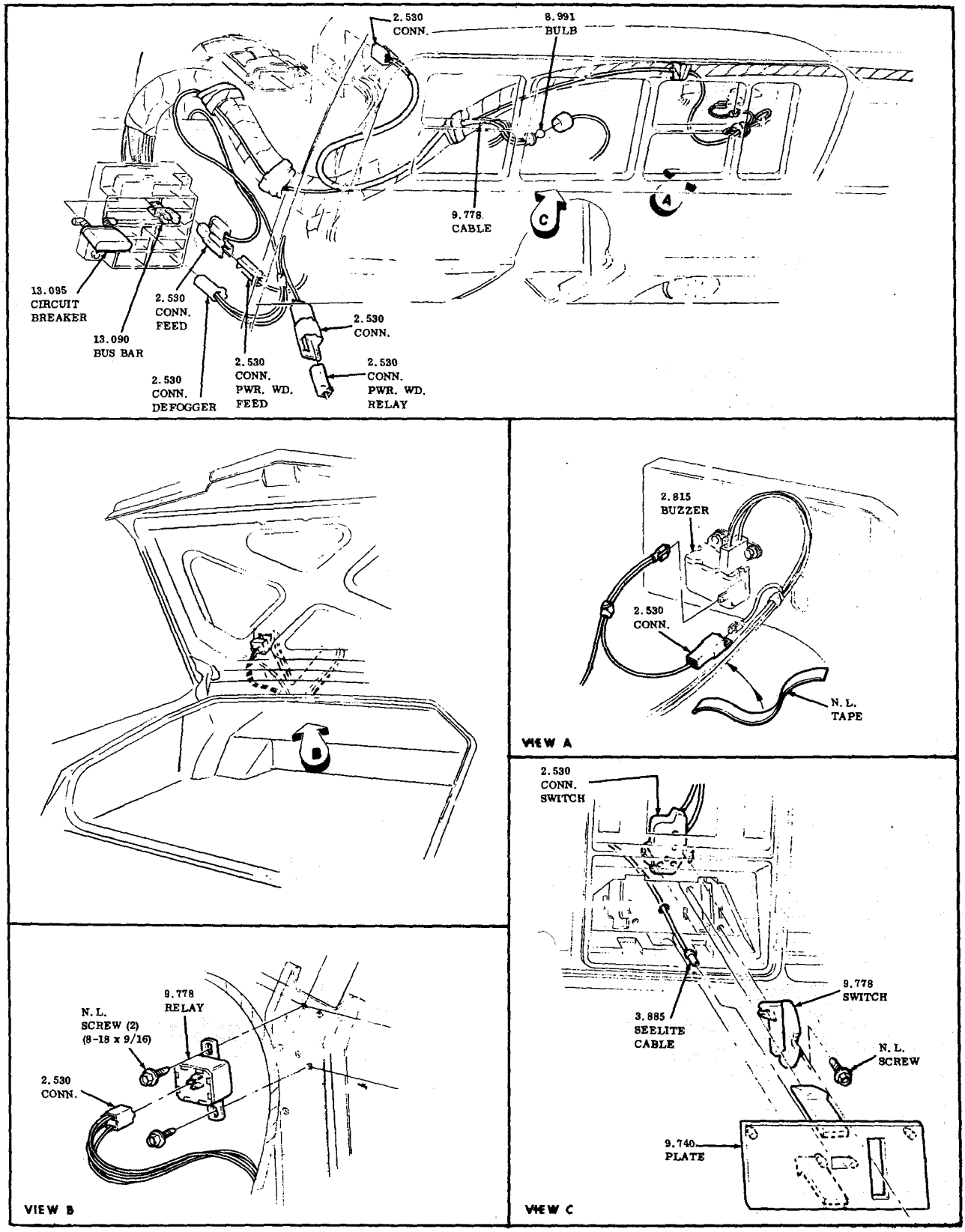

HEATED BACK GLASS DEFOGGER
1966-1970-9000

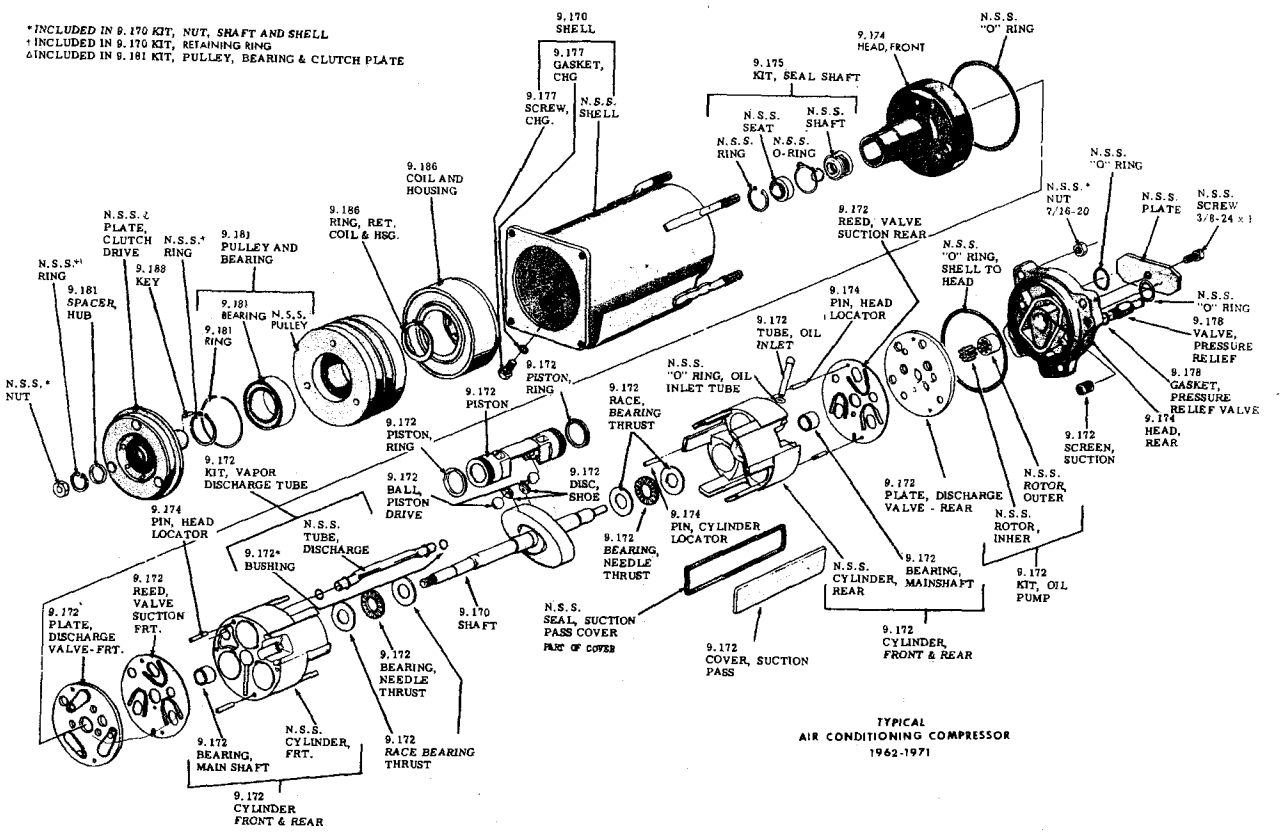
*INCLUDED IN 9.170 KIT, NUT, SHAFT AND SHELL
†INCLUDED IN 9.170 KIT, RETAINING RING
△INCLUDED IN 9.181 KIT, PULLEY, BEARING & CLUTCH PLATE
9.170 SHELL
9.177 GASKET, CHG
9.177 SCREW, CHG.
N.S.S. SHELL
9.174 HEAD, FRONT
N.S.S. "O" RING
9.175 KIT, SEAL SHAFT
N.S.S. SEAT
N.S.S. SHAFT
N.S.S. RING
N.S.S. O-RING
9.186 COIL AND HOUSING
9.186 RING, RET. COIL & HSG.
N.S.S. △ PLATE, CLUTCH DRIVE
N.S.S.* RING
9.181 PULLEY AND BEARING
N.S.S.† RING
9.188 KEY
9.181 SPACER, HUB
9.181 BEARING
N.S.S. PULLEY
9.181 RING
N.S.S.* NUT
9.172 KIT, VAPOR DISCHARGE TUBE
9.174 PIN, HEAD LOCATOR
9.172 PISTON, RING
9.172 PISTON
9.172 PISTON, RING
9.172 BALL, PISTON DRIVE
9.172 DISC, SHOE
9.172 RACE, BEARING THRUST
N.S.S. "O" RING, OIL INLET TUBE
9.172 TUBE, OIL INLET
9.174 PIN, HEAD LOCATOR
9.172 REED, VALVE SUCTION REAR
N.S.S. "O" RING, SHELL TO HEAD
N.S.S.* NUT 7/16-20
N.S.S. PLATE
N.S.S. SCREW 3/8-24 x 1
N.S.S. "O" RING
9.178 VALVE, PRESSURE RELIEF
9.178 GASKET, PRESSURE RELIEF VALVE
9.174 HEAD, REAR
9.172 SCREEN, SUCTION
N.S.S. ROTOR, OUTER
N.S.S. ROTOR, INNER
9.172 PLATE, DISCHARGE VALVE - REAR
9.172 KIT, OIL PUMP
9.174 PIN, CYLINDER LOCATOR
9.172 BEARING, NEEDLE THRUST
N.S.S. CYLINDER, REAR
9.172 BEARING, MAINSHAFT
9.172 CYLINDER, FRONT & REAR
N.S.S. SEAL, SUCTION PASS COVER
PART OF COVER
9.172 COVER, SUCTION PASS
9.172* BUSHING
N.S.S. TUBE, DISCHARGE
9.170 SHAFT
9.172 REED, VALVE SUCTION FRT.
9.172* PLATE, DISCHARGE VALVE-FRT.
9.172 BEARING, NEEDLE THRUST
N.S.S. CYLINDER, FRT.
9.172 BEARING, MAIN SHAFT
9.172 RACE BEARING THRUST
9.172 CYLINDER FRONT & REAR
TYPICAL
AIR CONDITIONING COMPRESSOR
1962-1971

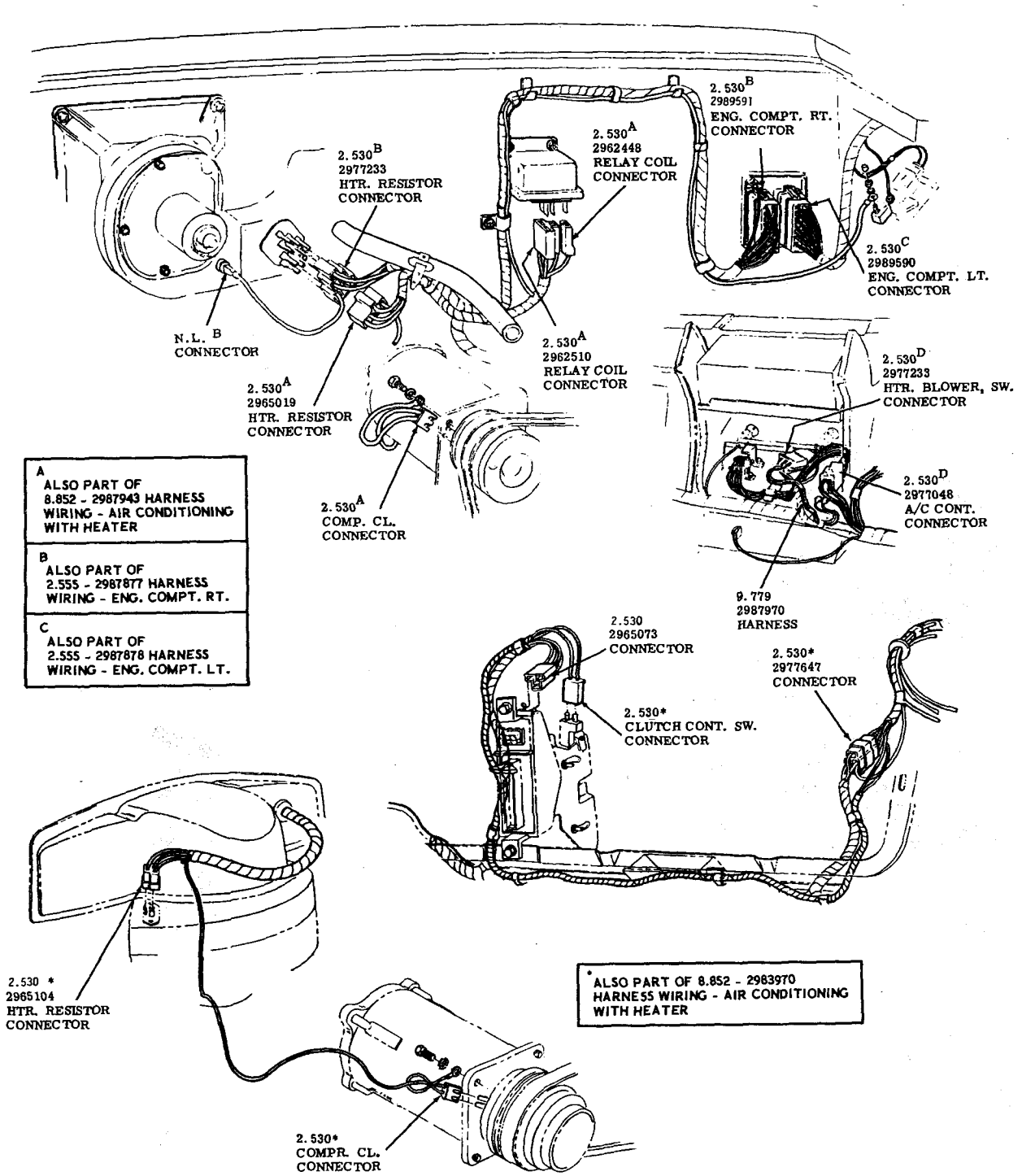

A ALSO PART OF 8.852 - 2987943 HARNESS WIRING - AIR CONDITIONING WITH HEATER
B ALSO PART OF 2.555 - 2987877 HARNESS WIRING - ENG. COMPT. RT.
C ALSO PART OF 2.555 - 2987878 HARNESS WIRING - ENG. COMPT. LT.

*ALSO PART OF 8.852 - 2983970
HARNESS WIRING - AIR CONDITIONING
WITH HEATER

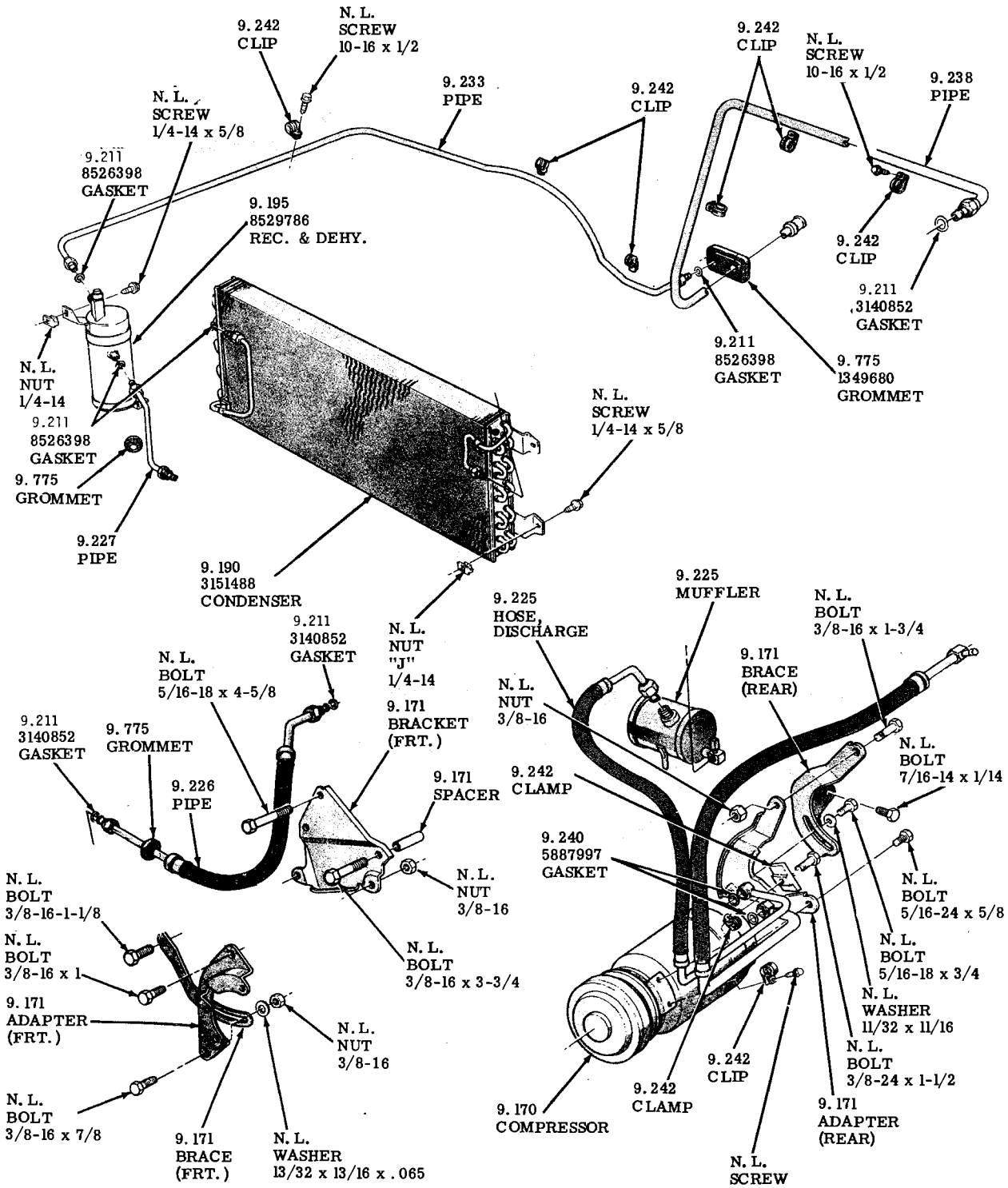

AIR CONDITIONING UNIT - 1961 - 40 - 41 - 4300 2ND TYPE - 1962

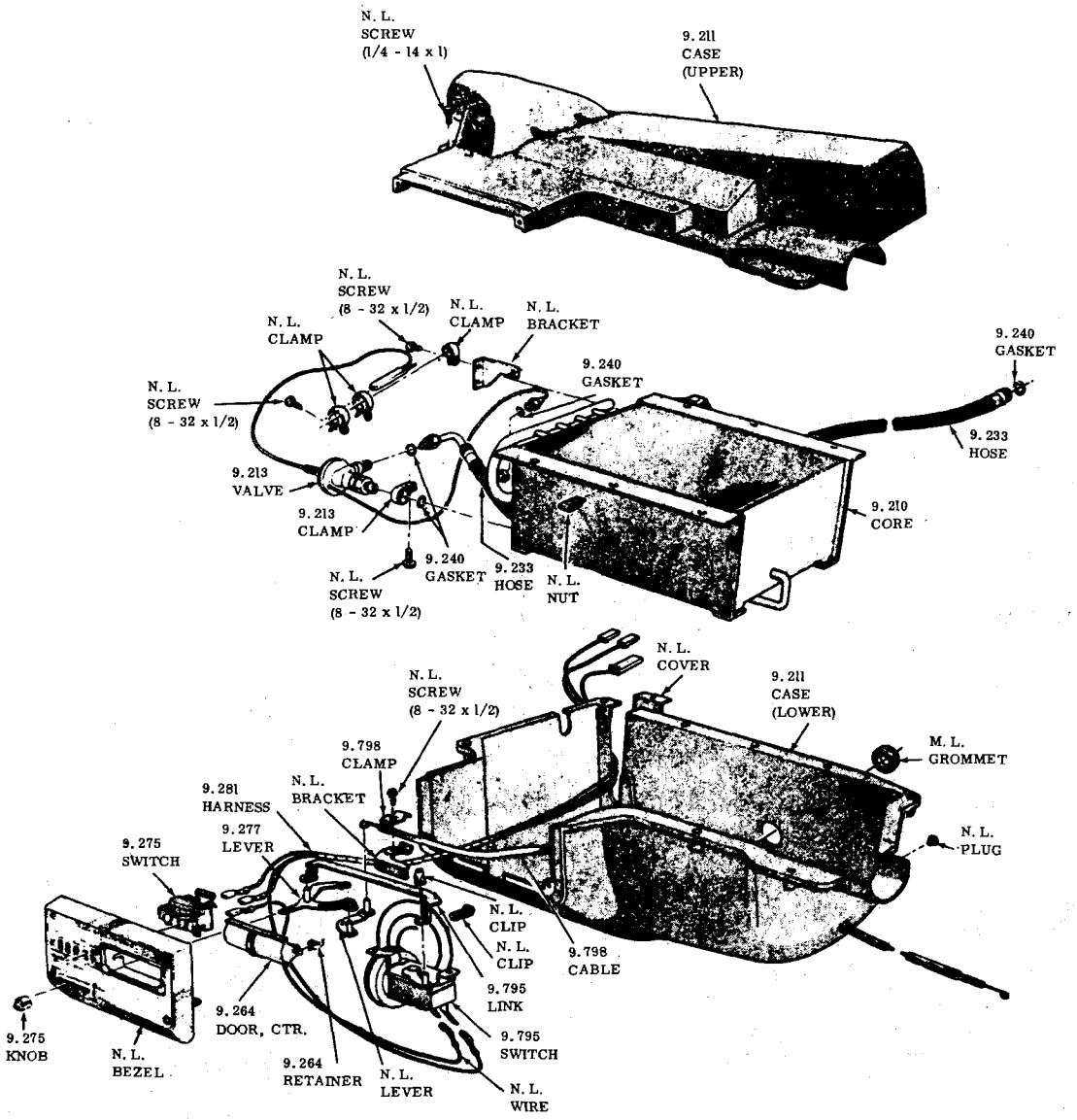

AIR CONDITIONING EVAPORATOR
1961–4000–4100–4300 2nd TYPE - 1962

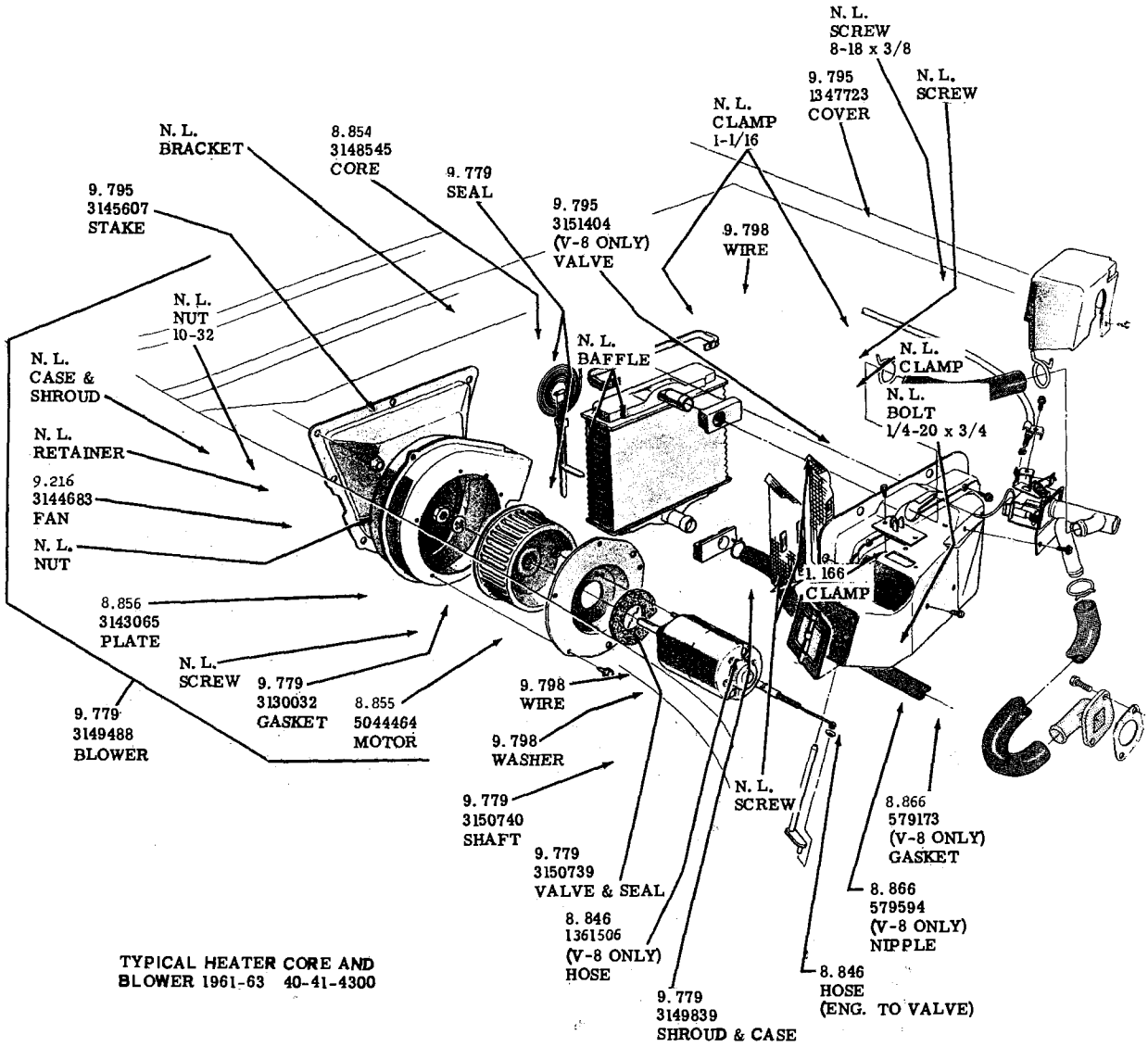

TYPICAL HEATER CORE AND BLOWER 1961-63 40-41-4300

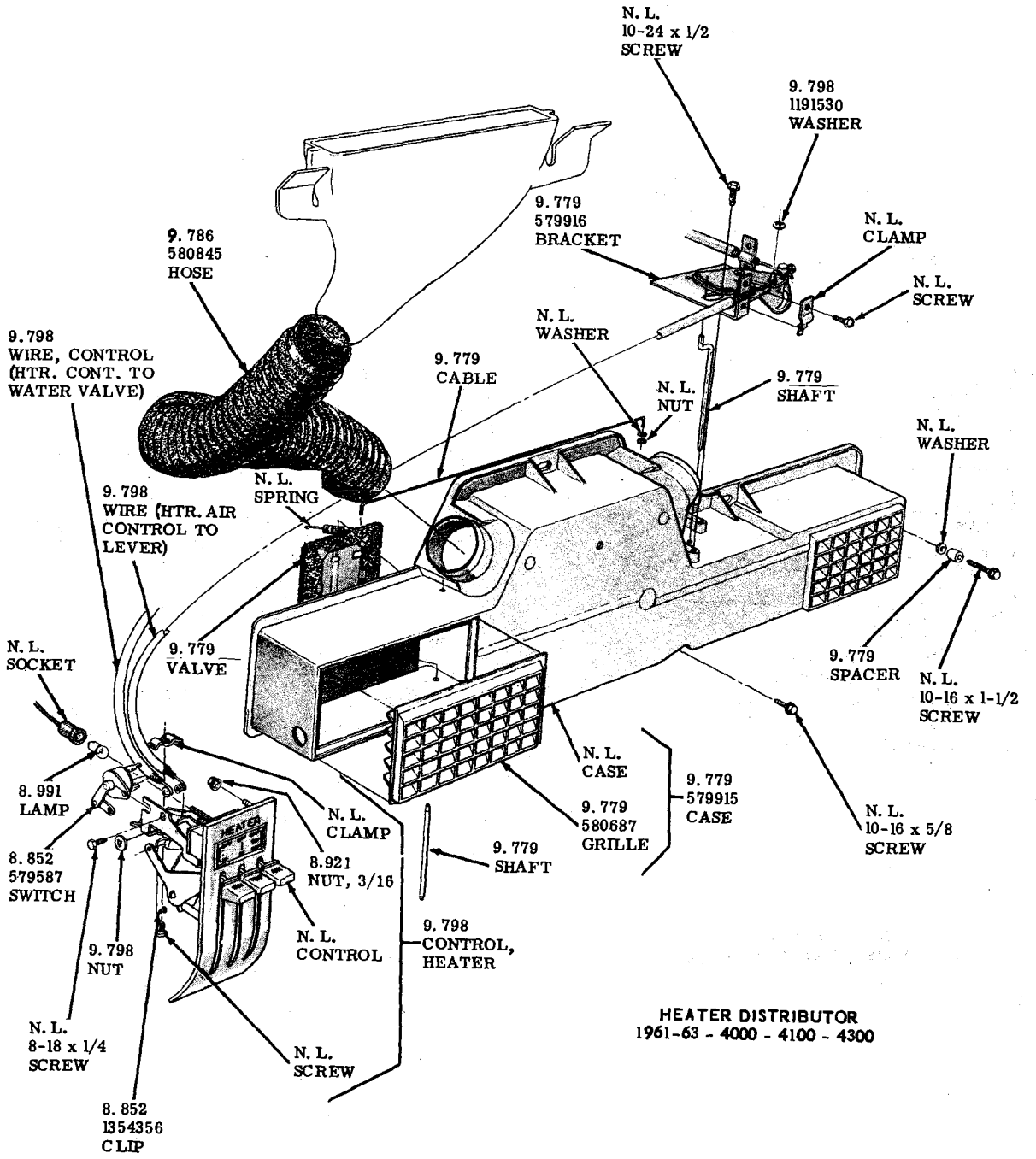

HEATER DISTRIBUTOR
1961-63 - 4000 - 4100 - 4300

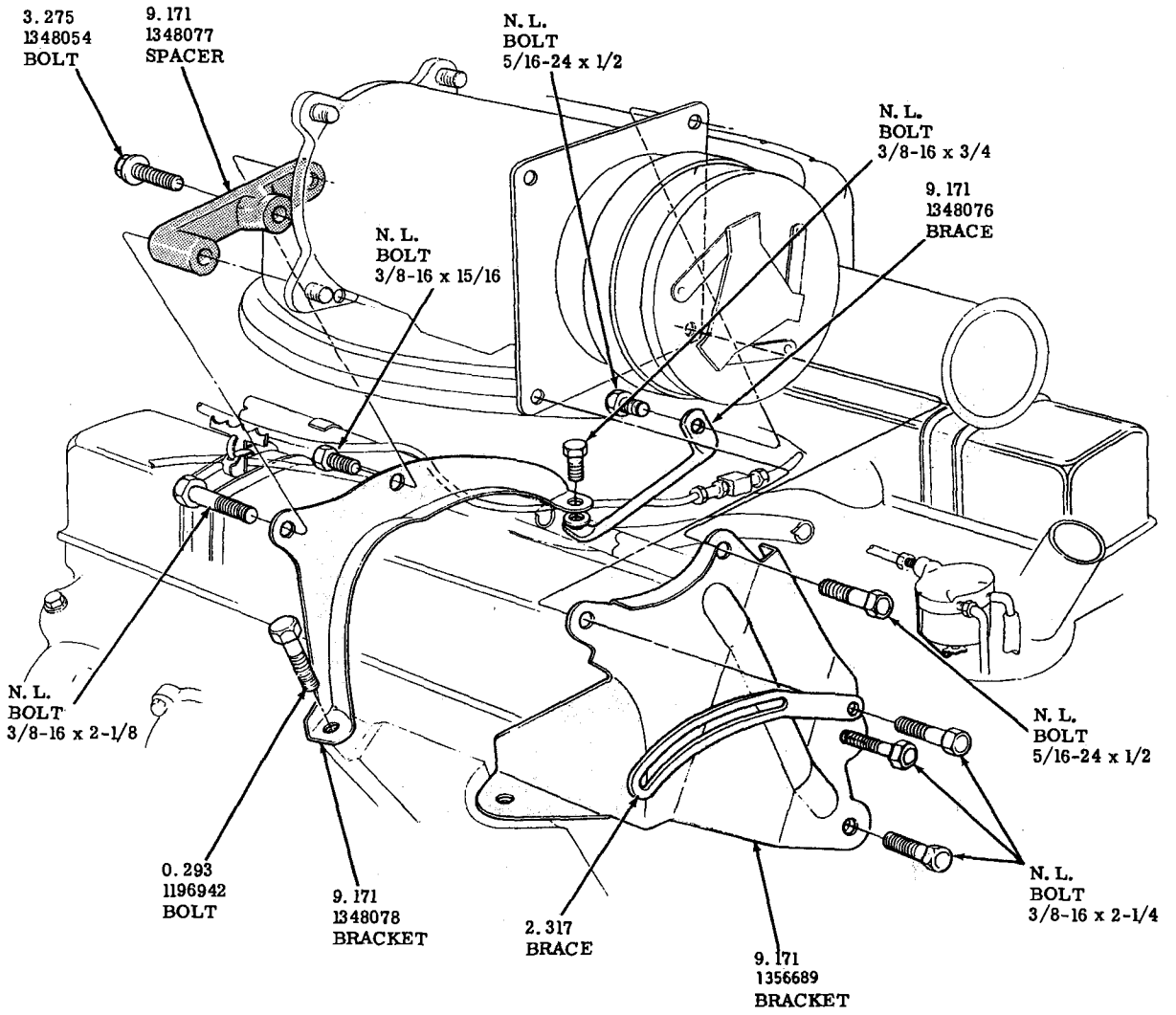

COMPRESSOR ATTACHING PARTS
1962 - 44 - 46 - 4800

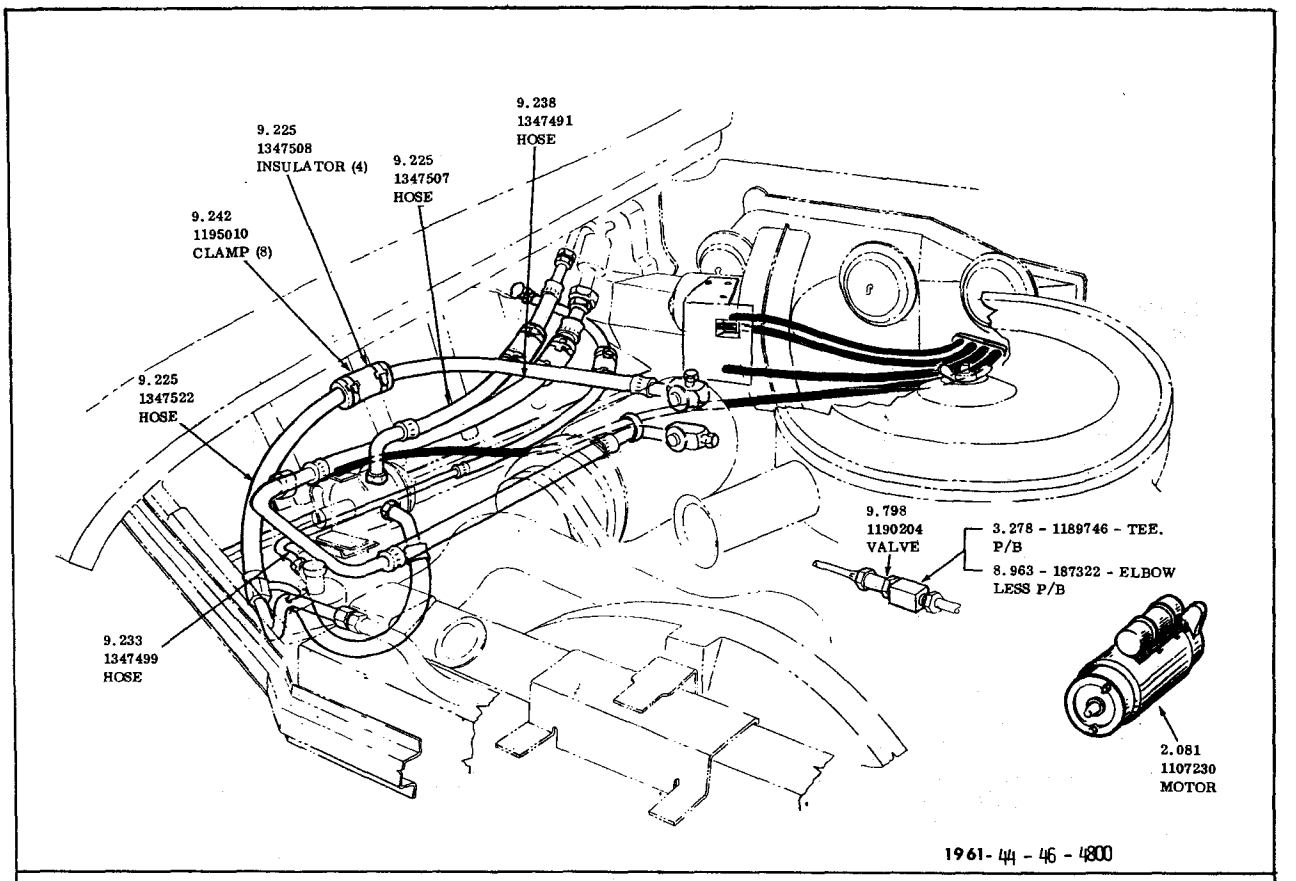

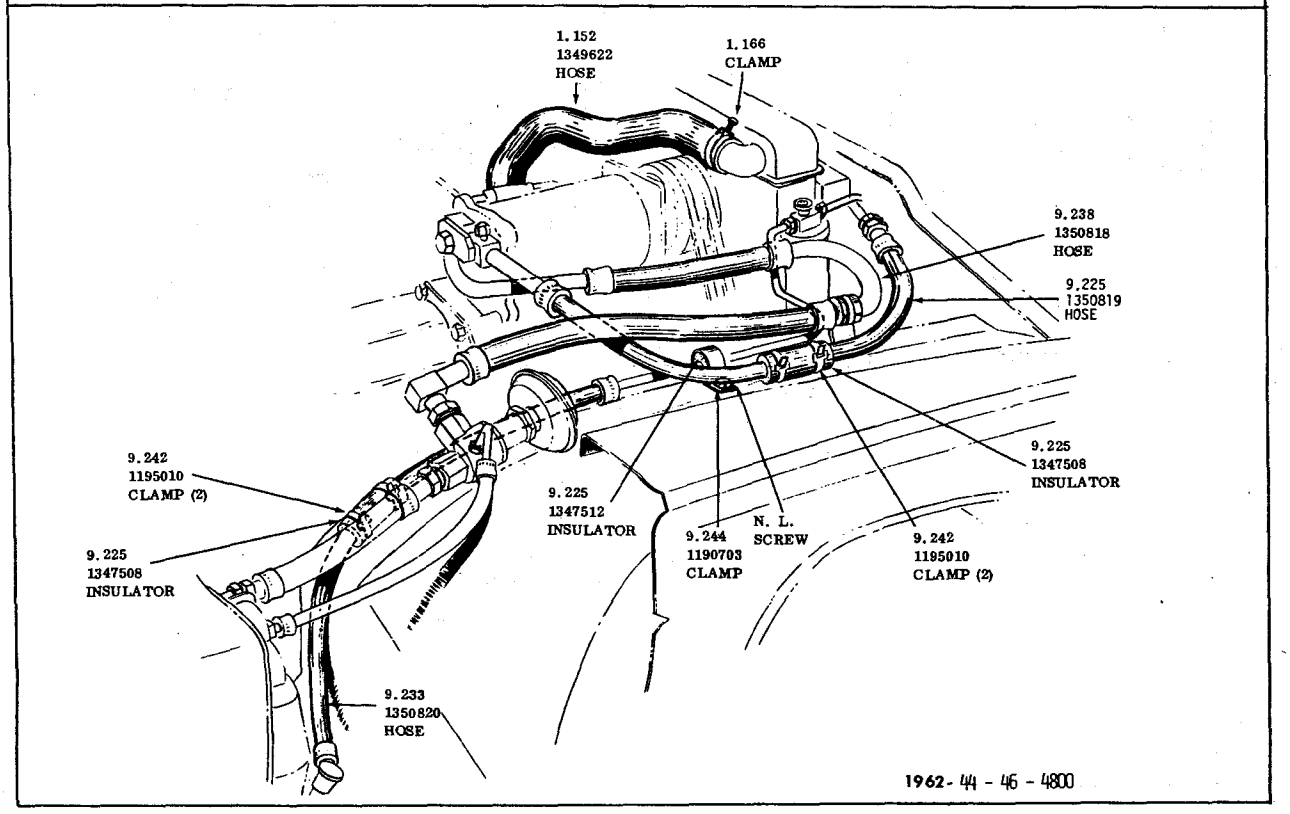

AIR CONDITION HOSE
1961-1962- 44 - 46 - 4800

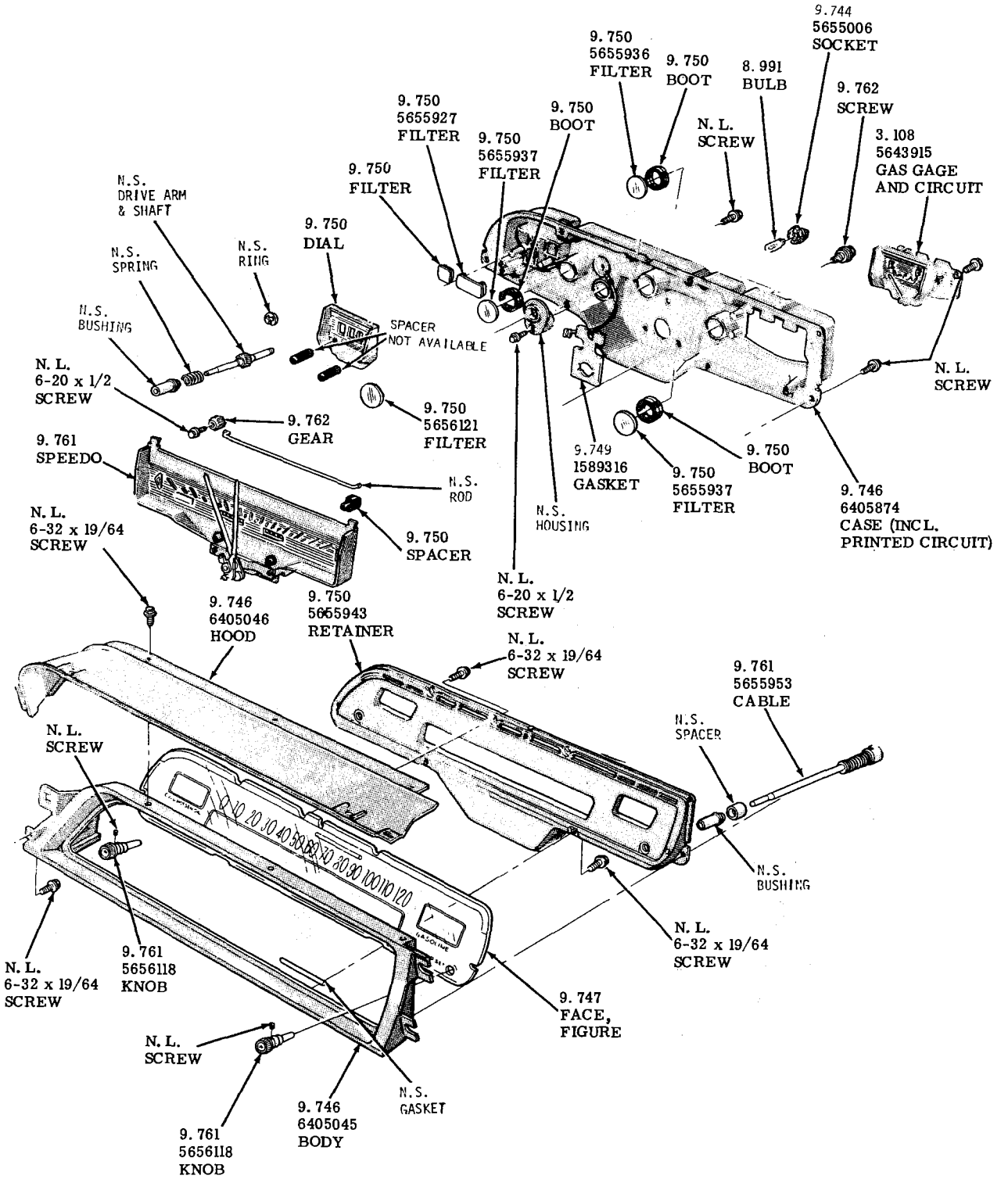

INSTRUMENT CLUSTER
1962 - 4400 - 4600 - 4800

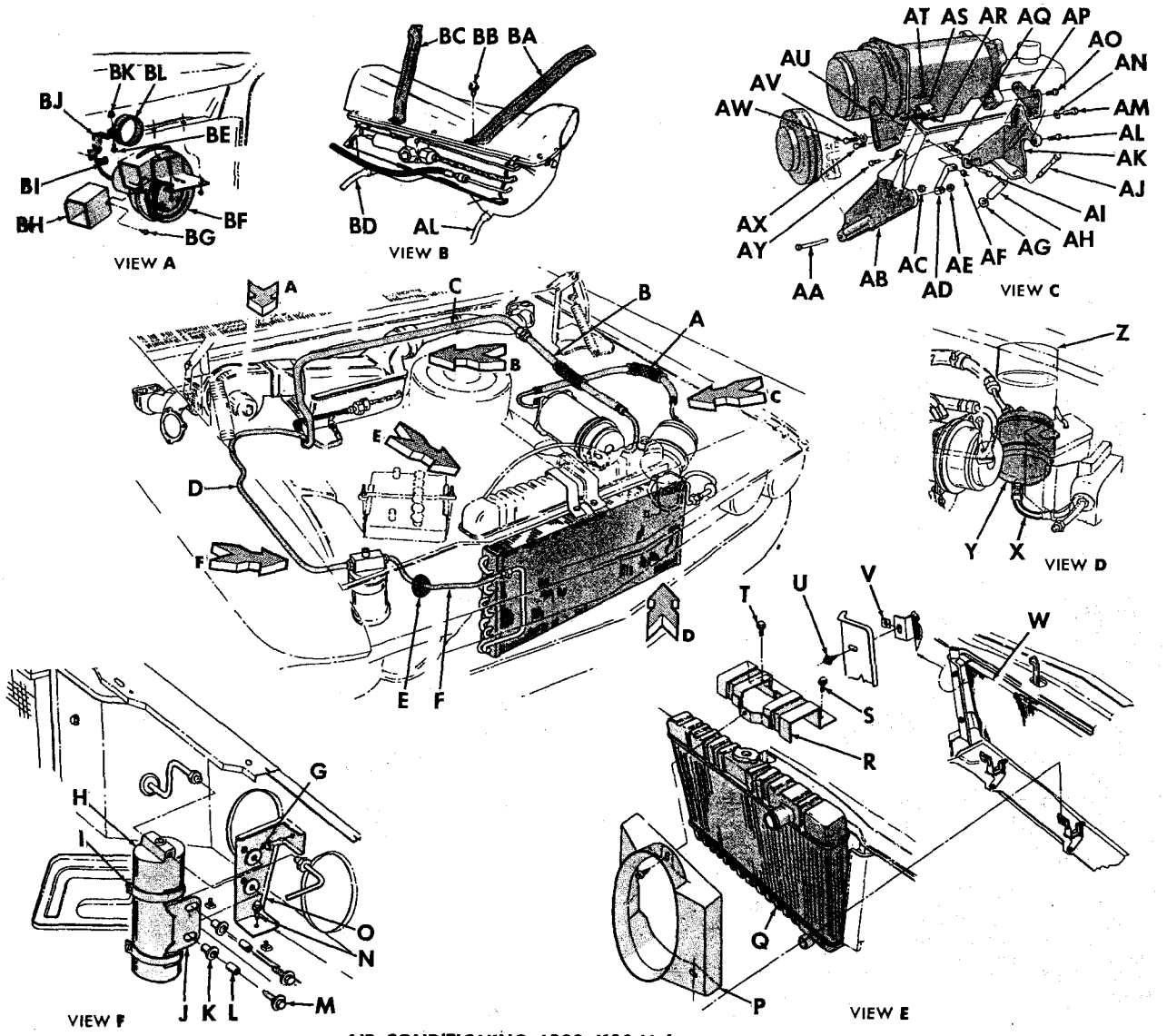

AIR CONDITIONING-4000-4100 V 6

AIR CONDITIONER 1963—4000-4100—V-6

A	HOSE, Compr. Discharge	9.225
B	HOSE, Compr. Suction	9.238
C	PIPE, Valve to Evaporator Suction	9.238
D	PIPE, Receiver to Evaporator	9.238
E	GROMMET, Pipe to Baffle	N.L.
F	PIPE, Receiver to Condenser	9.227
G	SHIM, Brkt. to Support	9.195
H	RECEIVER & DEHYDRATOR	9.195
I	CLAMP, Dehydrator to Brkt	9.195
J	BRACKET, Dehydrator	9.195
K	INSULATOR, Brkt. to Support	9.195
L	SPACER, Dehydrator to Support	9.195
M	SCREW, Hex. Flat Washer 1/4 - 14 x 1"	N.L.
N	SCREW, Hex. Washer Hd. 1/4 - 14 x 5/8"	N.L.
O	SUPPORT, Dehydrator Brkt.	9.195
P	SHROUD	1.277
Q	RADIATOR	1.219
R	BRACKET, Support - Upper	1.270
S	BOLT, Radiator Mounting	N.L.
T	BOLT, Radiator Mounting	N.L.
U	SCREW, Hex.Washer Ring Hd. 1/4 - 14 x 41/64"	N.L.
V	NUT, Anchor J 1/4 - 14	N.L.
W	CONDENSER	9.190
X	PIPE, Condenser to Muffler	9.226
Y	MUFFLER	9.225
Z	BRACKET, Muffler	9.225
AA	BOLT, Hex. Hd. 5/16 - 24 x 1/2"	N.L.
AB	BRACKET, Mtg. - Front	9.171
AC	NUT, Hex. 3/8 - 16	N.L.
AD	BRACE, Front Mtg. Brkt. to Exhaust Mainfold	9.171
AE	NUT, Hex. 3/8 - 16	N.L.
AF	NUT, Hex. 3/8 - 16	N.L.
AG	WASHER, Flat 7/8 x 15/32"	N.L.
AH	SPACER, Rear Mtg.Brkt. to Cyl. Head	9.171
AI	BOLT, Hex. Hd. 3/8-16 x 3/4"	N.L.
AJ	BOLT, Hex. Hd. 7/16-14 x 5 5/64"	N.L.
AK	BRACKET, MTG., Rear	9.171
AL	BOLT, Hex. Hd. 3/8-16 x 7/8"	N.L.
AM	BOLT, Hex. Hd. 3/8-16 x 7/8"	N.L.
AN	WASHER, 3/8-16	N.L.
AO	BOLT, Hex. Hd. 3/8-16 x 7/8"	N.L.
AP	ADAPTER, Rear	9.171
AQ	BOLT, Manifold 3/8 - 16 x 1 1/4"	N.L.
AR	BOLT, Hex. Hd. 5/16 - 24 x 1/2"	N.L.
AS	BRACKET, Hoses	9.242
AT	BOLT, Hex.Hd. 5/16 - 24 x 1/2"	N.L.
AU	ADAPTER, Front	9.171
AV	WASHER, 3/8 - 16	N.L.
AW	BOLT, Hex. Hd. 3/8 - 16 x 7/8"	N.L.
AX	BOLT, Hex. Hd. 3/8 - 16 x 7/8"	N.L.
AY	BOLT, Hex. Hd. 3/8 - 16 x 3/4"	N.L.
AZ	HOSE, Evaporator Drain - L.H.	9.220
BA	BRACKET, Evaporator Mtg. - Rear L.H.	9.211
BB	SCREW, Hex. Washer Hd. 1/4 - 14 x 1"	N.L.
BC	BRACKET, Evaporator Mtg. - Rear R.H.	9.211
BD	HOSE, Evaporator Drain - R.H.	9.220
BE	SCREW, Hex. Hd. 10-24 x 5/8"	N.L.
BF	BLOWER & AIR INLET	9.779
BG	SCREW, Hex. Washer Hd. Top 8 - 15 x 1/2"	N.L.
BH	DUCT, Evaporator to Blower	9.211
BI	SCREW, Hex. Hd. 10 - 24 x 5/8"	N.L.
BJ	SUPPORT, Blower Motor to Toe Pan	9.779
BK	NUT, Hex. Flange 10 - 24	N.L.
BL	CLAMP, Blower Motor	9.779

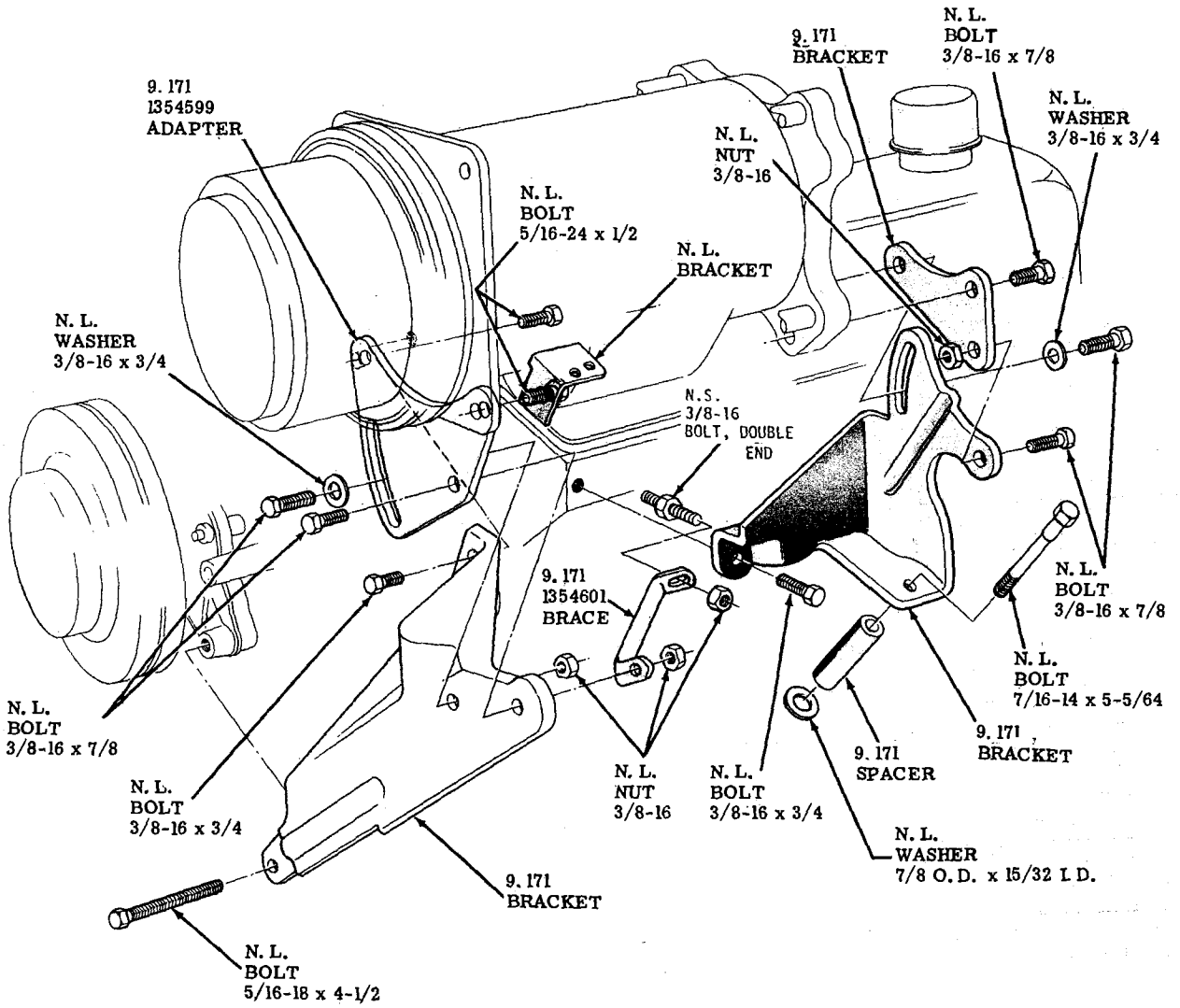

COMPRESSOR ATTACHING PARTS 1962 - 4000 V-6 2ND TYPE

MEMORANDA

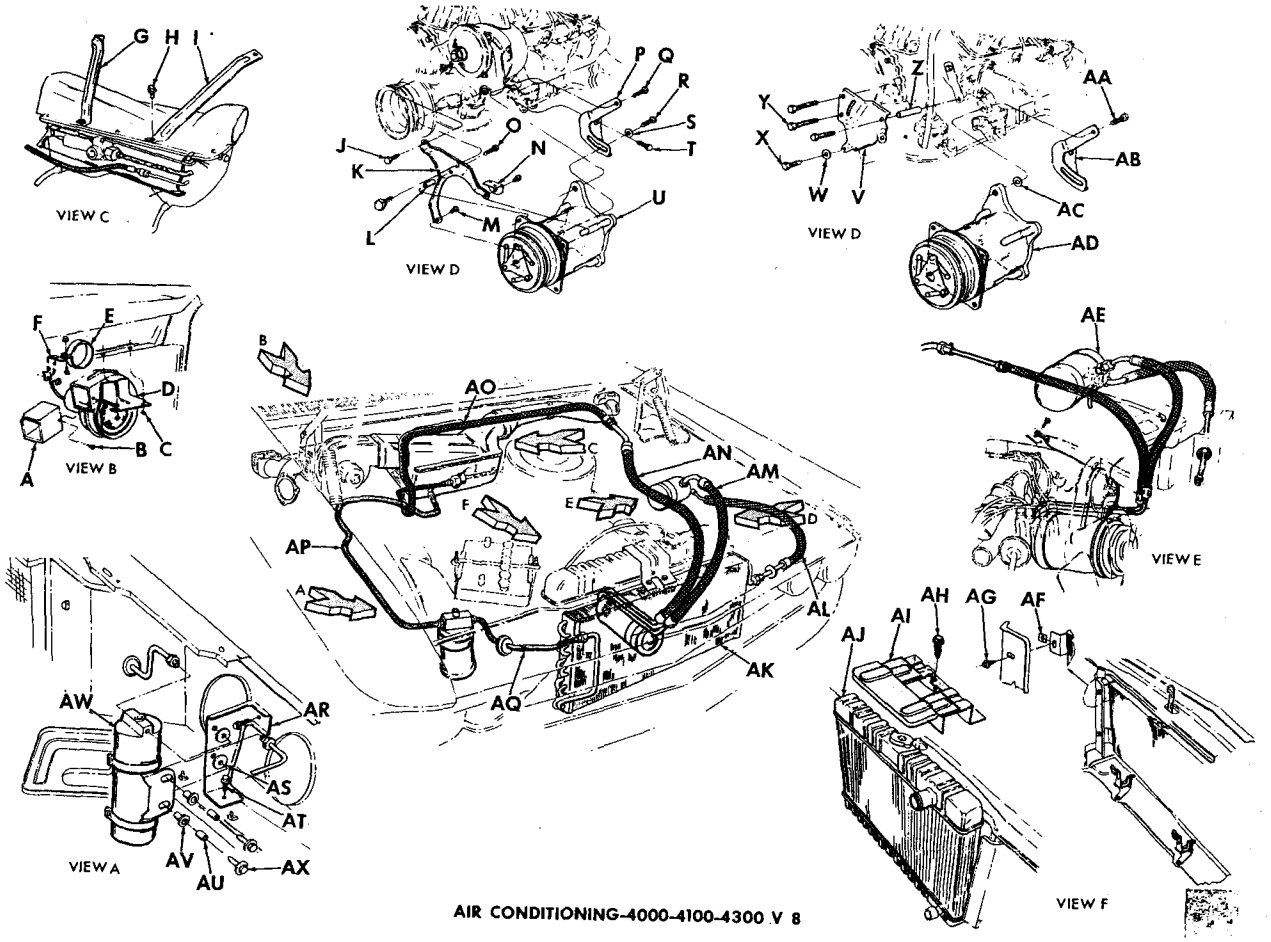

AIR CONDITIONING-4000-4100-4300 V 8

AIR CONDITIONING
1963—4000-4100-4300-V8

A	DUCT	9.211
B	SCREW, #10-24 x 5/8"	N.L.
C	SCREW, #10-24 x 5/8"	N.L.
D	BLOWER	9.779
E	CLAMP	9.779
F	SUPPORT	9.779
G	BRACKET	9.211
H	SCREW, 1/4-14 x 1"	N.L.
I	BRACKET	9.211
J	BOLT, 3/8-16 x 7/8	N.L.
K	SPACER	9.171
L	ADAPTER, Front	9.171
M	BOLT, 5/16-24 x 1/2"	N.L.
N	BRACKET, Hose	N.L.
O	BOLT, 5/16-24 x 1 5/8	N.L.
P	BRACE, Rear	9.171
Q	BOLT, 3/8-16 x 1 3/4	N.L.
R	BOLT, 3/8-16 x 1	N.L.
S	BOLT, 7/16-14 x 1 1/4	N.L.
T	WASHER, 13/16 x 13/32	N.L.
U	COMPRESSOR (complete)	N.L.
V	WASHER, 3/16 x 13/32	N.L.
W	BOLT, 3/8-16 x 3 3/4	N.L.
X	BOLT, 3/8-16 x 1	N.L.
Y	BOLT, 5/16-18 x 4 5/8	N.L.
Z	SPACE	9.171
AA	BOLT, 3/8-16 x 1 1/8	N.L.
AB	BRACE, Rear	9.171
AC	WASHER, 1 x 13/32	N.L.
AD	COMPRESSOR (complete)	N.L.
AE	MUFFLER	9.225
AF	CLIP J	N.L.
AG	SCREW, 1/4-14 x 41/64	N.L.
AH	SCREW, Radiator	N.L.
AI	SHIELD, Fan (reference	N.L.
AJ	RADIATOR (A. C. only)	1.219
AK	CONDENSER	9.190
AL	HOSE, Condenser to Muffler	9.226
AM	HOSE, Discharge	9.225
AN	HOSE, Compressor Suction	9.238
AO	PIPE, Evaporator, Suction	9.238
AP	PIPE, Receiver to Evaporotor	9.238
AQ	PIPE, Receiver to Condenser	9.227
AR	BRACKET, Dehydrator	9.195
AS	SHIM	N.L.
AT	SCREW, 1/4-14 x 1"	N.L.
AU	SPACER	9.195
AV	INSULATOR	9.195
AW	RECEIVER AND DEHYDRATOR	9.195
AX	SCREW, 1/4-14 x 5/8	N.L.

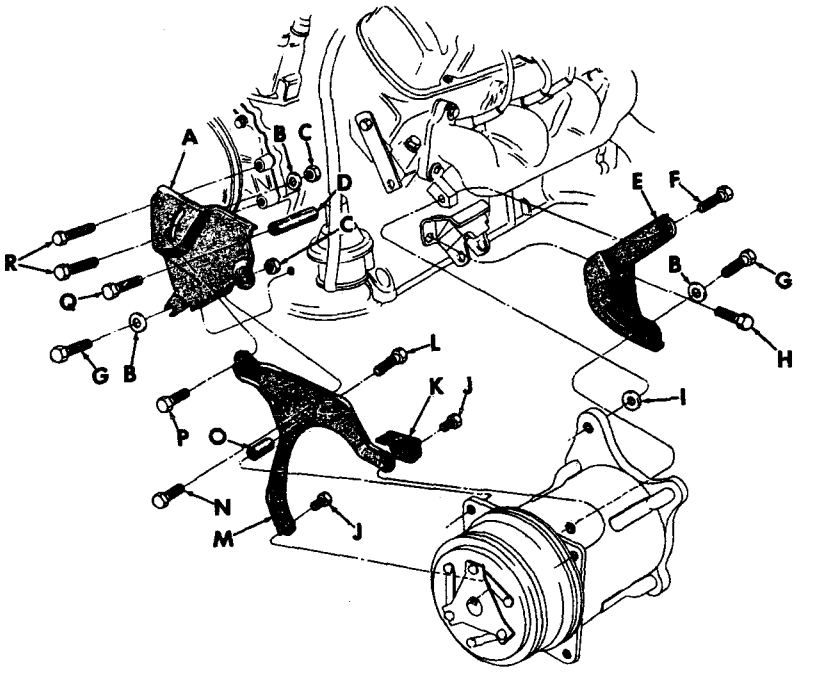

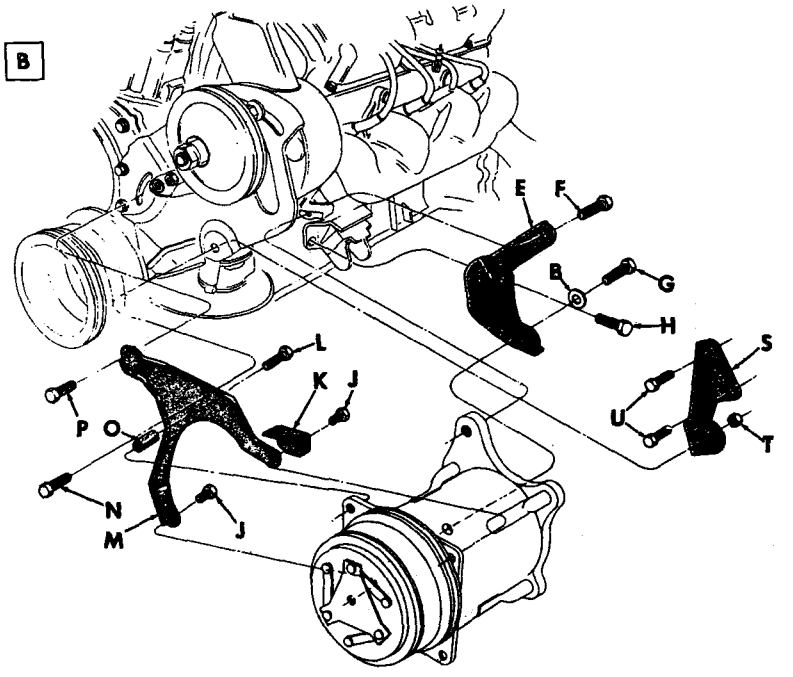

COMPRESSOR ATTACHING PARTS—1962—4000-4100-4300-V-8 LESS POWER STEERING

COMPRESSOR ATTACHING PARTS—1962-4000-4100-4300 V-8 WITH POWER STEERING

A	BRACKET, Mounting—Front	9.171
B	WASHER, Plain—13/32 x 13/16 x 1/16	N. L.
C	NUT, Hex.—3/8-16	N. L.
D	SPACER, Bracket to Cylinder Head	9.171
E	BRACE, Rear	9.171
F	BOLT, Hex. Hd.—3/8-16 x 1 3/4	N. L.
G	BOLT, Hex. Hd.—3/8-16 x 1	N. L.
H	BOLT, Hex. Hd.—7/16-14 x 1 1/4	N. L.
I	WASHER, Plain—.406 x 1.00	N. L.
J	BOLT, Hex. Hd.—5/16-24 x 1/2	N. L.
K	BRACKET, Hose	9.242
L	BOLT, Hex. Hd.—5/16-24 x 1 5/8	N. L.
M	ADAPTER—Front	9.171
N	BOLT, Hex. Hd.—3/8-16 x 1	N. L.
O	SPACER, Compressor to Adapter	9.171
P	BOLT, Hex.—3/8-16 x 7/8	N. L.
Q	BOLT, Hex. Hd.—3/8-16 x 3 3/4	N. L.
R	BOLT, Hex. Hd.—5/16-18 x 4 5/8	N. L.
S	BRACE, Vertical	9.171
T	NUT, Hex.—3/8-16	N. L.
U	BOLT, Hex. Hd.—3/8-16 x 1 1/8	N. L.

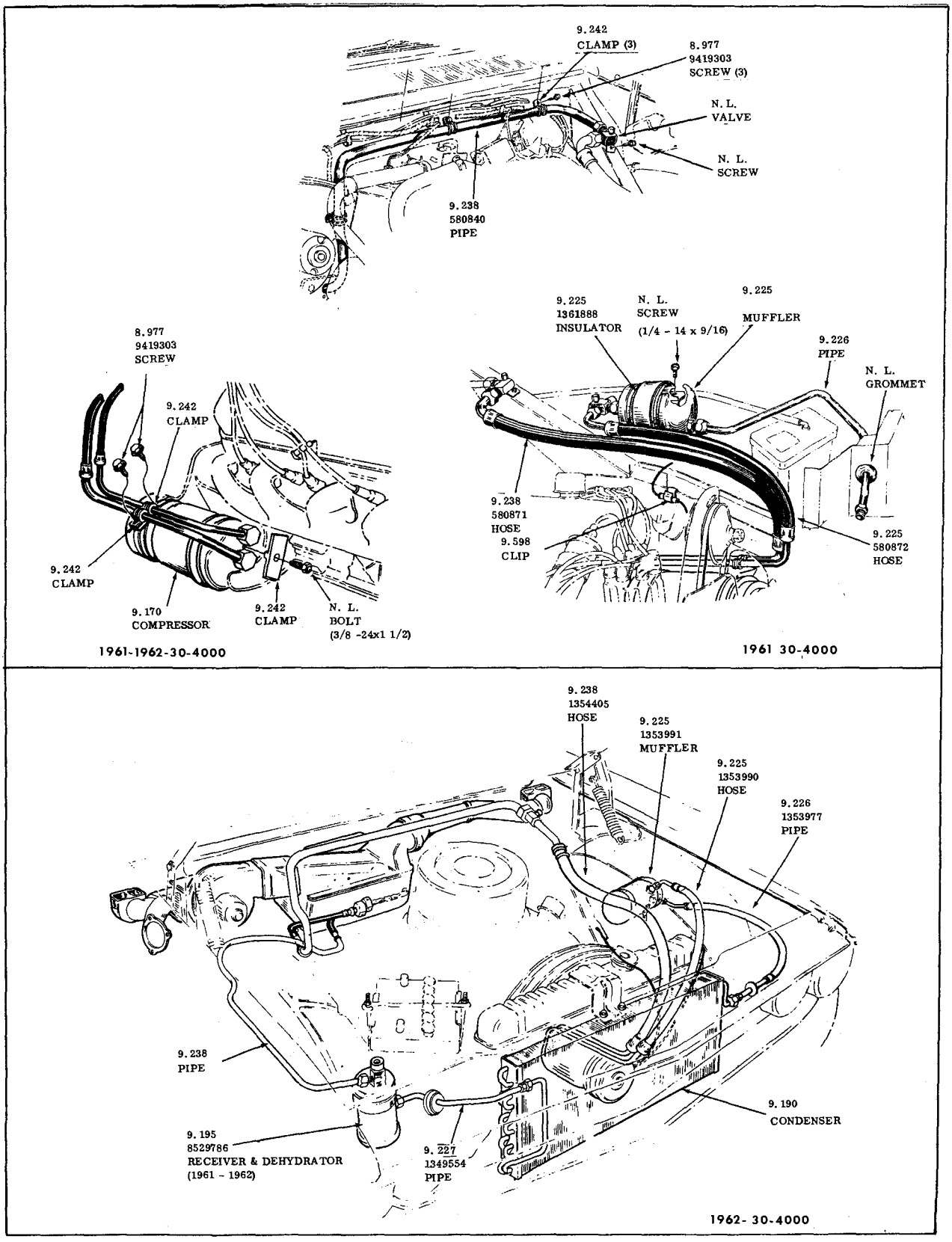

AIR CONDITION HOSE
1961-1962-30-4000

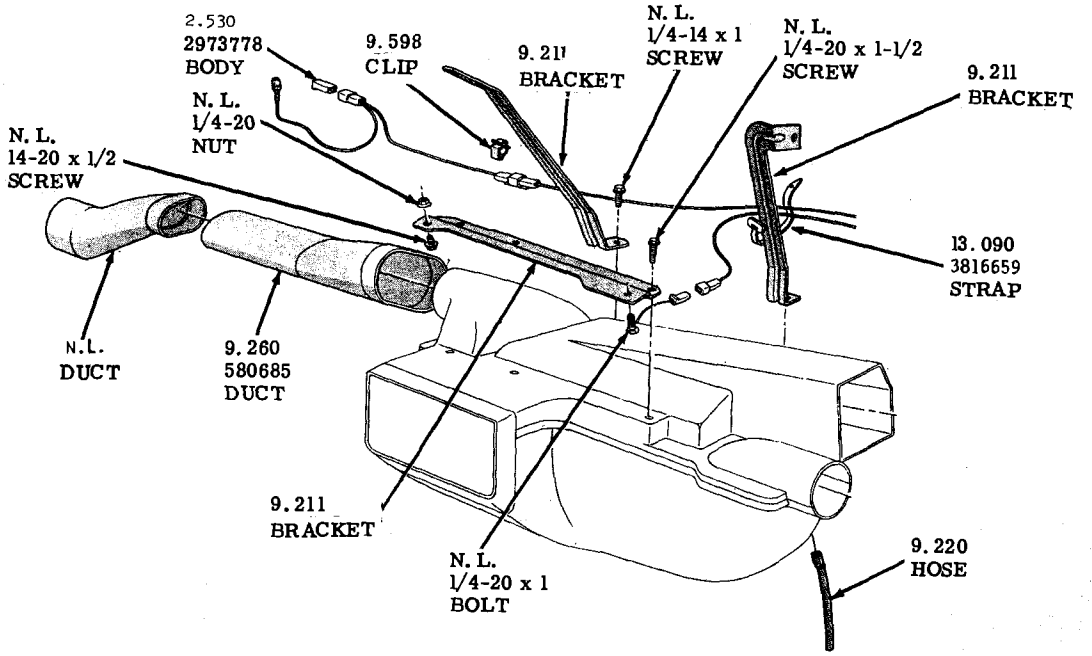

AIR CONDITIONING BLOWER
DUCTS & ATTACHING PARTS
1961 - 1962 - 4000 - 4100 - 4300

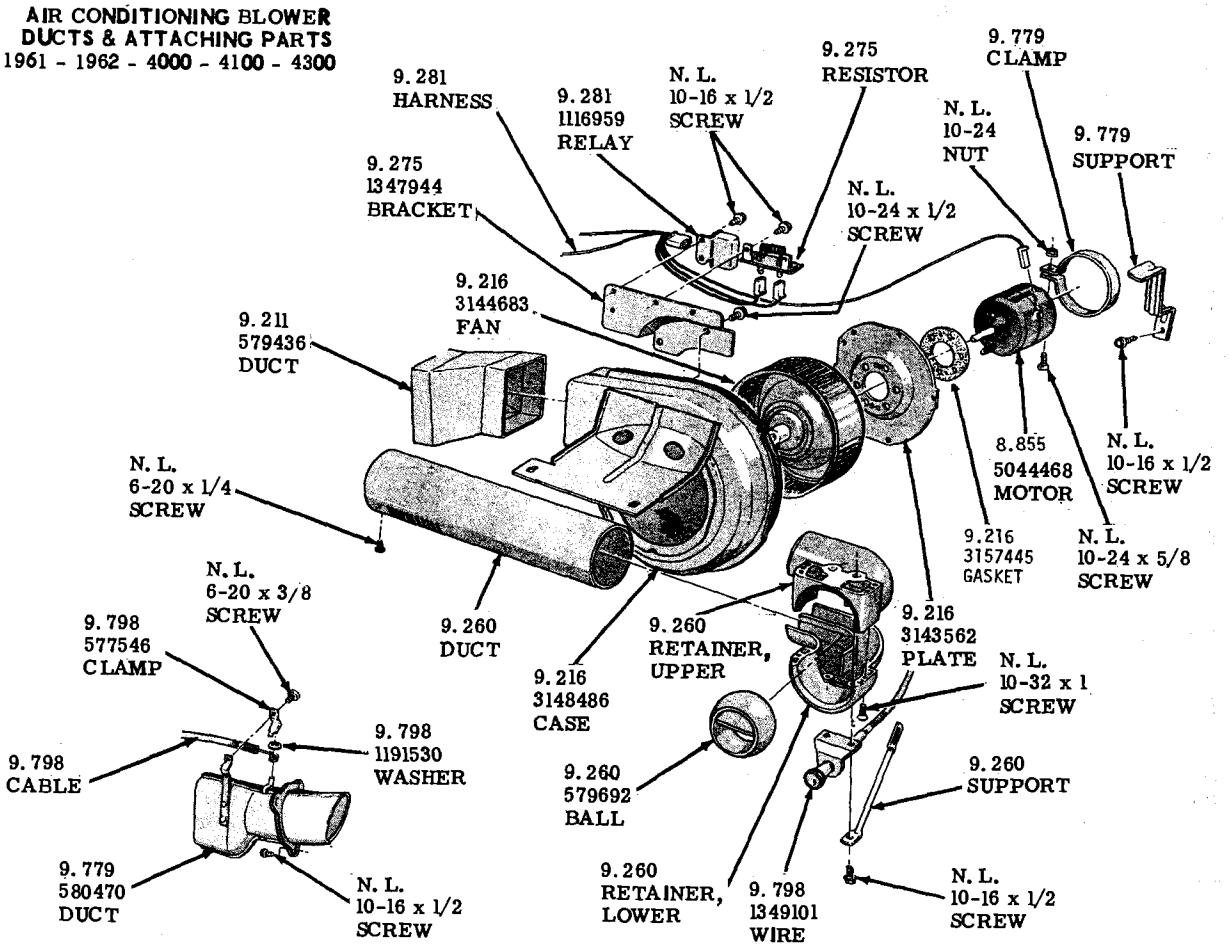

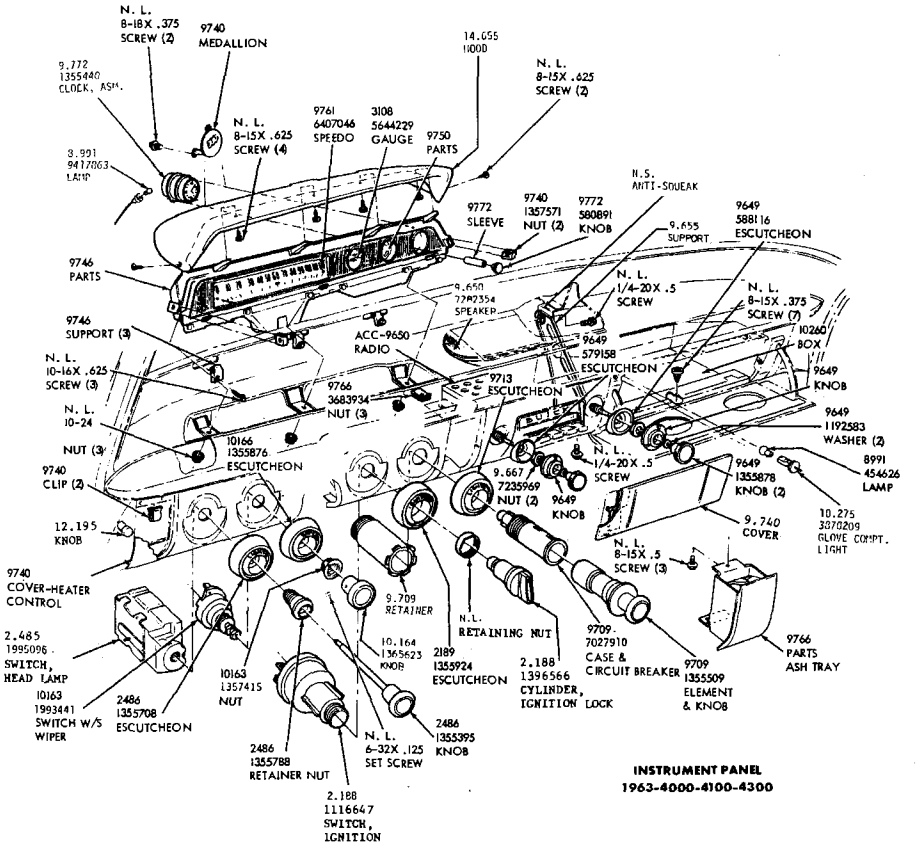

INSTRUMENT PANEL
1963-4000-4100-4300

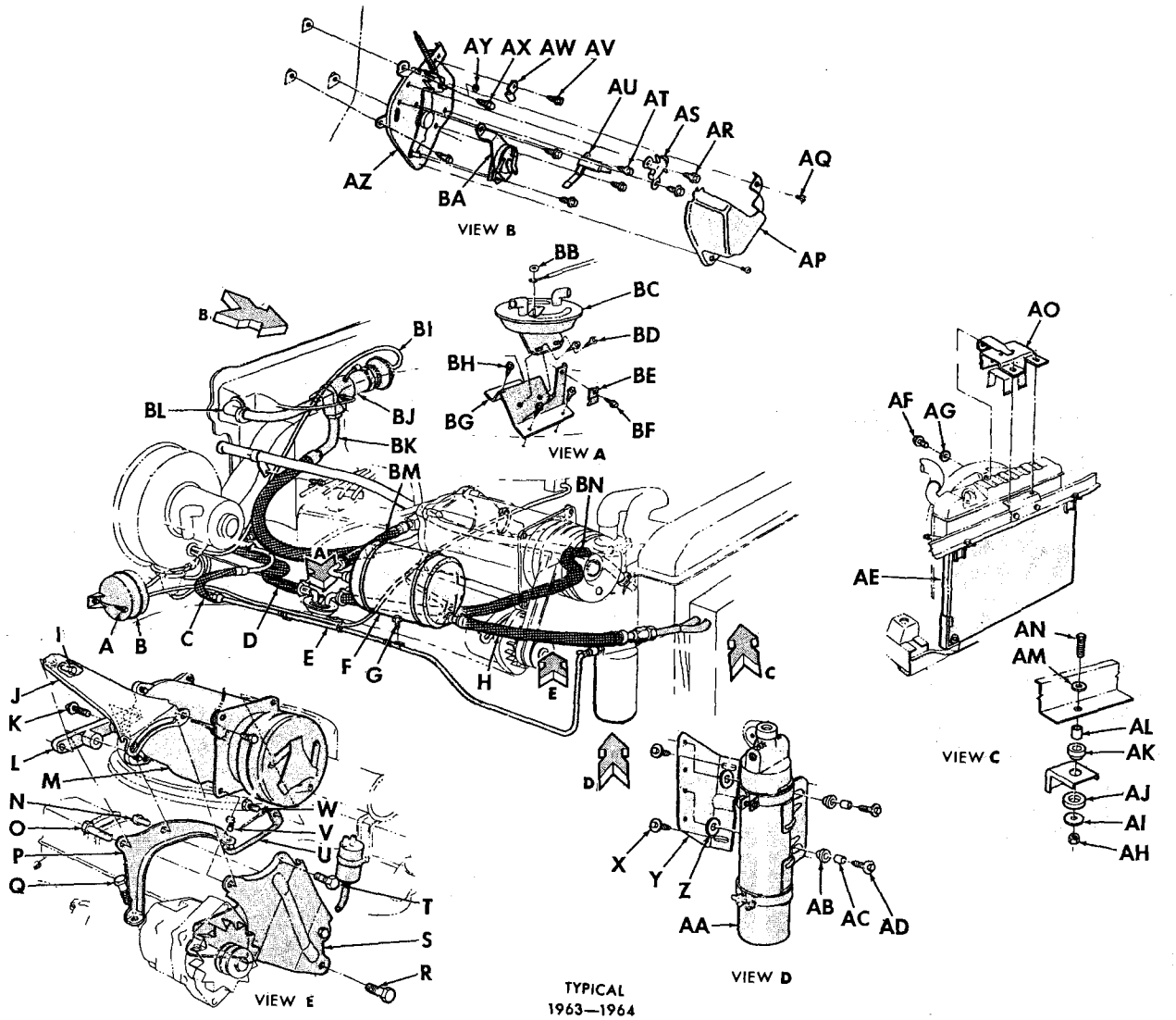

TYPICAL
1963—1964
AIR CONDITIONING-4400-4600-4800

TYPICAL 1963 — 1964—4400-4600-4800 AIR CONDITIONING

A	SCREW, Hex Washer Hd Tap 1/4-14 x 1/2"	N.L.
B	TANK, Vacuum	9.798
C	HOSE, Liquid	9.233
D	HOSE, Heater Water Inlet	8.846
E	CLAMP, Vacuum to Liquid Line	9.798
F	MUFFLER	9.225
G	SCREW, Hex Washer Hd Tap 10-16 x 5/8"	N.L.
H	HOSE, Muffler to Condenser	9.225
I	BOLT, Hex 3/4-16 x 15/16"	N.L.
J	BRACE, Delcotron & Compressor Mtg.	2.317
K	BOLT, Spacer to Compressor	3.275
L	SPACER, Rear Brkt.	9.171
M	COMPRESSOR, Complete	N.L.
N	BOLT, Hex 3/8-16 x 15/16"	N.L.
O	BOLT, Hex 3/8-16 x 2 1/8"	N.L.
P	BRACKET, Rear	9.171
Q	BOLT, Rear Bracket to Cylinder Hd.	0.293
R	BOLT, Hex 3/8-16 x 2 1/4	N.L.
S	BRACKET, Front	9.171
T	BOLT, Hex 5/16-24 x 1/2	N.L.
U	BRACE, Compressor	9.171
V	BOLT, Hex 3/8-16 x 3/4	N.L.
W	BOLT, Hex 5/16-24 x 1/2	N.L.
X	SCREW, Hex Hd Tap 1/4-14 x 5/8	N.L.
Y	BRACKET, Mounting	9.195
Z	SHIM	9.195
AA	RECEIVER & DEHYDRATOR	9.195
AB	INSULATOR, Brkt. to Support	9.195
AC	SPACER, Dehydrator to Support	9.195
AD	SCREW, Washer Hd 1/4-14 x 1"	N.L.
AE	CONDENSER	9.190
AF	BOLT, Hex 1/4-20 x 2 3/8"	N.L.
AG	WASHER, Flat 11/32"	N.L.
AH	NUT, Hex 1/4-20	N.L.
AI	WASHER, Flat 17/64"	N.L.
AJ	SHIM	9.198
AK	INSULATOR	0.413
AL	SPACER	9.198
AM	WASHER, Flat 9/32"	N.L.
AN	BOLT, Hex. 1/4-20 x 1	N.L.
AO	BRACKET, Upper Mtg.	1.270
AP	COVER, Circuit Control	9.798
AQ	SCREW, Pan Hd Tap 6-20 x 1/4"	N.L.
AR	SCREW, Hex Hd 8-15 x 3/8"	N.L.
AS	SWITCH, Vacuum (To Control & Volve)	9.798
AT	SCREW, Hex Washer Hd 8-18 x 3/8	N.L.
AU	SWITCH, Master Control - Elec	9.798
AV	SCREW, Hex Washer Hd 8-15 x 1/2"	N.L.
AW	CLAMP, Control Cable	9.798
AX	SCREW, Hex Washer Lid Tapping 10-16 x 3/8	N.L.
AY	WASHER, Spring Grip	9.798
AZ	CONTROL, A.C. Circuit	9.798
BA	SWITCH, Blower	8.852
BB	WASHER, Spring Grip	9.798
BC	VALVE, Heater Temperature Control	9.795
BD	SCREW, Washer Hd Tapping 10-16 x 1/2	N.L.
BE	CLAMP, Cable to Circuit Control	9.798
BF	SCREW, Hex Washer Hd. Tap 8-15 x 1/2	N.L.
BG	SUPPORT, Man. Gate Valve to Skirt	9.798
BH	SCREW, Washer Hd Tapping 10-16 x 1/2	N.L.
BI	HOSE, Control & Vacuum Switch	9.798
BJ	VALVE, Throttling	9.198
BK	HOSE, Suction	9.238
BM	HOSE, Discharge	9.225
BN	HOSE, Water Pump Outlet	8.846

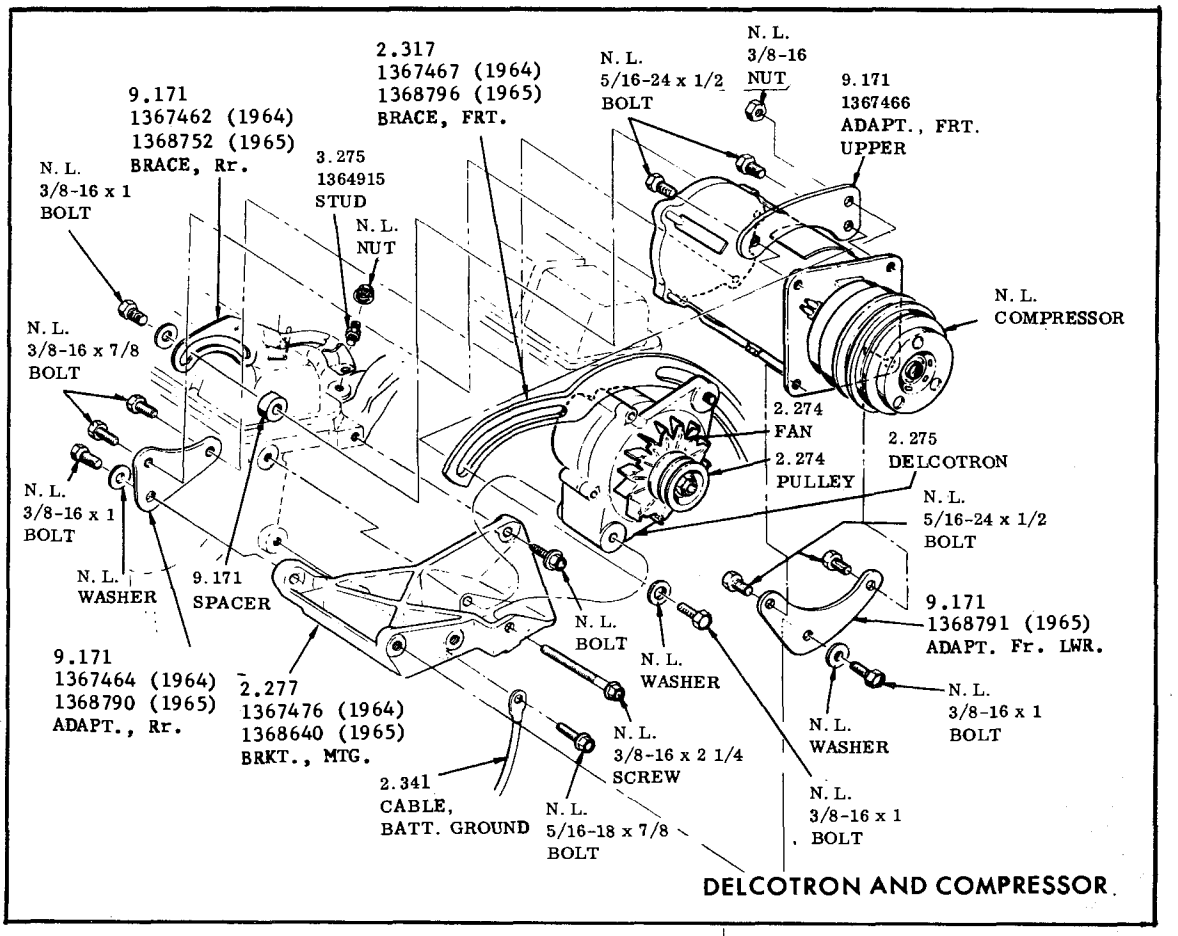

DELCOTRON AND COMPRESSOR

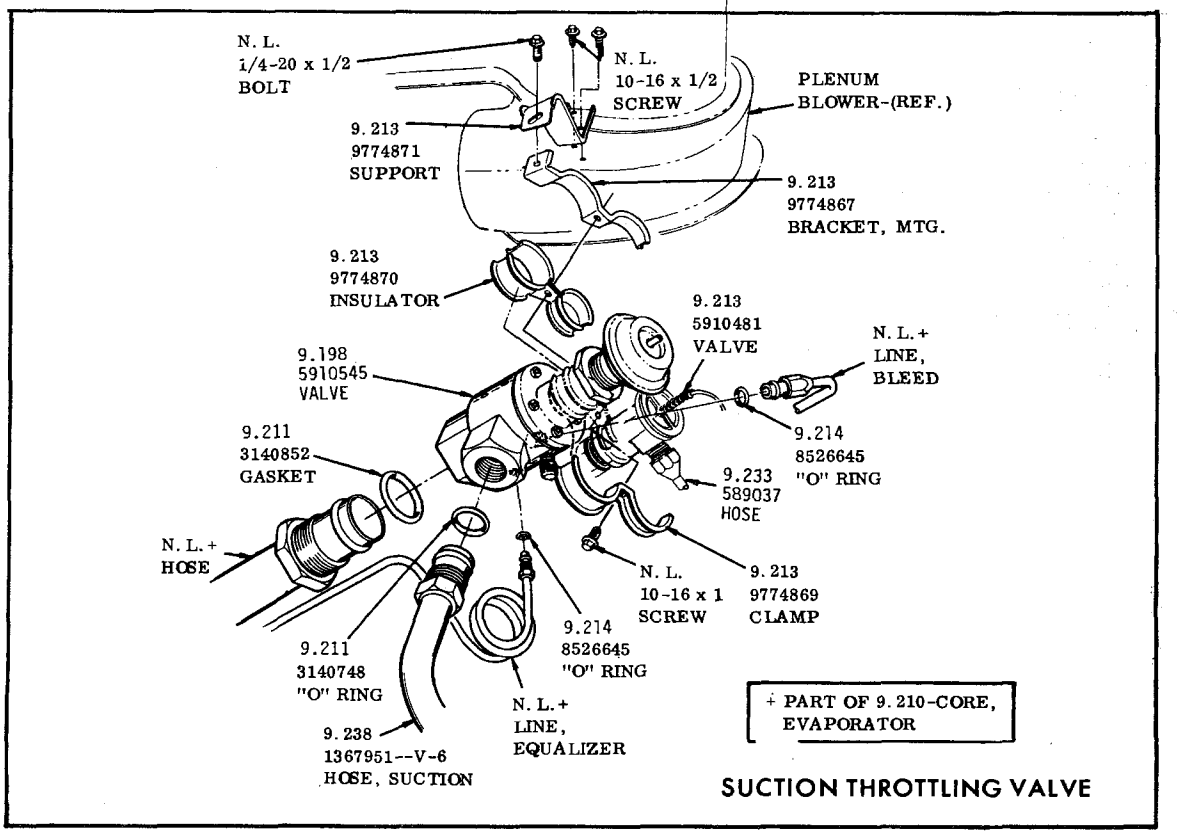

SUCTION THROTTLING VALVE

DELCOTRON AND SUCTION THROTTLING VALVE MOUNTING

1964-1965 SPECIAL - SKYLARK

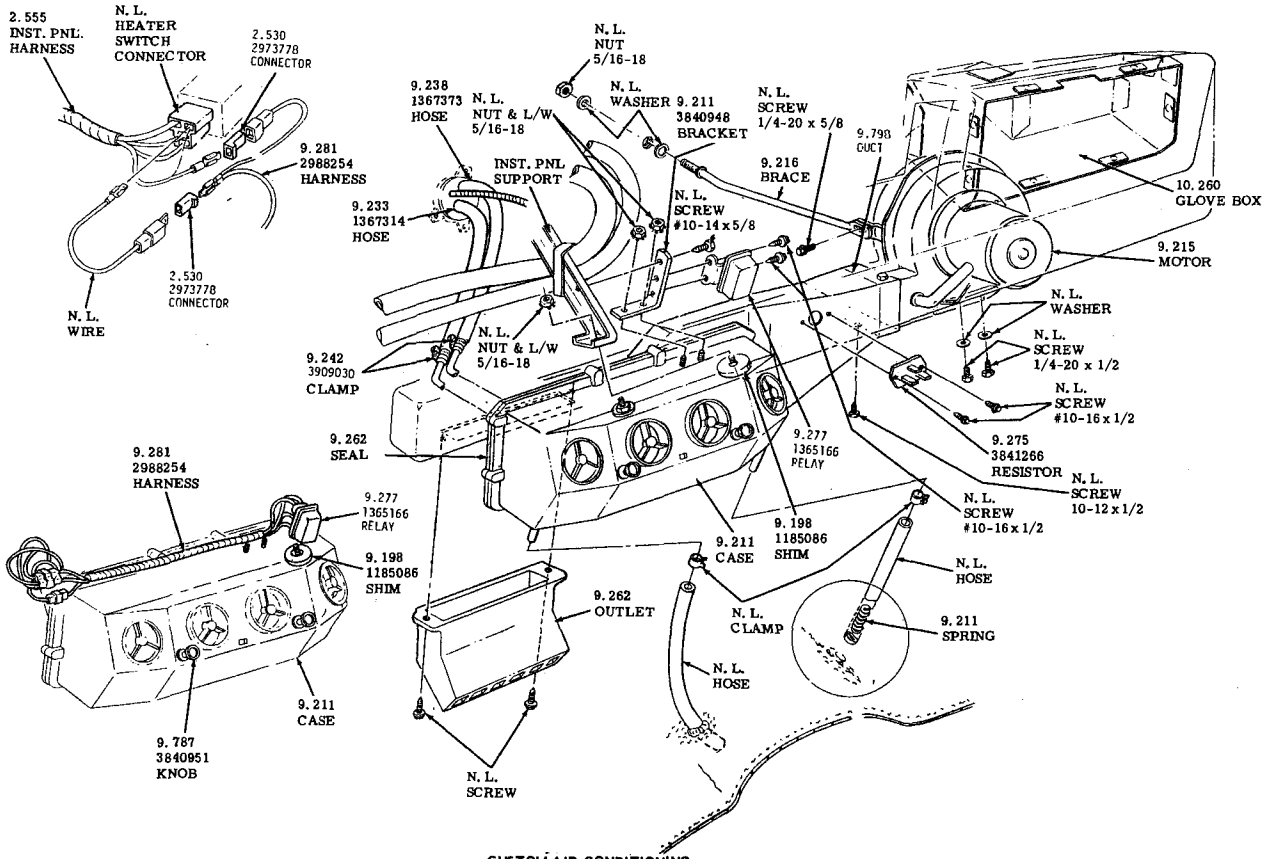

CUSTOM AIR CONDITIONING
1964-1965 SPECIAL & SKYLARK

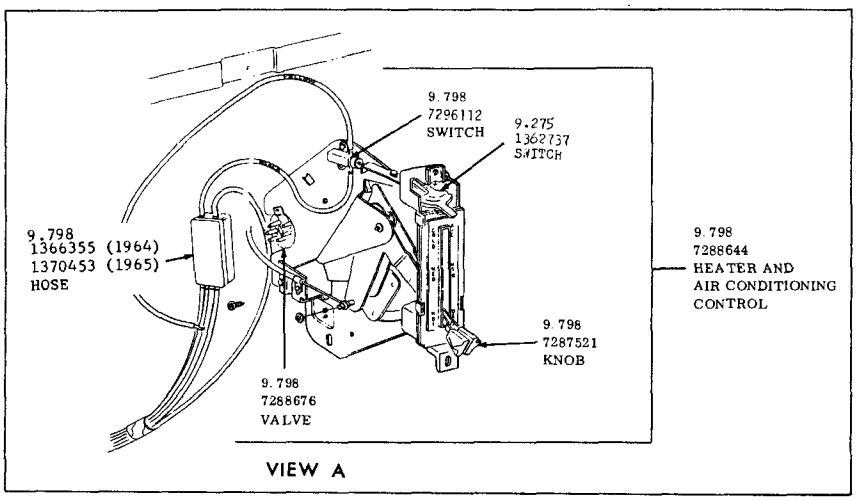

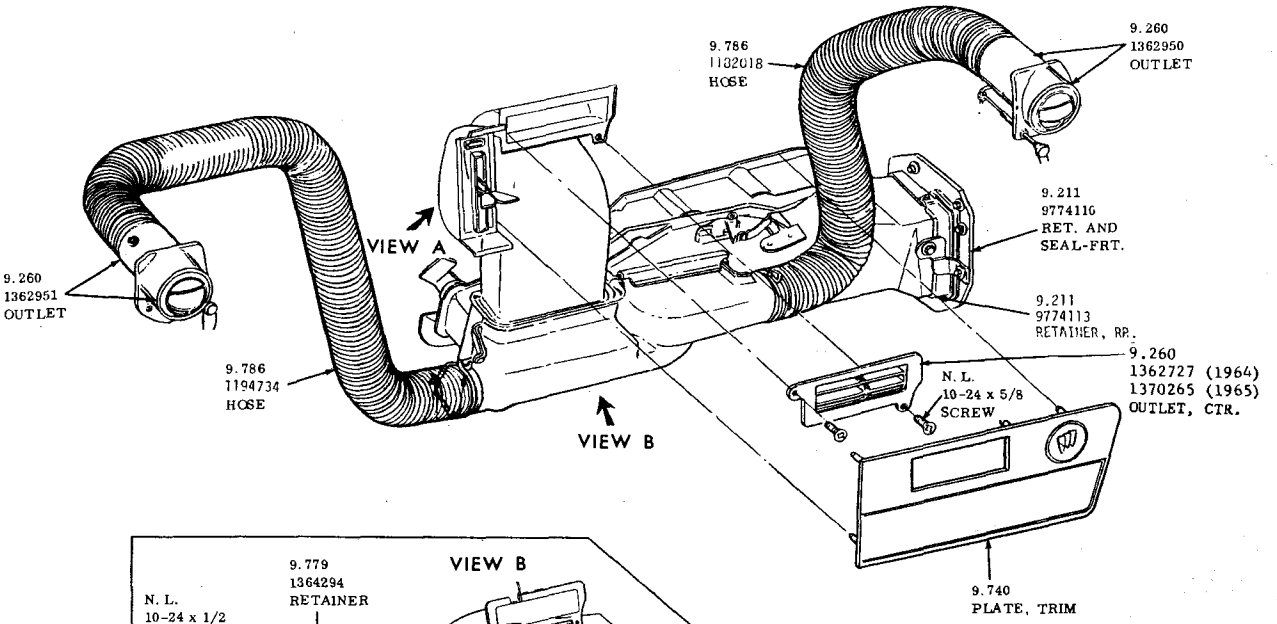

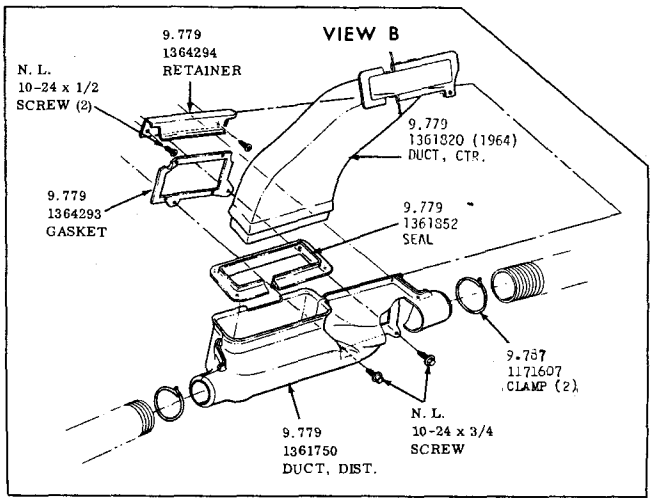

AIR CONDITIONING CONTROLS
1964-1965-SPECIAL-SKYLARK

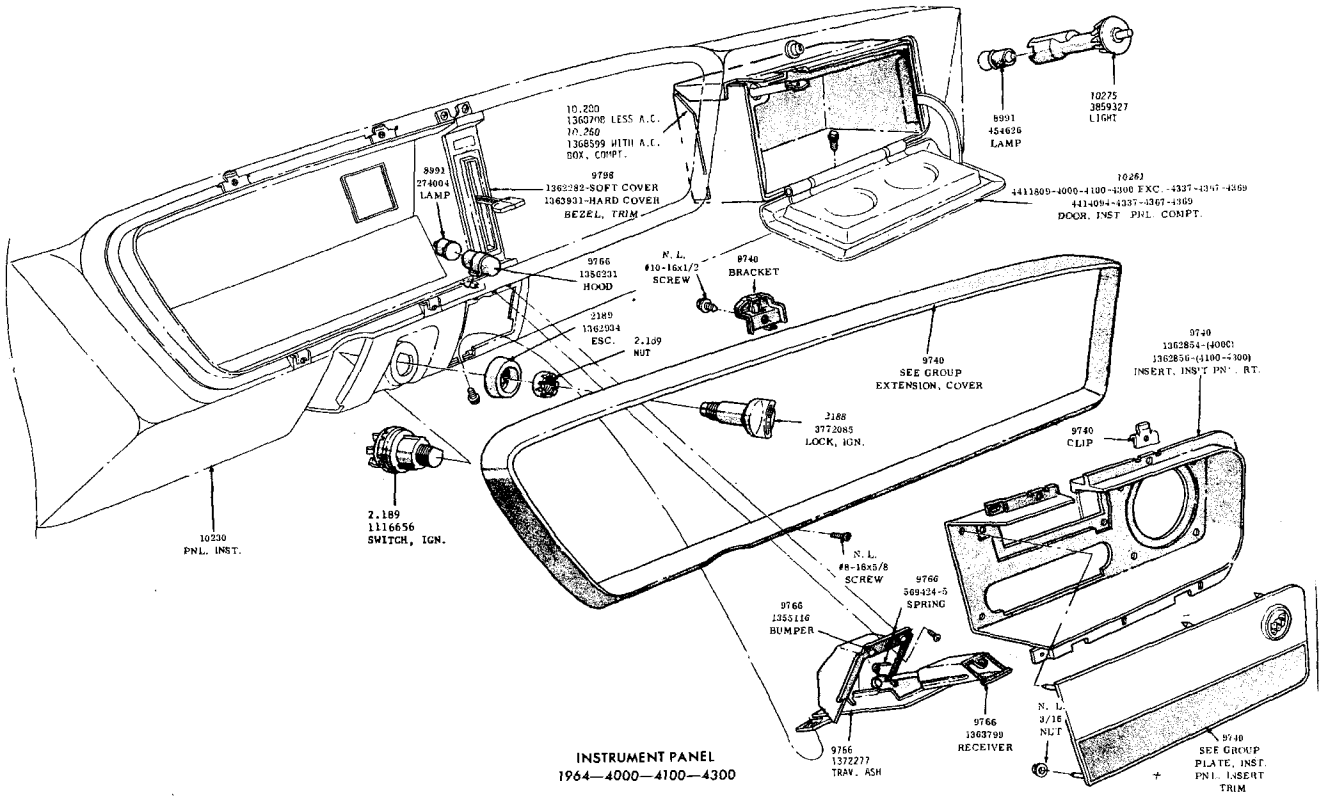

INSTRUMENT PANEL
1964—4000—4100—4300

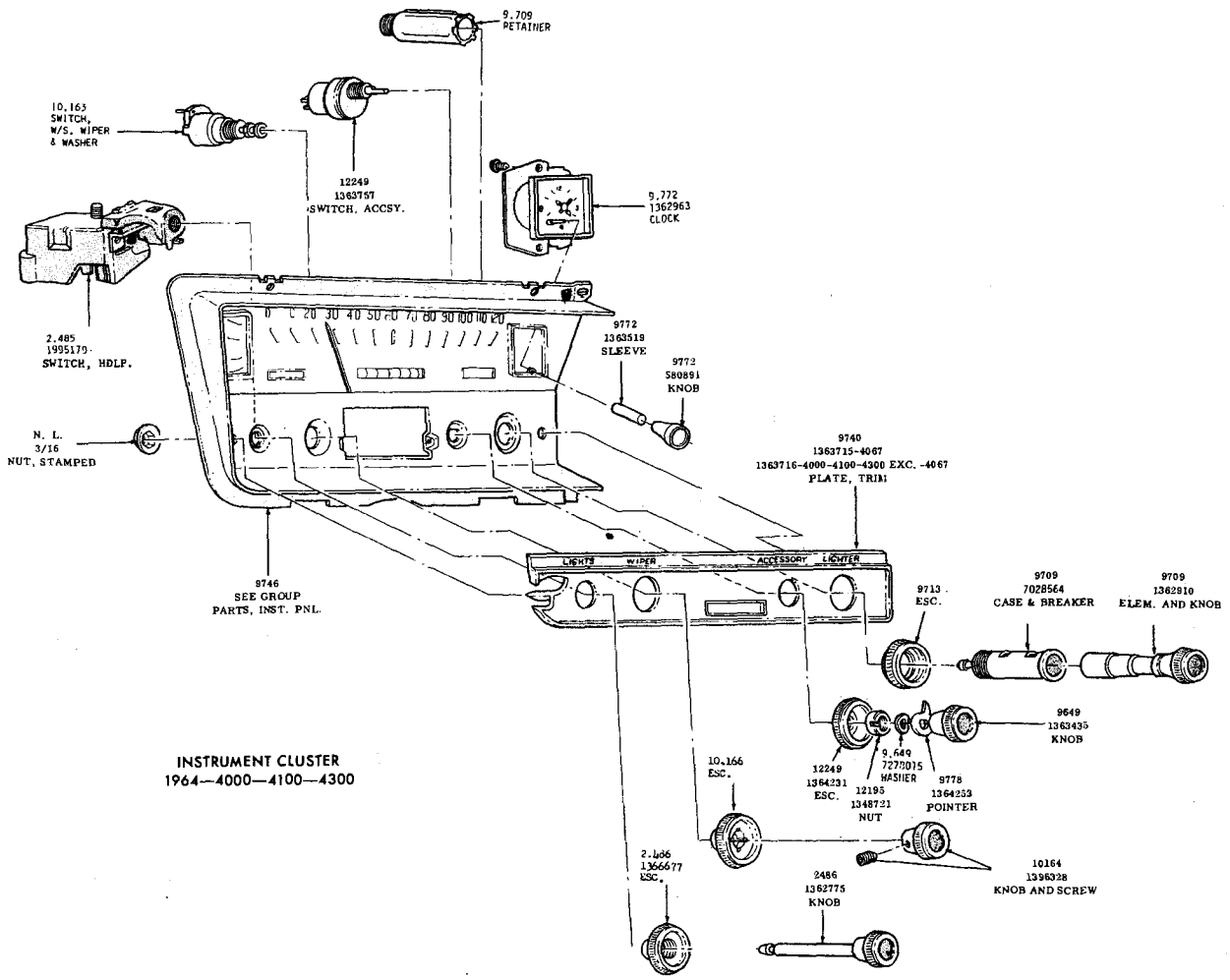

INSTRUMENT CLUSTER
1964—4000—4100—4300

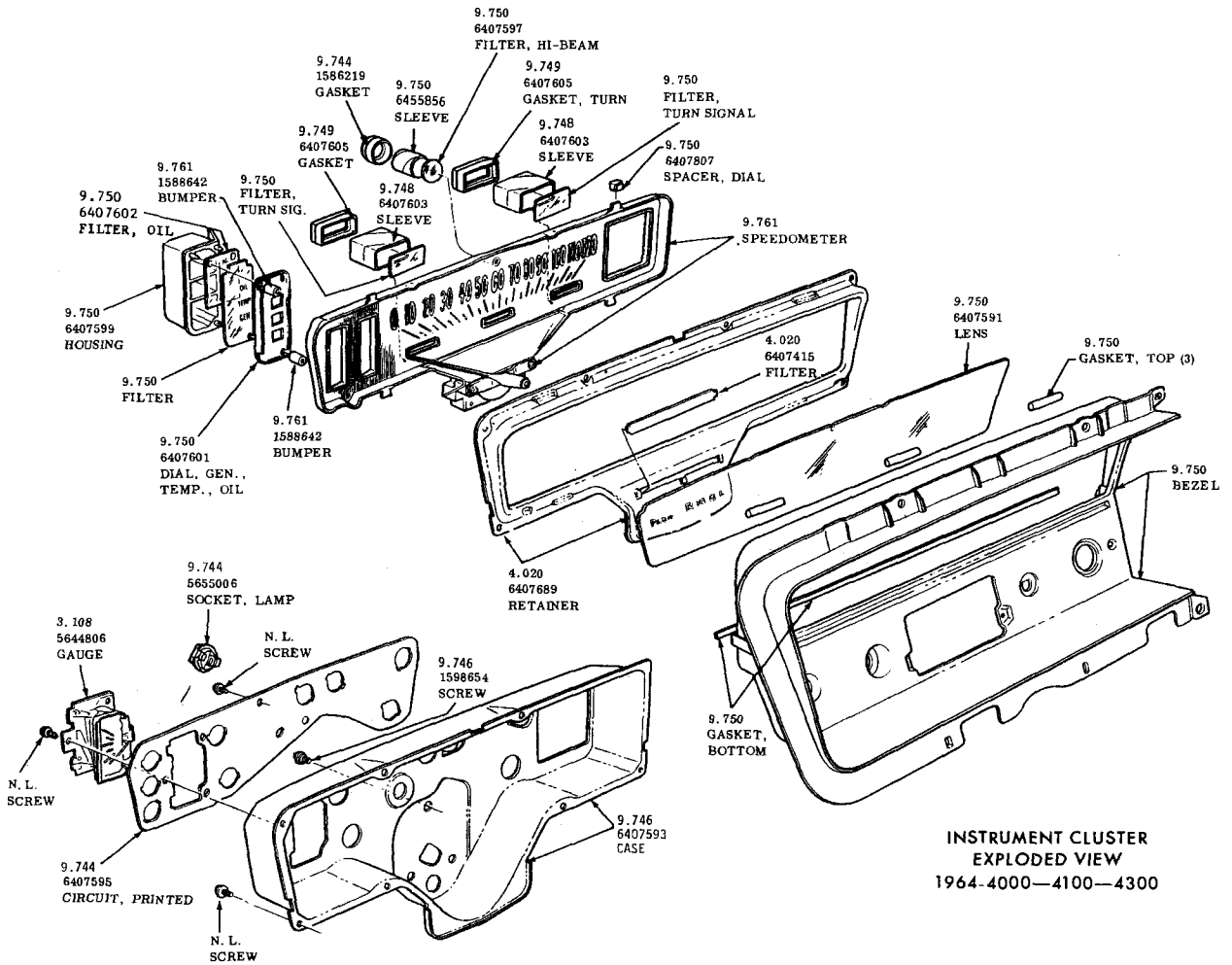

INSTRUMENT CLUSTER
EXPLODED VIEW
1964-4000—4100—4300

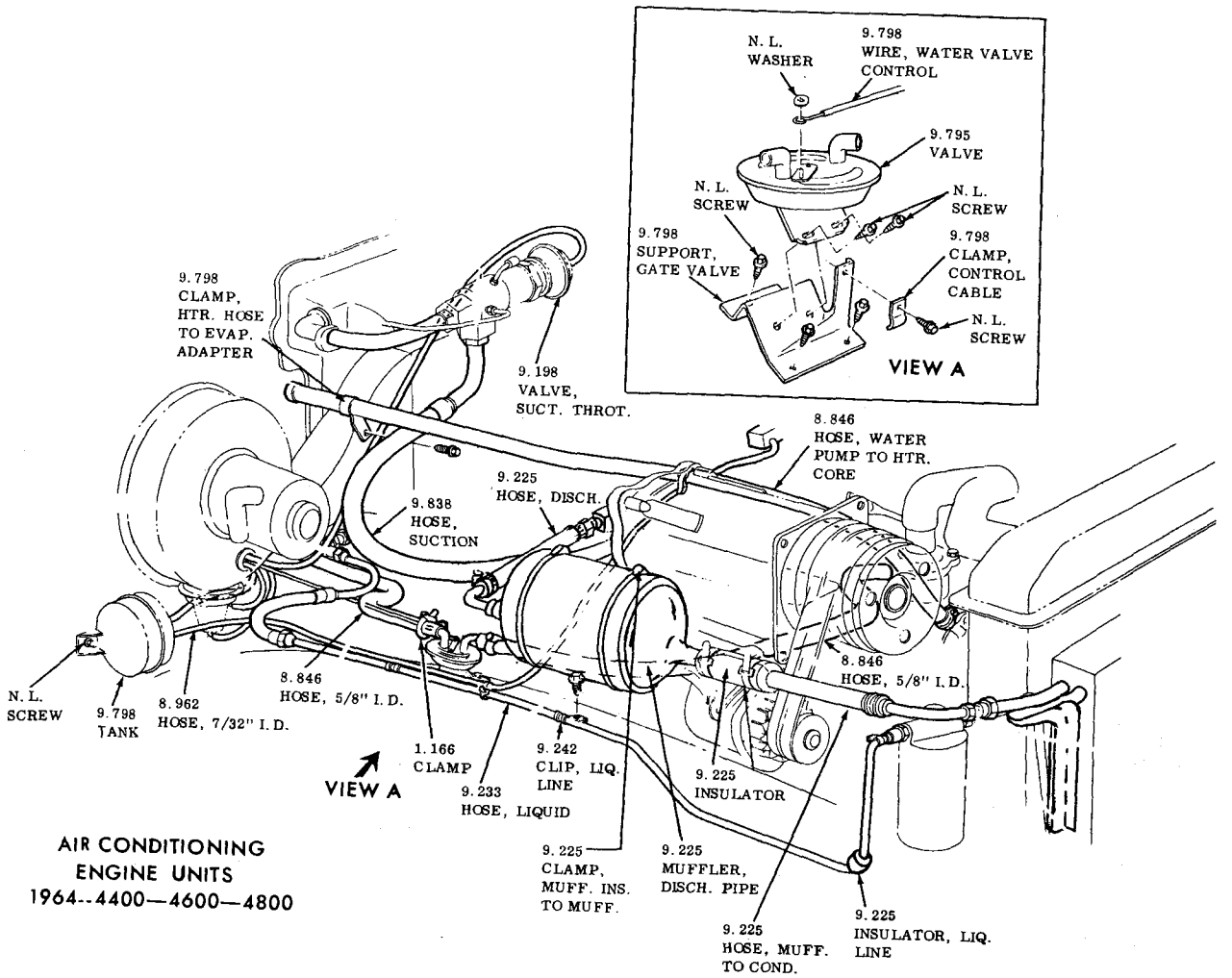

AIR CONDITIONING
ENGINE UNITS
1964--4400—4600—4800

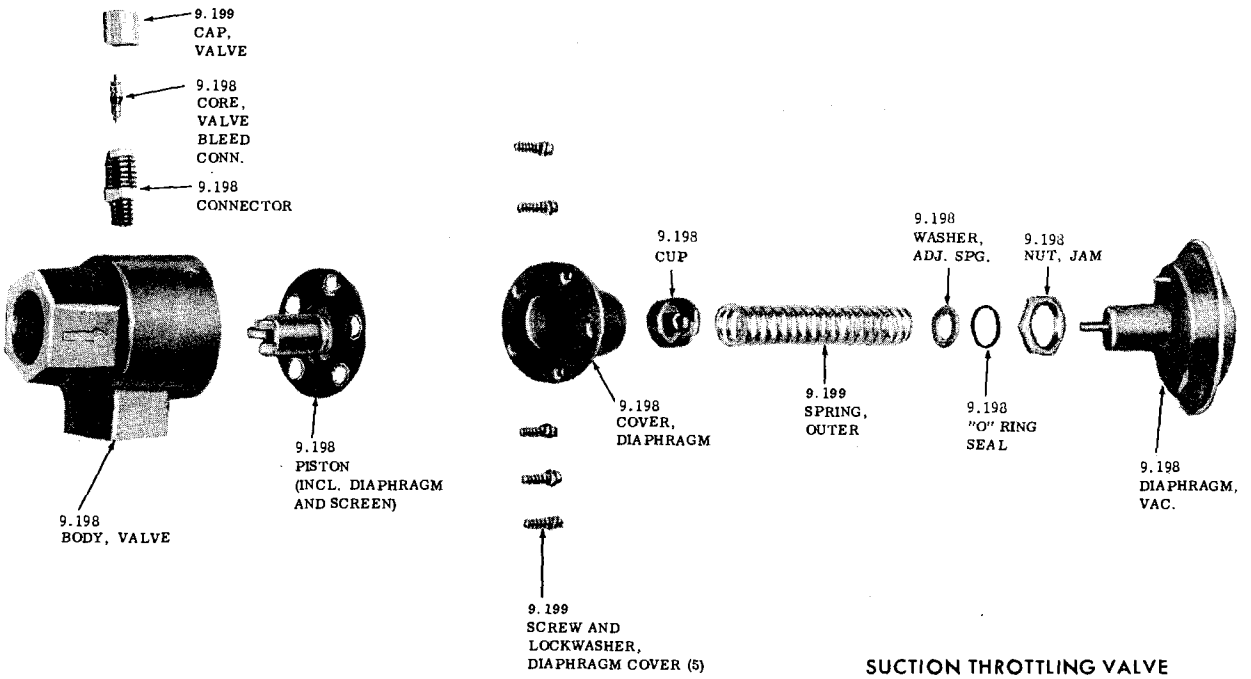

SUCTION THROTTLING VALVE

1964-1965 LE SABRE - WILDCAT
ELECTRA 225 - RIVIERA

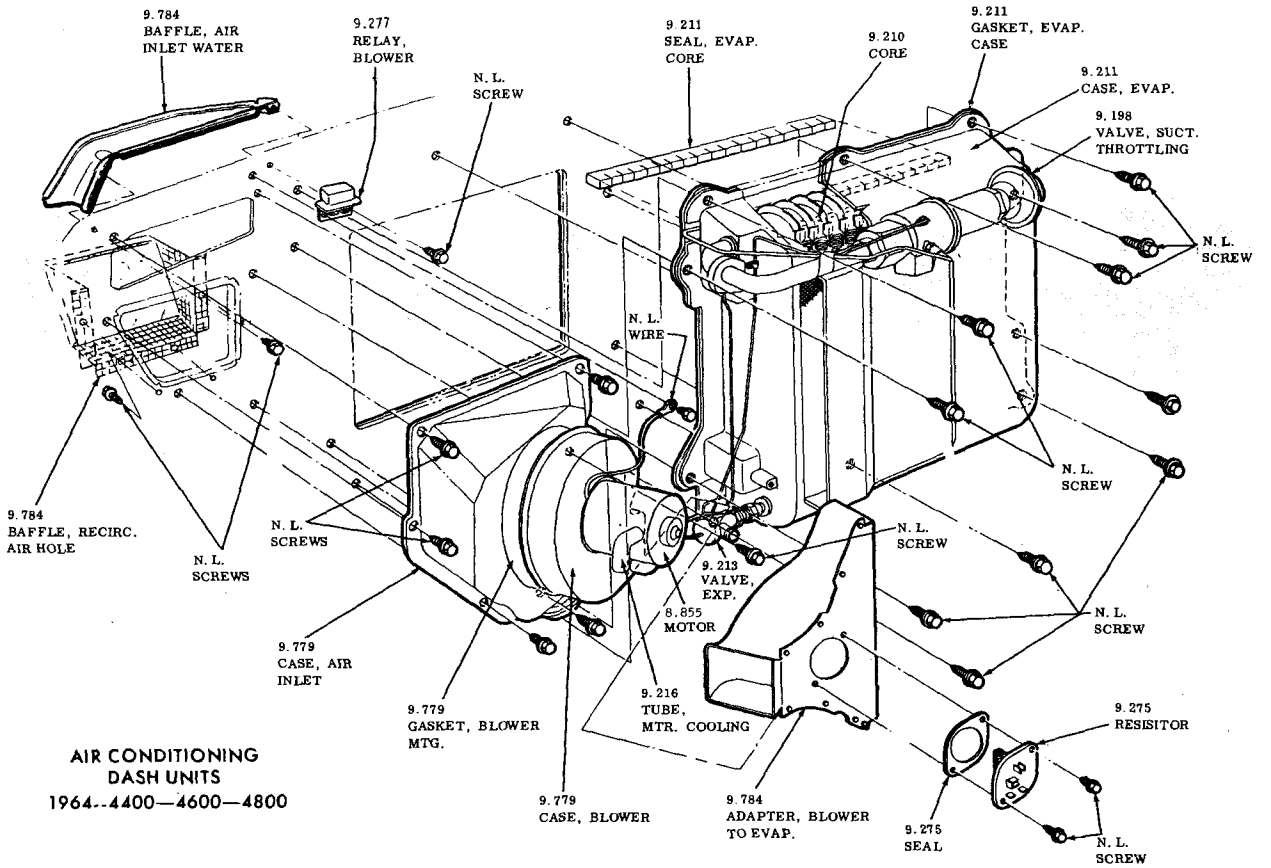

AIR CONDITIONING
DASH UNITS
1964--4400—4600—4800

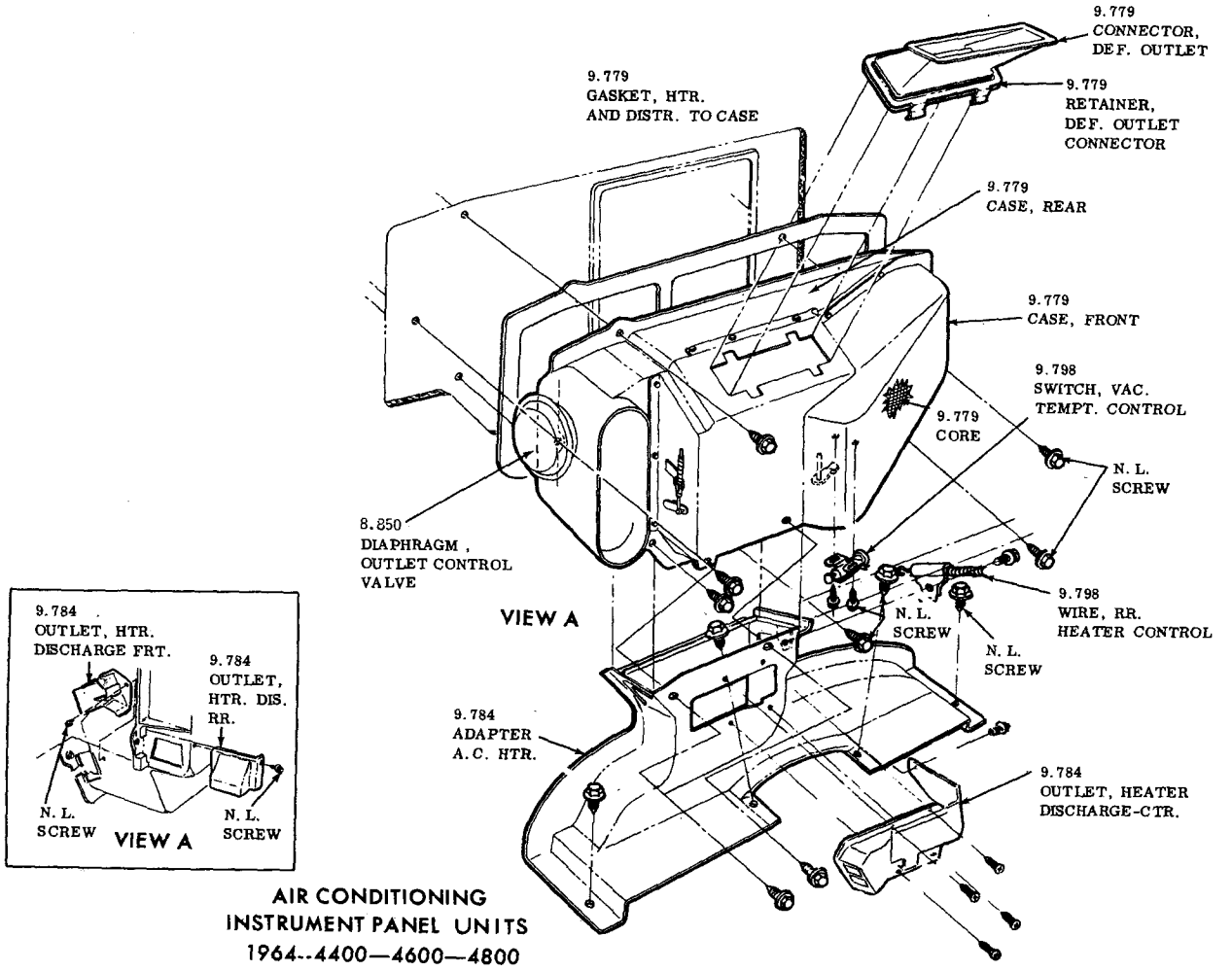

AIR CONDITIONING
INSTRUMENT PANEL UNITS
1964--4400—4600—4800

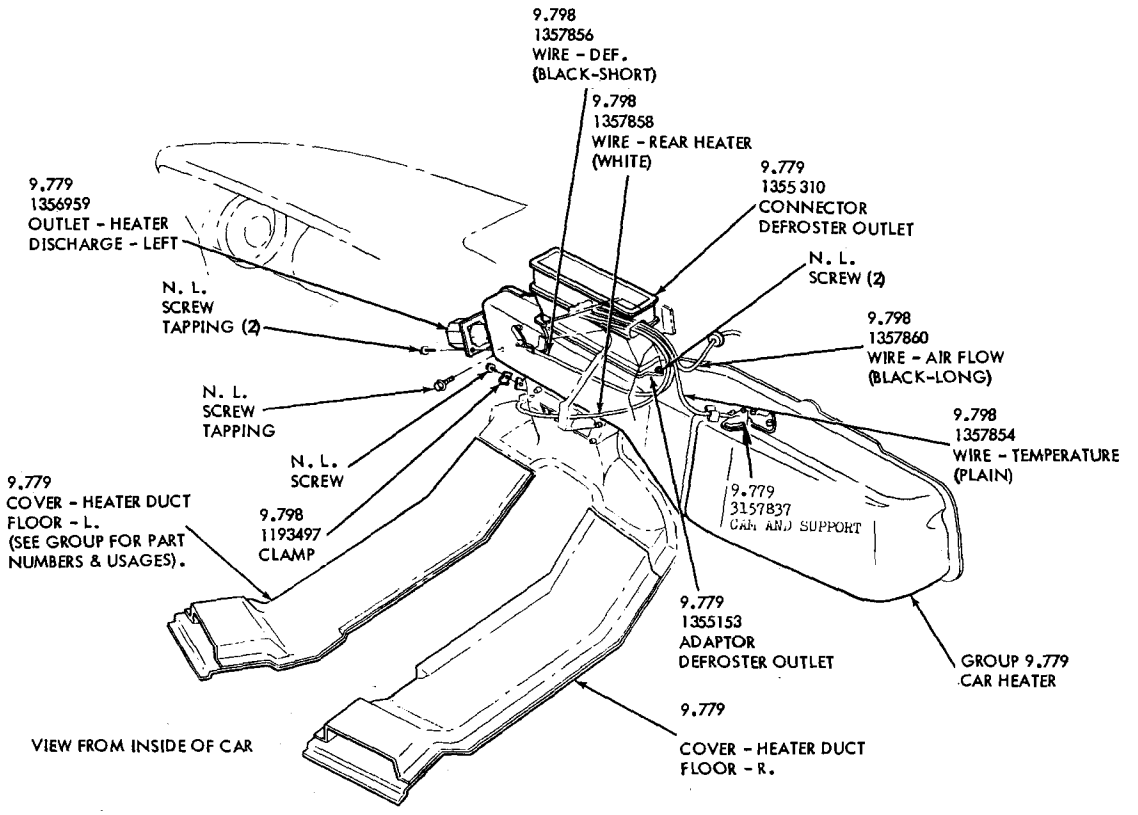

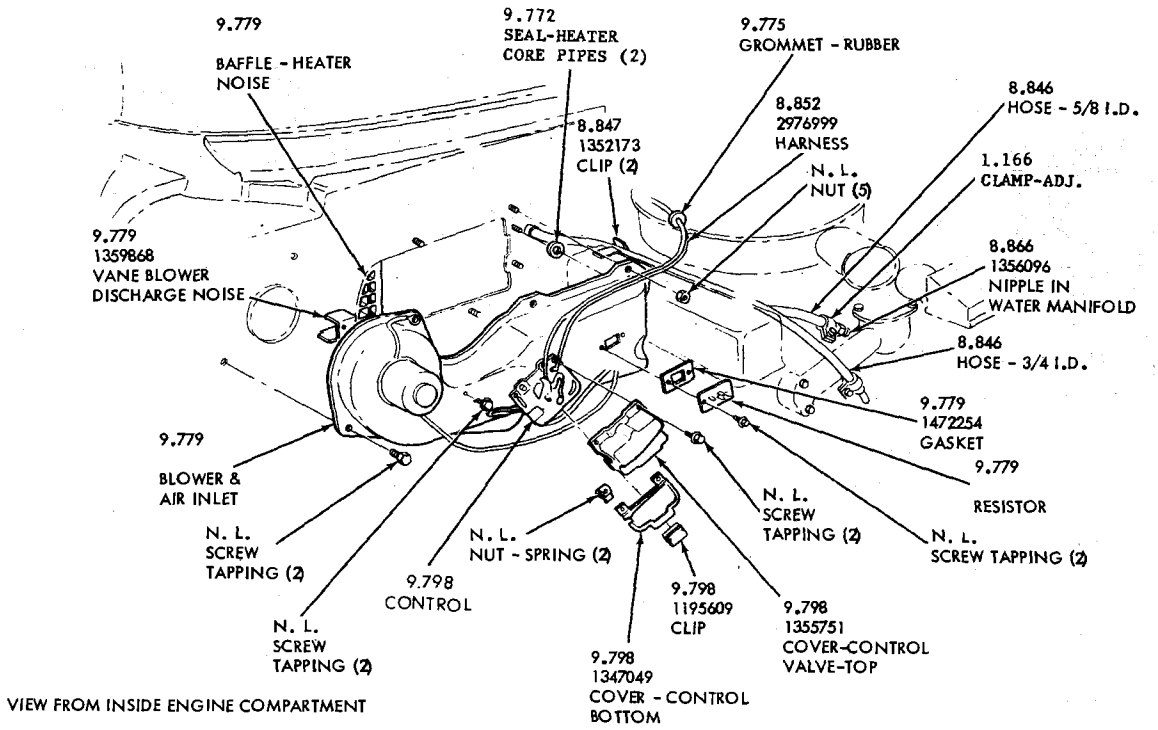

TYPICAL
1963—1964 HEATER & DEFROSTER
4400-4600-4800

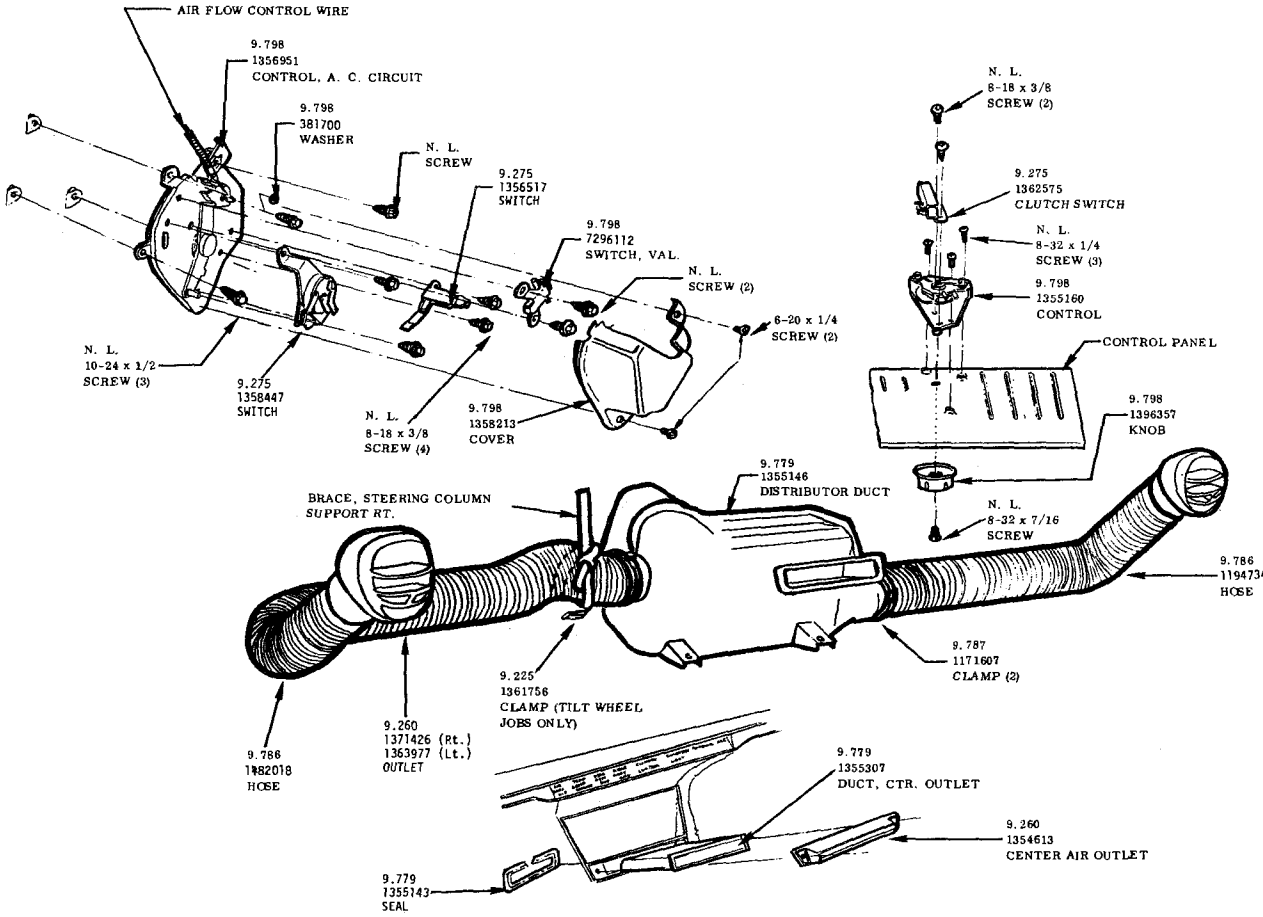

AIR CONDITIONING OUTLETS AND CONTROLS
1964—4400—4600—4800

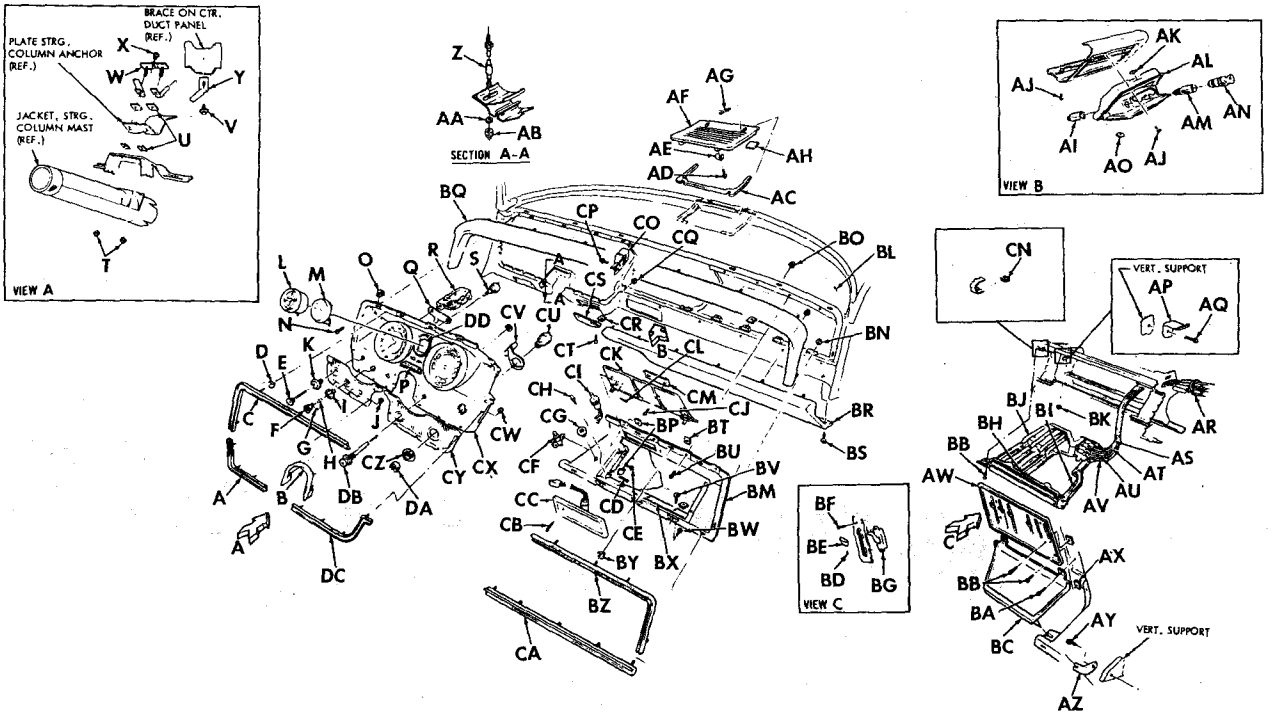

INSTRUMENT PANEL
1963-1964-4400 4600 4800

INSTRUMENT PANEL
1963—1964—4400-4600-4800

Key	Description	Part No.	Group
A	MOLDING, Lower Left	1355295	9.740
B	BEZEL, Steering Column	1356146-All Exc. 4400 3 Speed 1357661-4400 3 Speed	6.750
C	MOLDING, Upper Left	1355297	9.740
D	SNAP	1356502	9.740
E	KNOB, Light Switch		2.486
F	KNOB	1365623-4400-4600 1365624-4800	10.164
G	SCREW, Set 6-32 x .125	—	N.L.
H	BUTTON	1355598	10.164
I	ESCUTCHEON	1358910	10.166
J	NUT, Hex. Machine 6-32	—	N.L.
K	ESCUTCHEON, Switch	1355415	2.486
L	CLOCK		Acc. 9.772
M	MEDALLION (Omit when clock is specified)	1366270	9.740
N	SCREW, Pan Head #8-18 x 9/16		N.L.
O	CLIP	1356860	9.746
P	MONOGRAM, Transmission Shift Indicator Lens		4.038
Q	PLATE, Ground	1356763	2.486
R	SWITCH, Headlamp		2.485
S	SWITCH, Windshield Wiper	1998729-4400-4600 1993607-4800	10.163
T	NUT, 5/16-18	—	N.L.
U	SILENCER	—	N.L.
V	BOLT, Hex. Head 5/16-18 x .625	—	N.L.
W	BRACKET, Steering Column Mounting		6.750
X	SCREW, Hex. Washer Head 1/4-14 x .625	—	N.L.
Y	BRACE, Steering Column Support	1355298-RT. 1355299-LT.	
Z	SHAFT, Speedometer Trip Reset	6406856	9.761
AA	NUT, Shaft Retaining	1564075	9.761
AB	KNOB, Reset Stem	1569776	9.761
AC	GASKET, Instrument Panel Radio Speaker Grille	1355996	9.655
AD	SCREW, Hex. Head #8-18 x .375	—	N.L.
AE	CLIP, Grille Retainer	1356831	9.655
AF	GRILLE, Instrument Panel Radio	1354388	9.655
AG	SCREW, Oval Head #8-15 x .875	—	N.L.
AH	SILENCER, Grille Mounting	1362653	9.655
AI	RETAINER, Cigar Lighter	3771764	9.712
AJ	SCREW, Pan Head 10-16 x .625	—	N.L.
AK	HOOD, Ash Tray Light	1356231	9.766
AL	ASH TRAY, Instrument Panel	See Group	9.766
AM	BARE AND FUSE	1350625	9.709
AN	ELEMENT AND KNOB	1355507	9.709
AO	NUT, Anchor #10-12 x .300	—	N.L.
AP	BRACKET, Heater and Defroster Control Mounting	1355819	9.798
AQ	SCREW, Hex. Head #10-16 x .375	—	N.L.
AR	CLAMP, Hose	1185159	9.242
AS	WIRE, Air Control (Black-Long)		9.798
AT	WIRE, Temperature Control (Plain)		9.798
AU	WIRE, Defroster Control (Black-Short)		9.798
AV	WIRE, Rear Heater Control (White)		9.798
AW	PANEL, Control and Accessory Switch Mounting	1354328	9.740
AX	NUT, Anchor #8-15 x .310	—	N.L.
AY	SCREW, Hex. Hd. #10-16 x .375	—	N.L.
AZ	SUPPORT, Trim Plate	1356844-RT. 1356845-LT.	9.740
BA	SCREW, Pan Head #8-32 x .500	—	N.L.
BB	SCREW, Oval Head #8-15 x .625	—	N.L.
BC	PLATE, Trim	1354547	9.740
BD	SCREW, Hex. Socket Set #6-32 x .187	—	N.L.
BE	KNOB	1361624	9.798
BF	SCREW, Oval Head #6-32 x .312	—	N.L.
BG	SWITCH, Courtesy Light	1358959	2.773
BH	LENS	1366087	9.740
BI	BRACKET	1355478	9.740
BJ	CONTROL	1354497	9.798
BK	NUT, Hex. Flange #10-24	—	N.L.
BL	PANEL, Instrument	See Group	10.230
BM	PANEL, Instrument Center Right	See Group	10.230
BN	NUT, Stamped 1/8	—	N.L.
BO	NUT, Hex. Lock #8-32	—	N.L.
BP	NUT, Anchor #8-15 x .310		
BQ	EXTENSION, Cover	See Group	14.655
BR	COVER, Instrument Panel Lower	See Group	14.655
BS	SCREW, Hex. Head #8-18 x .750	—	N.L.
BT	CLIP	1356860	9.746
BU	SCREW, Pan Head #8-18 x .562	—	N.L.
BV	SCREW, Round Head Cross Recess Tapping	—	N.L.
BW	SCREW, Hex. Hd. #8-32 x .312	—	N.L.
BX	BOX, Instrument Panel	See Group	10.260
BY	SNAP	1356502	9.740
BZ	MOLDING, Upper Right	1355296	9.740
CA	MOLDING, Lower Right	1355294	9.740
CB	SCREW, Oval Head #8-18 x .625	—	N.L.
CC	LAMP, Courtesy	1357126	2.774
CD	SCREW, Oval Head #8-15 x .437	—	N.L.
CE	SCREW, Pan Head #6-32 x .375	—	N.L.
CF	LOCK, Instrument Panel Compartment Door	1380871	10.266
CG	ESCUTCHEON, Lock	1356651	10.267
CH	BUMPER	1361808	10.263
CI	SWITCH		10.275
CJ	SCREW, Flat Head #6-32 x .187	—	N.L.
CK	DOOR		10.261
CL	SCREW, Flat Head #8-32 x .375	—	N.L.
CM	MONOGRAM, Instrument Panel	See Group	10.256
CN	NUT, Anchor #8-15 x .310	—	N.L.
CO	BAZZER, Speed Safety		9.762
CP	SCREW, Hex. Head #10-16 x .500	—	N.L.
CQ	NUT, External Lock #8-32	—	N.L.
CR	NUT, Anchor #8-15 x .280	—	N.L.
CS	DOOR, Instrument Panel Access	See Group	10.230
CT	SCREW, Oval Head #8-15 x .625	—	N.L.
CU	SWITCH, Ignition		2.189
CV	HOOD, Lamp	1356677	9.740
CW	NUT, Stamped 1/8	—	N.L.
CX	CLUSTER, Instrument	See Group	9.746
CY	PANEL, Trim (Wildcat Only)		9.740
CZ	ESCUTCHEON, Ignition Switch	1359653	2.189
DA	NUT, Ignition Lock Repairing		9.798
DB	KNOB, Control and Wire	1355168-RT. 1355169-LT.	9.798
DC	MOLDING, Lower Center	1355291	9.740
DD	RETAINER, Clock Spring	6406259	9.772

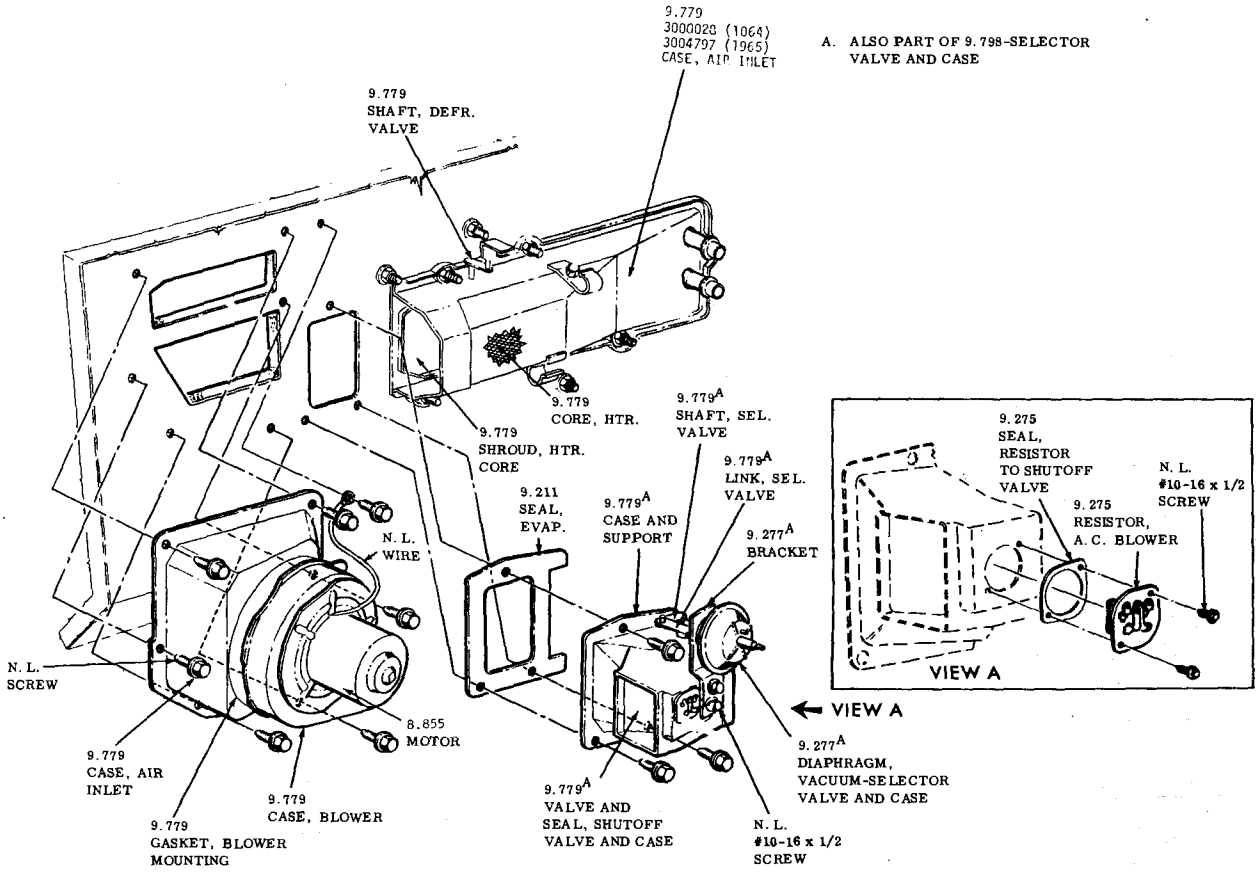

AIR CONDITIONING--DASH UNITS

1964-1965 RIVIERA

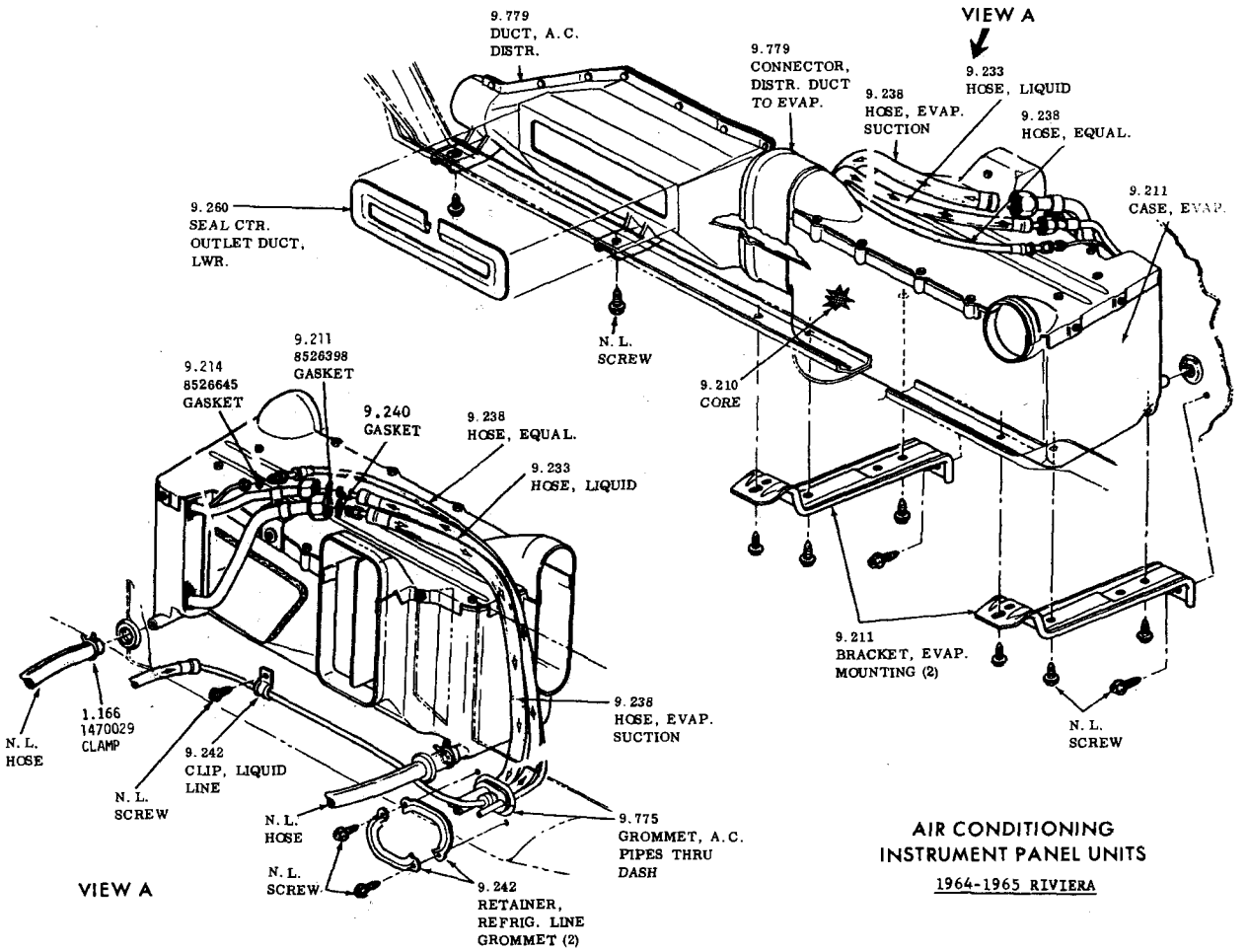

AIR CONDITIONING
INSTRUMENT PANEL UNITS

1964-1965 RIVIERA

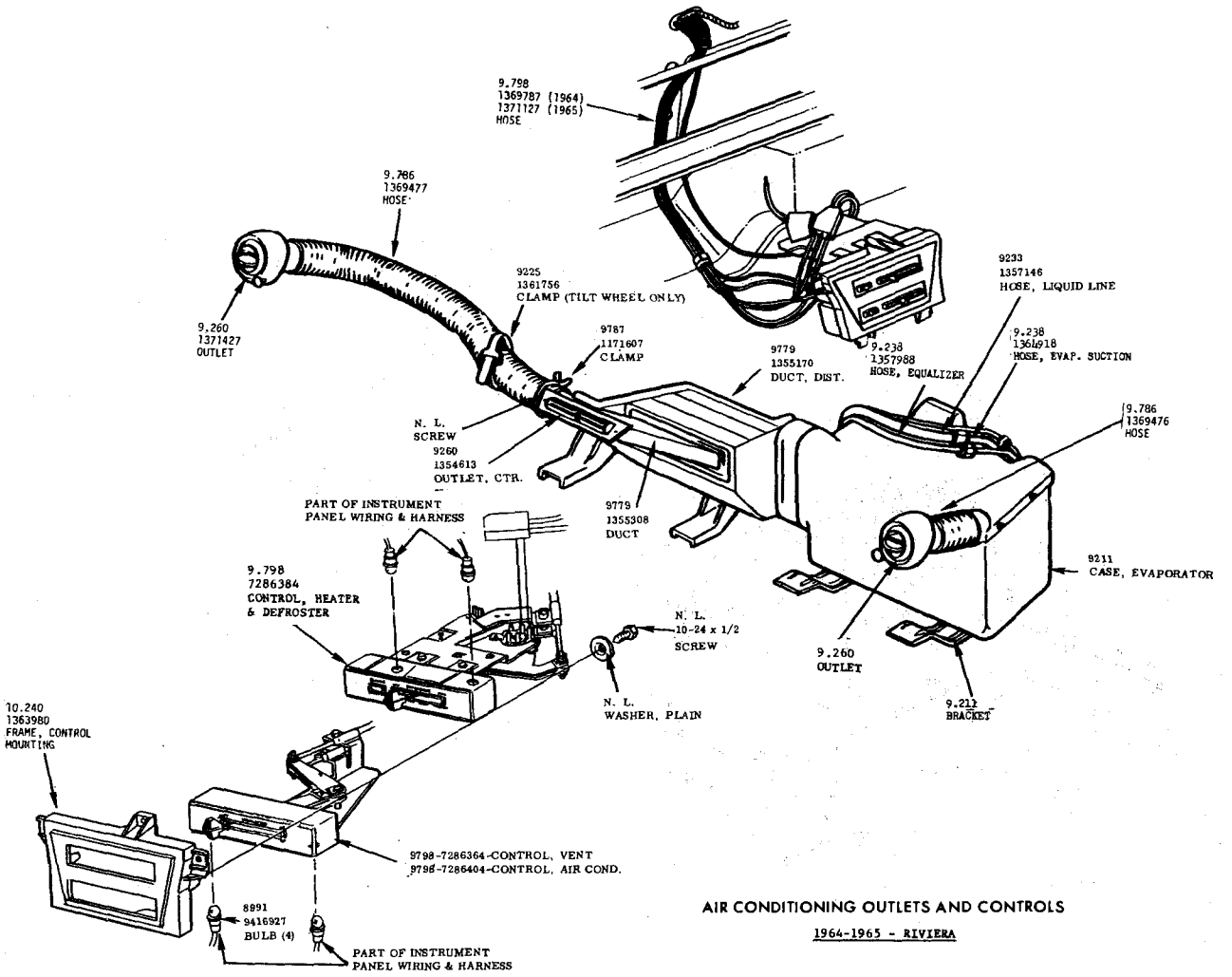

AIR CONDITIONING OUTLETS AND CONTROLS

1964-1965 - RIVIERA

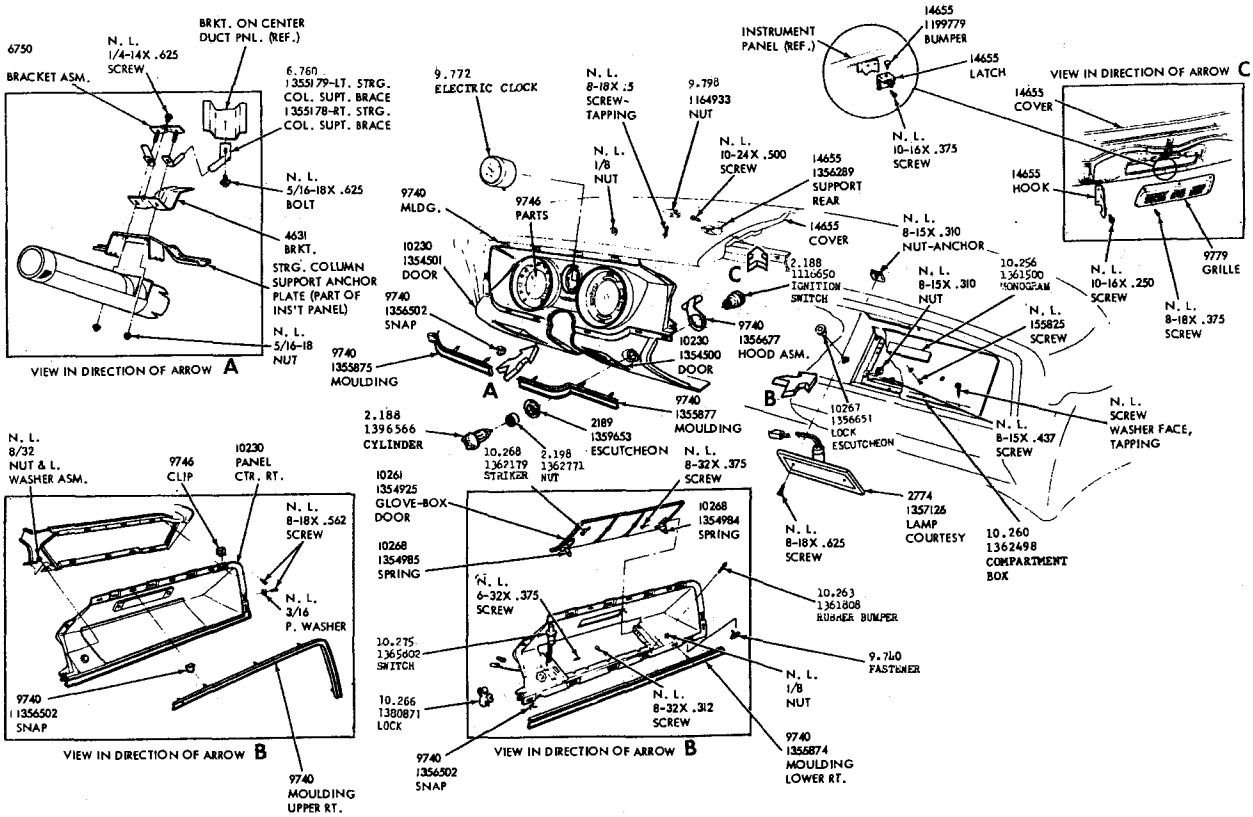

INSTRUMENT PANEL
1964-4747

INSTRUMENT PANEL TRIM 1964 — 4600-4700-4800

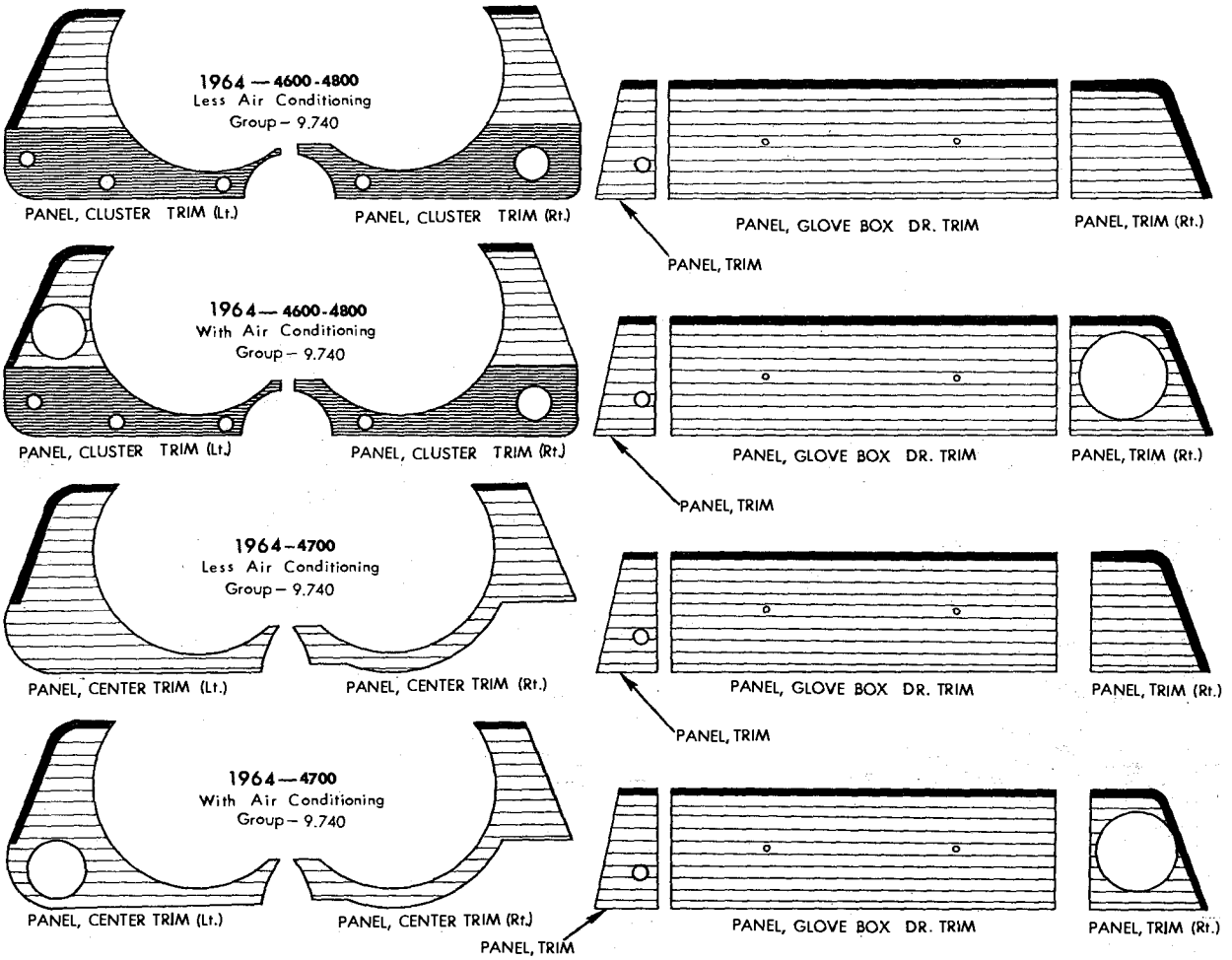

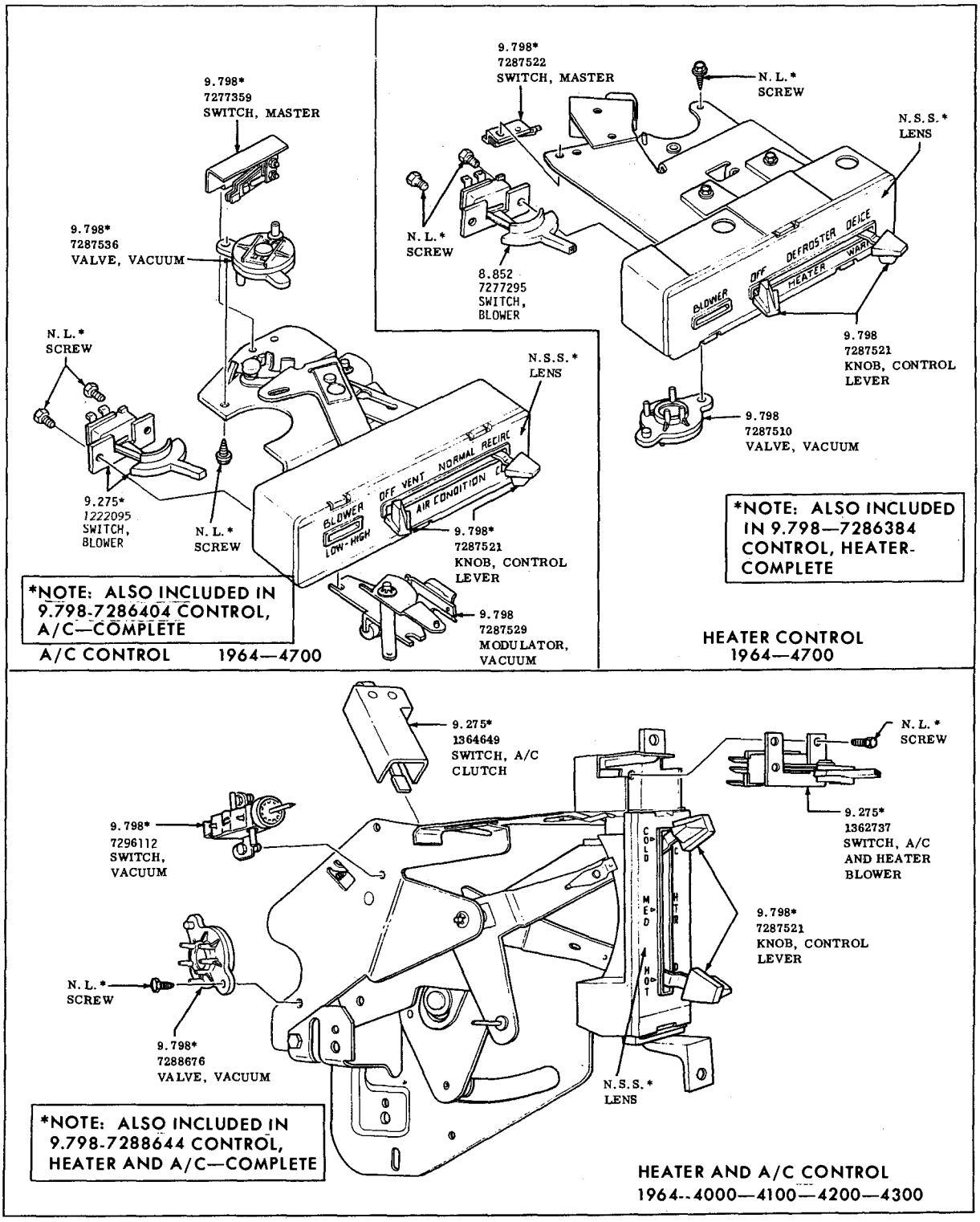

1964 HEATER AND A/C CONTROLS

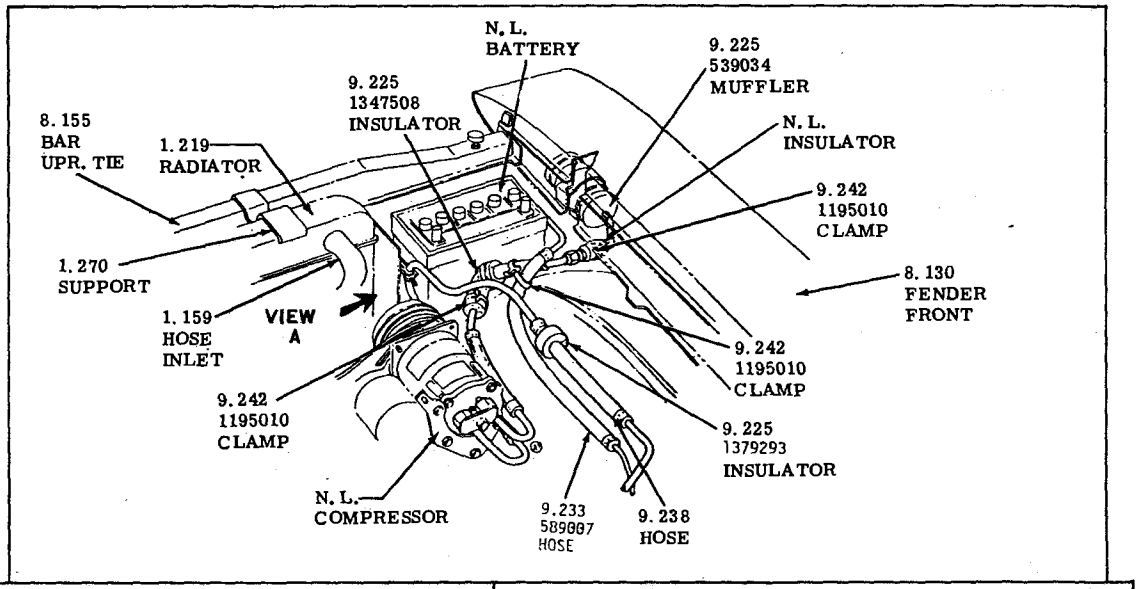

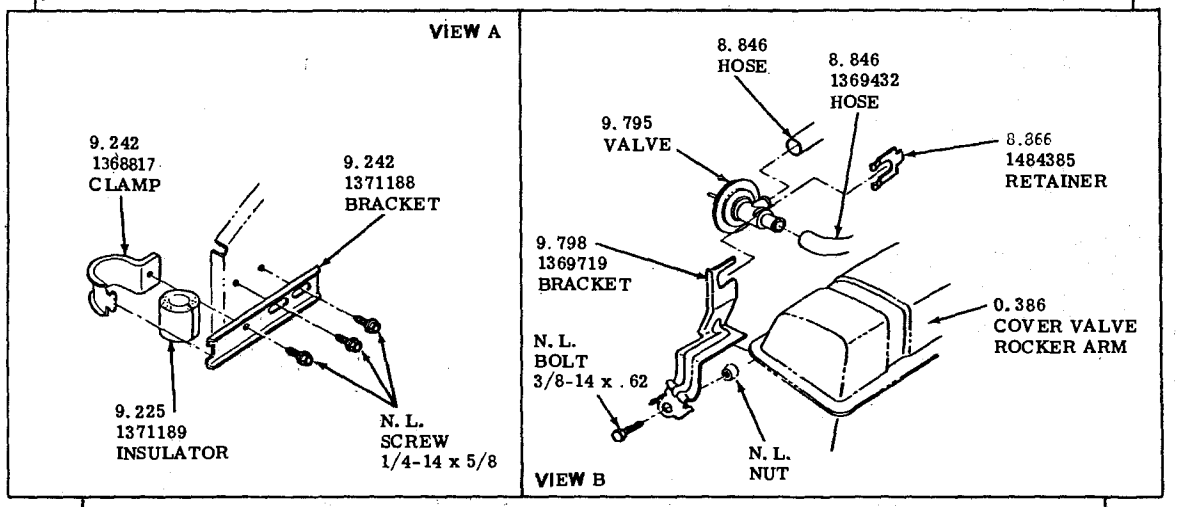

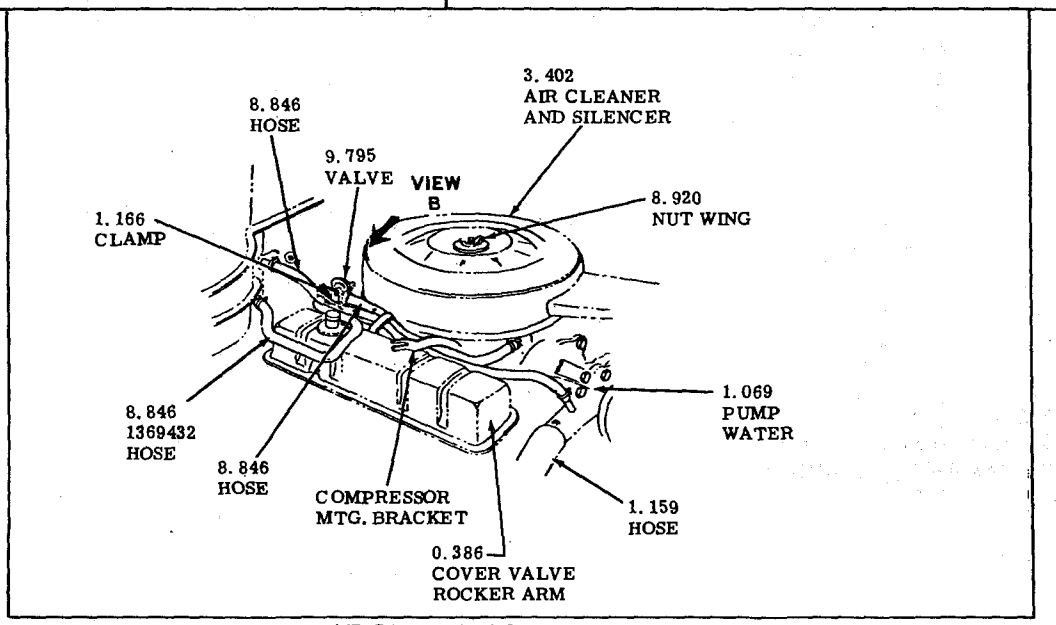

AIR CONDITIONING ENGINE COMP. UNITS
1965-SPECIAL-SKYLARK

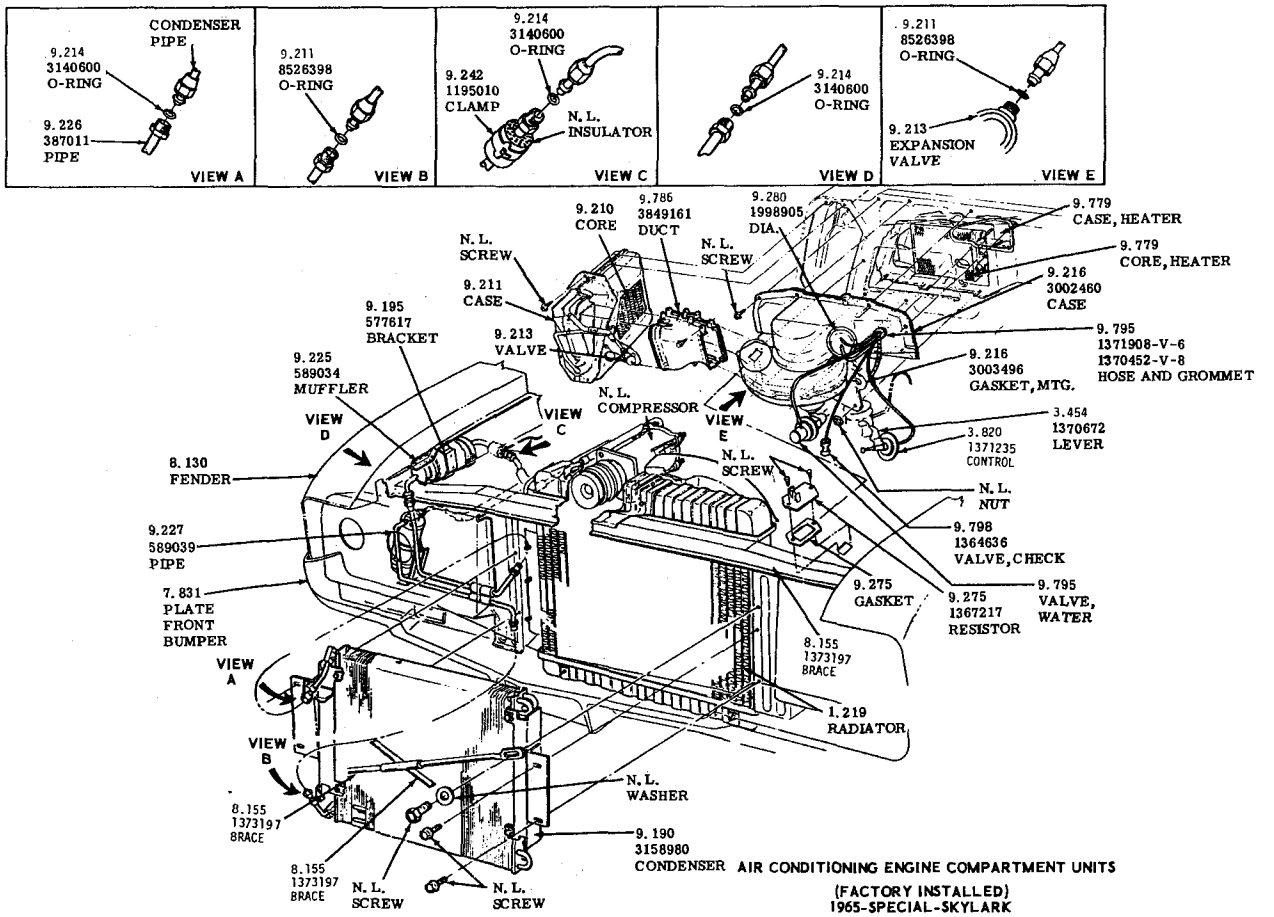

AIR CONDITIONING ENGINE COMPARTMENT UNITS
(FACTORY INSTALLED)
1965-SPECIAL-SKYLARK

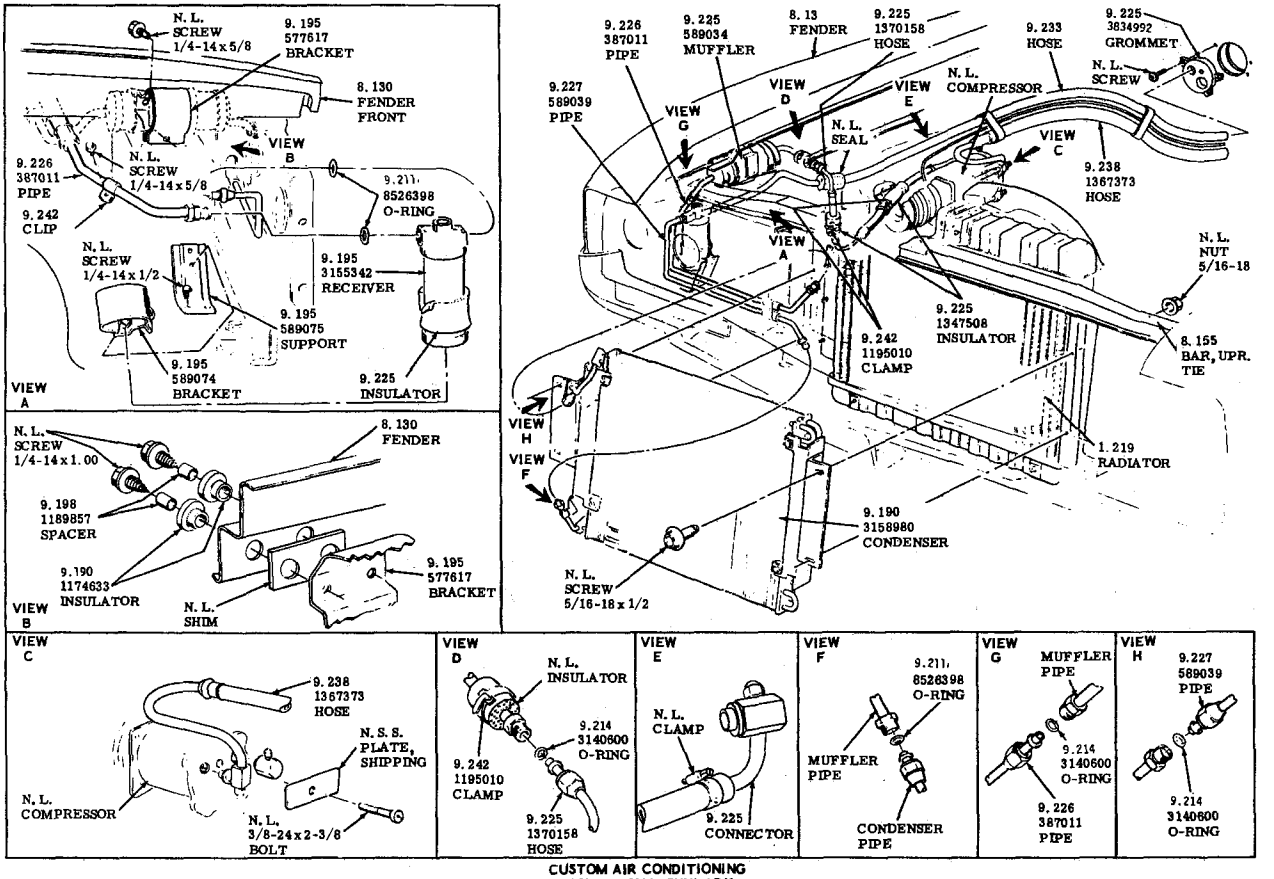

CUSTOM AIR CONDITIONING
1965-SPECIAL-SKYLARK

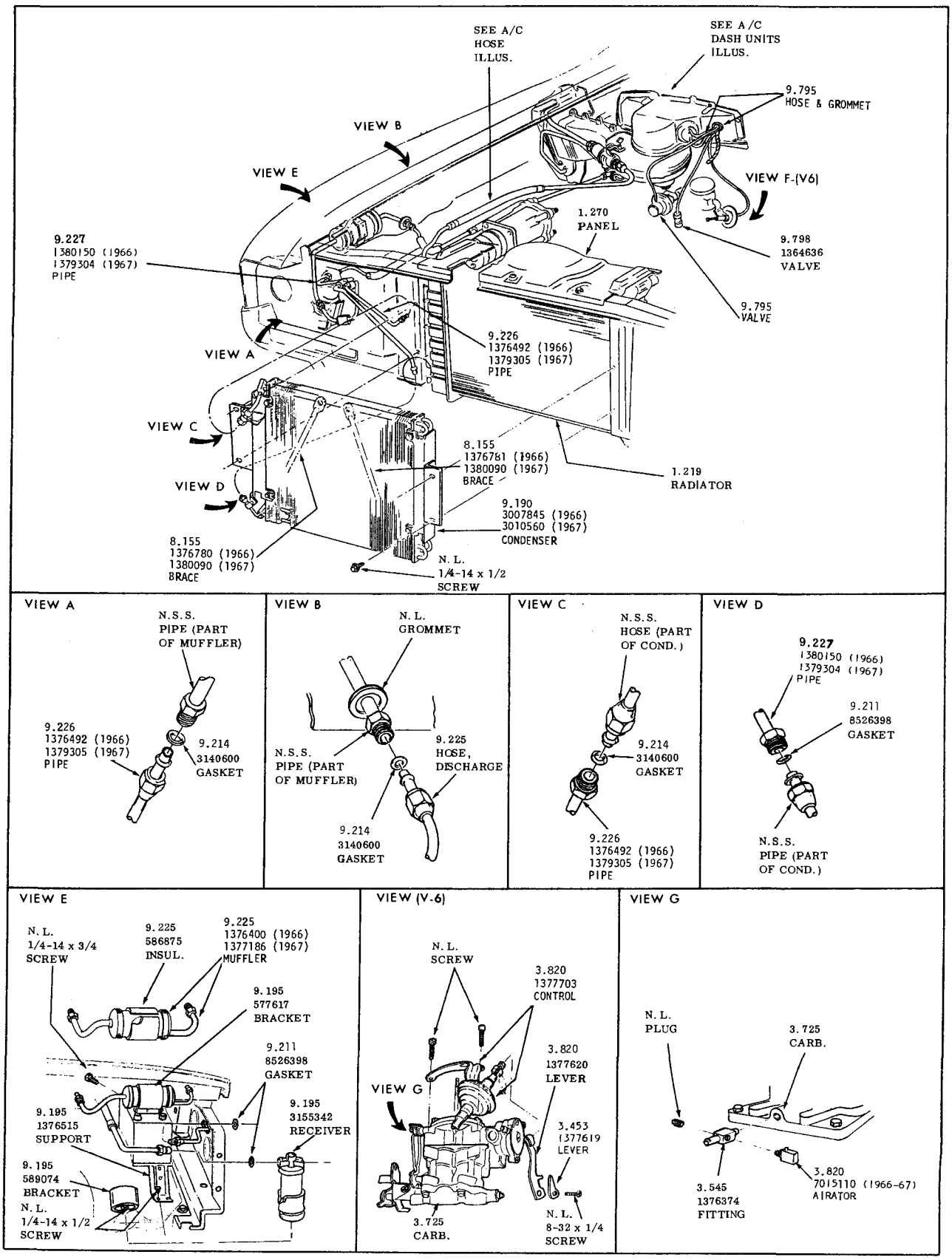

AIR CONDITIONING ENGINE UNITS

1965-1967 - SPECIAL - SKYLARK - SKYLARK GRAN SPORT

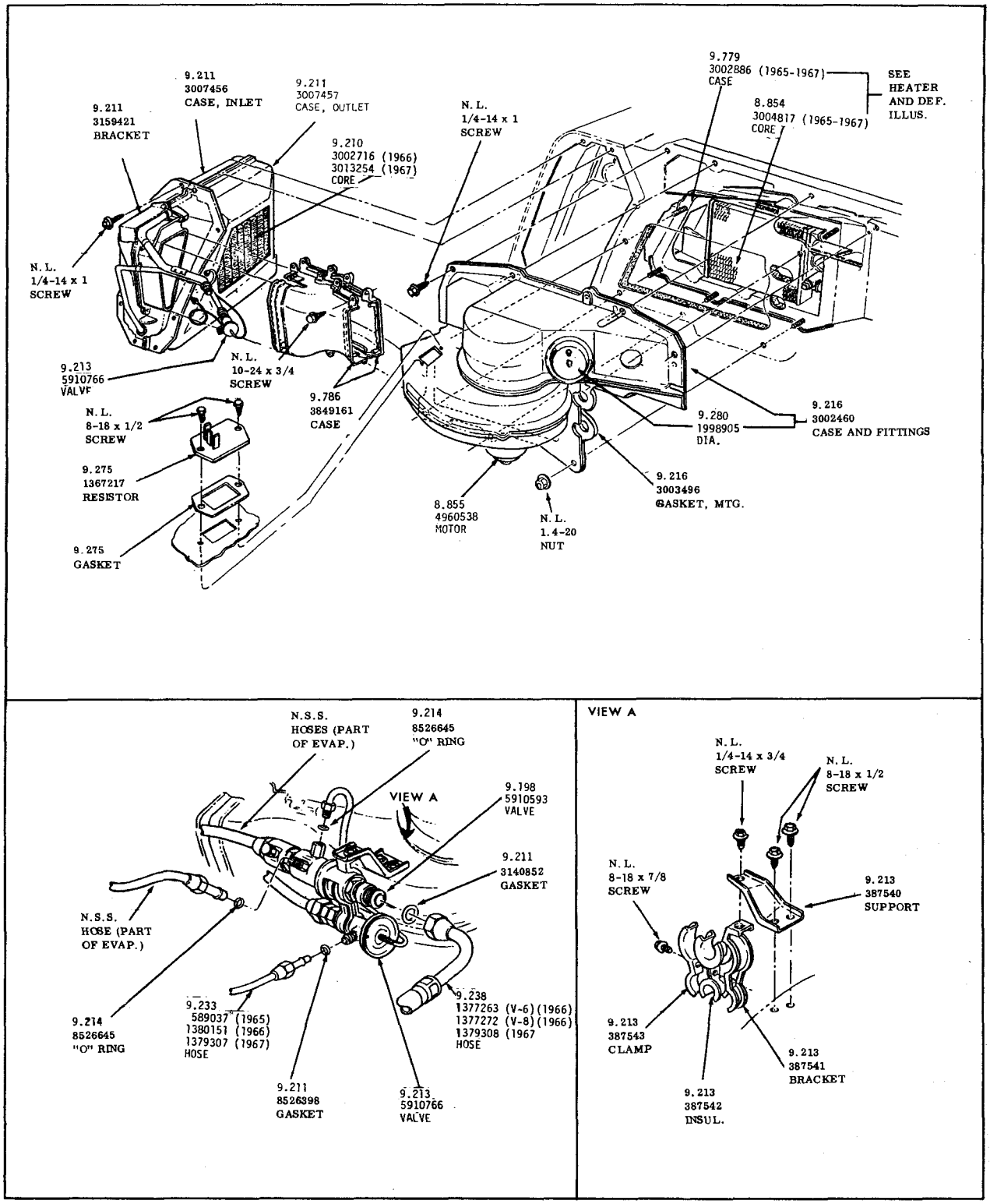

AIR CONDITIONING DASH UNITS AND
SUCTION THROTTLING VALVE
1965-1967 - SPECIAL - SKYLARK - SKYLARK GRAN SPORT

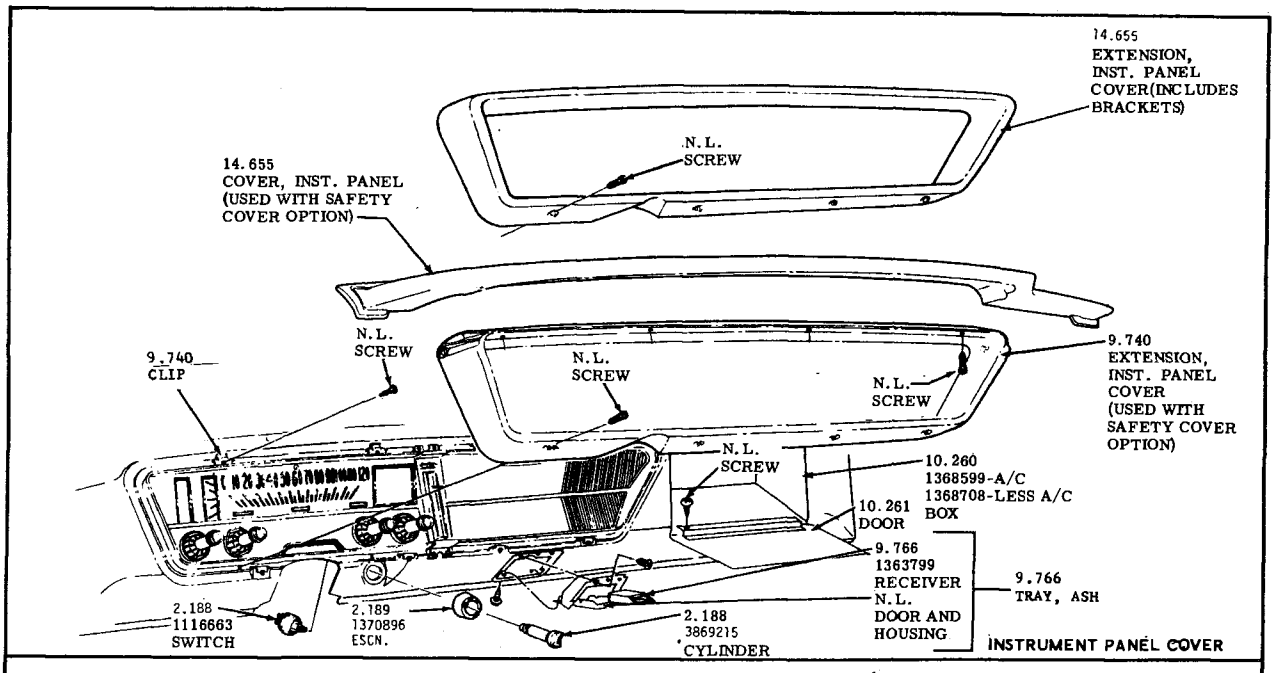

INSTRUMENT PANEL COVER

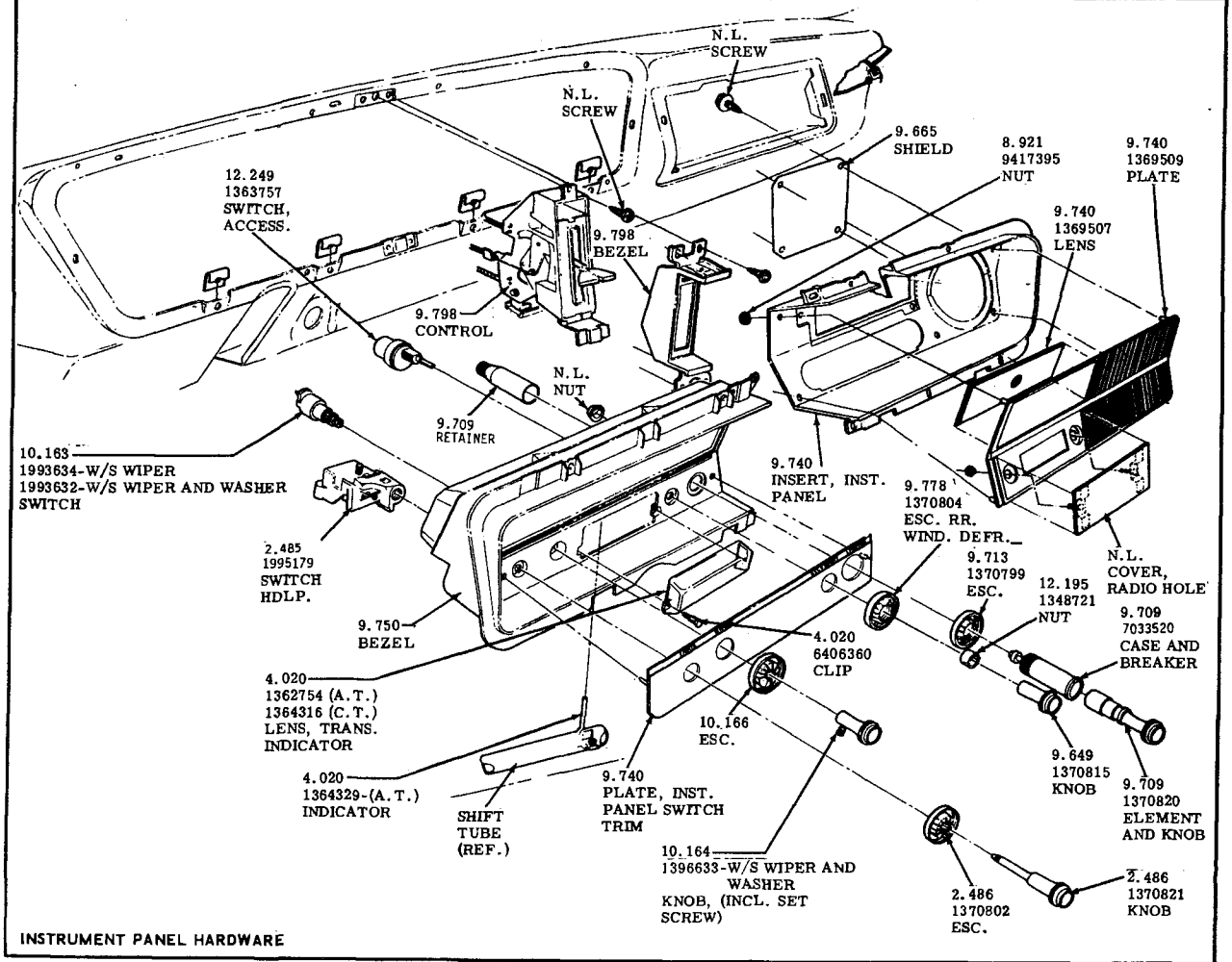

INSTRUMENT PANEL HARDWARE

INSTRUMENT PANEL
1965 - SPECIAL-SKYLARK

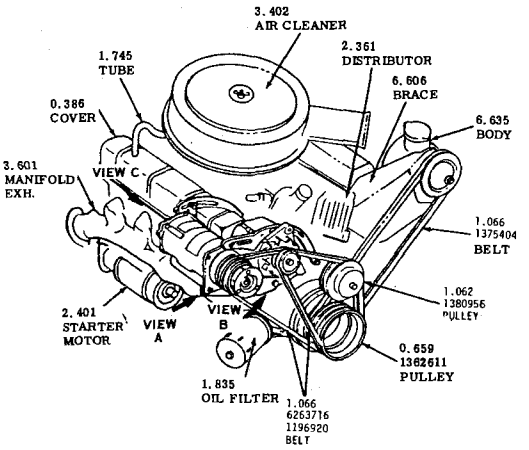

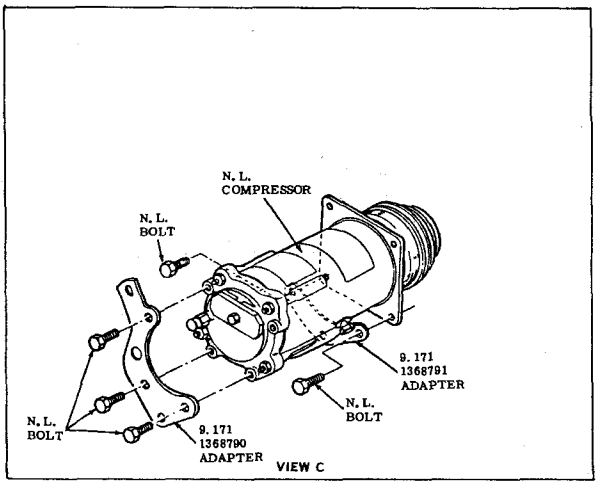

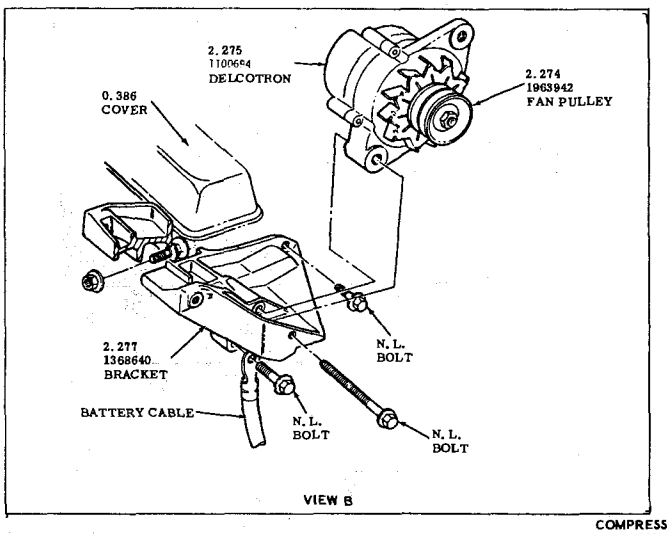

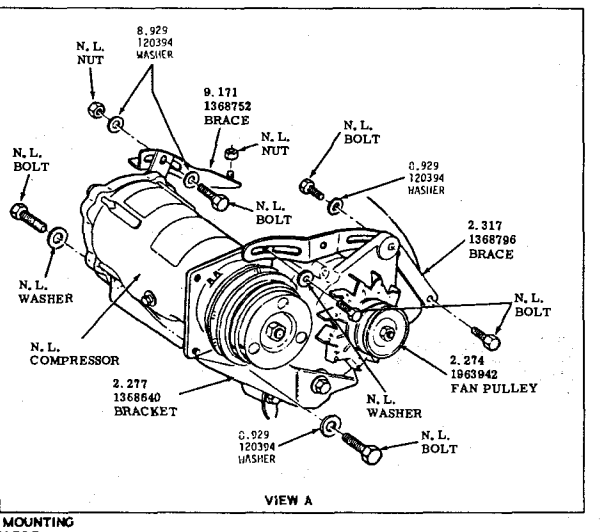

COMPRESSOR MOUNTING
1965-LESABRE

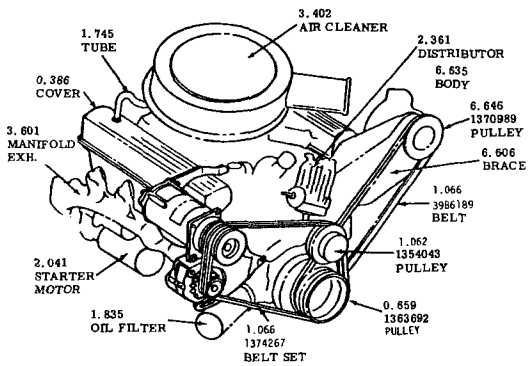

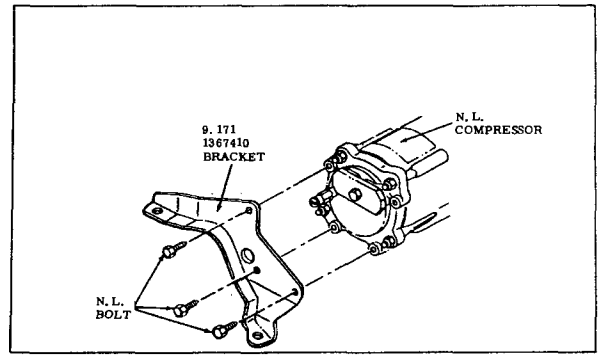

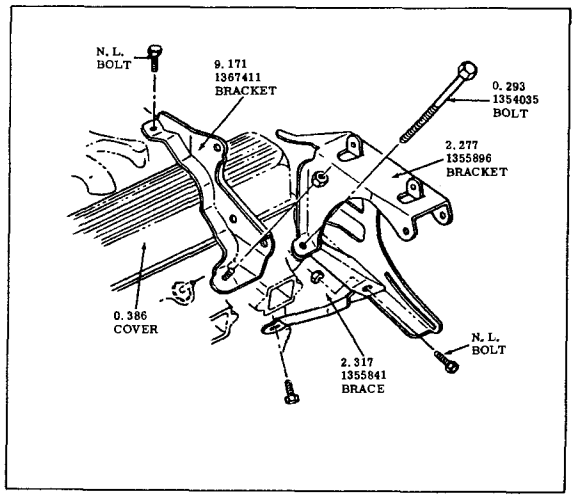

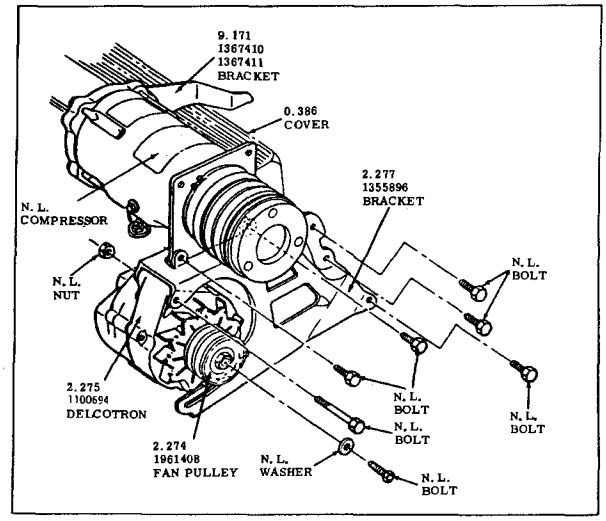

COMPRESSOR MOUNTING
1965 - WILDCAT-ELECTRA 225

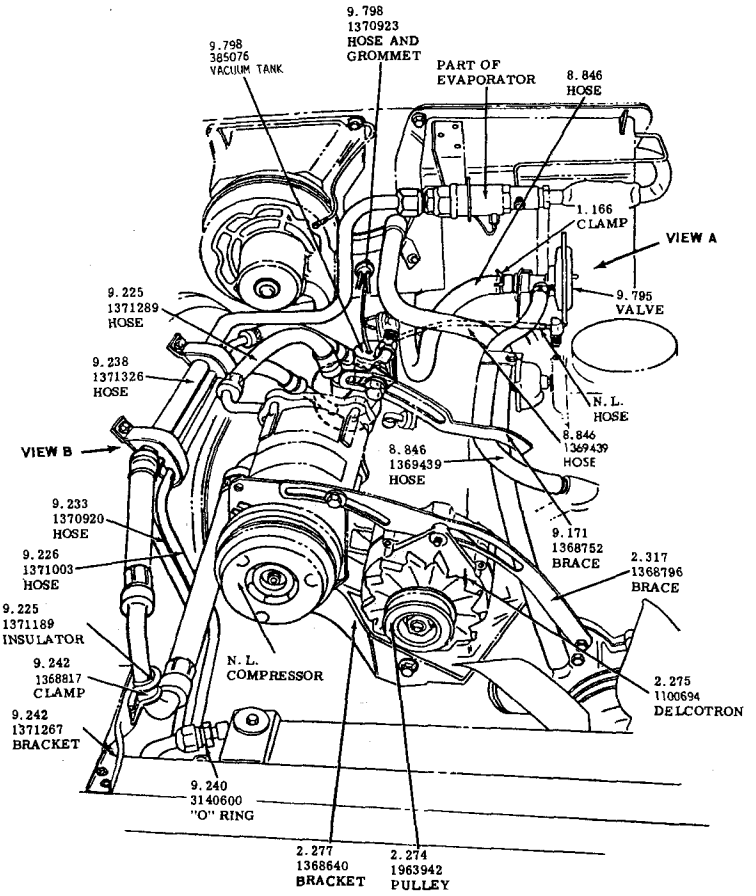

AIR CONDITIONING HOSES
1965 - LESABRE

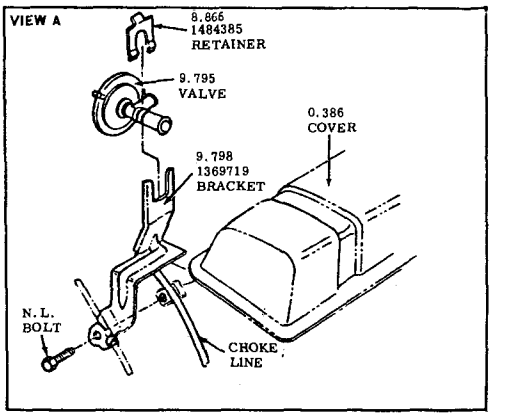

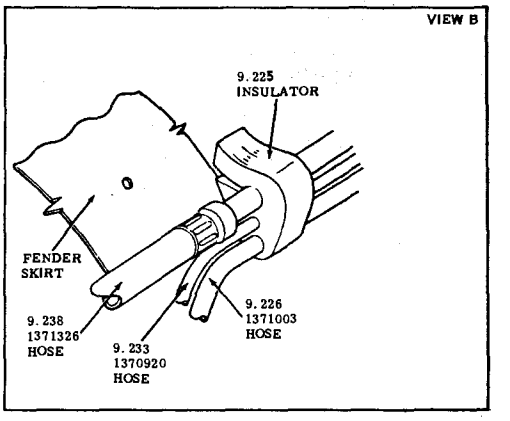

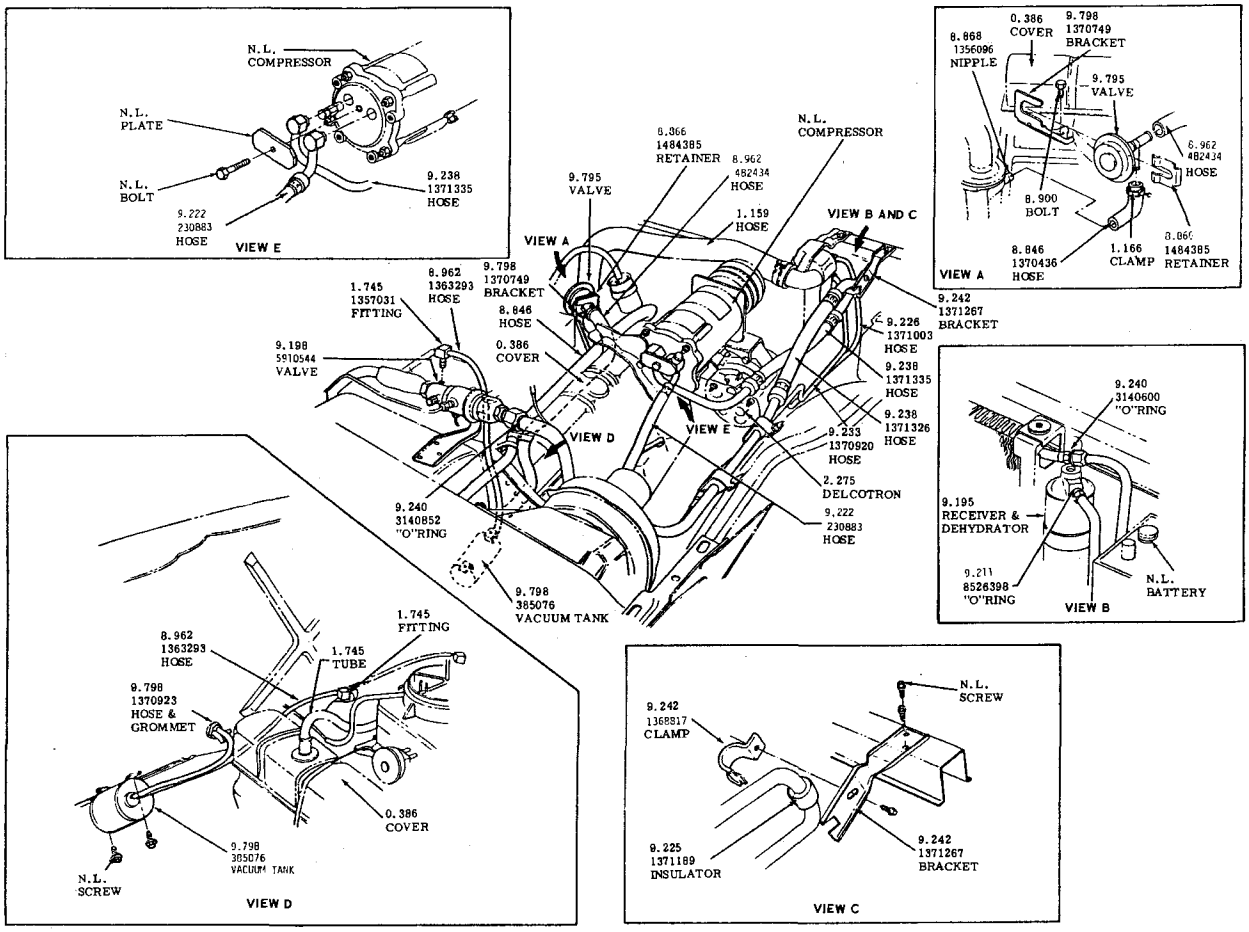

AIR CONDITIONING ENGINE COMPARTMENT UNITS
1965 LESABRE-WILDCAT-ELECTRA 225

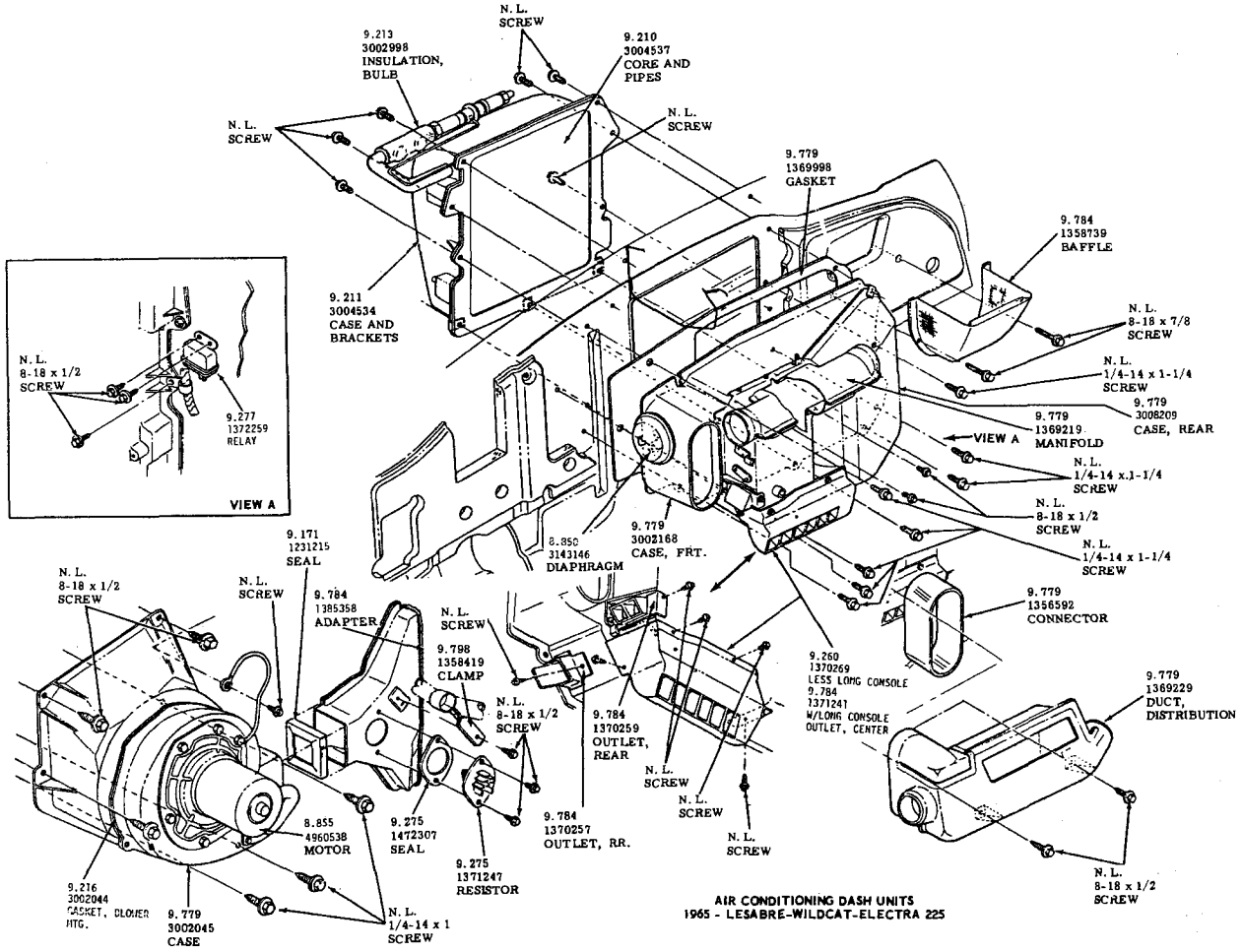

AIR CONDITIONING DASH UNITS
1965 - LESABRE-WILDCAT-ELECTRA 225

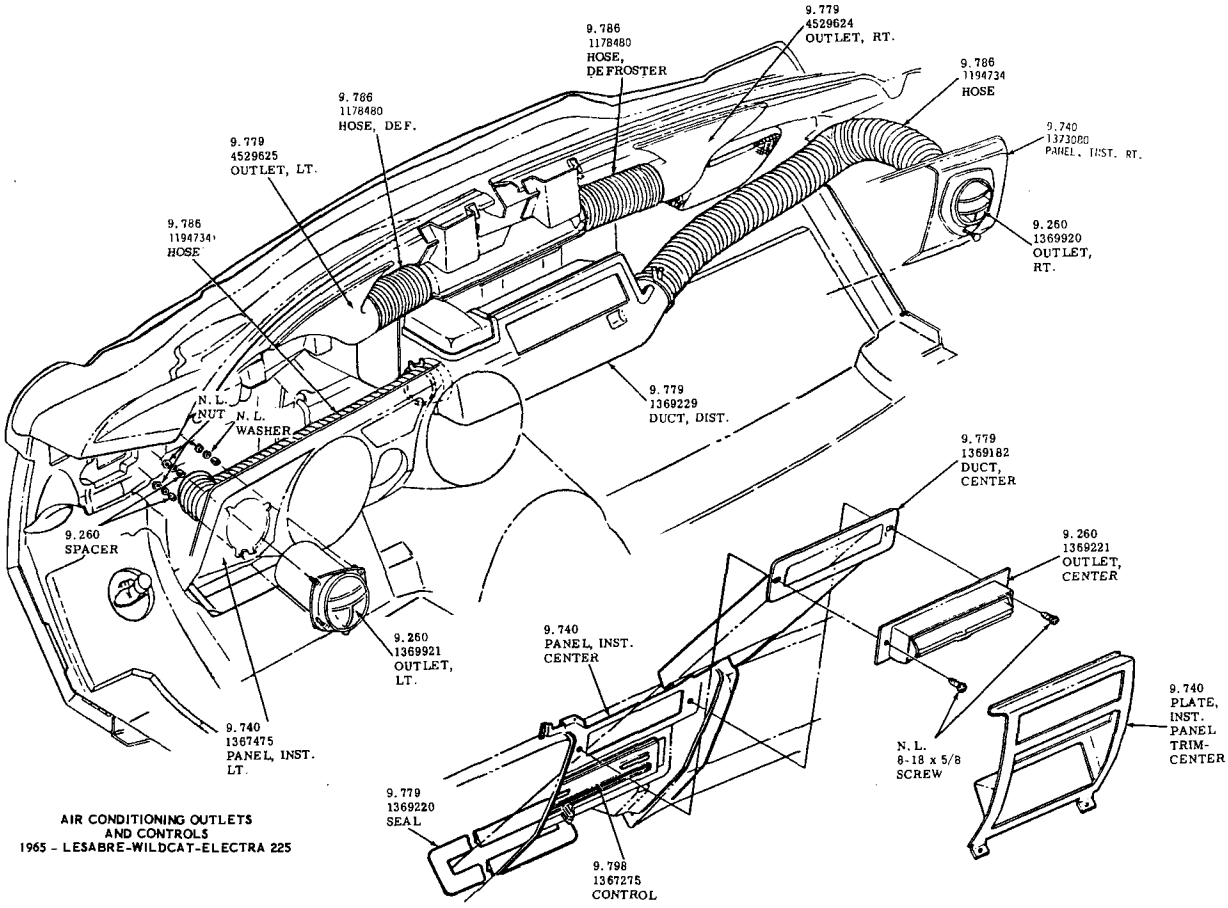

AIR CONDITIONING OUTLETS
AND CONTROLS
1965 - LESABRE-WILDCAT-ELECTRA 225

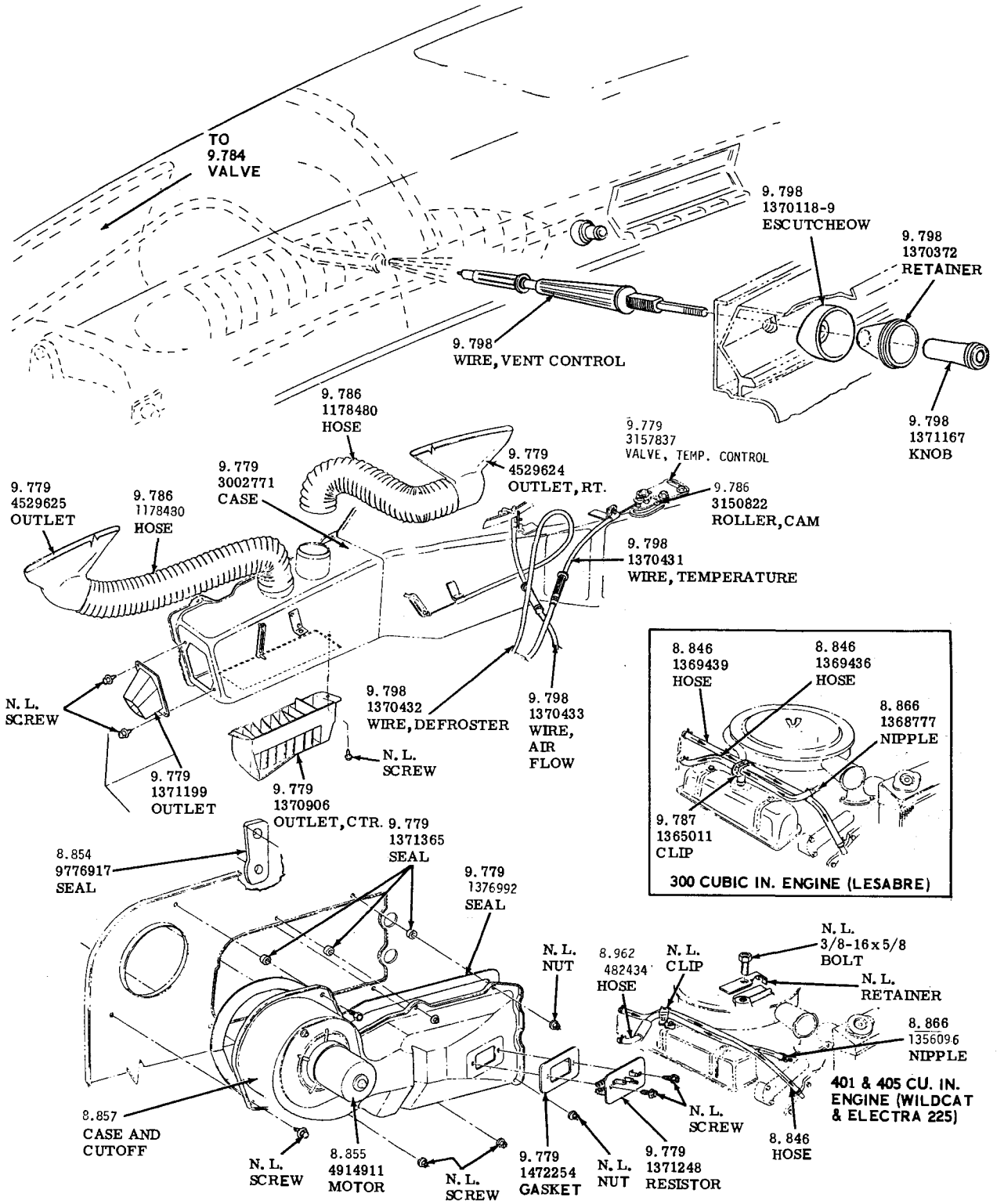

HEATER AND DEFROSTER
1965 LESABRE-WILDCAT-ELECTRA 225
(LESS AIR CONDITIONING)

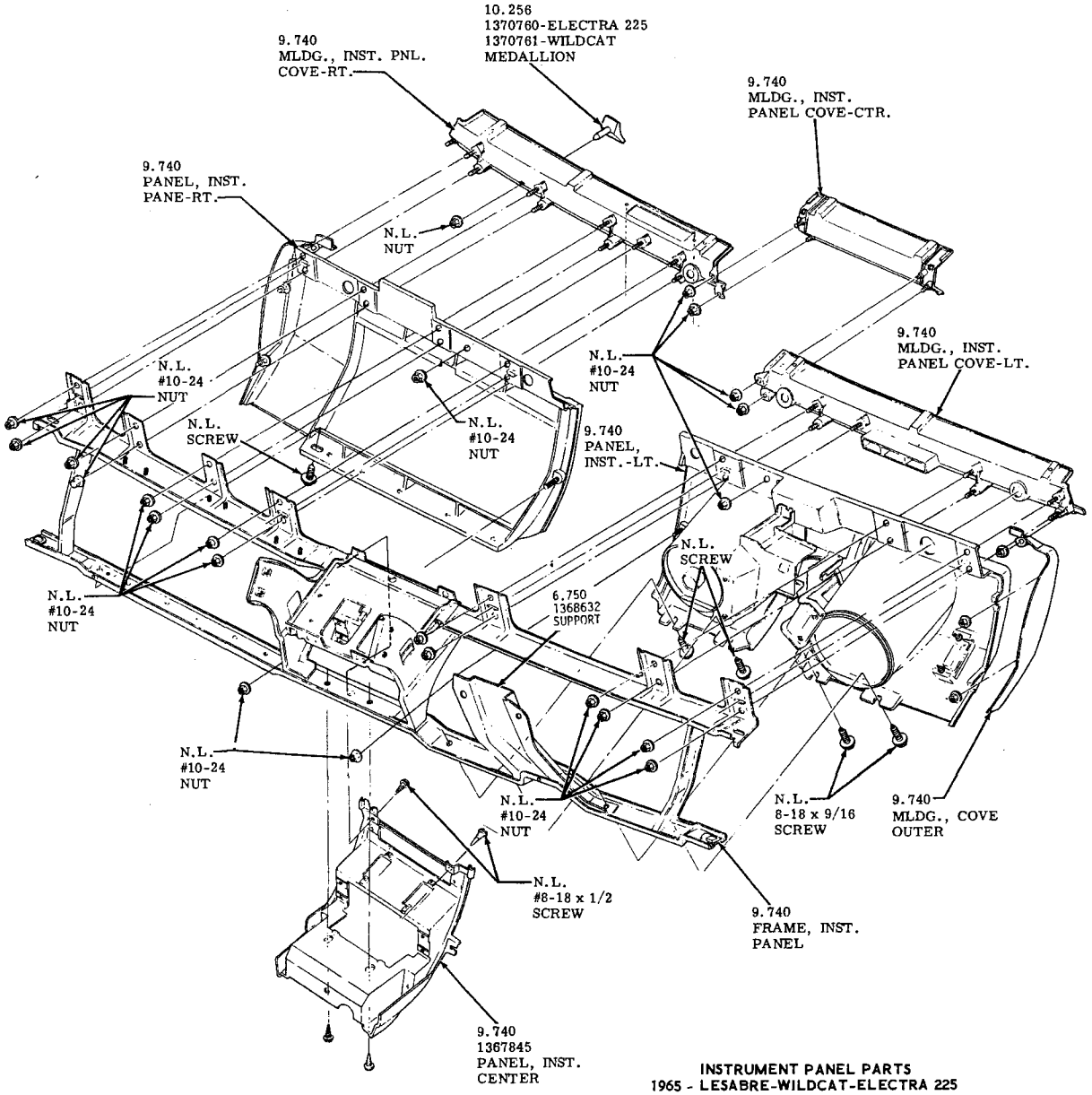

INSTRUMENT PANEL PARTS
1965 - LESABRE-WILDCAT-ELECTRA 225

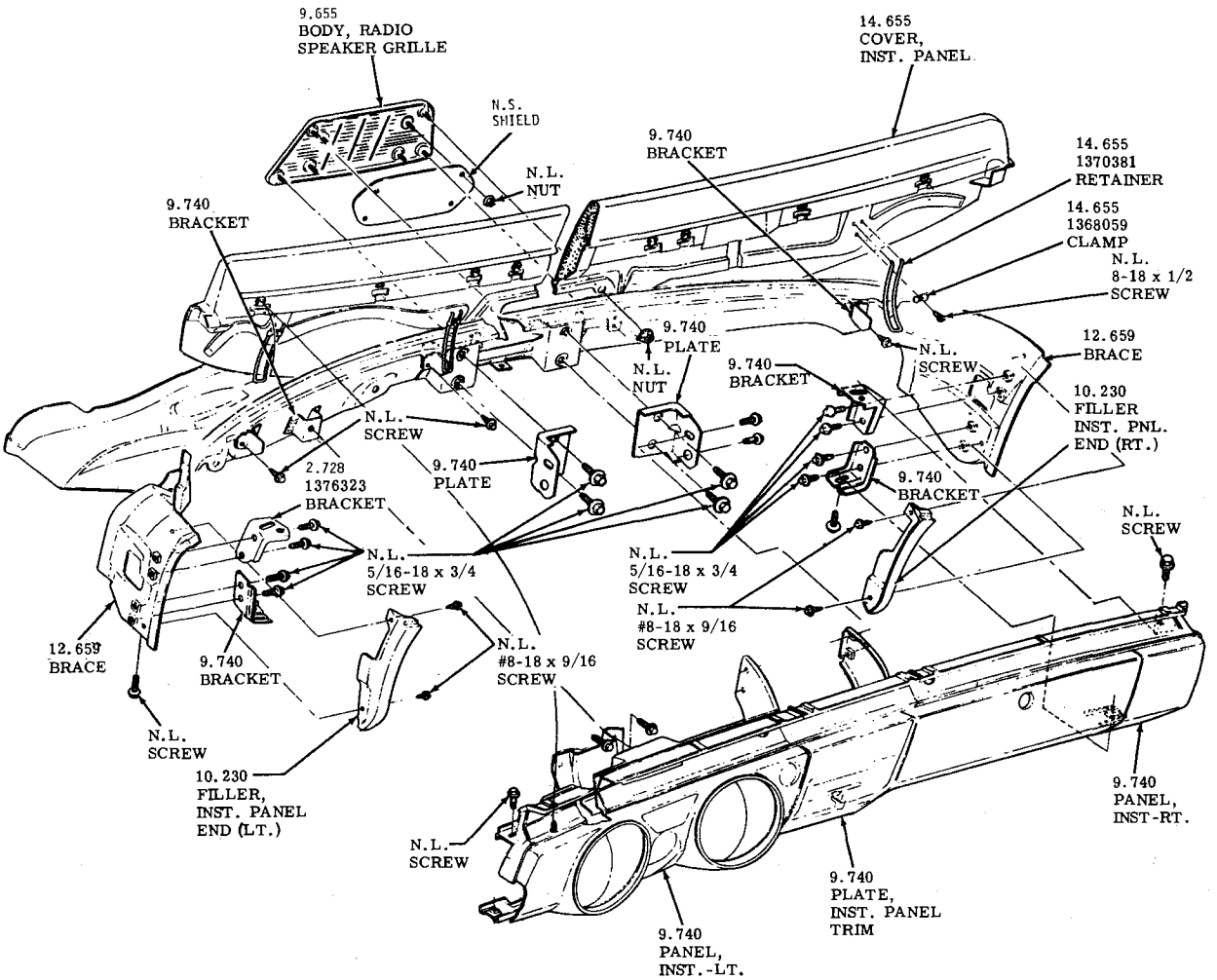

INSTRUMENT PANEL ATTACHING PARTS
AND INSTRUMENT PANEL COVER
1965 - LESABRE-WILDCAT-ELECTRA 225

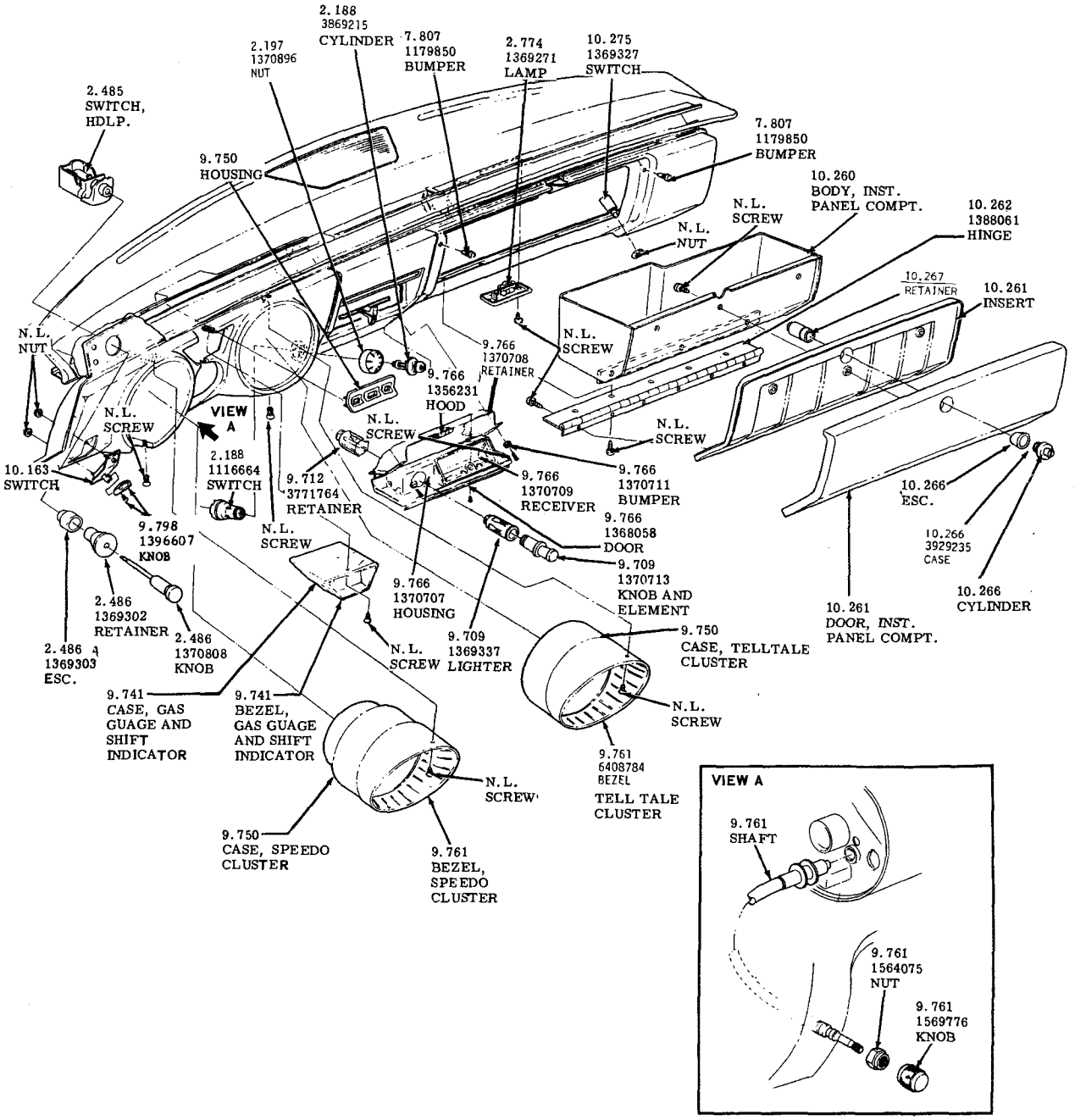

INSTRUMENT PANEL HARDWARE
1965 - LESABRE-WILDCAT-ELECTRA 225

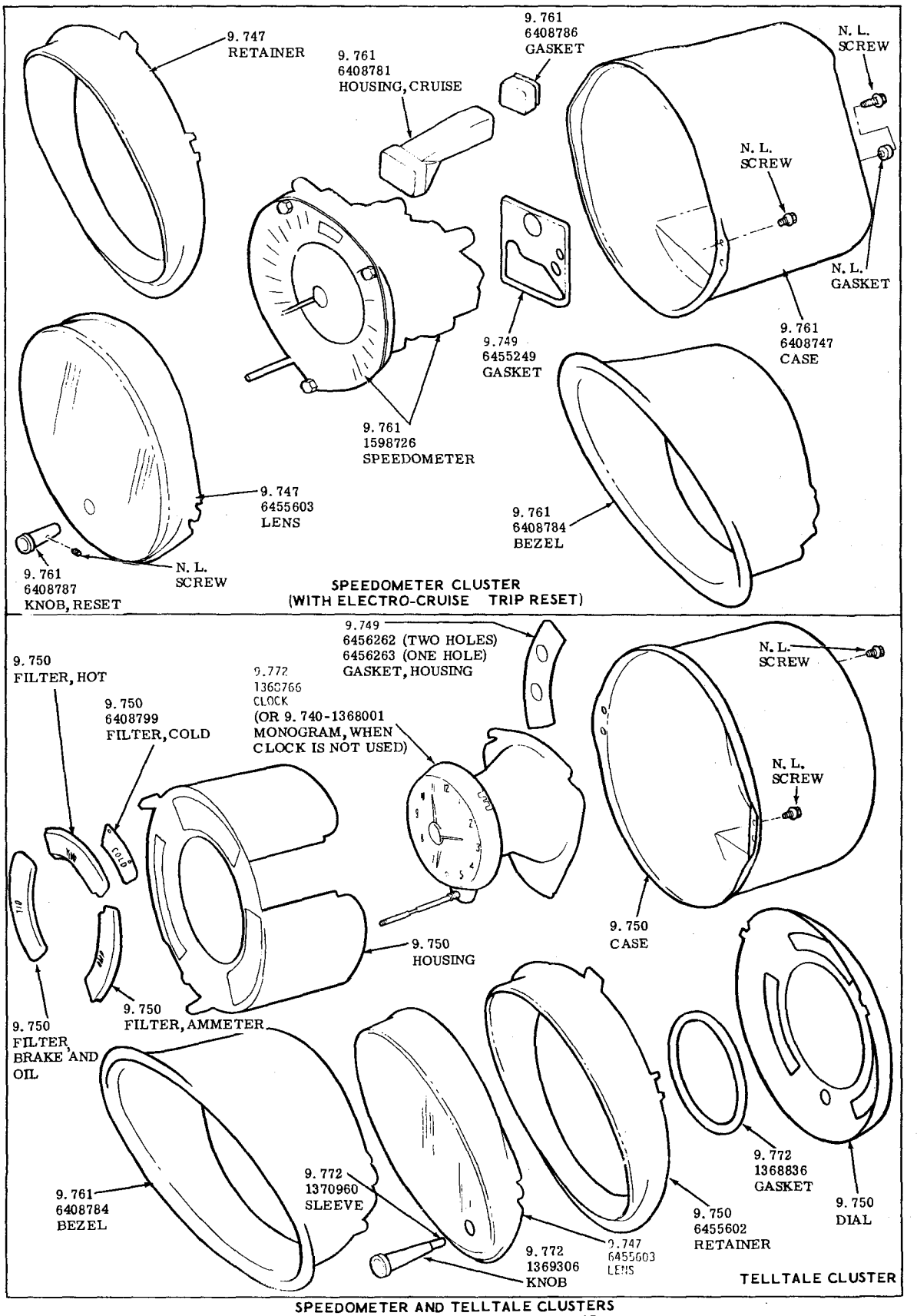

SPEEDOMETER AND TELLTALE CLUSTERS
1965-LESABRE-WILDCAT-ELECTRA 225

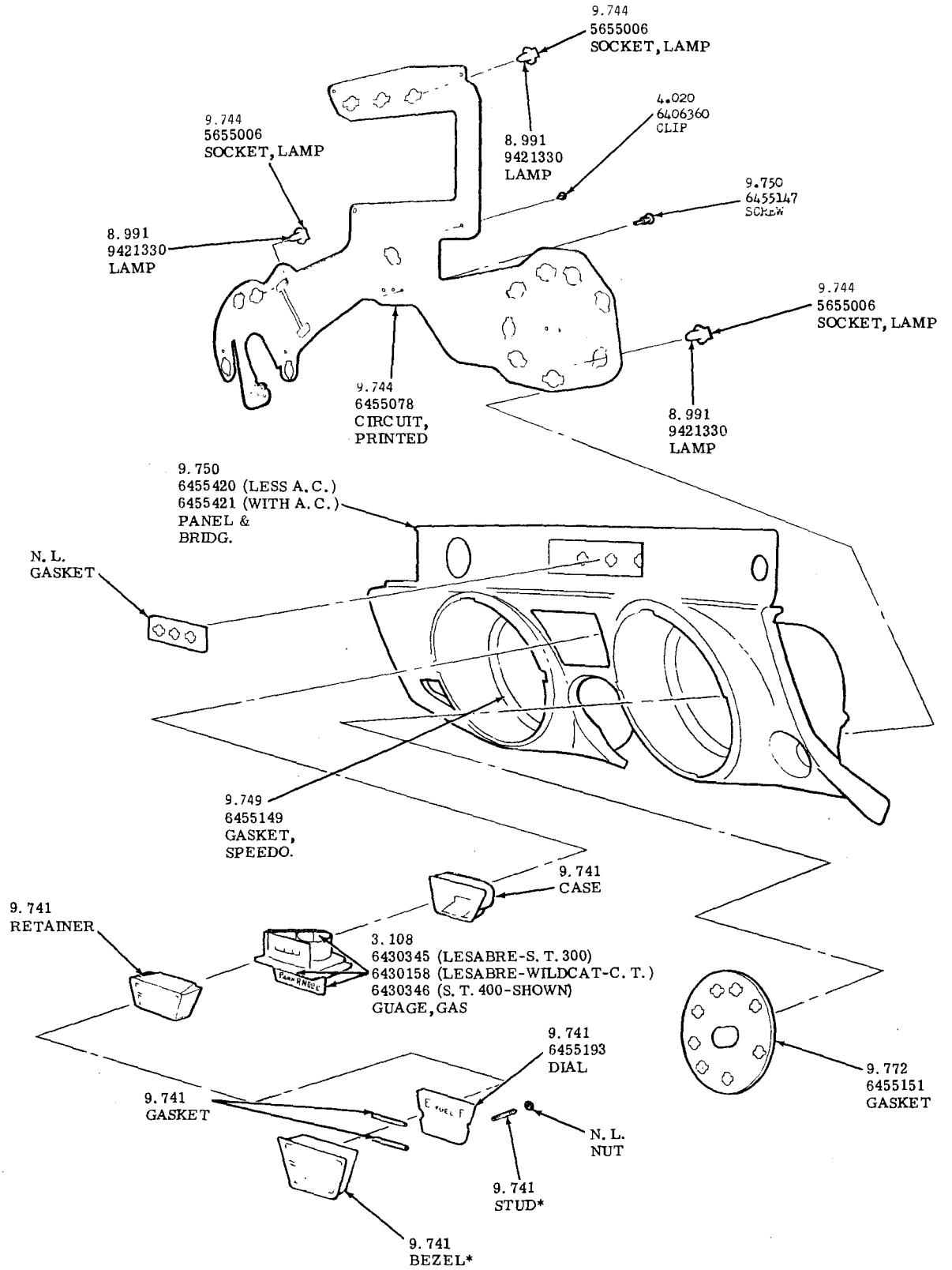

*NOTE: 9.741-6455190-BEZEL INCLUDES 2-9.741-6455192 STUD

GAS GUAGE, SHIFT INDICATOR
INS'T. PANEL AND CIRCUIT
1965-LESABRE-WILDCAT-ELECTRA 225

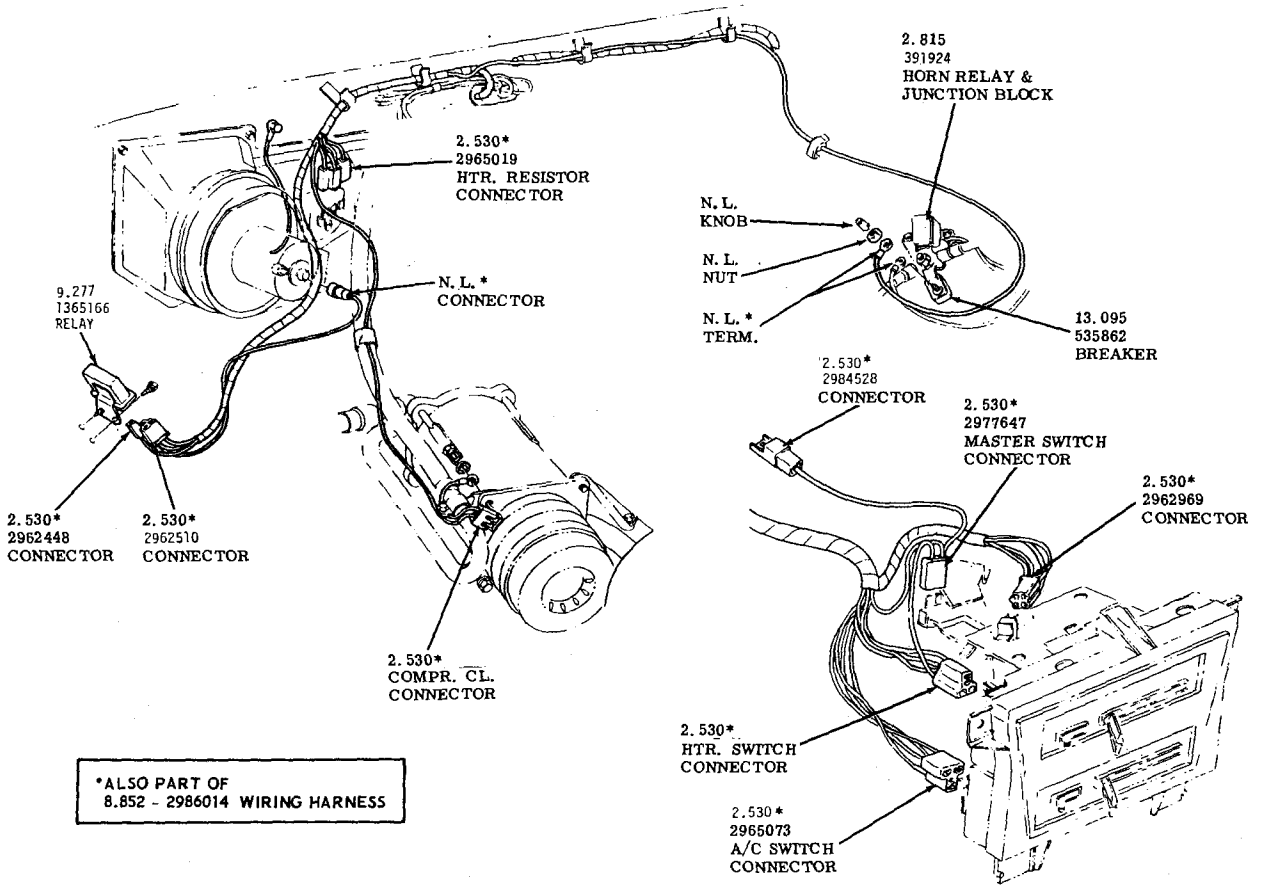

1965 RIVIERA AIR CONDITIONING WIRING HARNESS

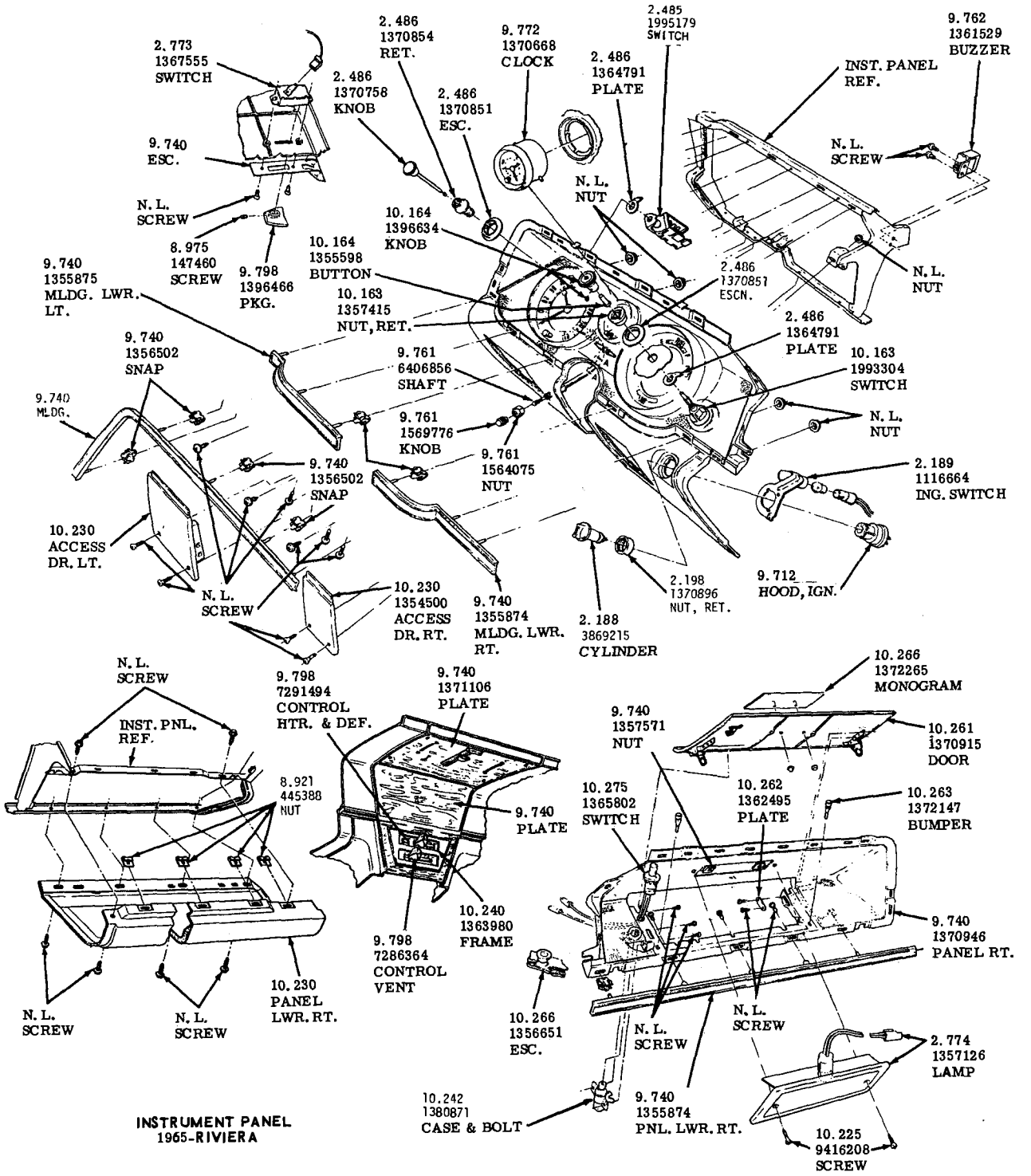

INSTRUMENT PANEL
1965-RIVIERA

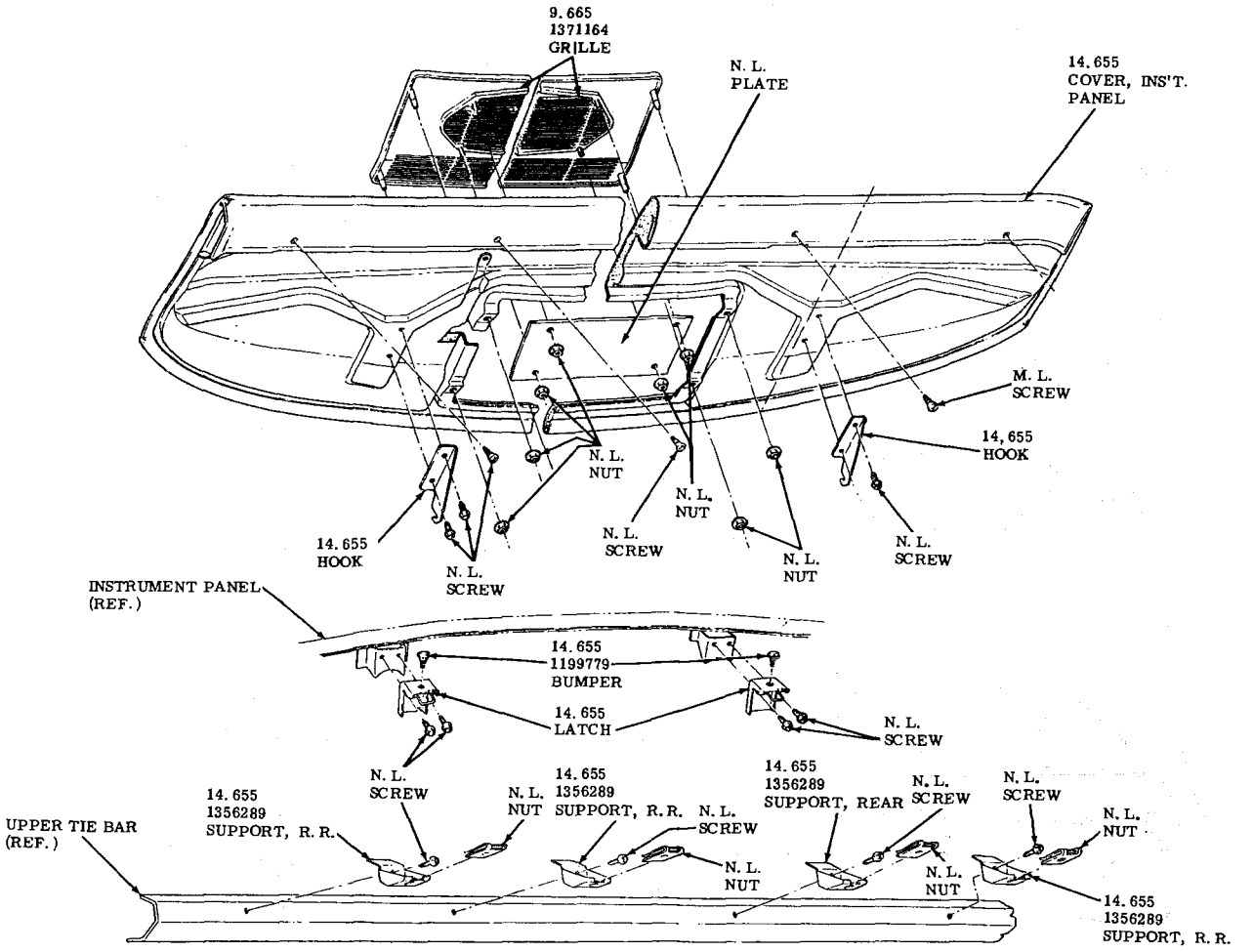

INSTRUMENT PANEL COVER
1965 - RIVIERA

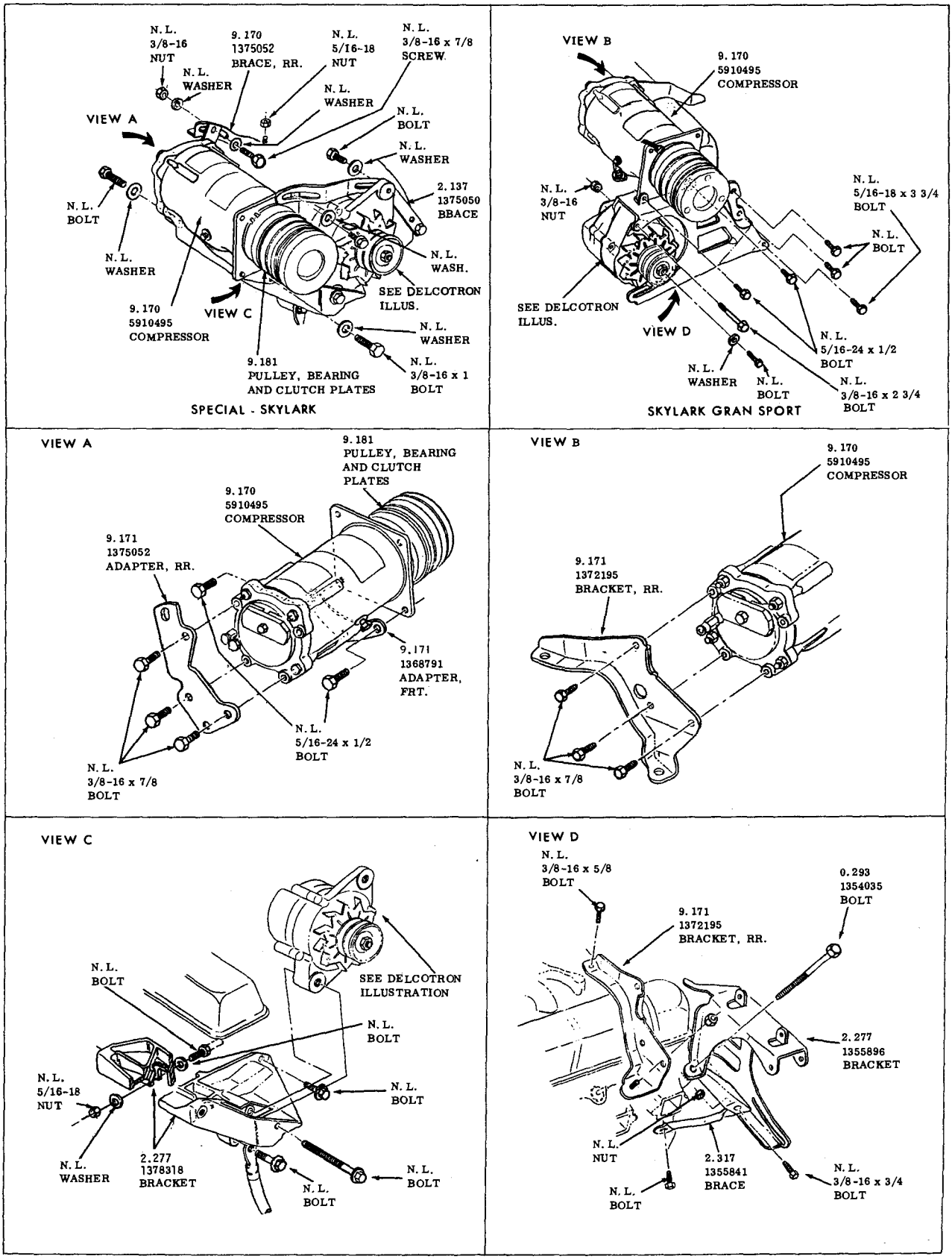

DELCOTRON AND COMPRESSOR MOUNTING
1966 - SPECIAL - SKYLARK - SKYLARK GRAN SPORT

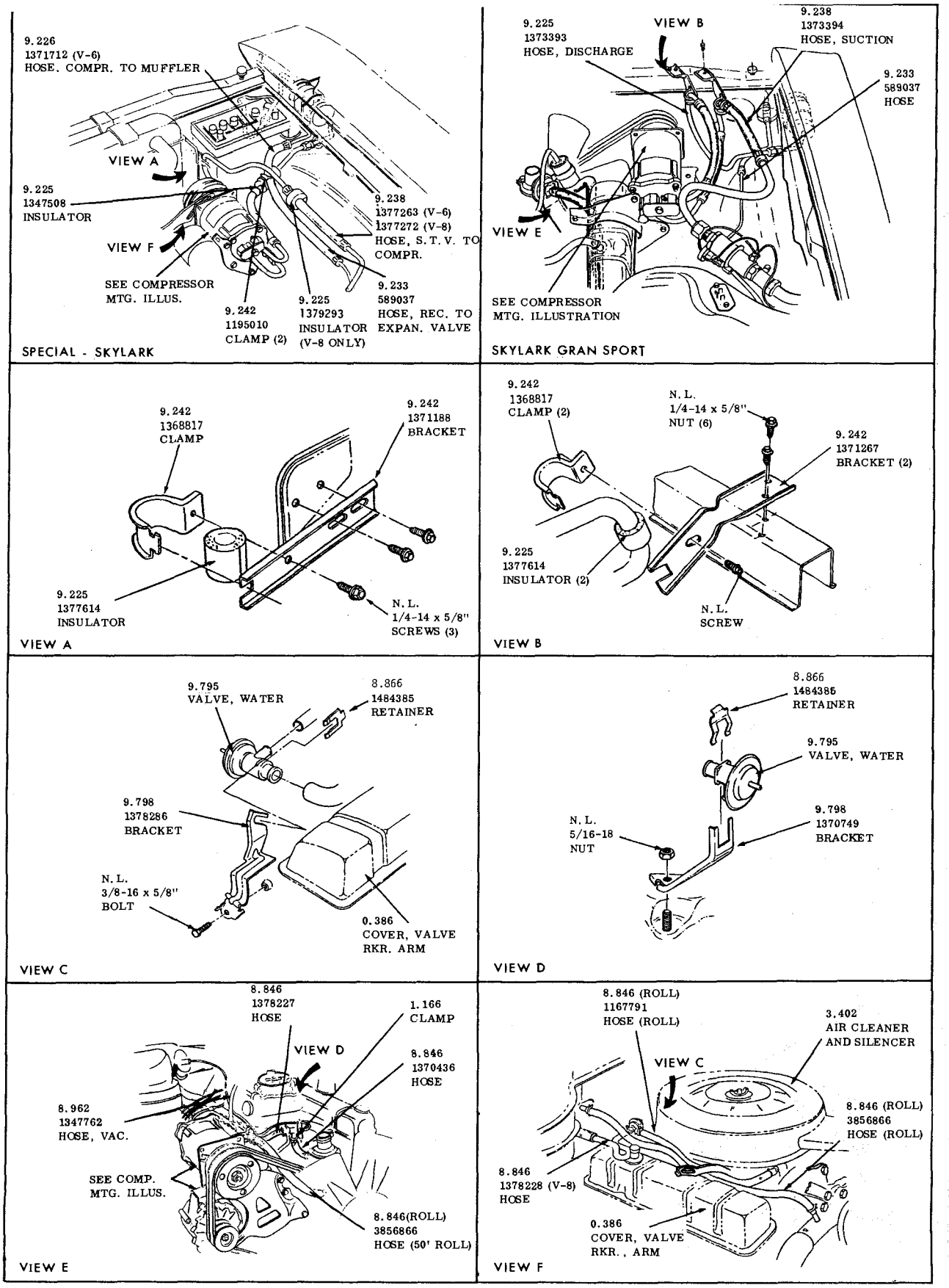

AIR CONDITIONING HOSES

1966 - SPECIAL -SKYLARK - SKYLARK GRAN SPORT

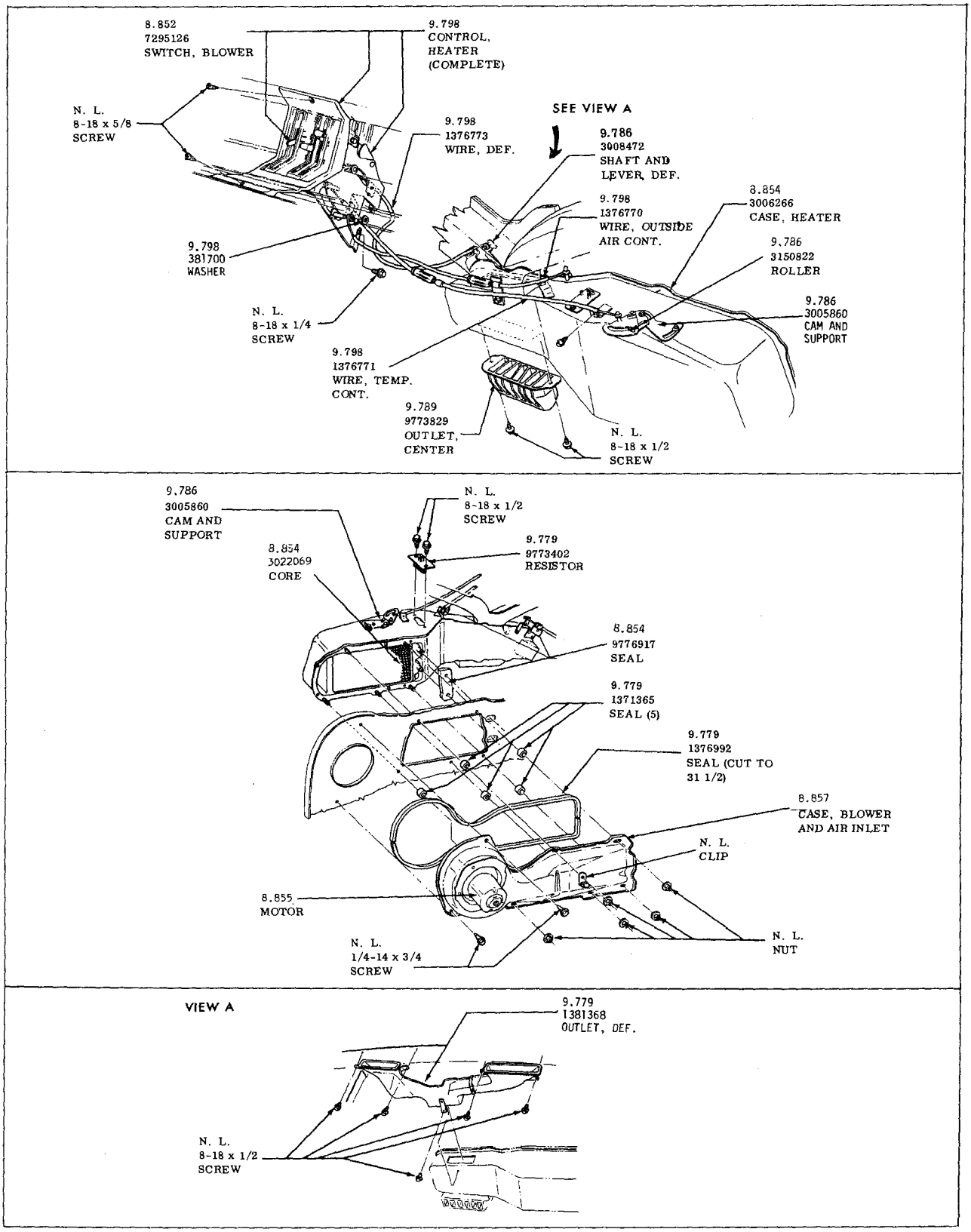

HEATER AND DEFROSTER
1966-1967 —SPECIAL—SKYLARK—SKYLARK GRAN SPORT

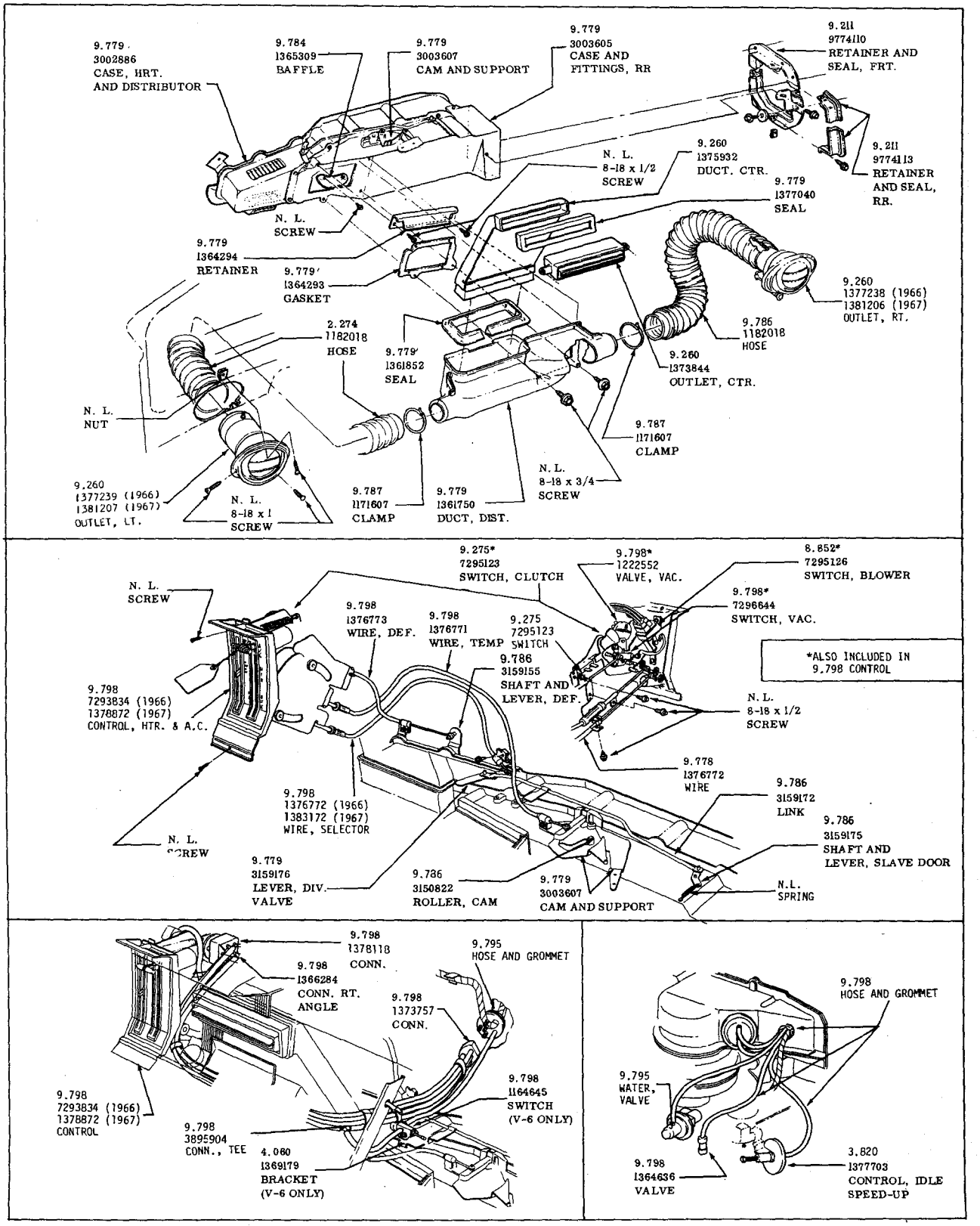

AIR CONDITIONING
INSTRUMENT PANEL UNITS
1966-1967 SPECIAL-SKYLARK-GRAN SPORT

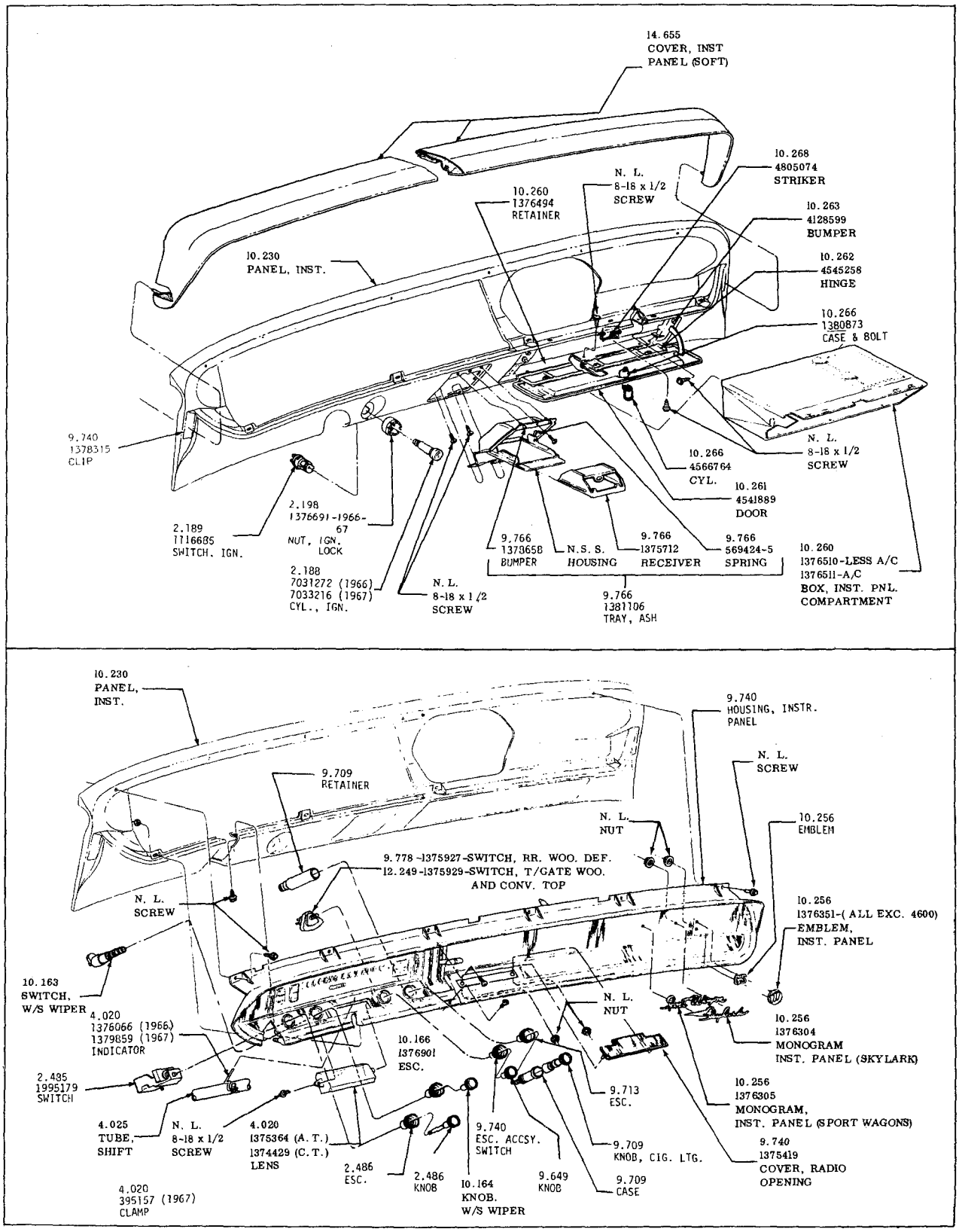

INSTRUMENT PANEL

1966-SPECIAL-SKYLARK-GRAN SPORT

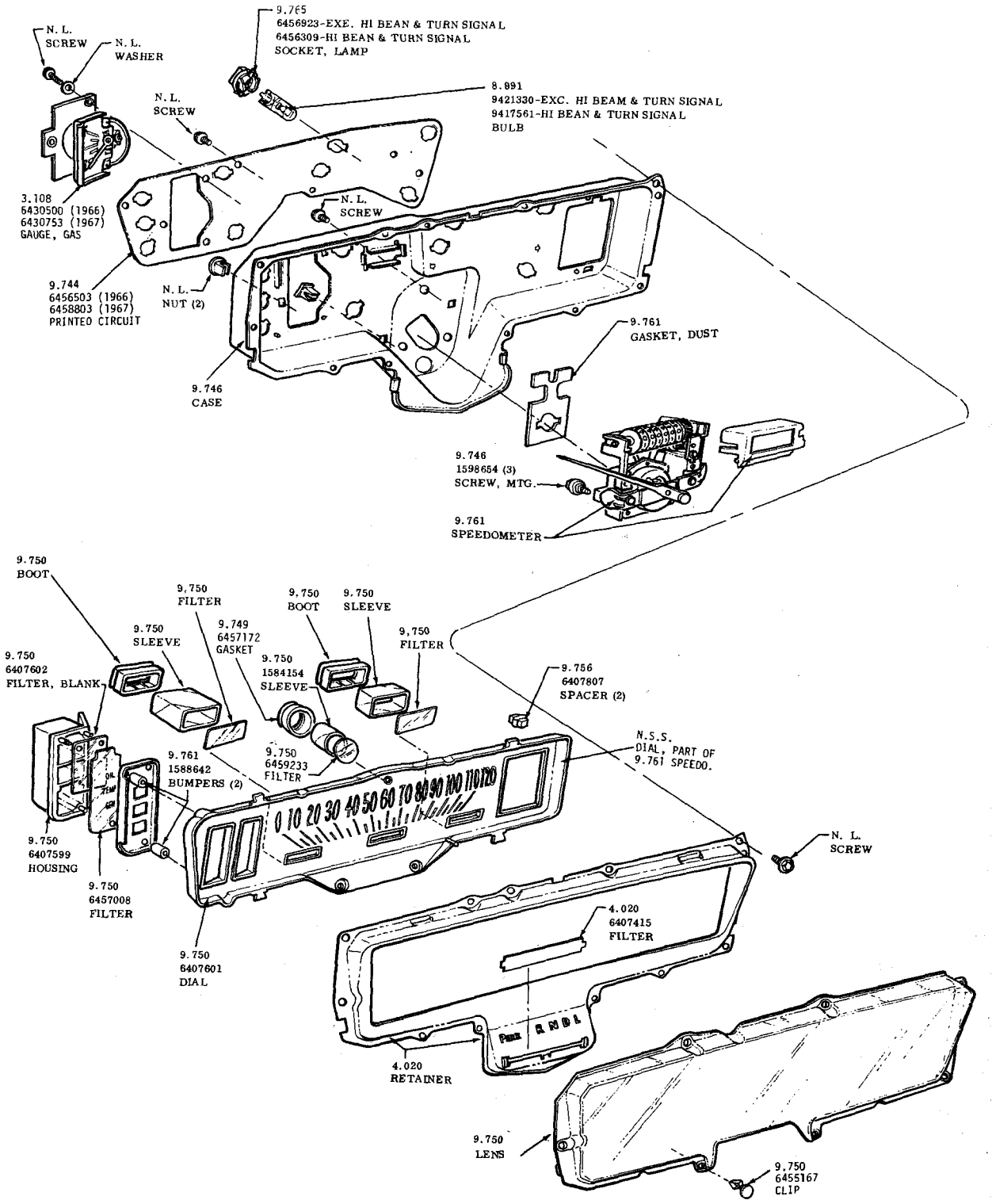

INSTRUMENT CLUSTER
1966-1967 - SPECIAL - SKYLARK - SKYLARK GRAN SPORT

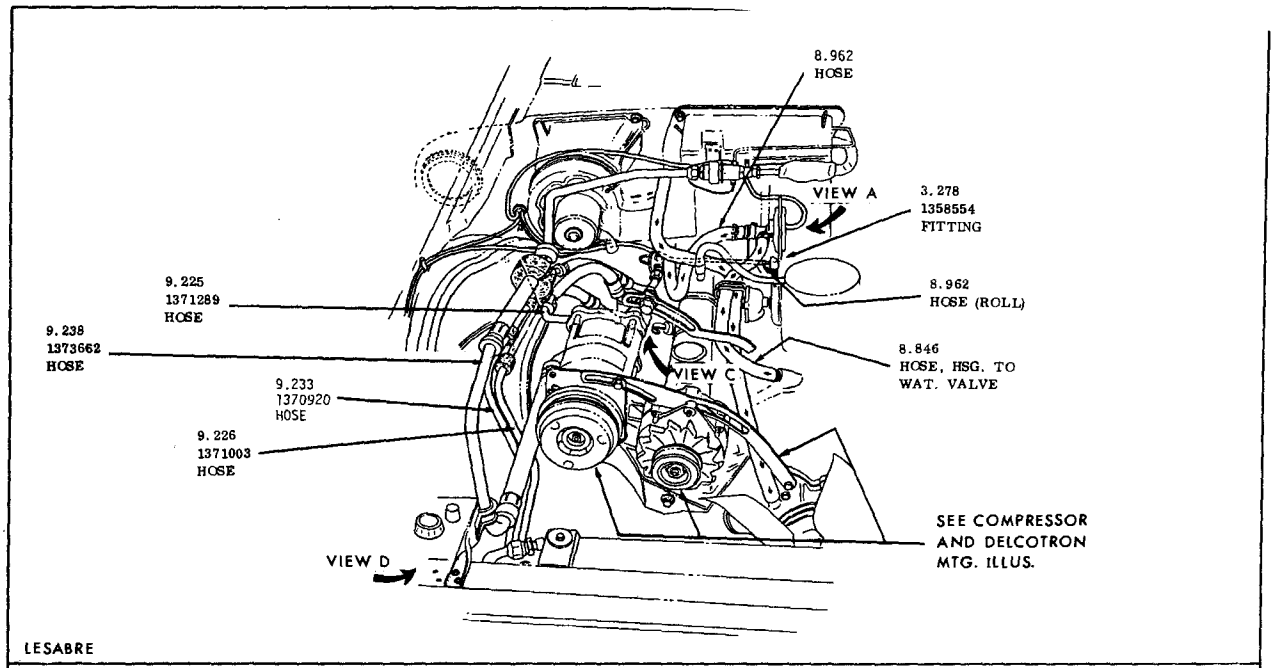

LESABRE

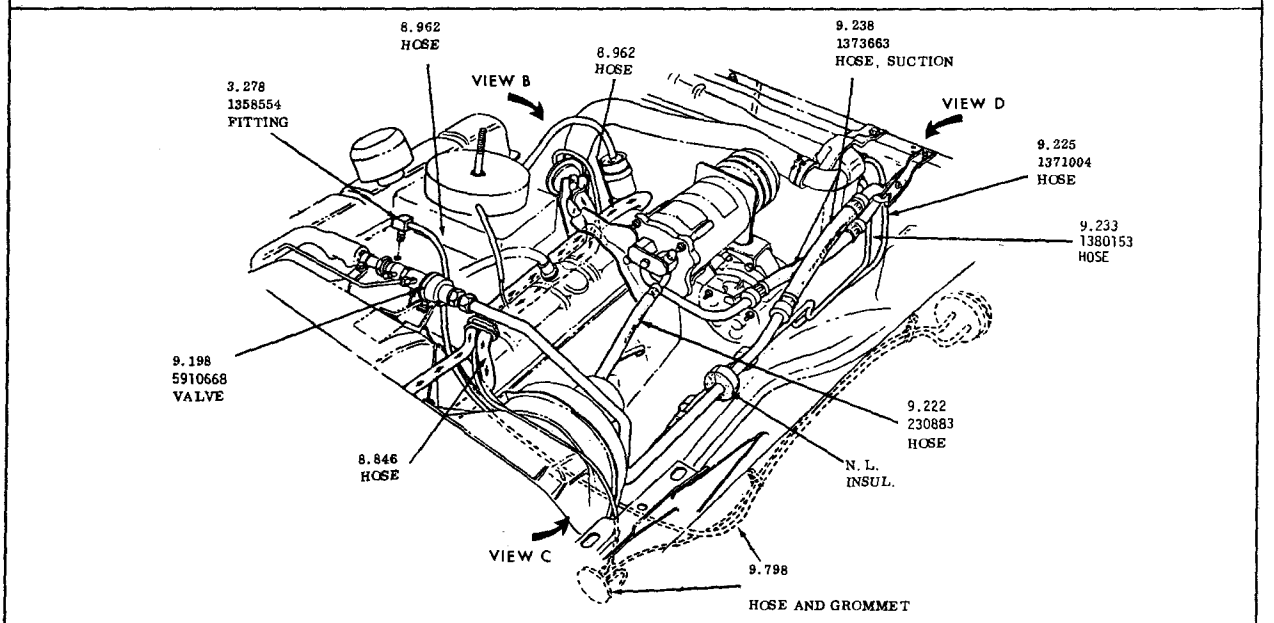

WILDCAT - ELECTRA 225

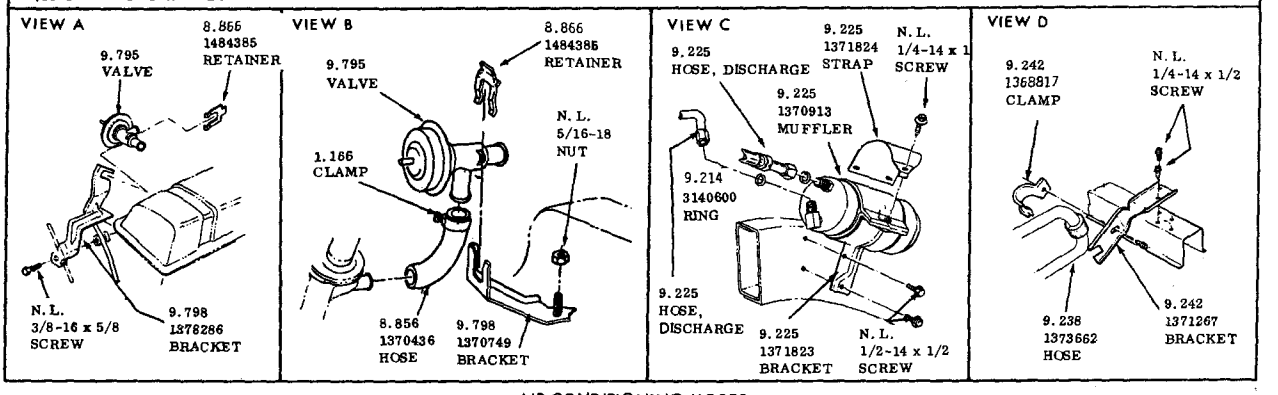

AIR CONDITIONING HOSES
1966 - LESABRE - WILDCAT - ELECTRA 225

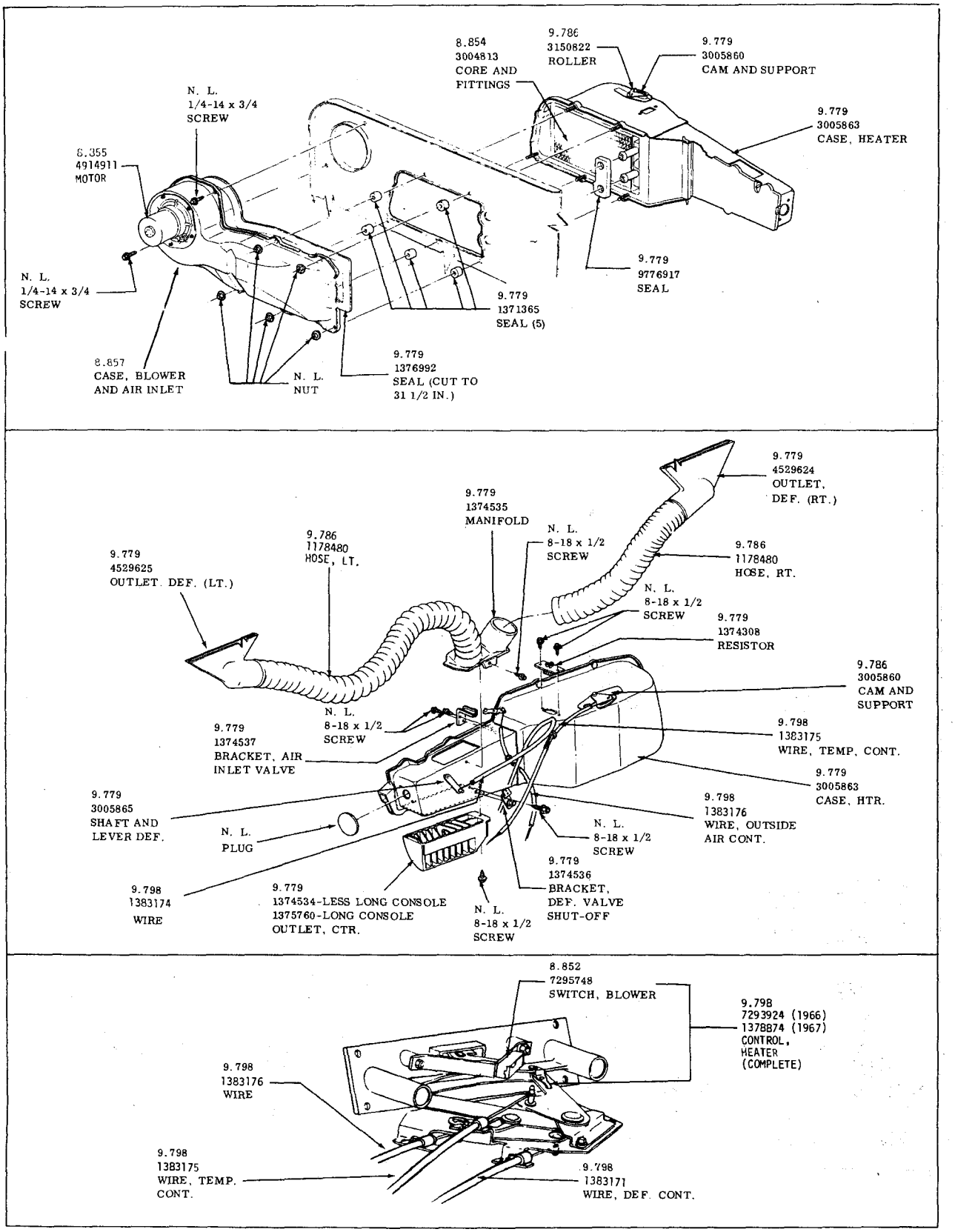

HEATER AND CONTROLS

1966—LE SABRE, WILDCAT, ELECTRA 225

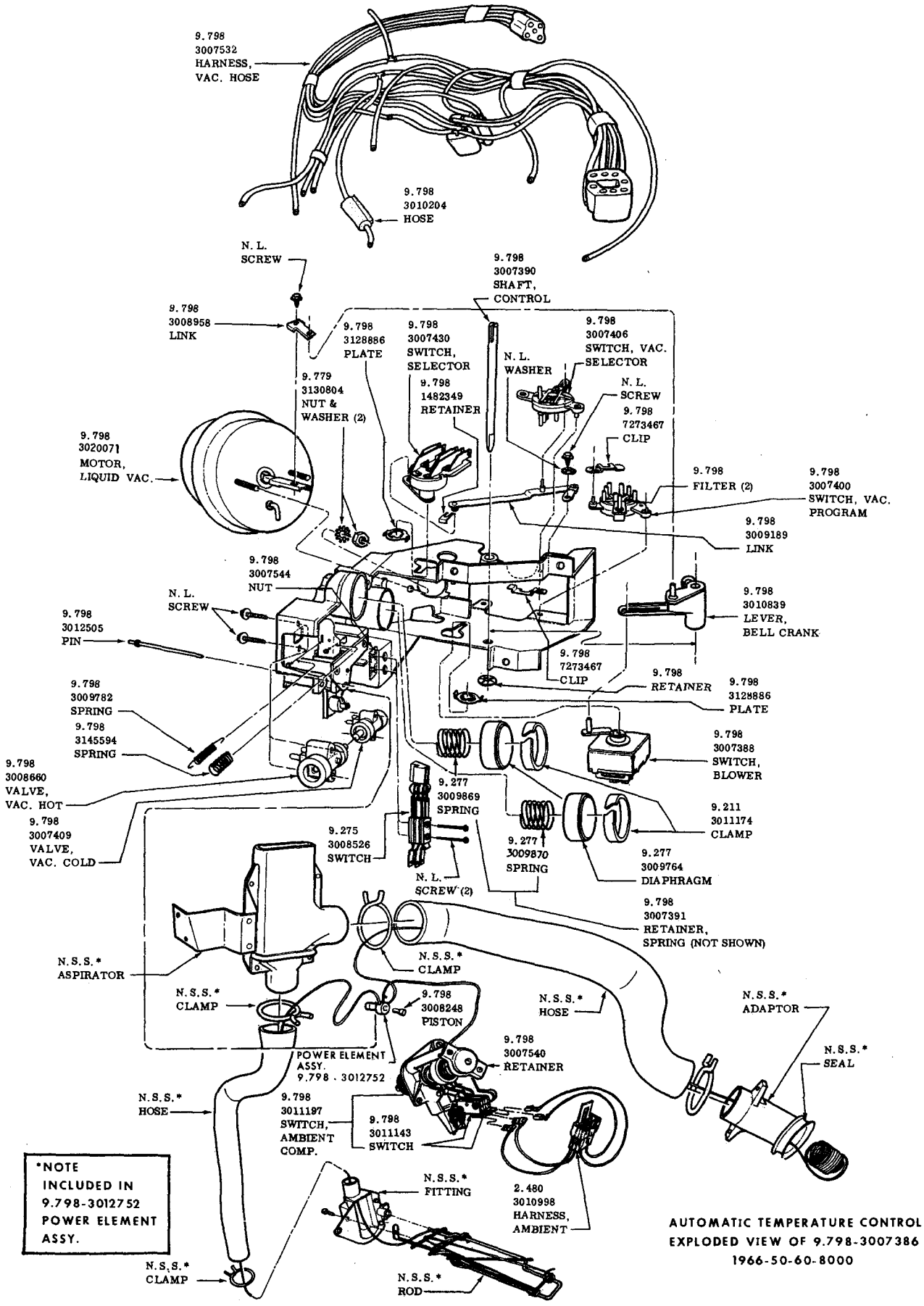

AUTOMATIC TEMPERATURE CONTROL
EXPLODED VIEW OF 9.798-3007386
1966-50-60-8000

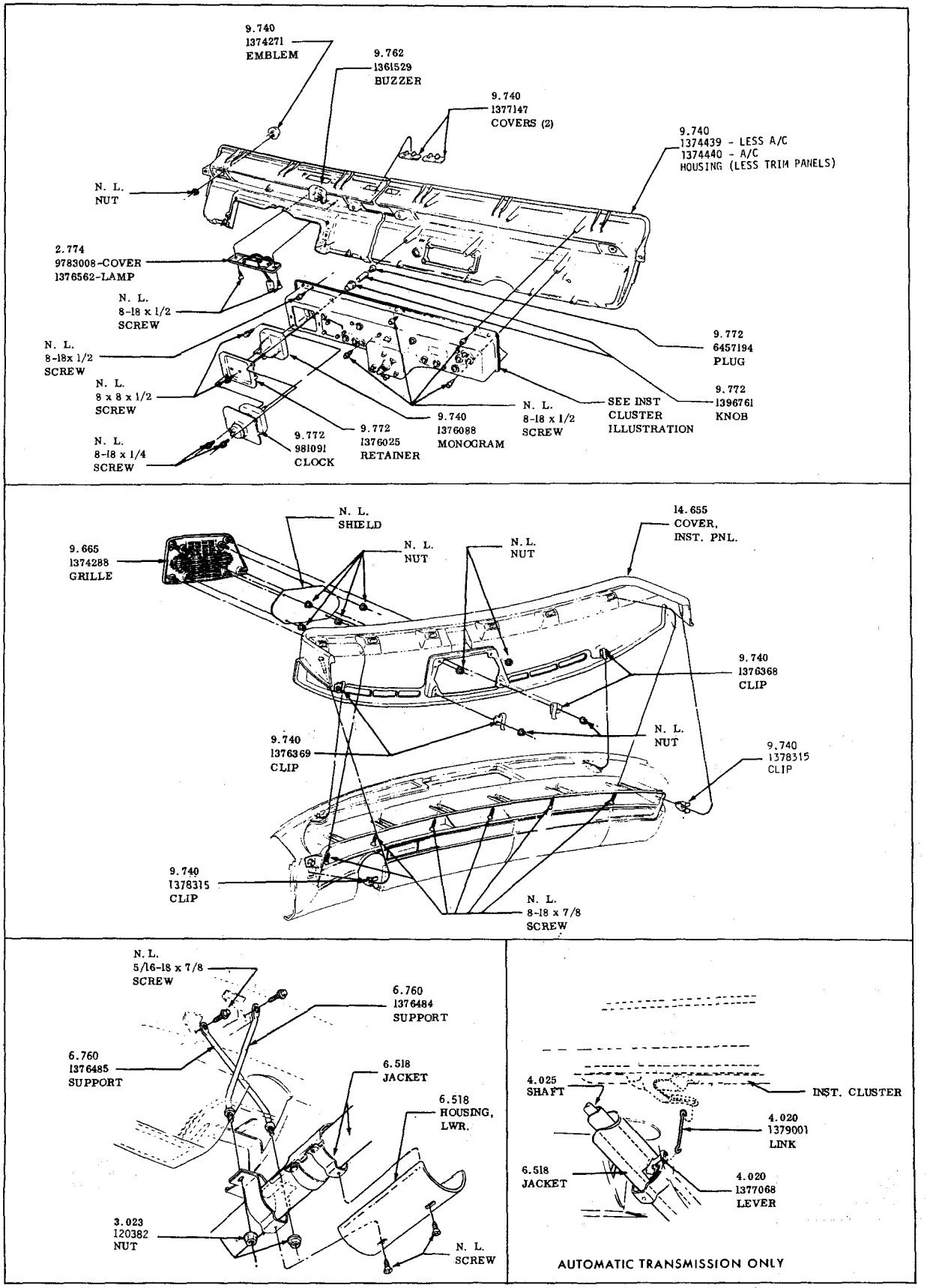

INSTRUMENT PANEL COVER AND HARDWARE
1966-LE SABRE-WILDCAT-ELECTRA 225

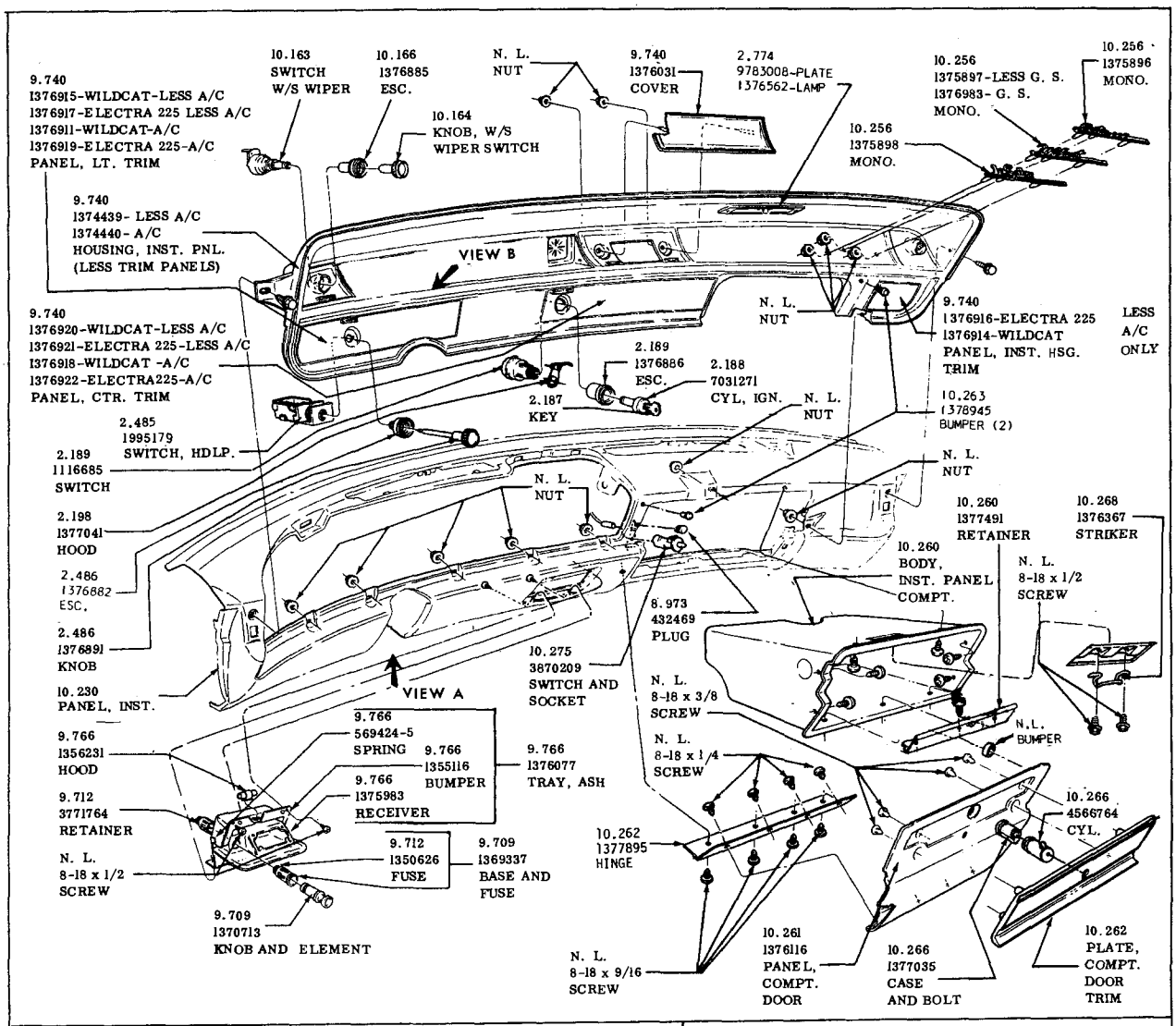

INSTRUMENT PANEL
1966-LE SABRE-WILDCAT ELECTRA 225

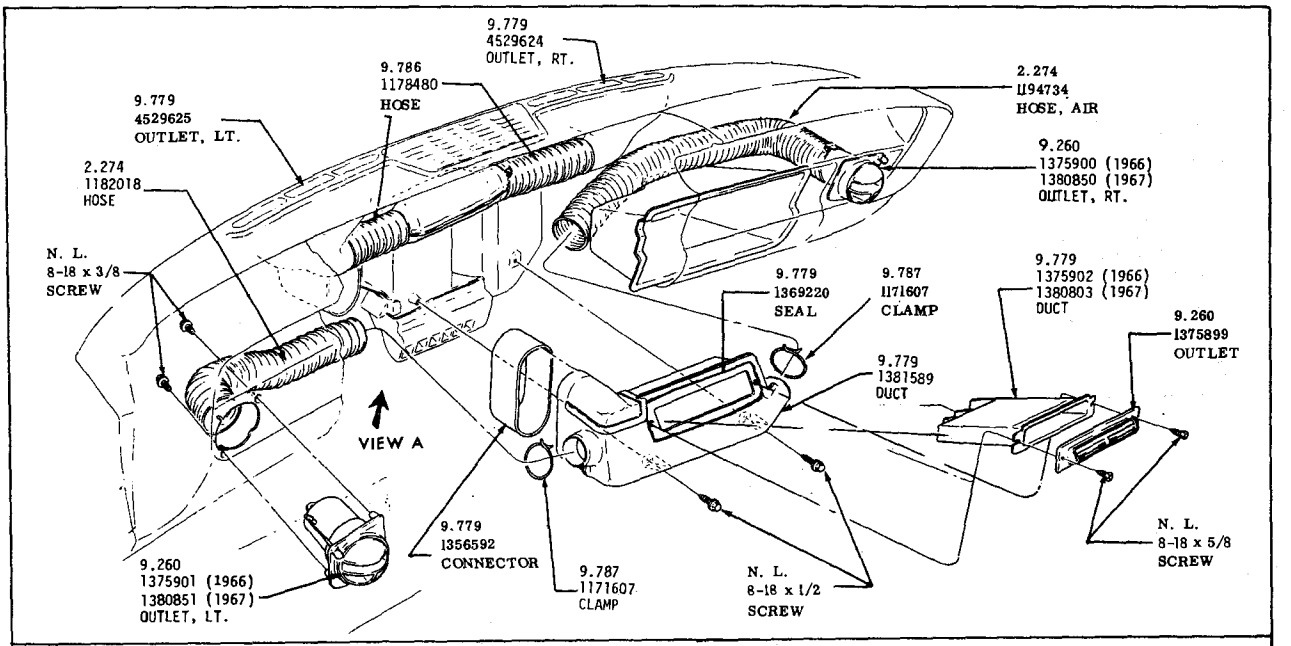

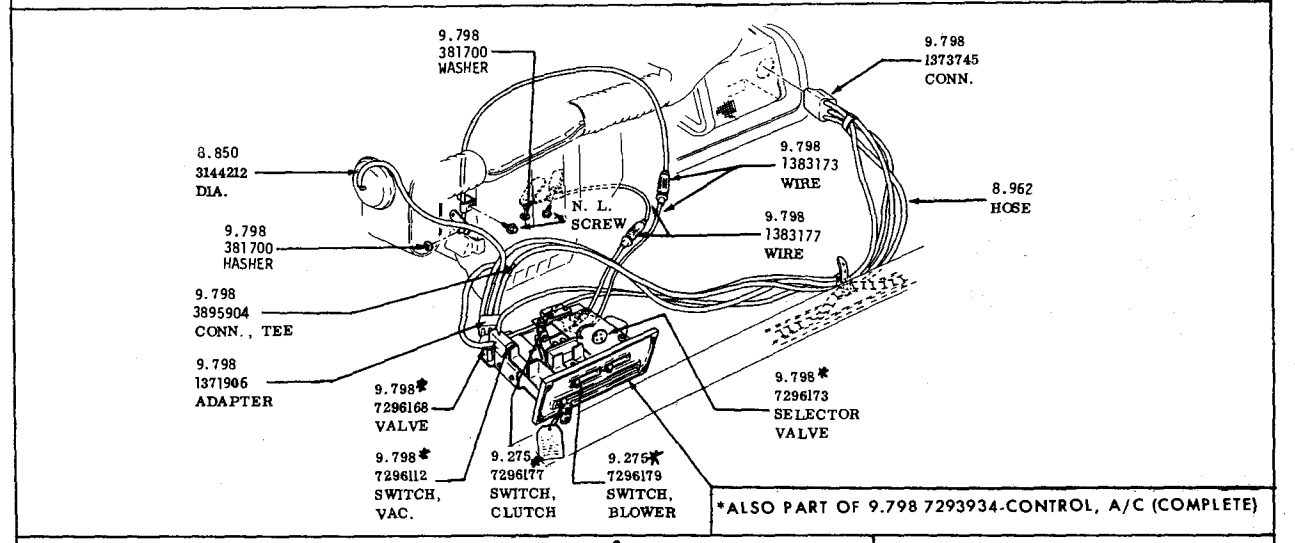

*ALSO PART OF 9.798 7293934-CONTROL, A/C (COMPLETE)

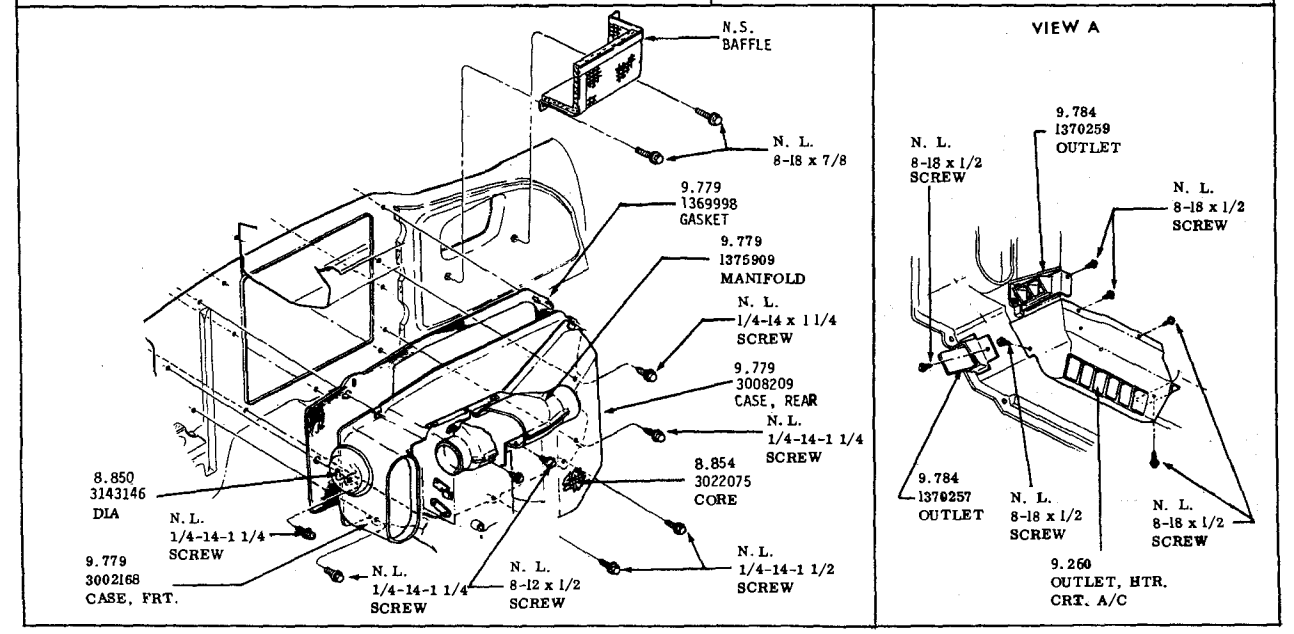

INSTRUMENT PANEL UNITS
1966-1967 -LE SABRE-WILDCAT- ELECTRA 225
AIR CONDITIONING

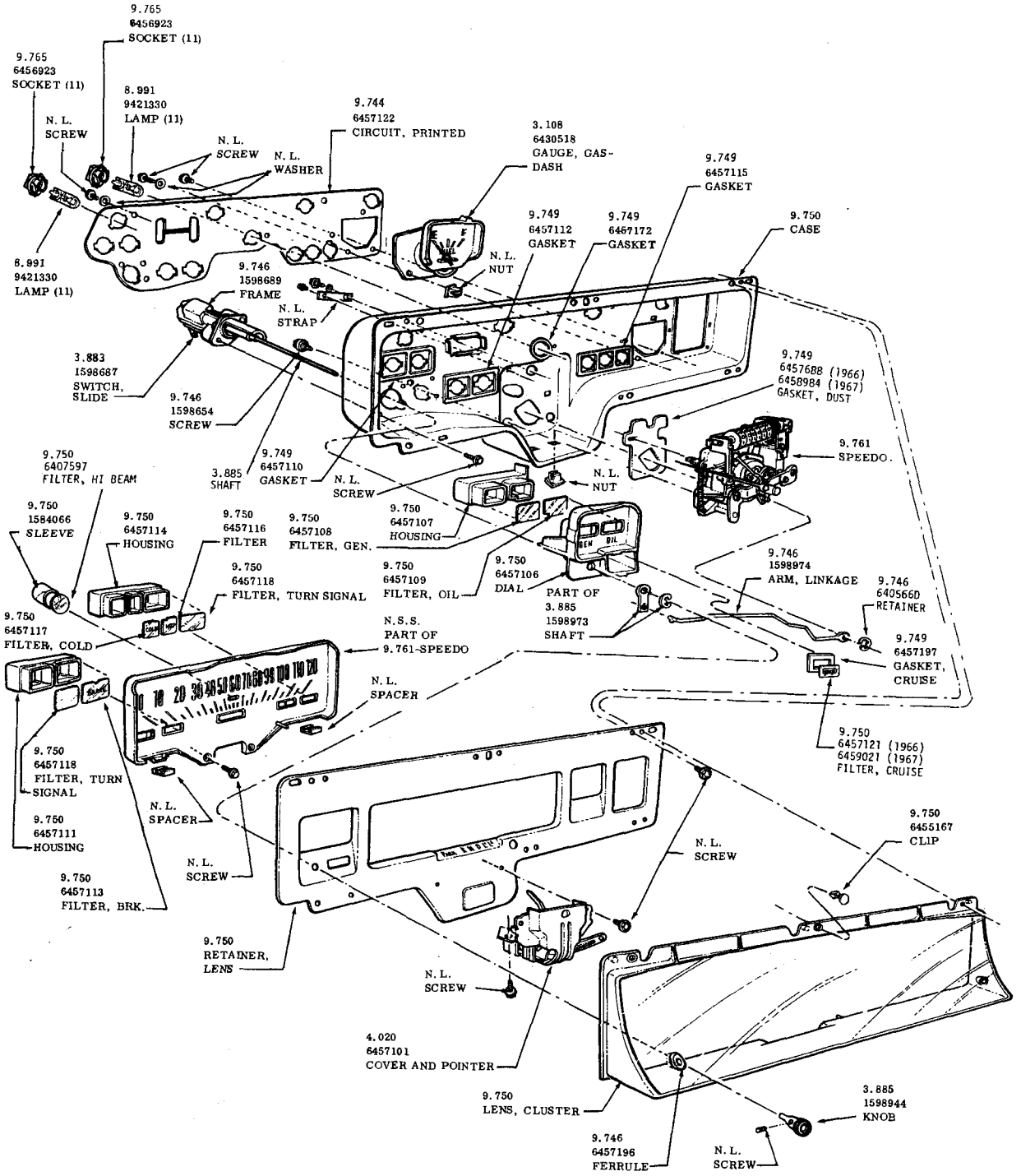

INSTRUMENT CLUSTER
1966-1967 - LESABRE - WILDCAT - ELECTRA 225
(WITH A. T. AND CRUISE CONTROL)

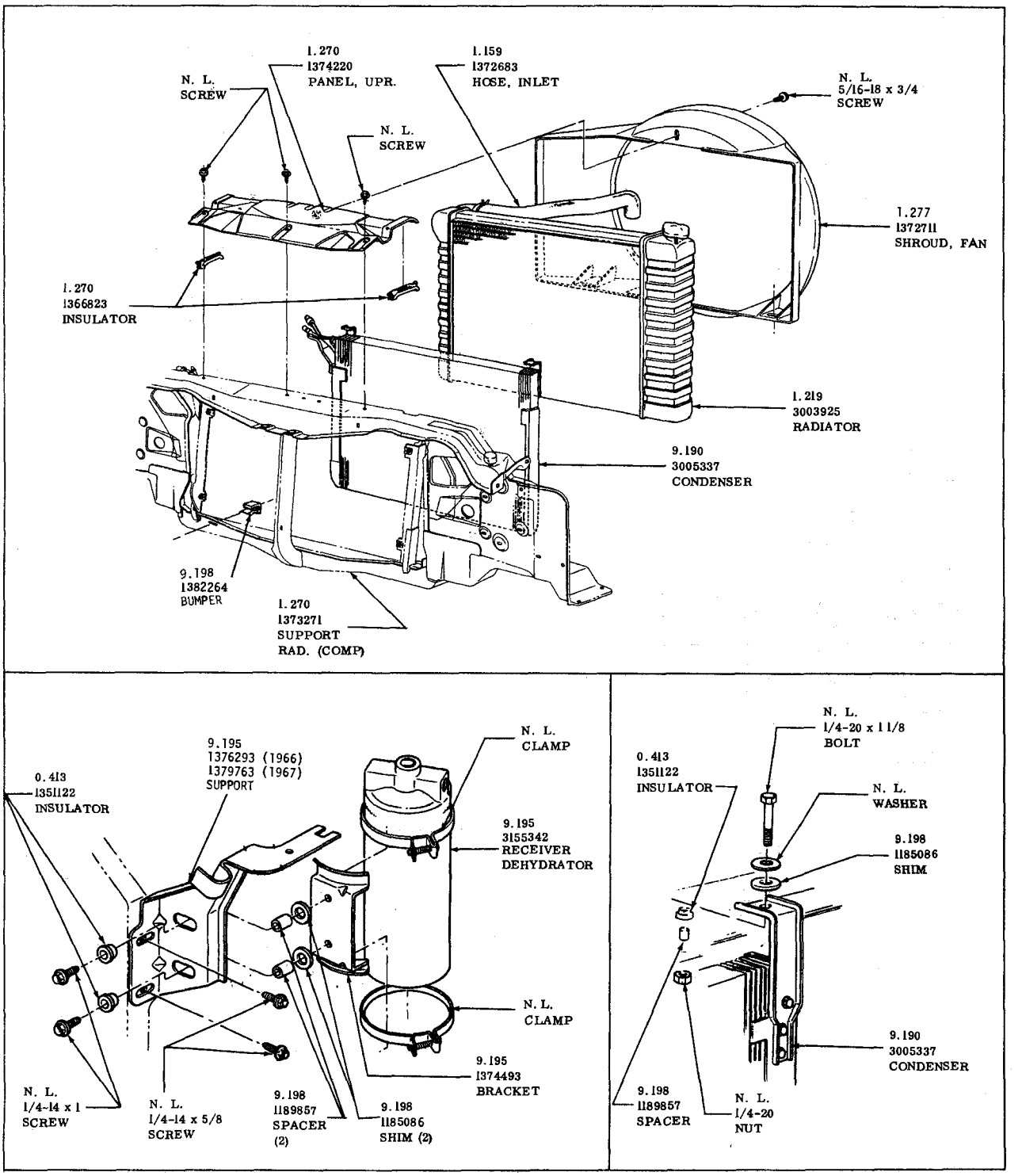

ENGINE COMPARTMENT UNITS
FACTORY INSTALLED AIR COND.
1966-1967 -RIVIERA

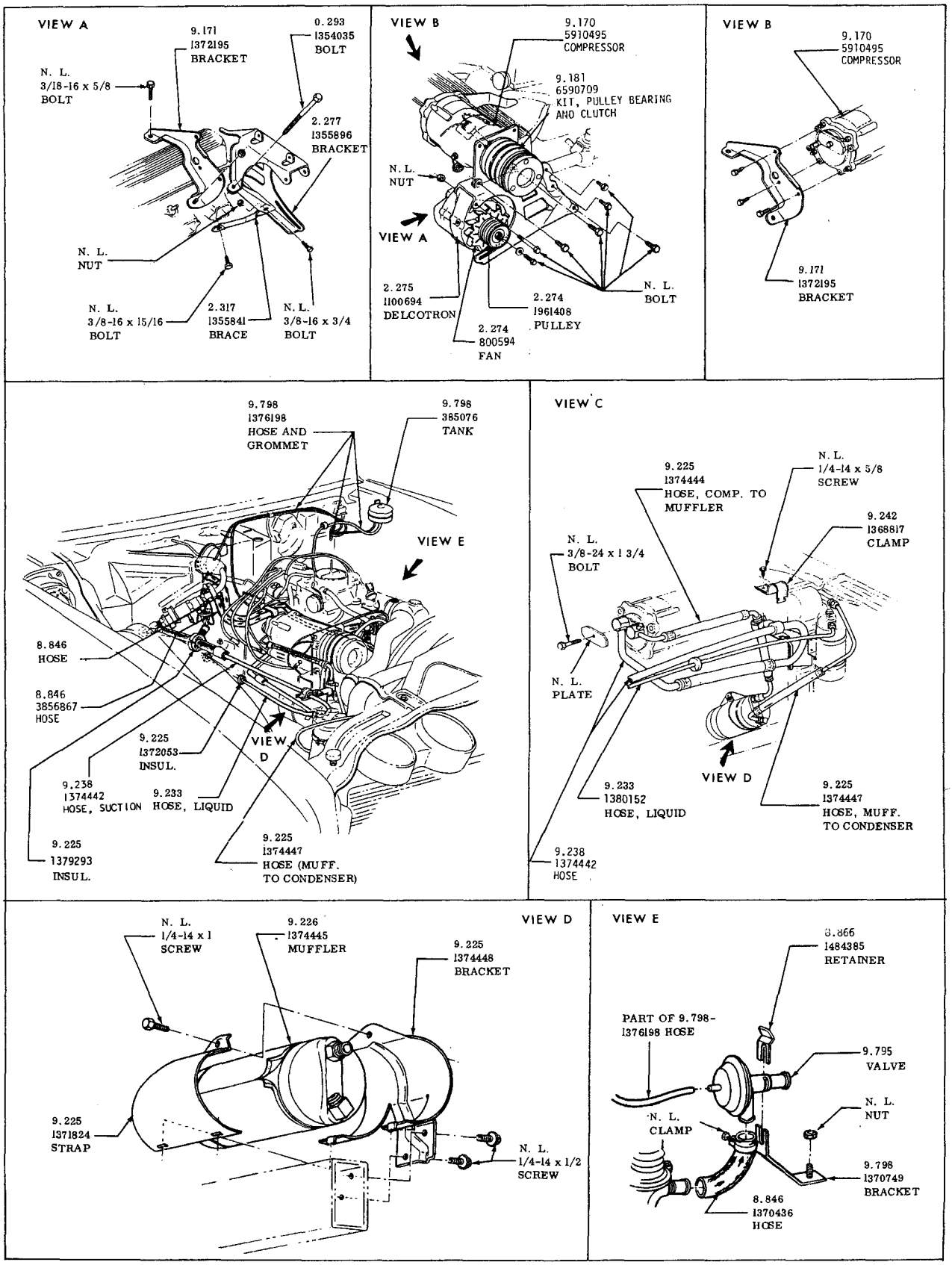

AIR CONDITIONING HOSES
1966-RIVIERA

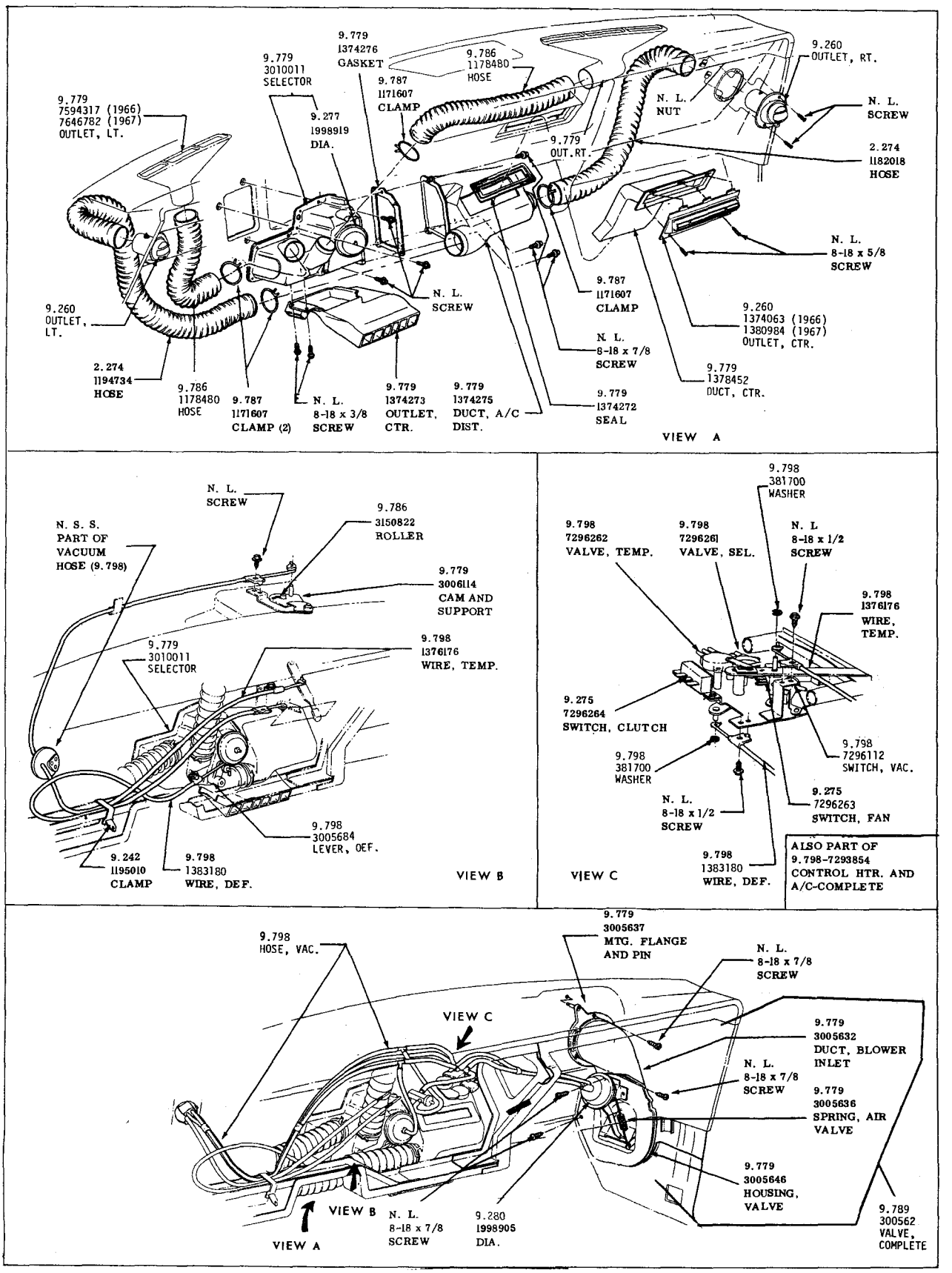

INSTRUMENT PANEL UNITS
AIR CONDITIONING
1966-1967 -RIVIERA

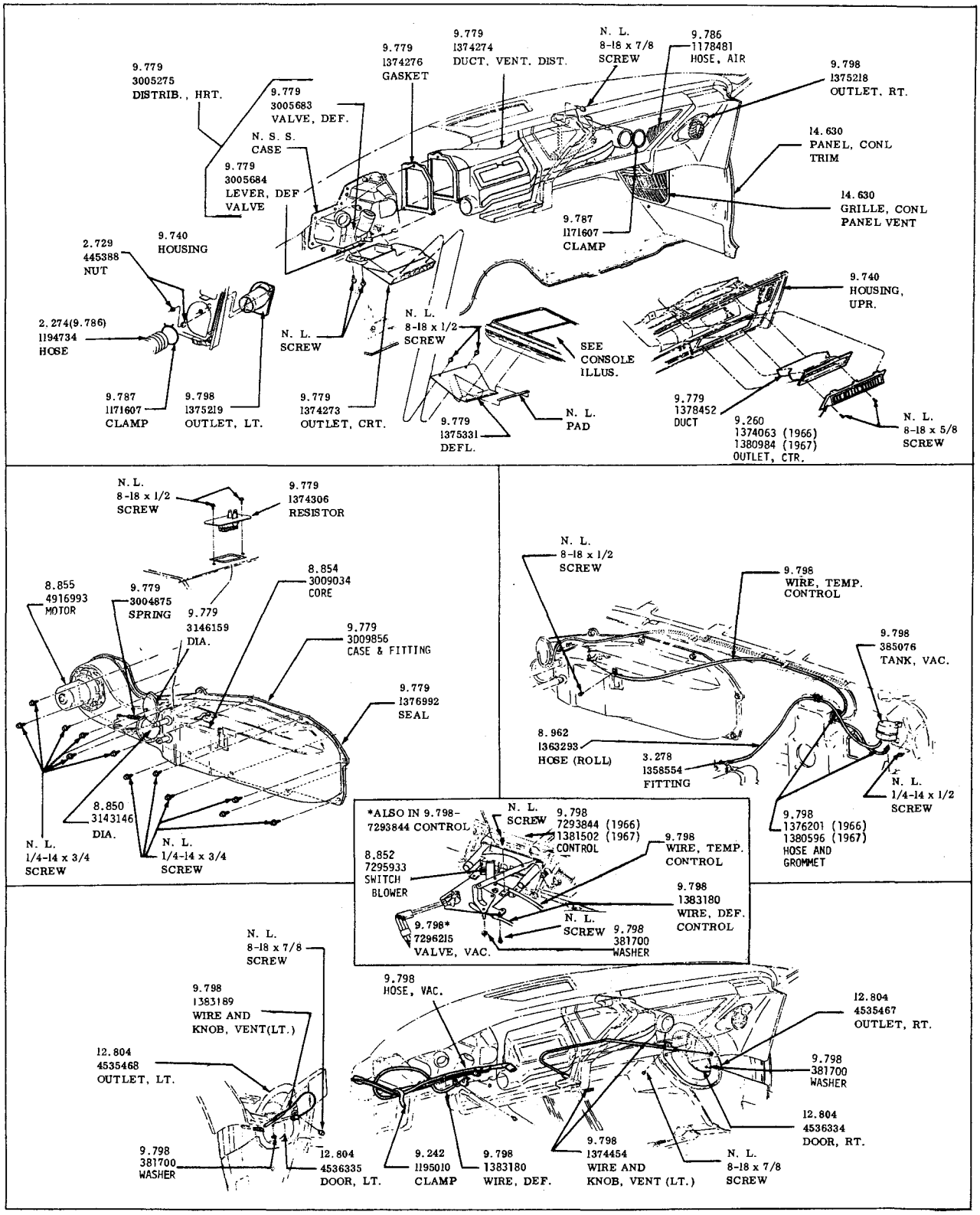

HEATER AND DEFROSTER

1966-1967 —RIVIERA (LESS A.C.)

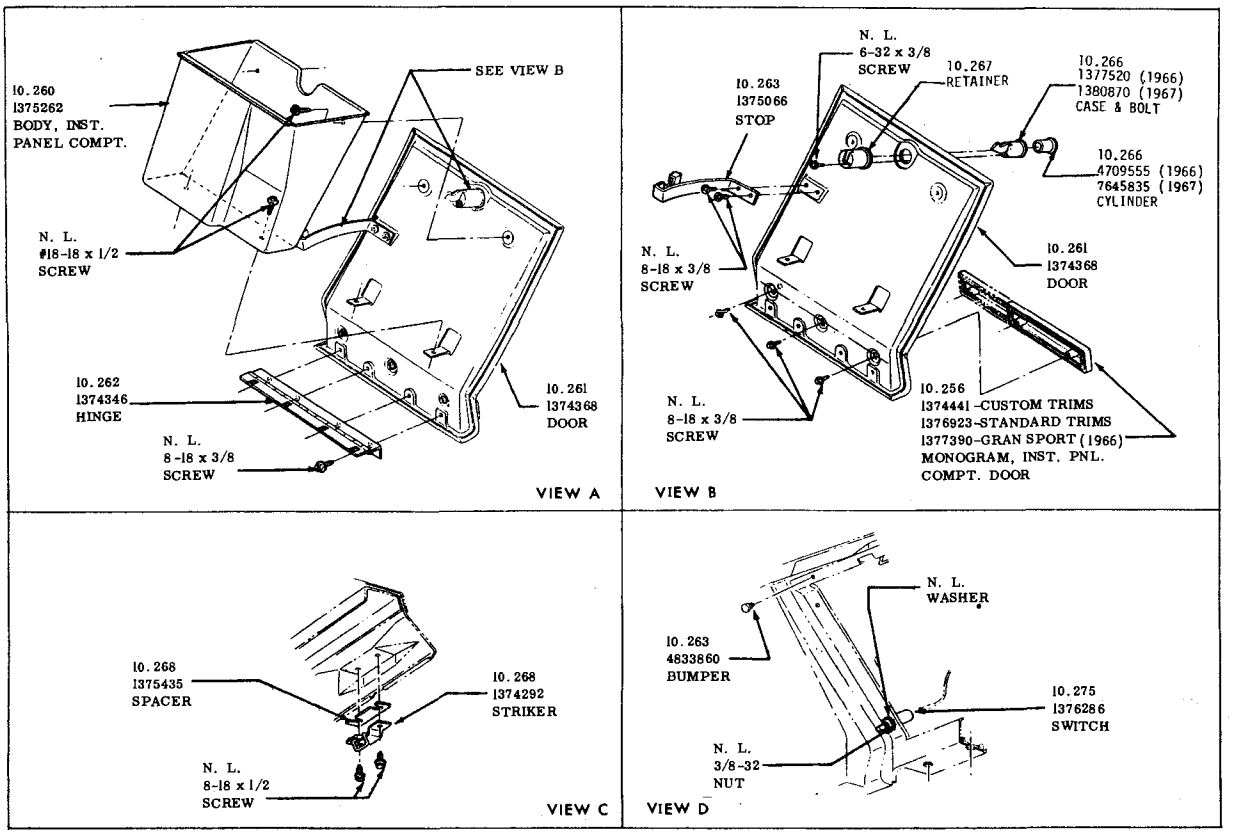

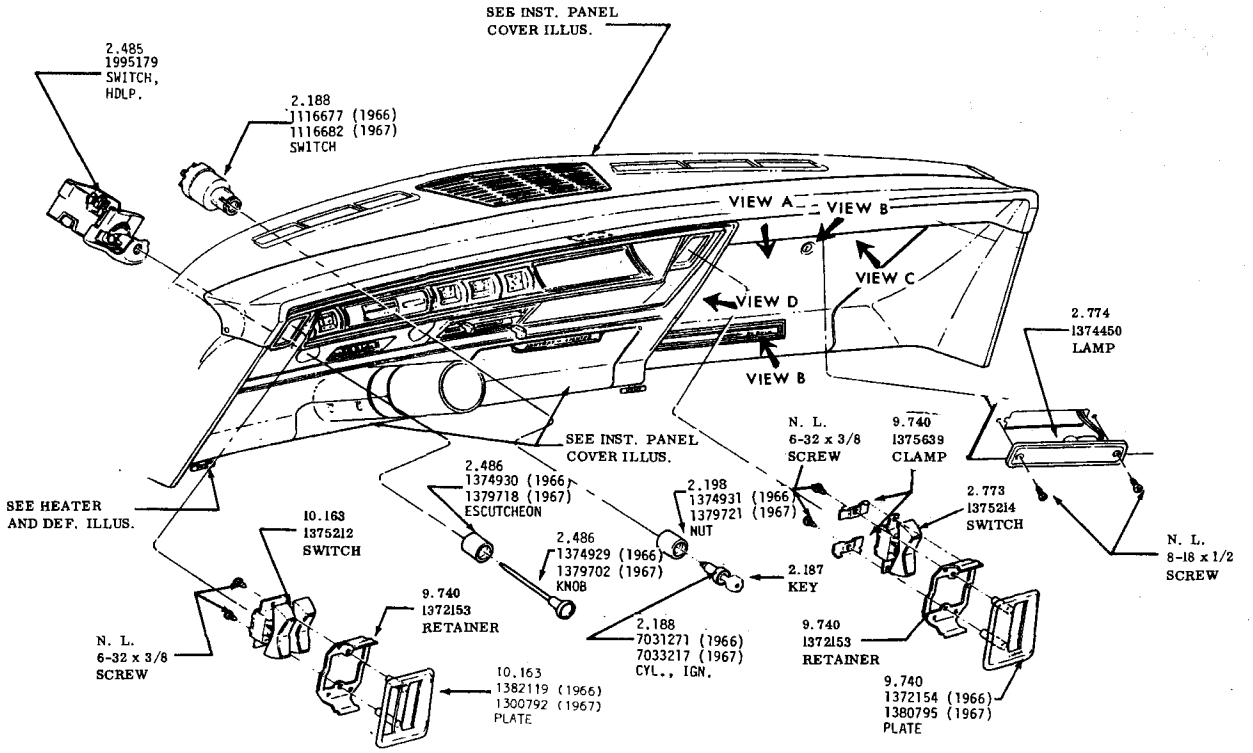

INSTRUMENT PANEL HARDWARE
1966-1967—RIVIERA

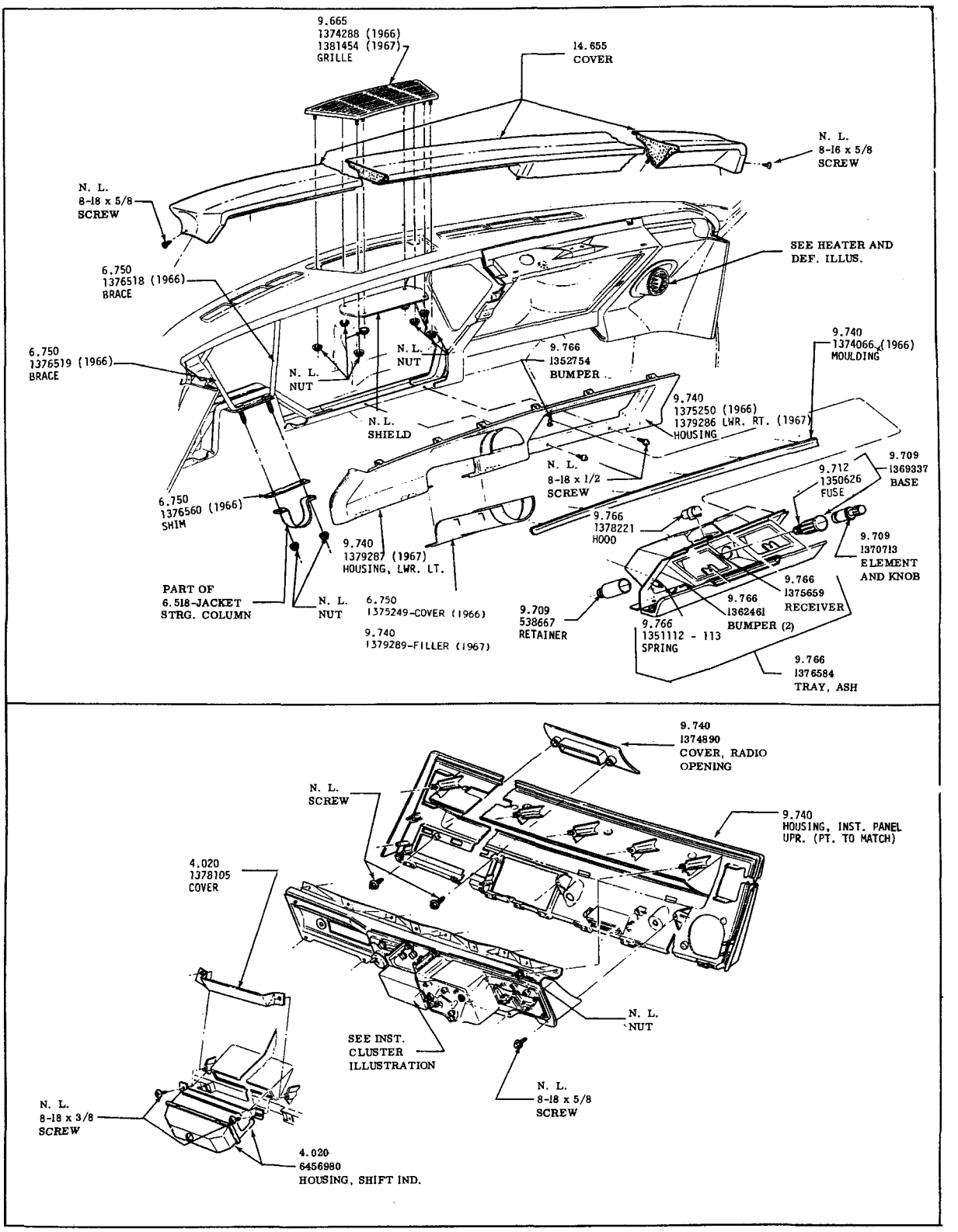

INSTRUMENT PANEL COVER AND HOUSING
1966-1967—RIVIERA

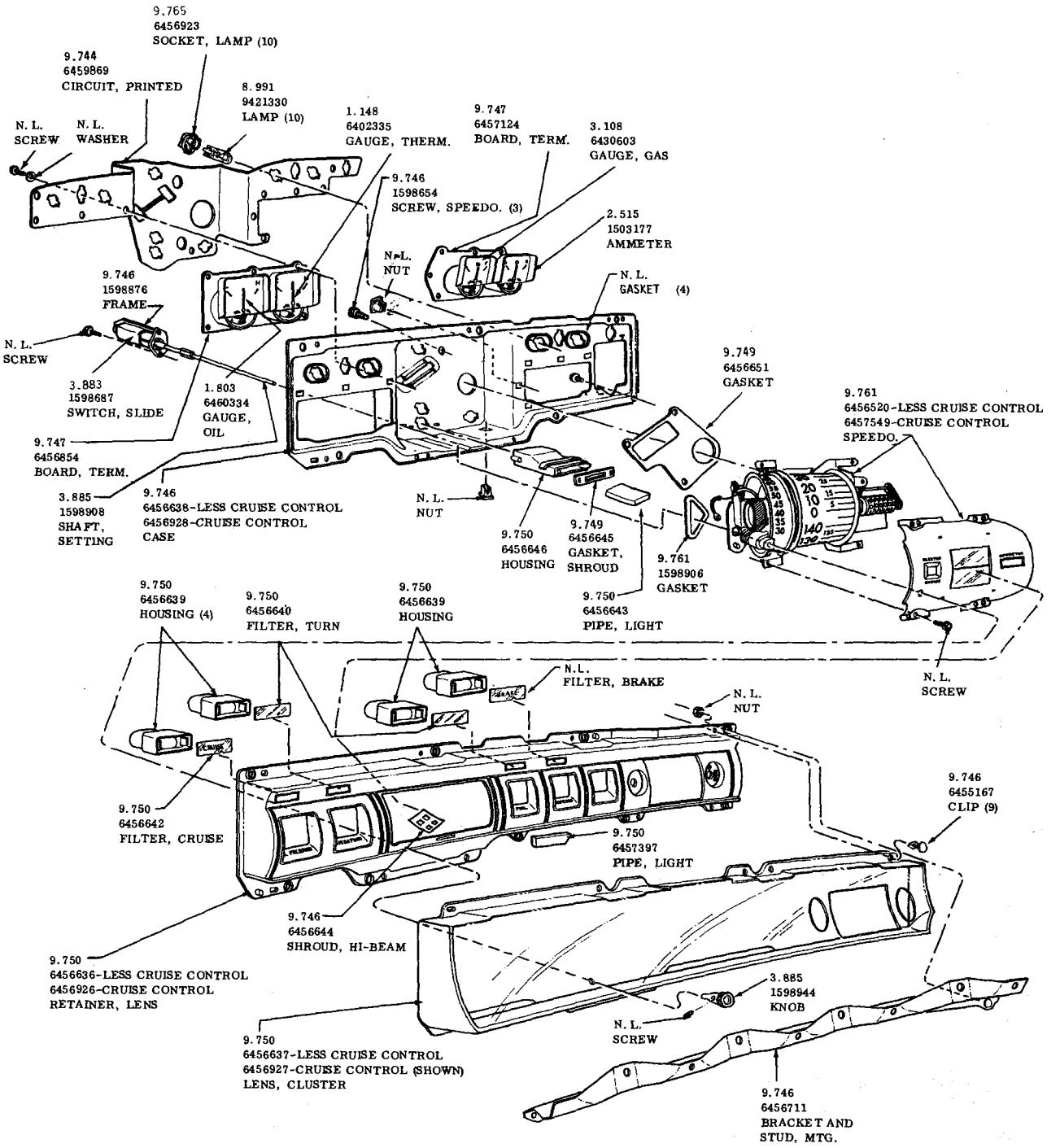

INSTRUMENT CLUSTER
1966-1967 — RIVIERA
(ELECTRO CRUISE CLUSTER SHOWN)

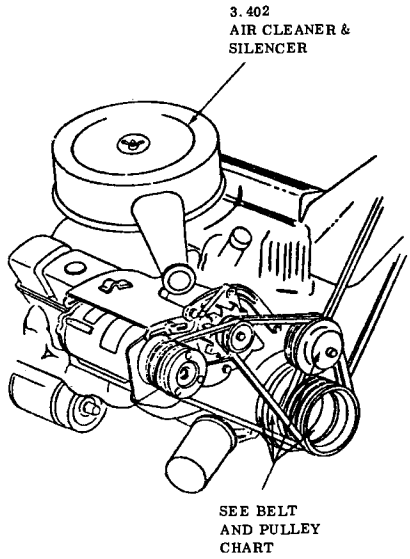

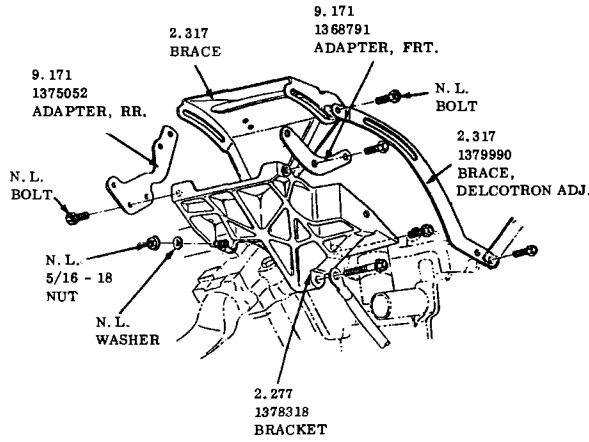

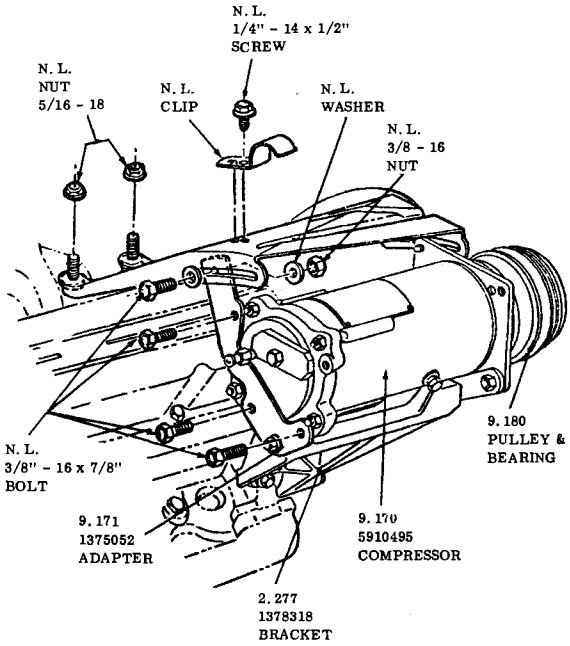

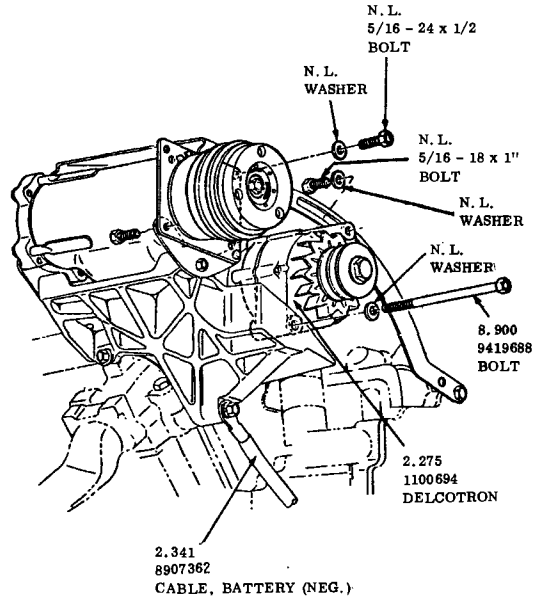

COMPRESSOR AND DELCOTRON MOUNTING

1967—ALL

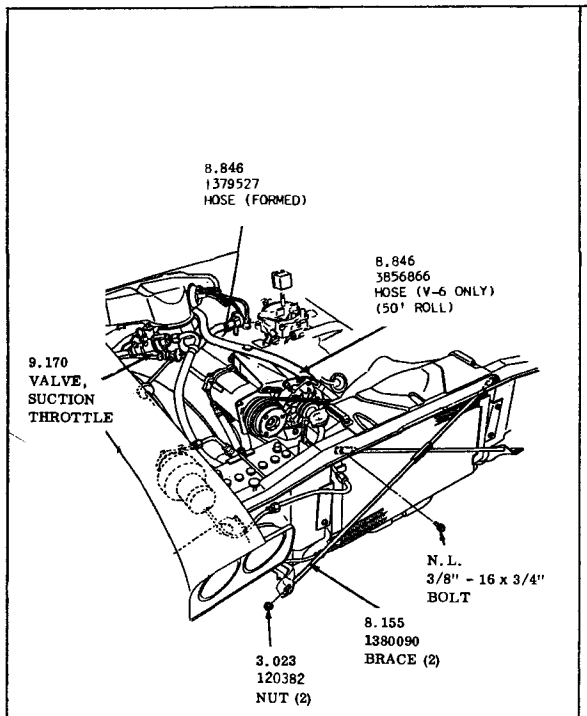

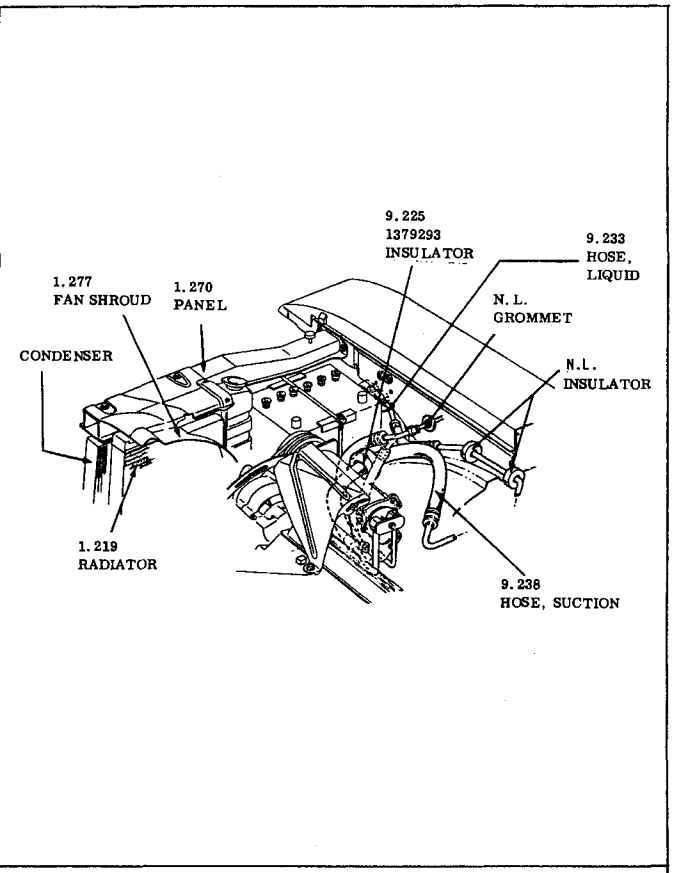

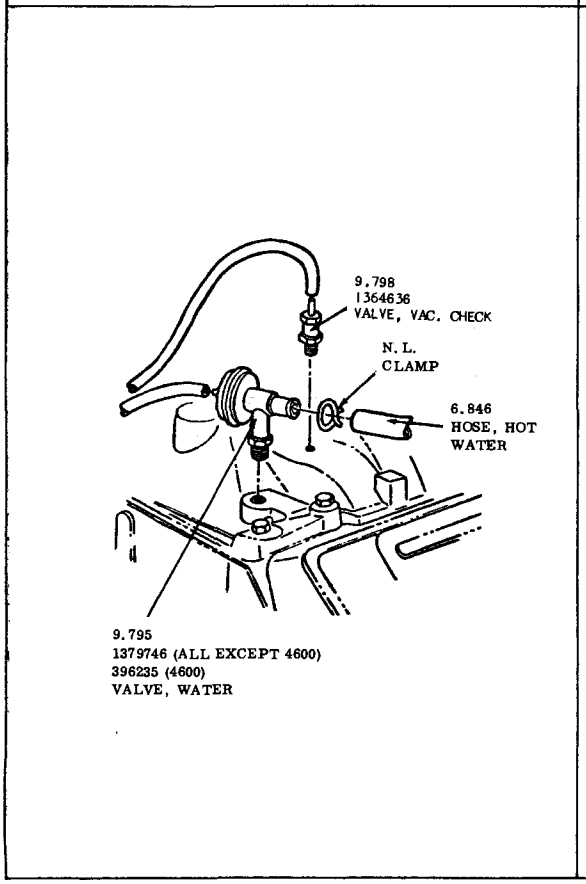

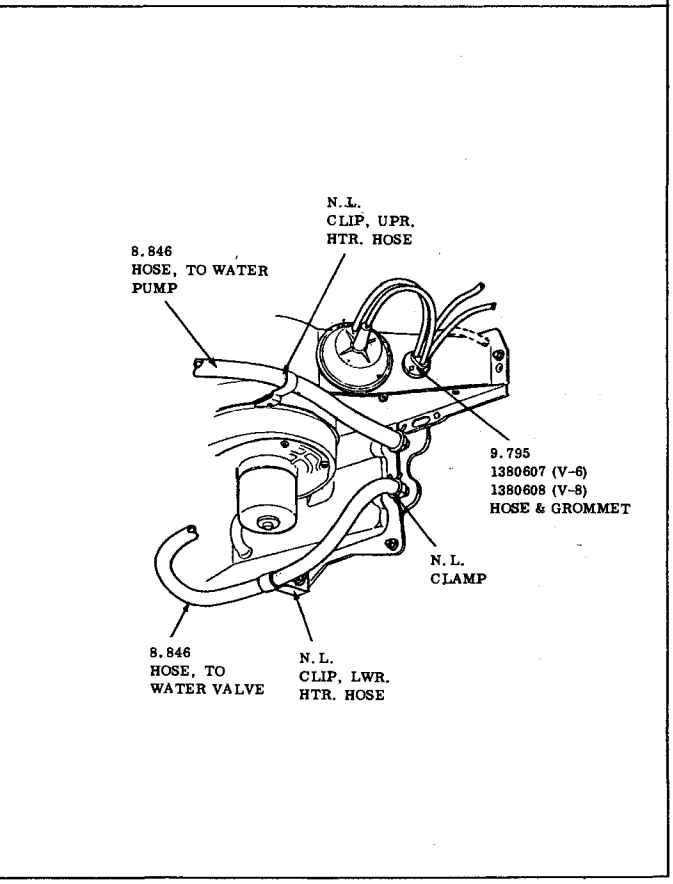

A.C. HOSES ENGINE UNIT
1967—SPECIAL—SKYLARK—G.S. 400

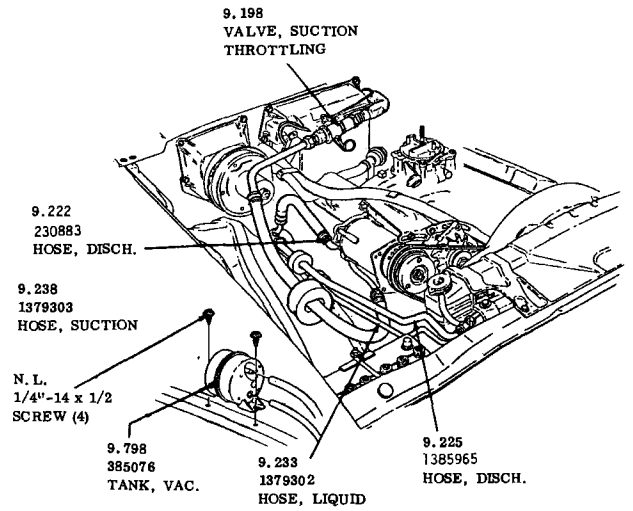

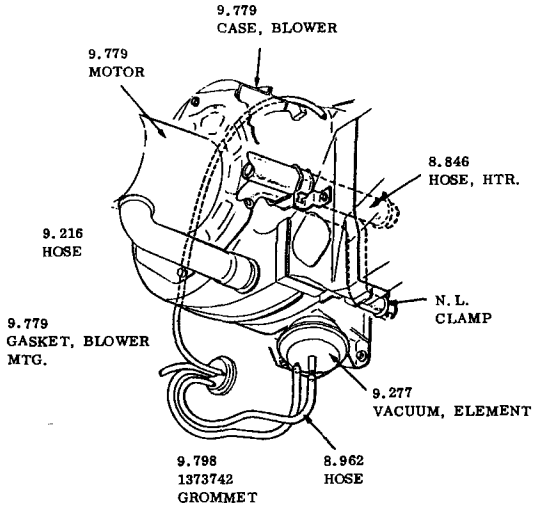

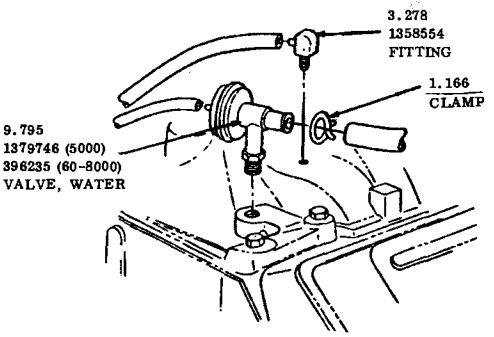

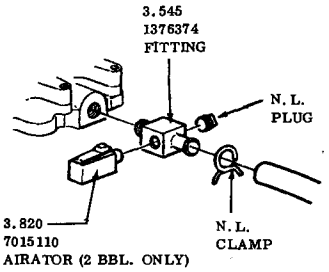

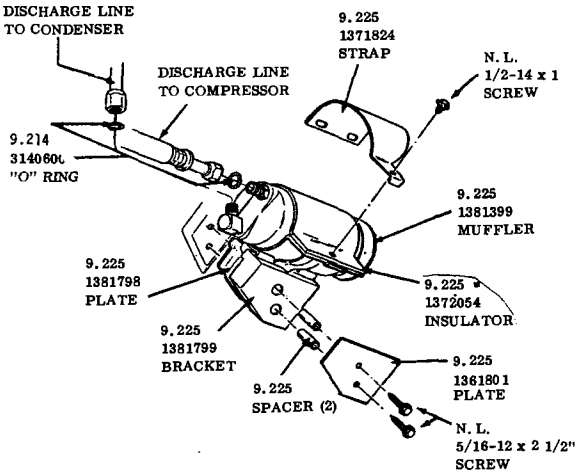

A.C. HOSES

1967—50—60—8000

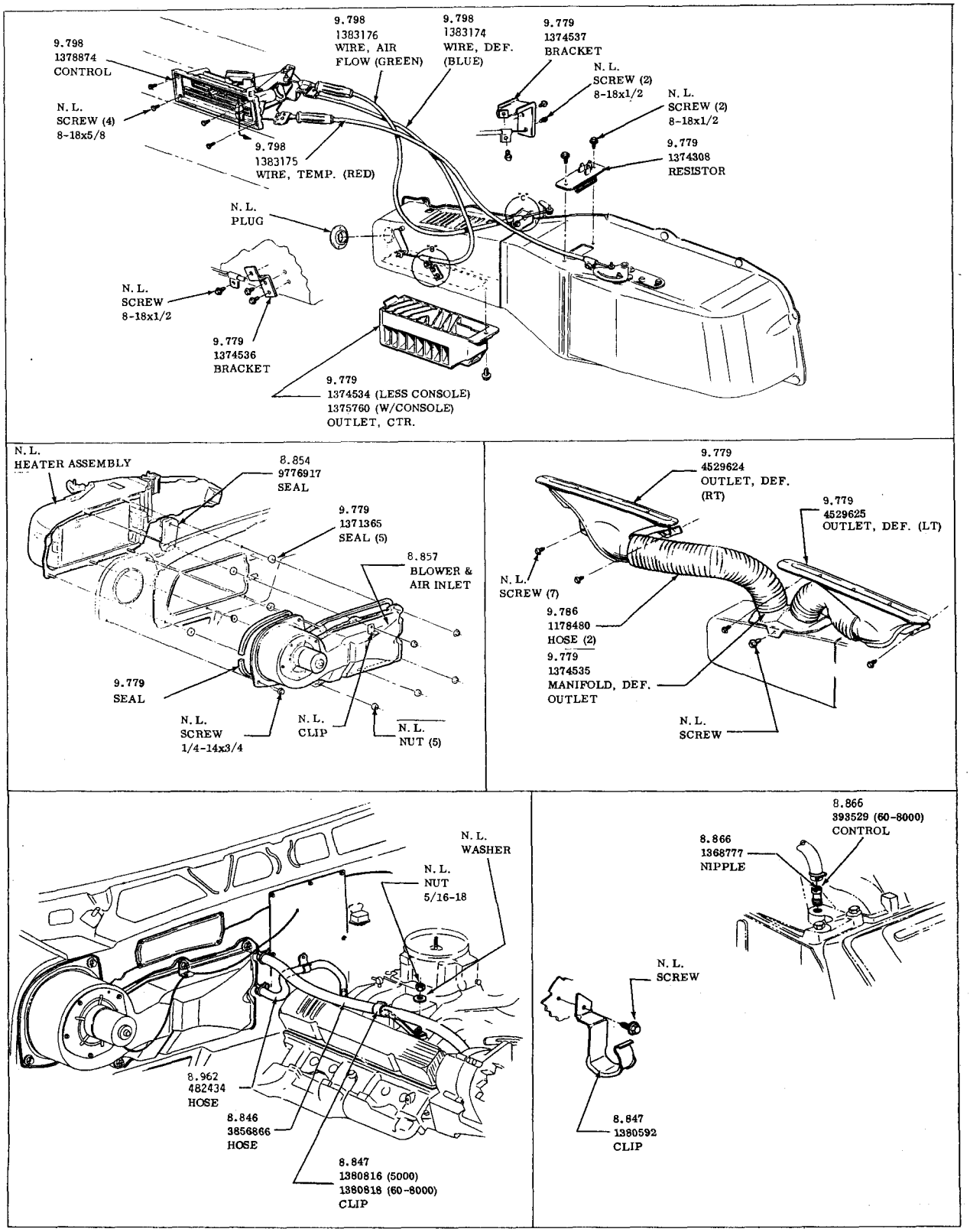

HEATER AND DEFROSTER

1967—LeSabre—Wildcat—Electra 225

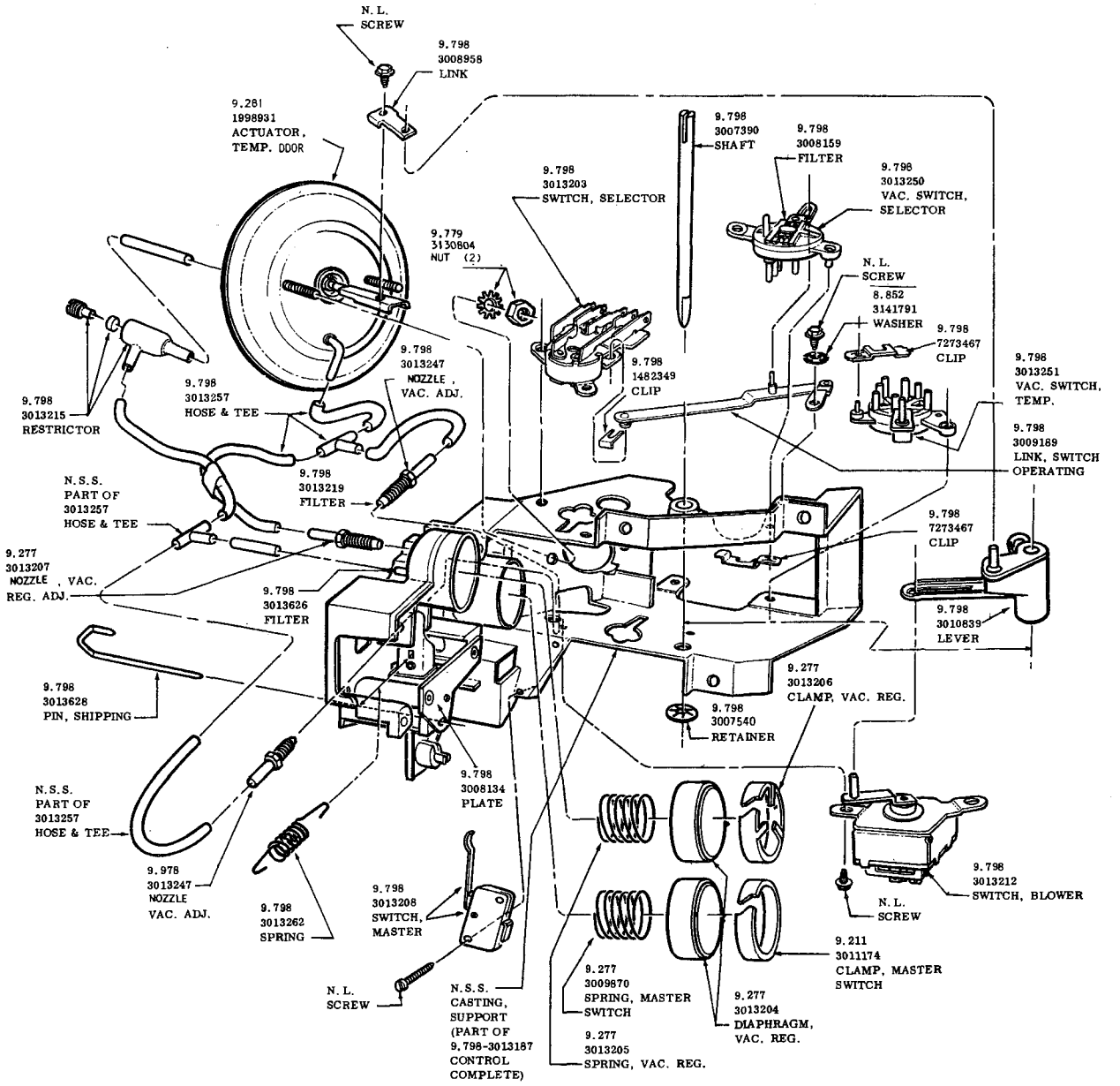

AUTOMATIC TEMPERATURE CONTROL
EXPLODED VIEW OF 9.798- 3021873
1967-50-60-8000 W/AUTO CLIMATE CONTROL
(SECOND TYPE)

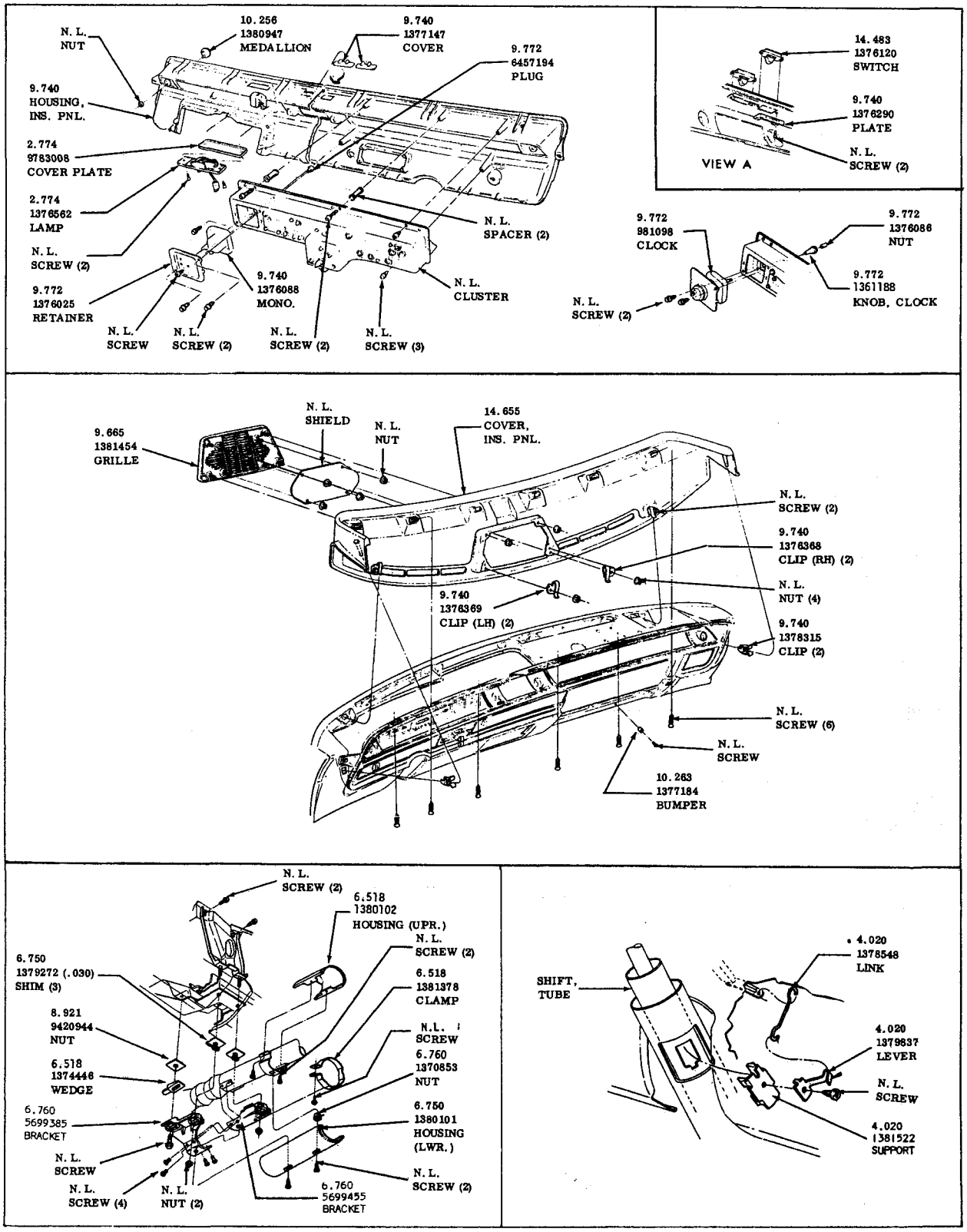

INSTRUMENT PANEL COVER AND HARDWARE
1967—LE SABRE— WILDCAT —ELECTRA 225

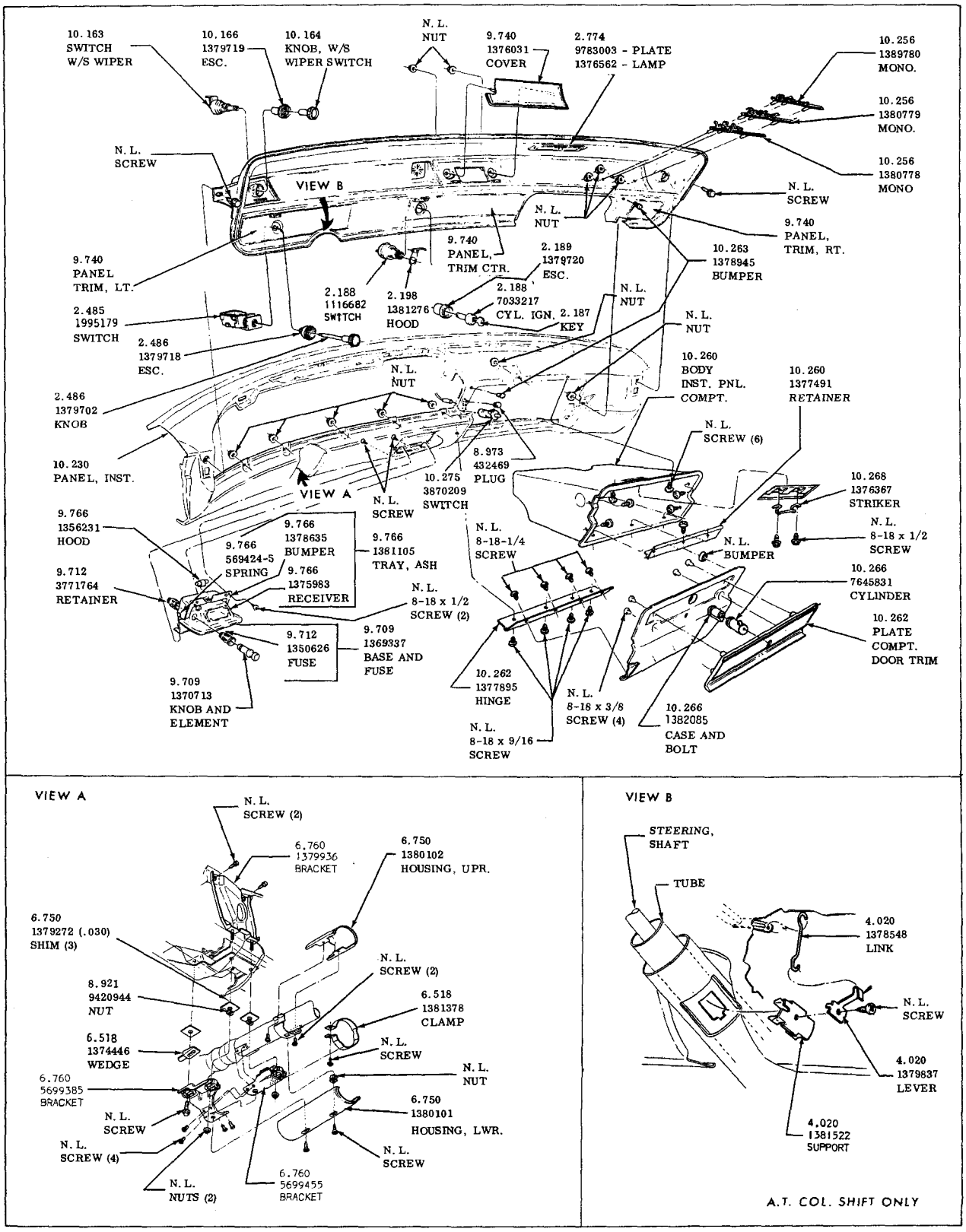

INSTRUMENT PANEL

1967—LE SABRE—WILDCAT—ELECTRA 225

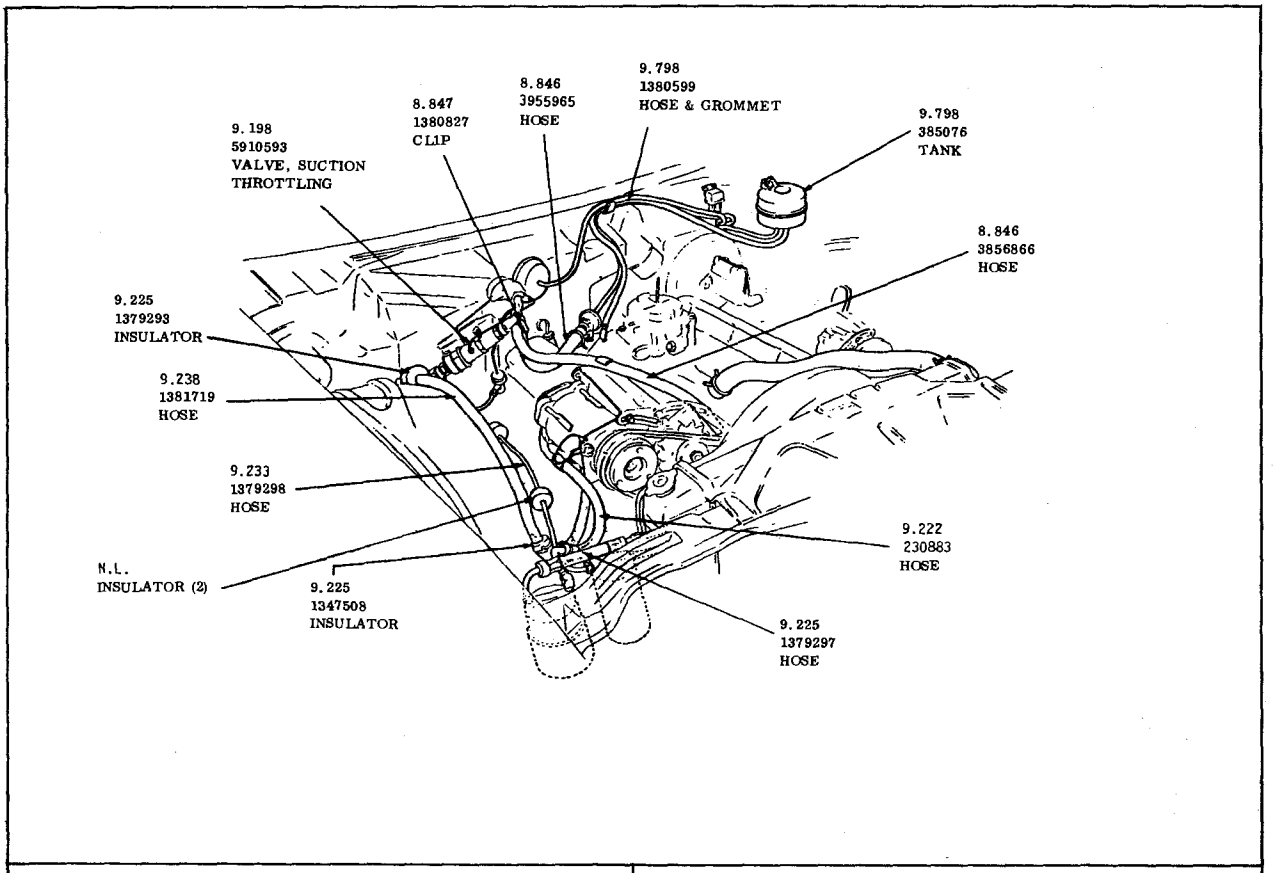

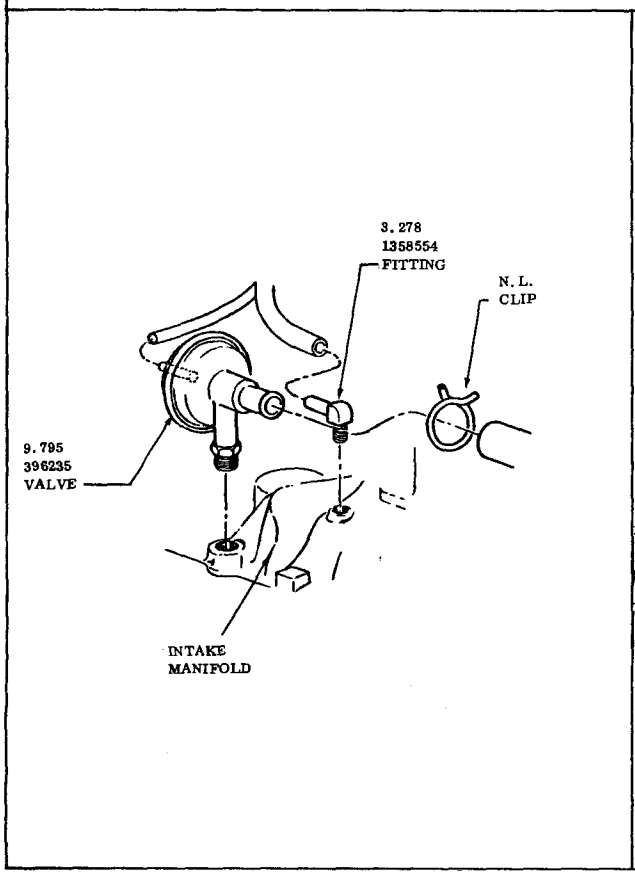

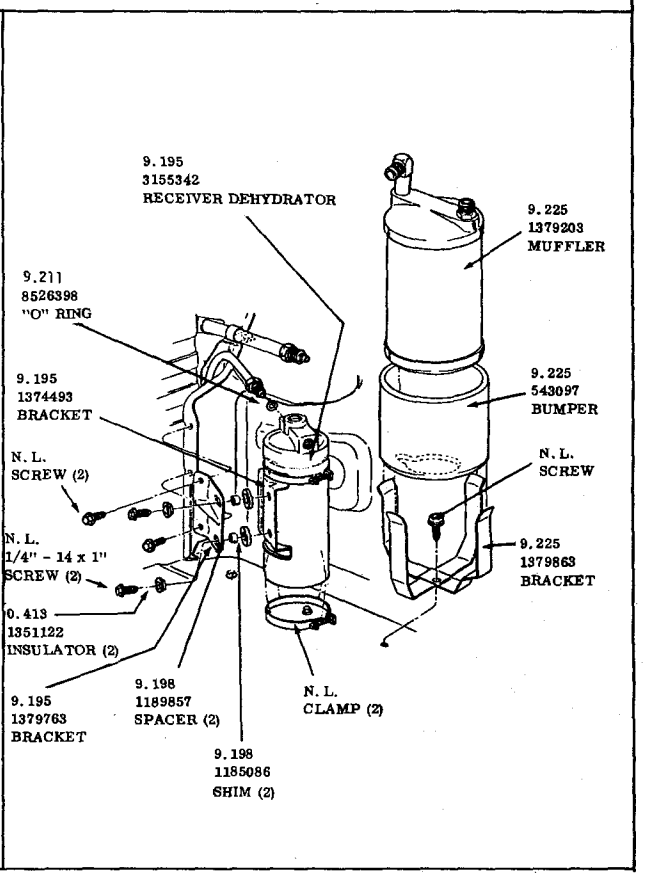

A.C. HOSES
1967—RIVIERA

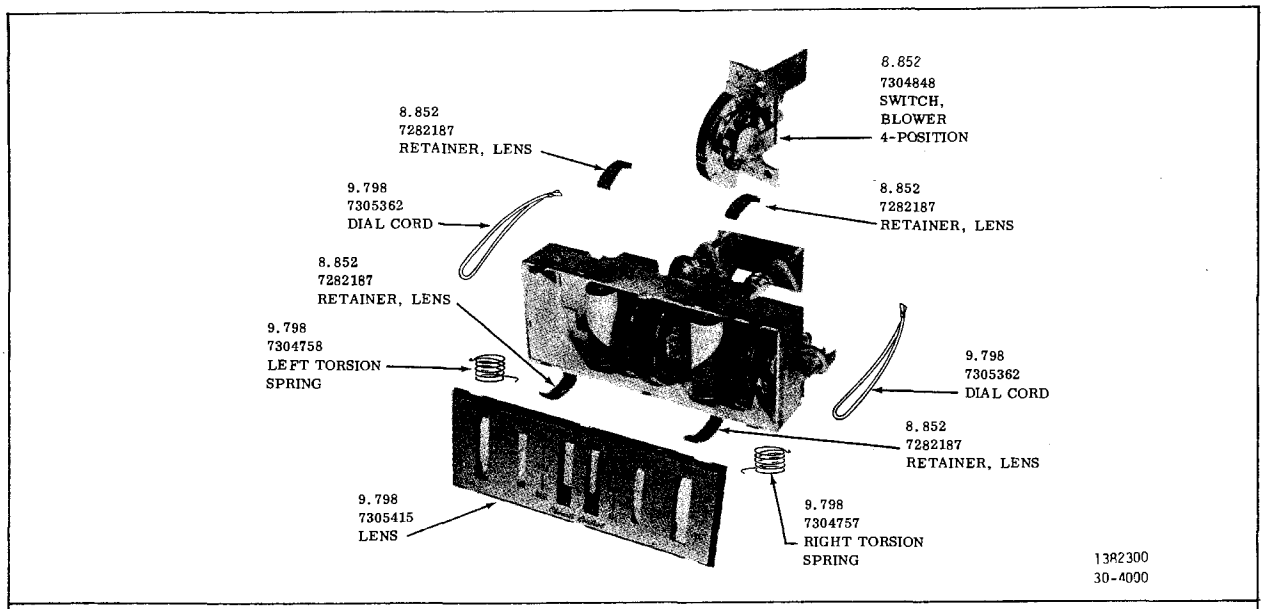

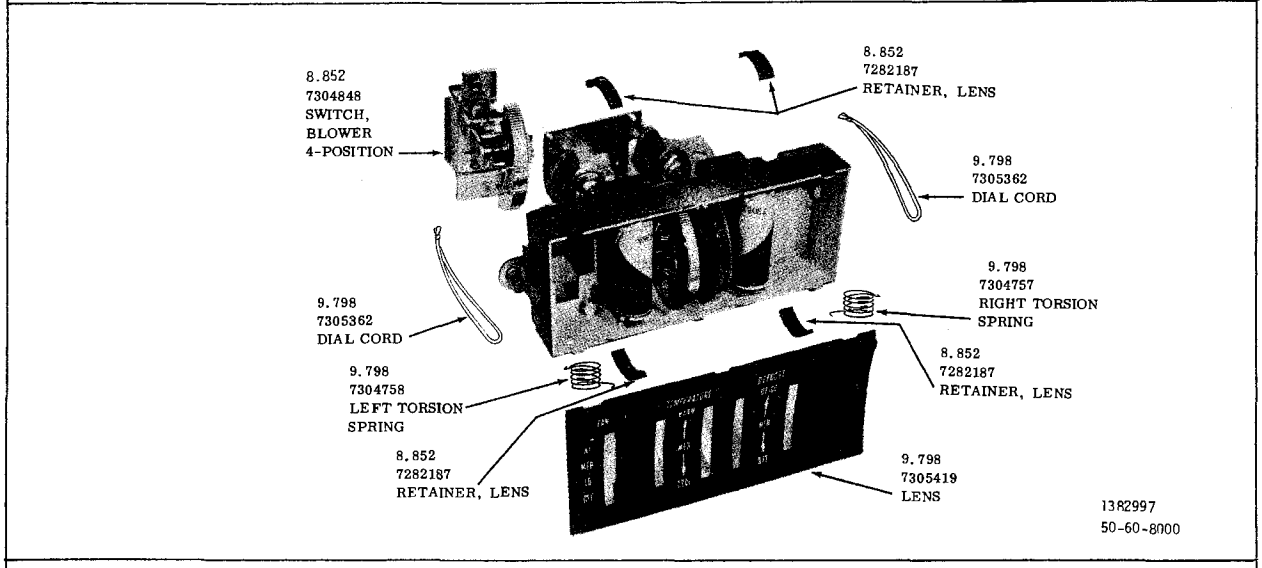

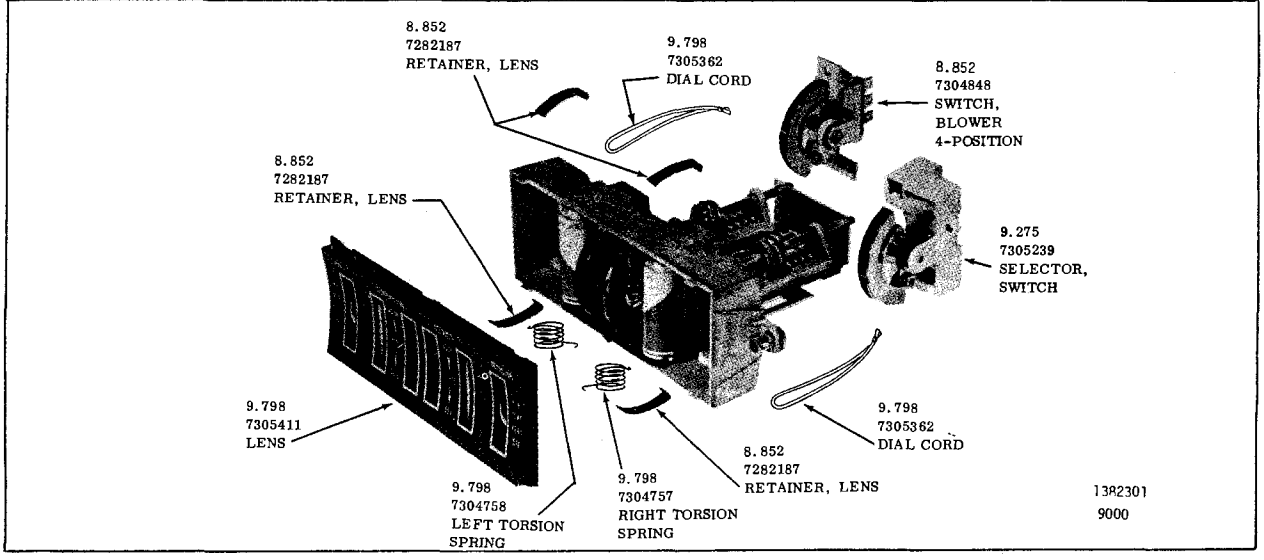

HEATER CONTROL
1968-ALL

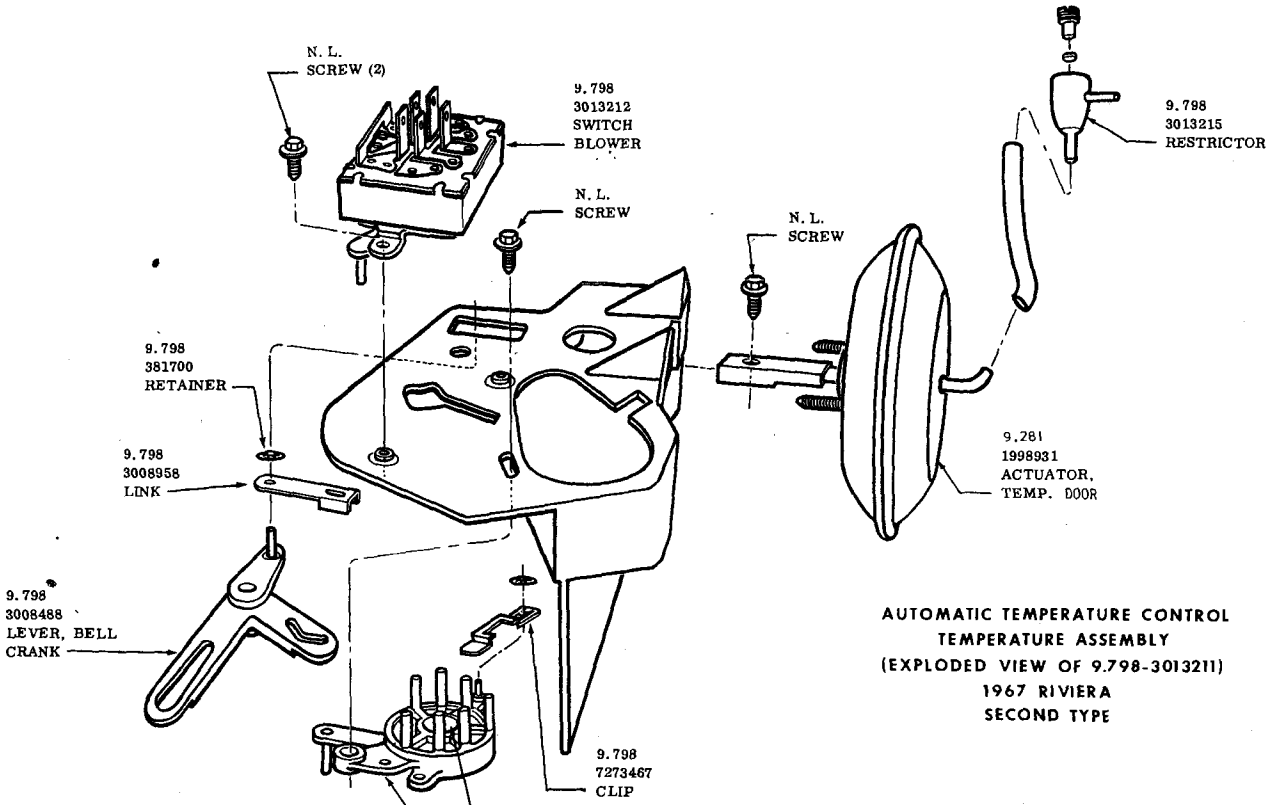

AUTOMATIC TEMPERATURE CONTROL
TEMPERATURE ASSEMBLY
(EXPLODED VIEW OF 9.798-3013211)
1967 RIVIERA
SECOND TYPE

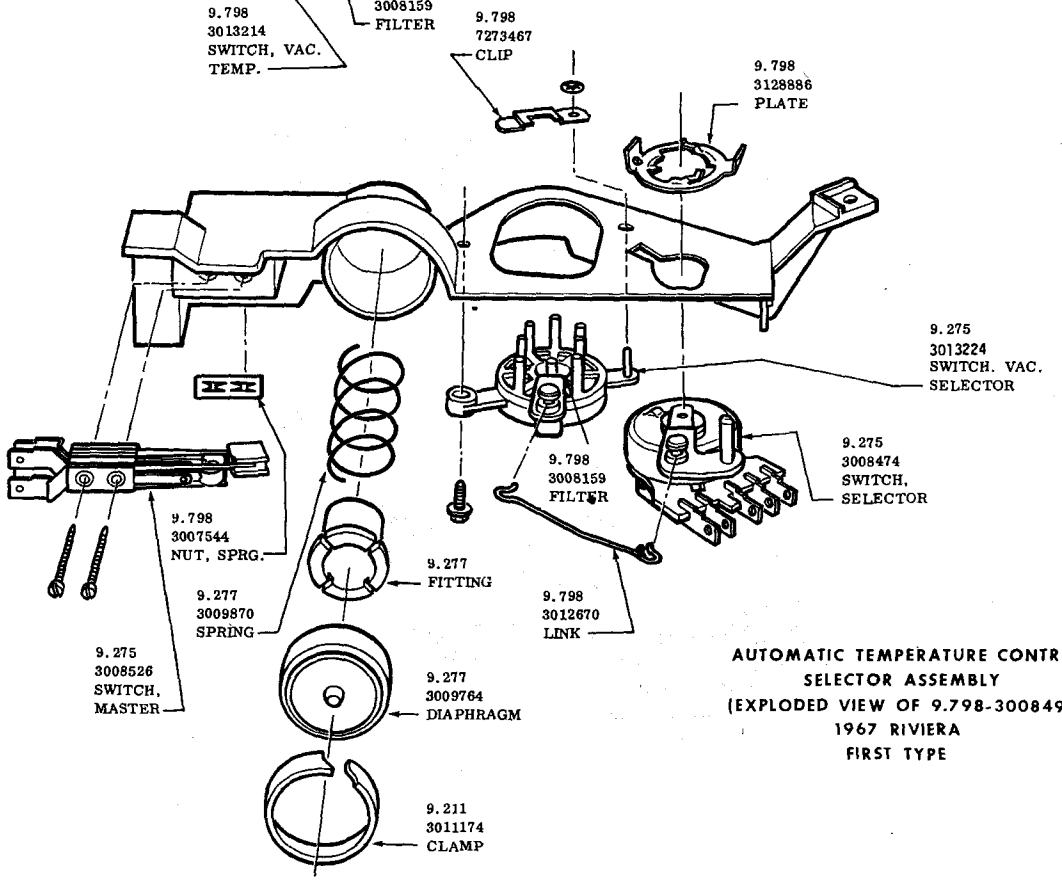

AUTOMATIC TEMPERATURE CONTROL
SELECTOR ASSEMBLY
(EXPLODED VIEW OF 9.798-3008497)
1967 RIVIERA
FIRST TYPE

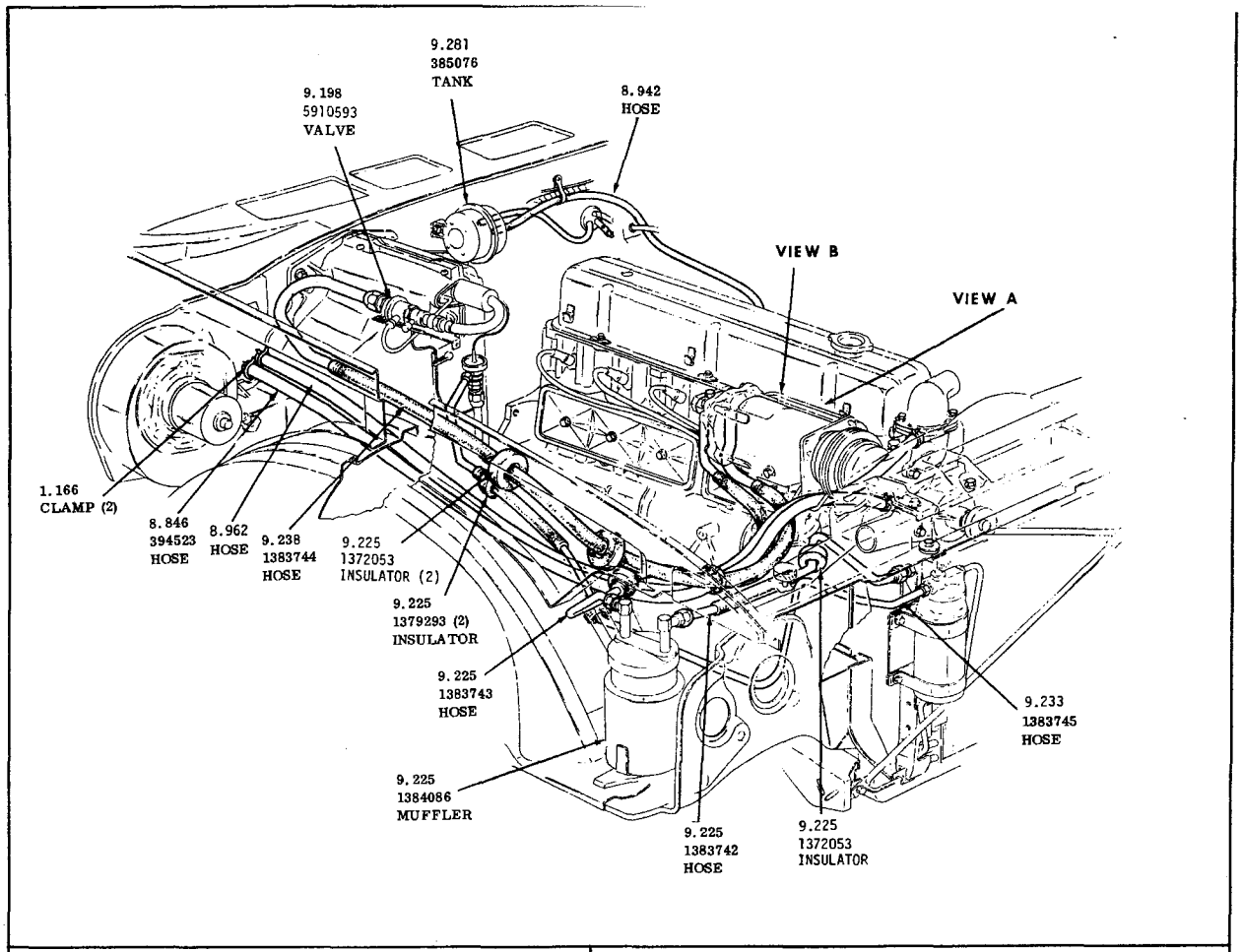

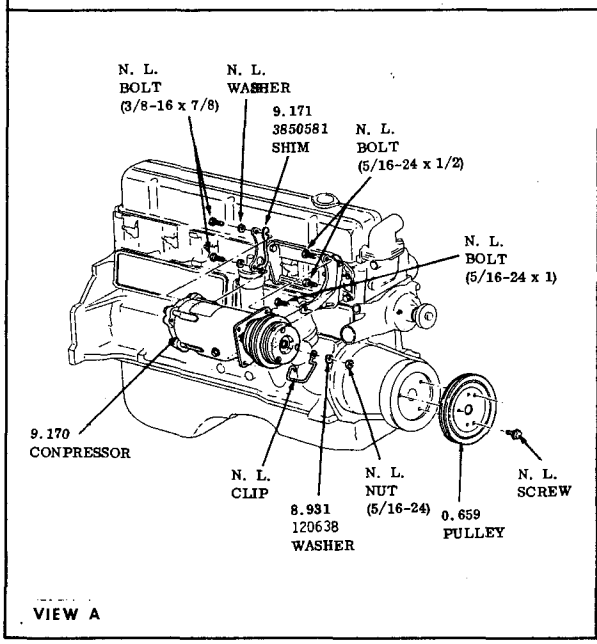

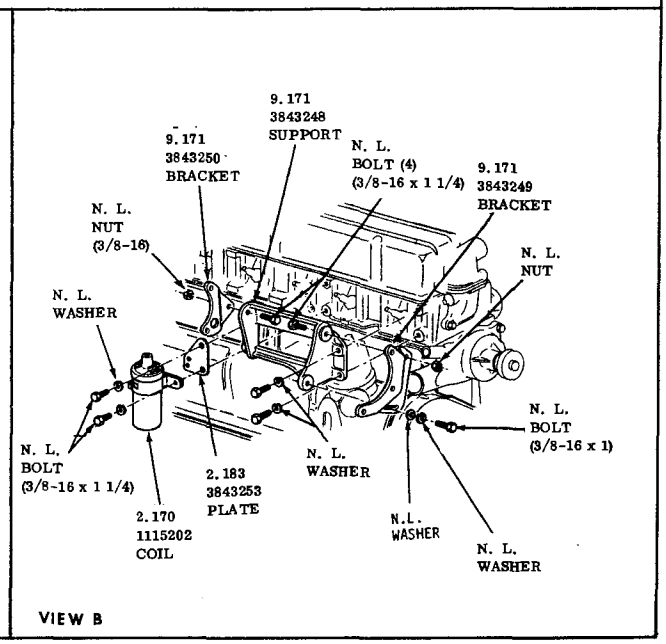

AIR CONDITION HOSE & COMPRESSOR
1968-1971 - L-6 250 CU. IN. ENGINE

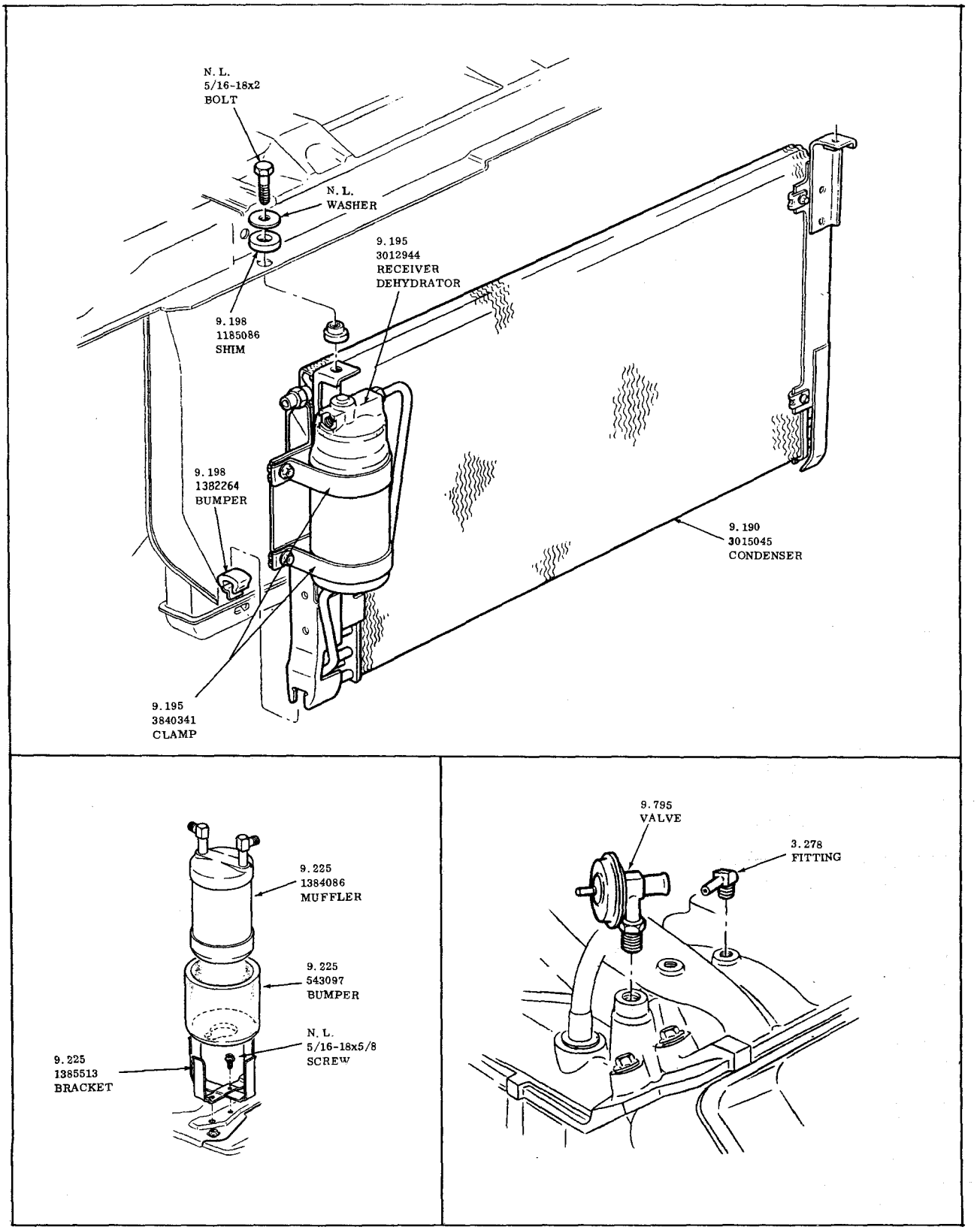

A/C RECEIVER DEHYDRATOR, MUFFLER & WATER VALVE

1968 - 30-4000

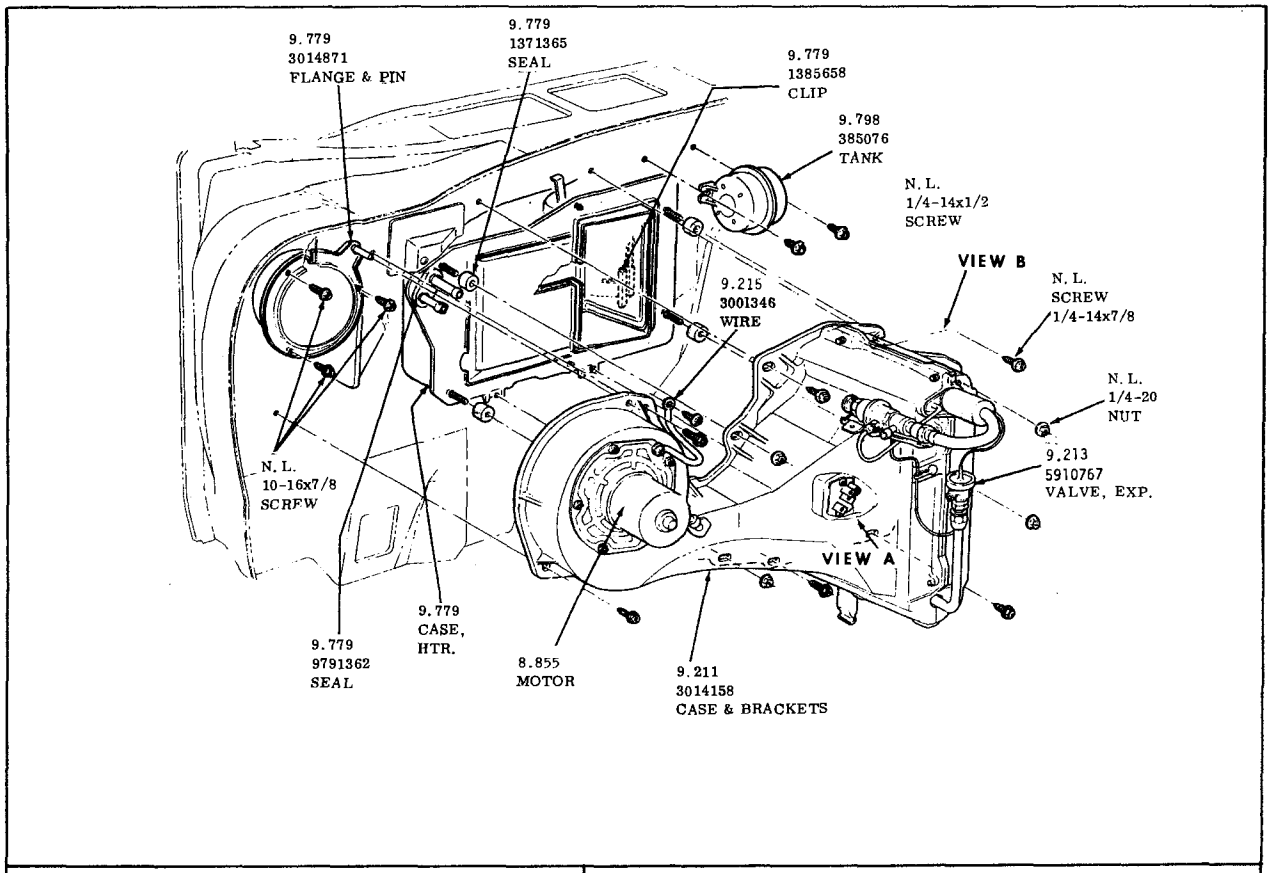

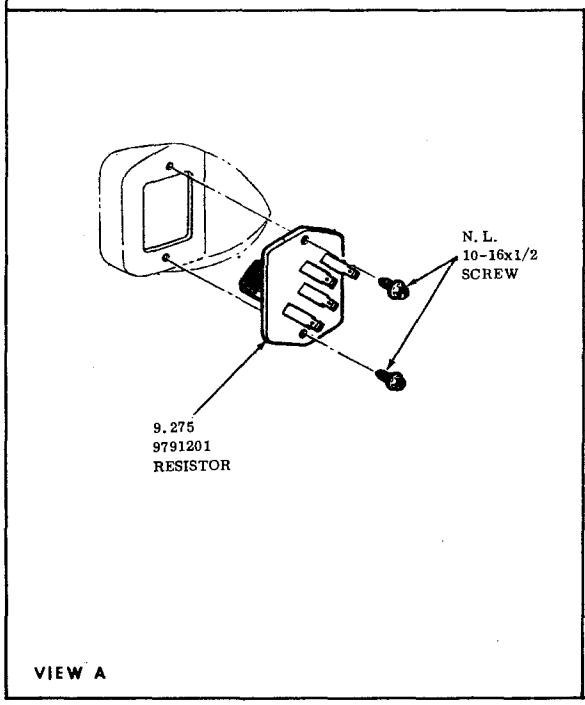

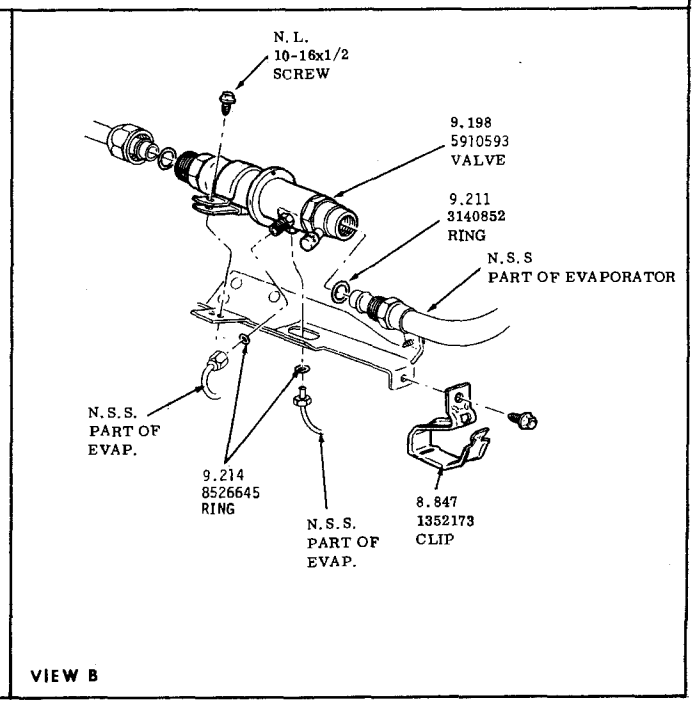

AIR CONDITIONING EVAPORATOR & BLOWER
1968 - 30-4000

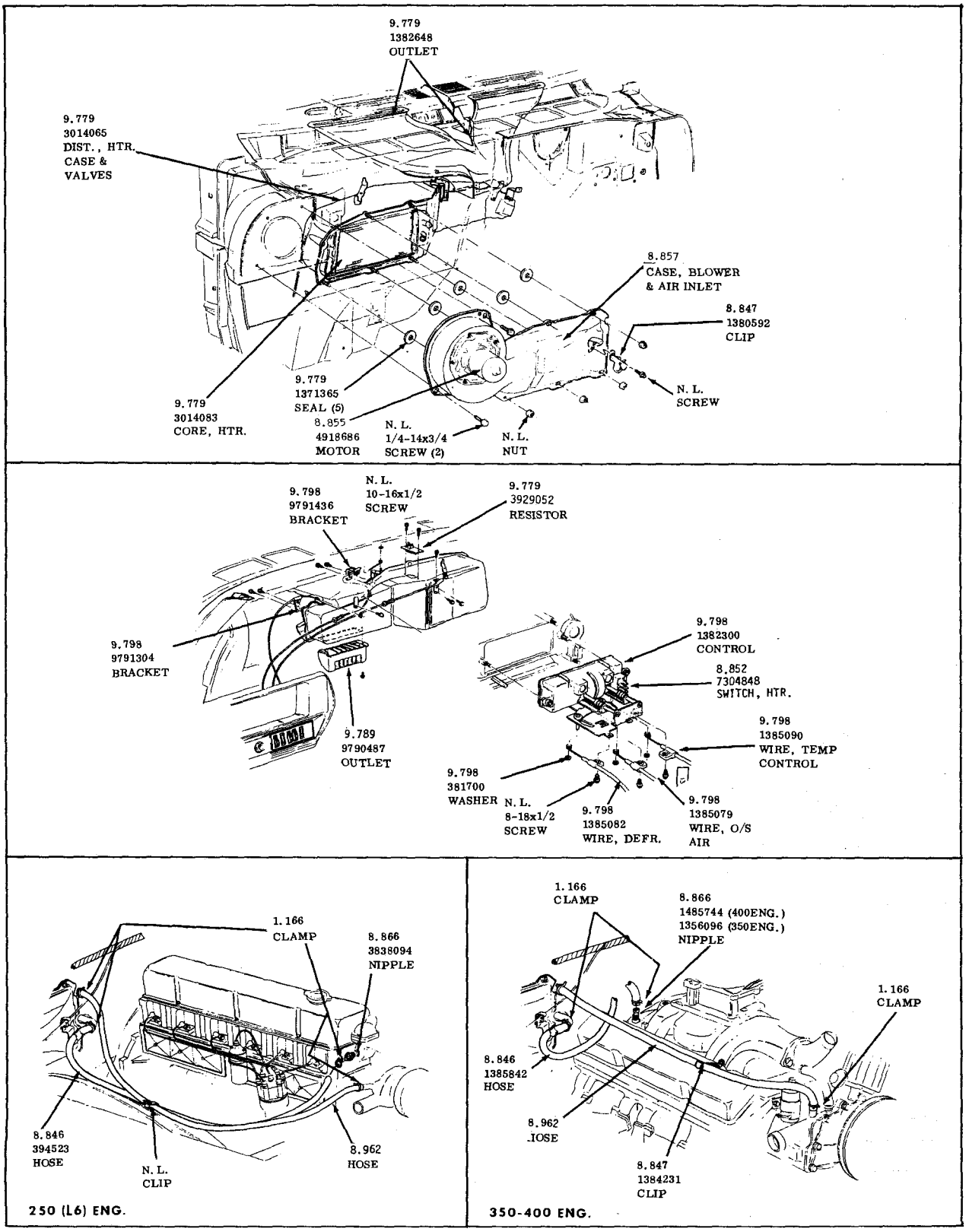

HEATER & DEFROSTER
1968 - 30-4000

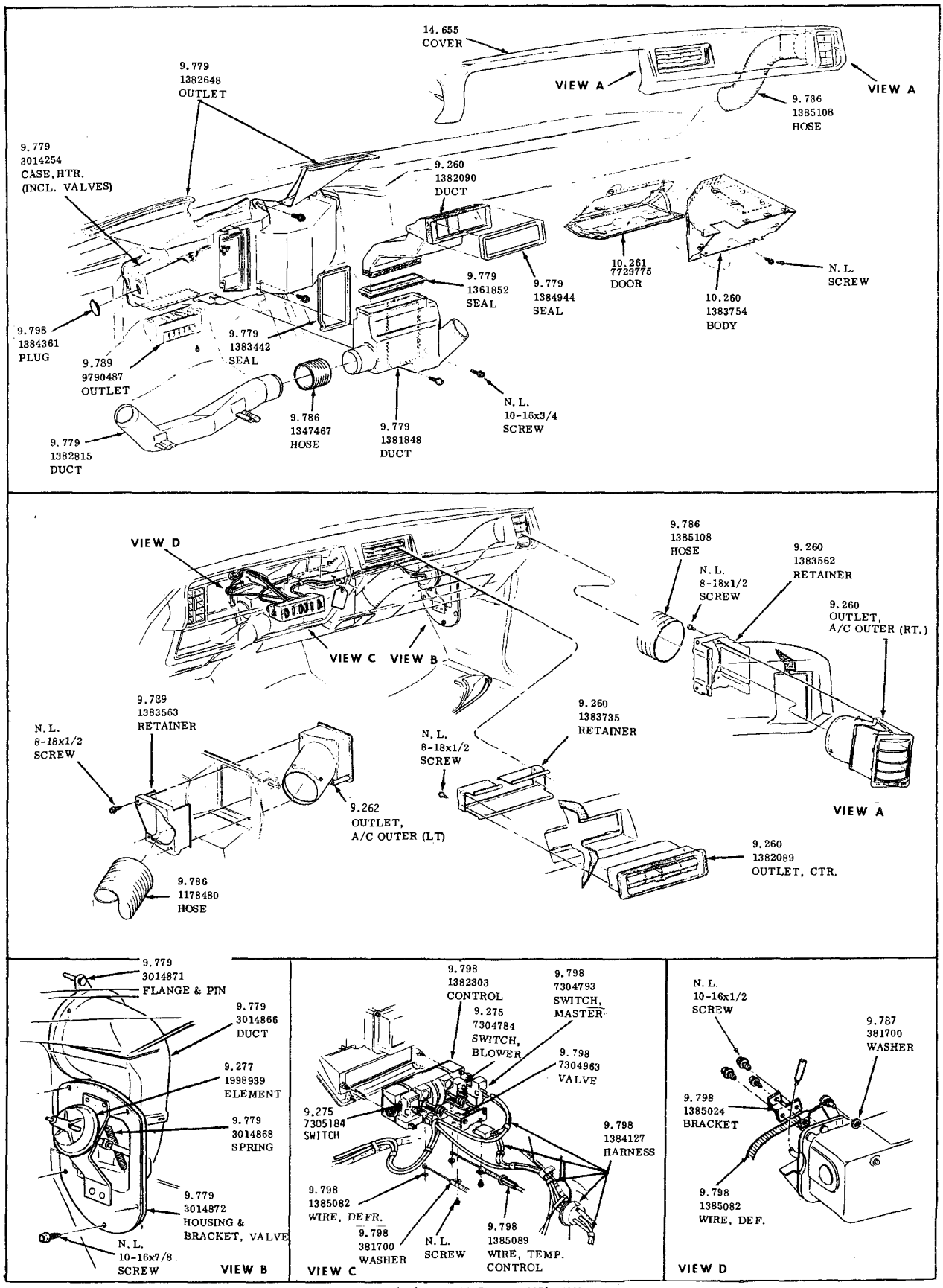

A/C INSTRUMENT PANEL UNITS
1968 - 30 -4000

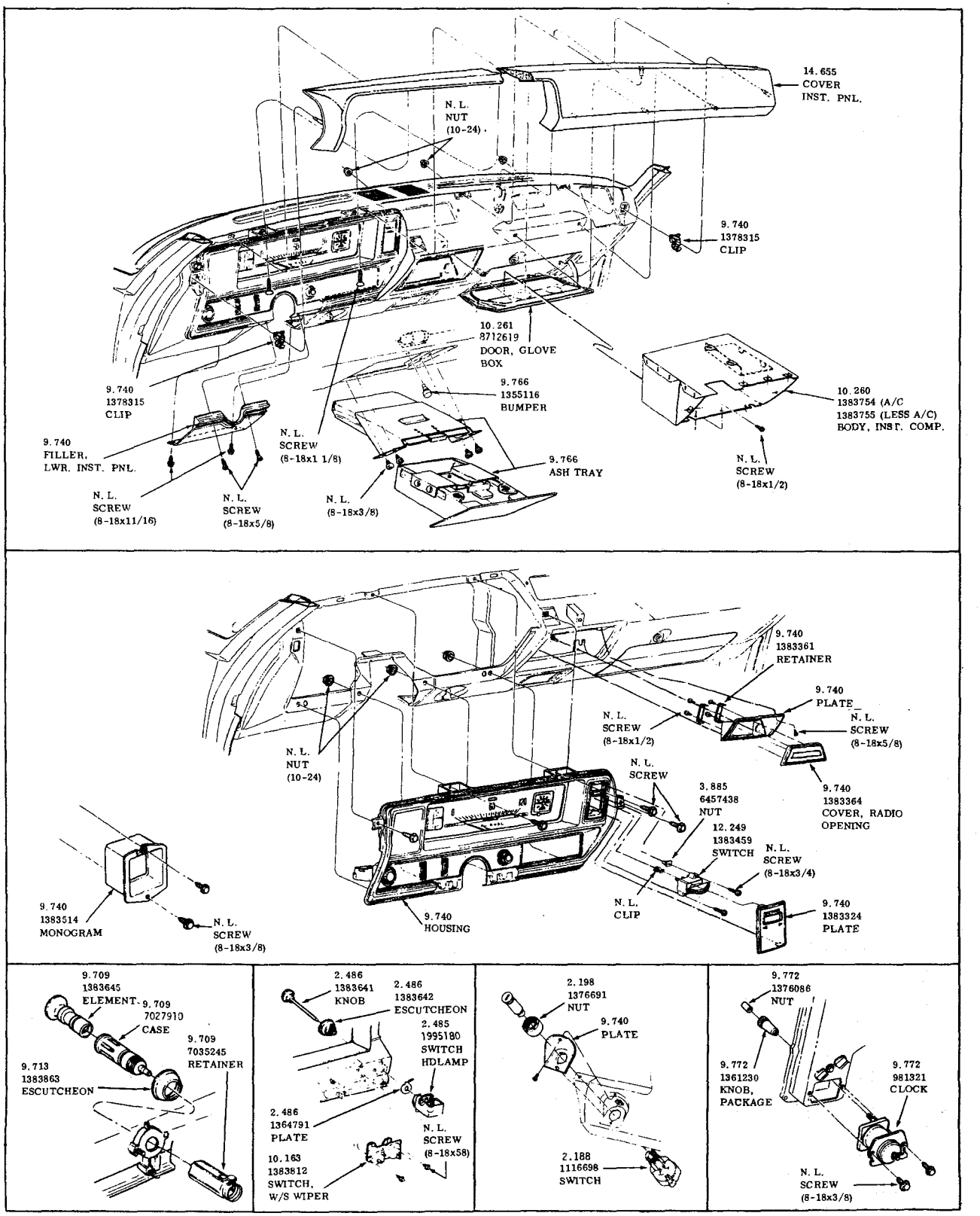

INSTRUMENT PANEL
1968-1969 - 30-4000

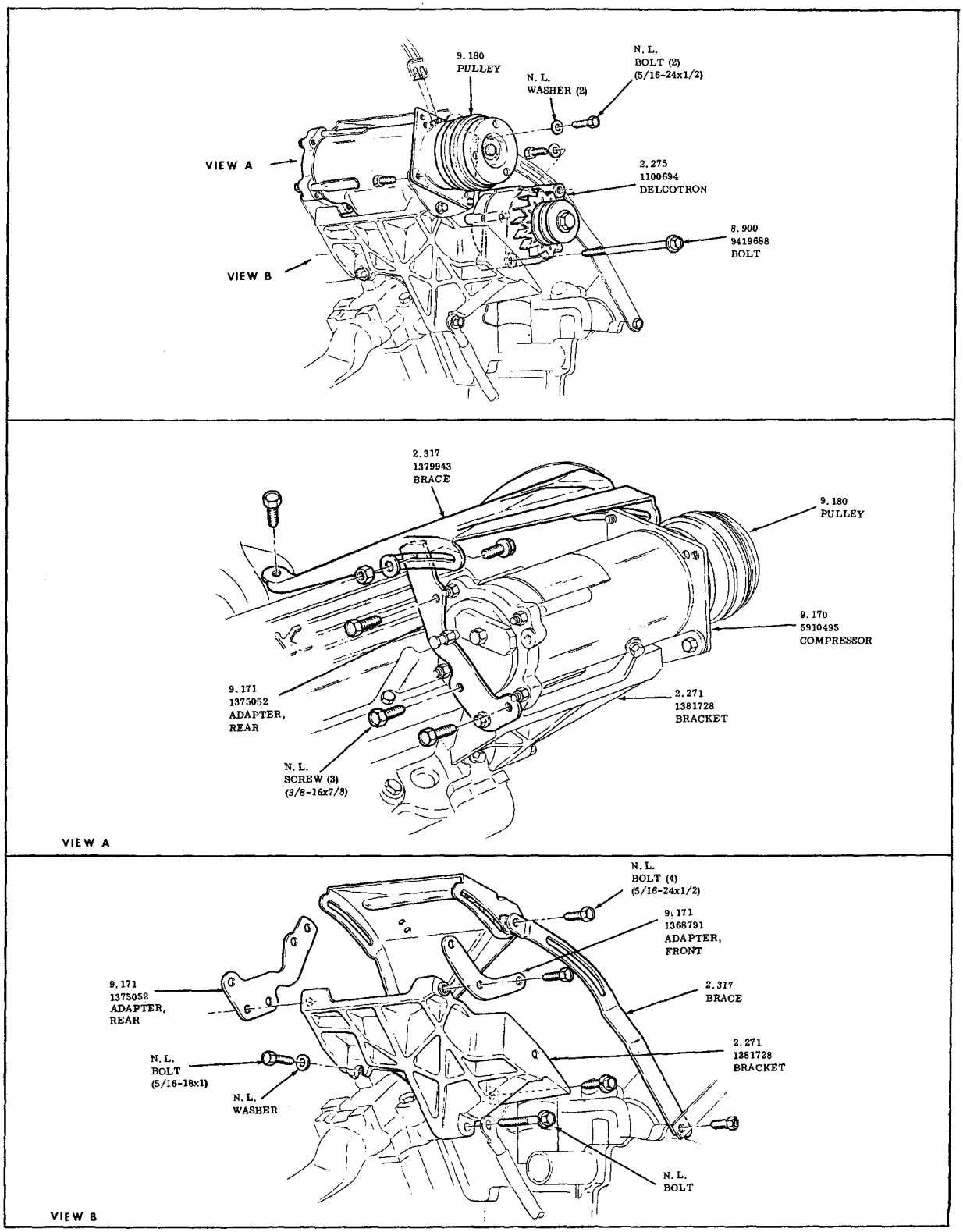

AIR CONDITIONING COMPRESSOR MOUNTING
1968-50-60-8000

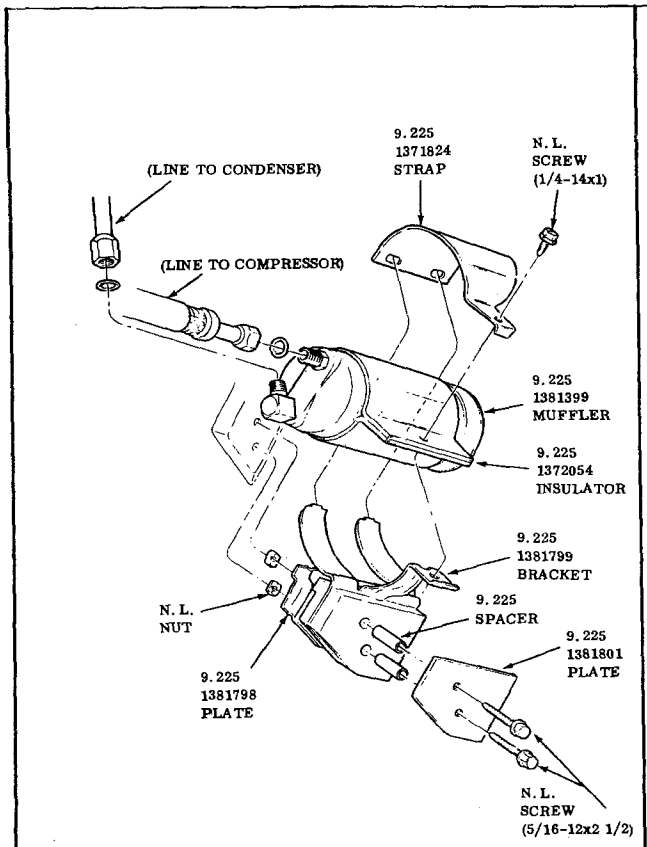

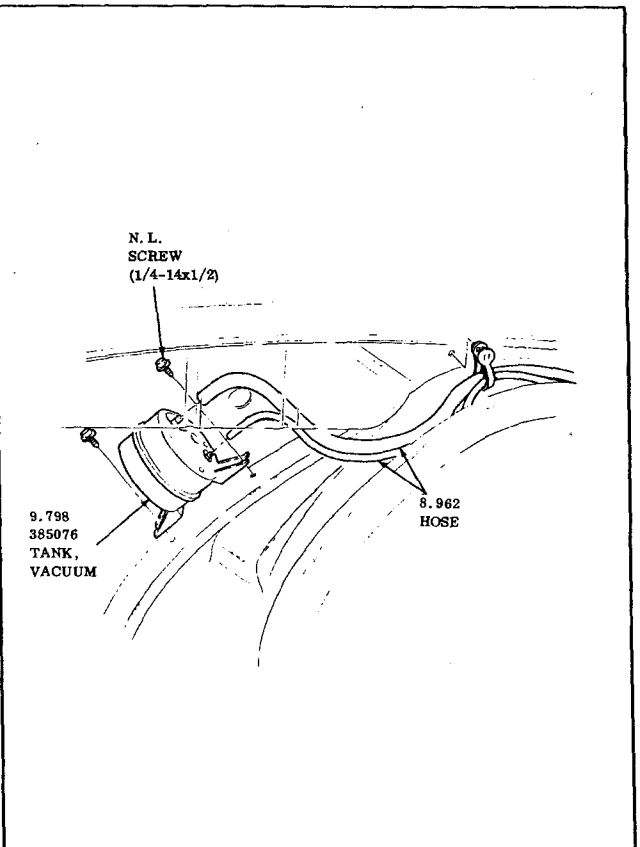

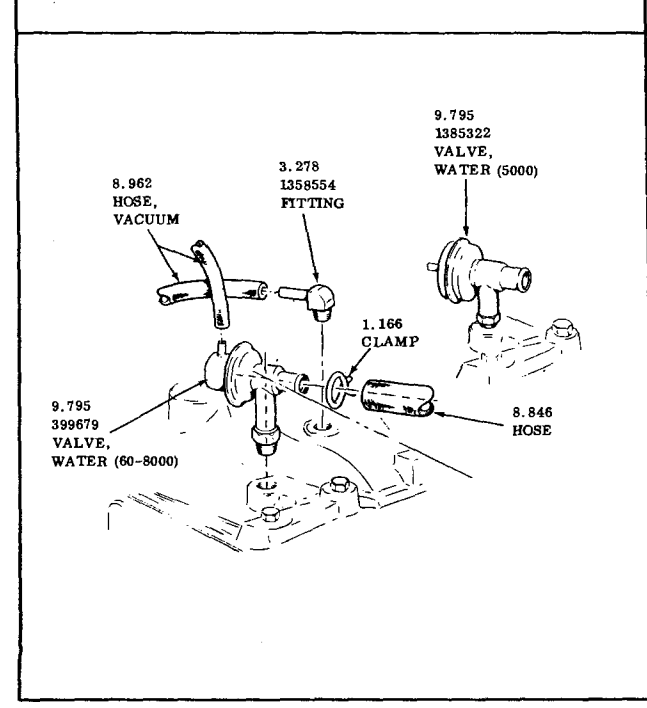

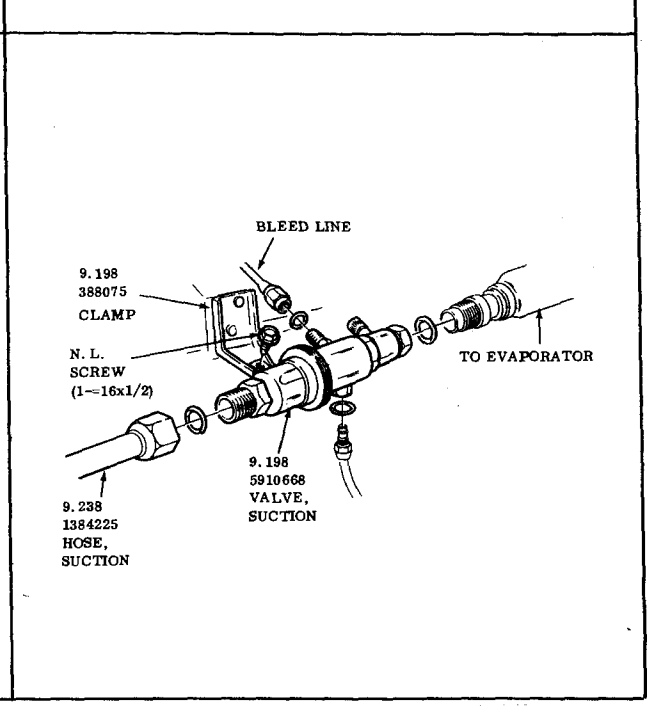

AIR CONDITIONING ENGINE UNITS
1968-50-60-8000

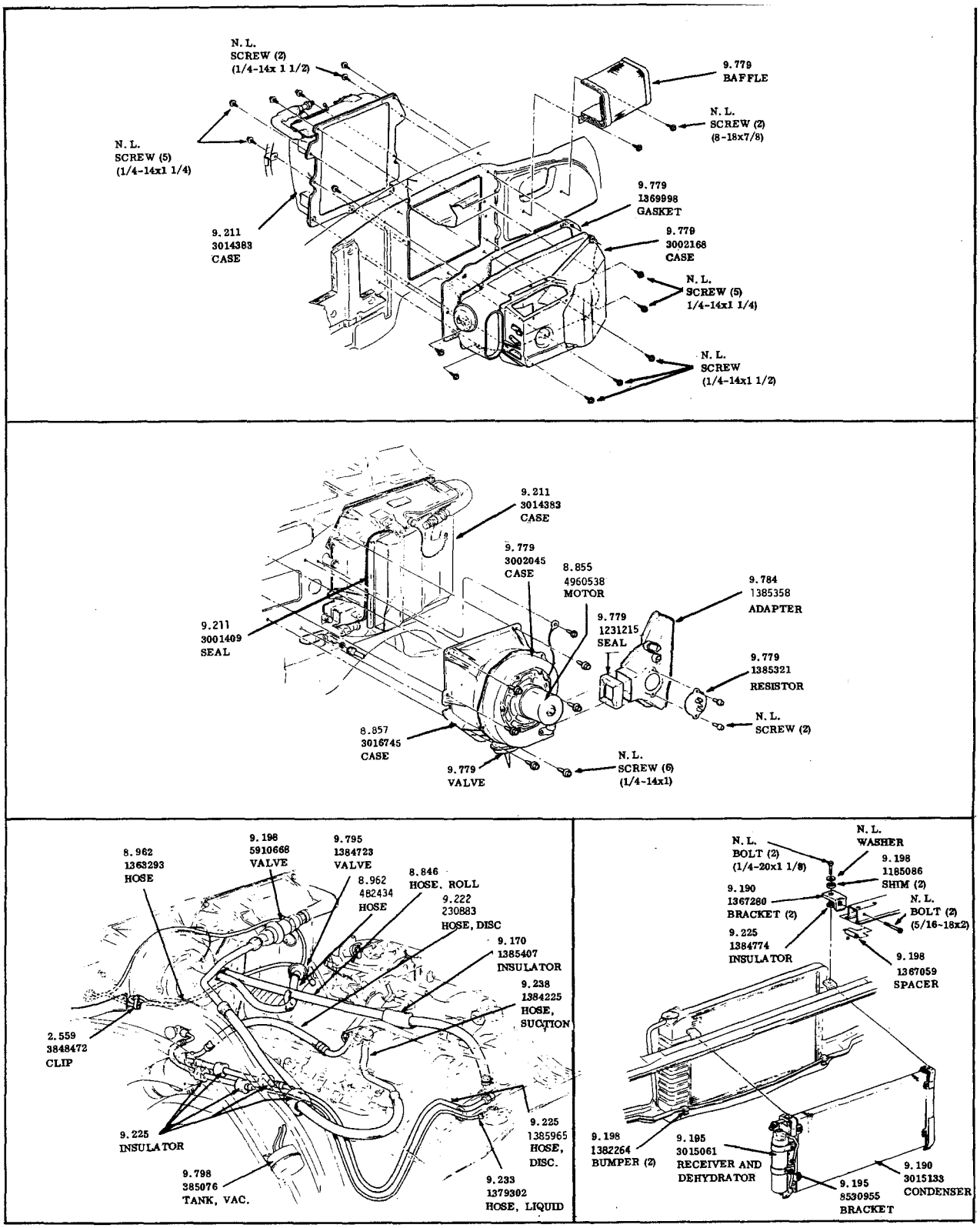

AIR CONDITIONING DASH UNITS
1968-50-60-8000

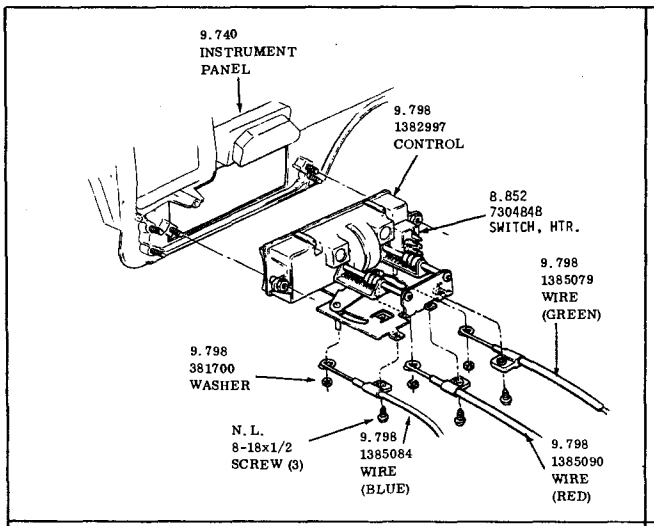

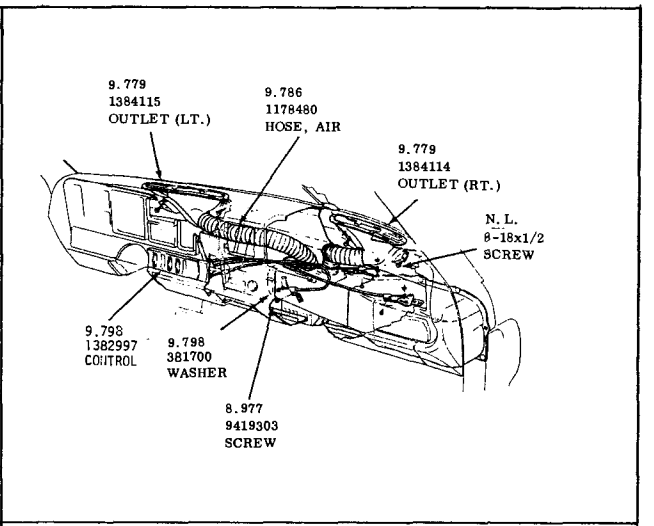

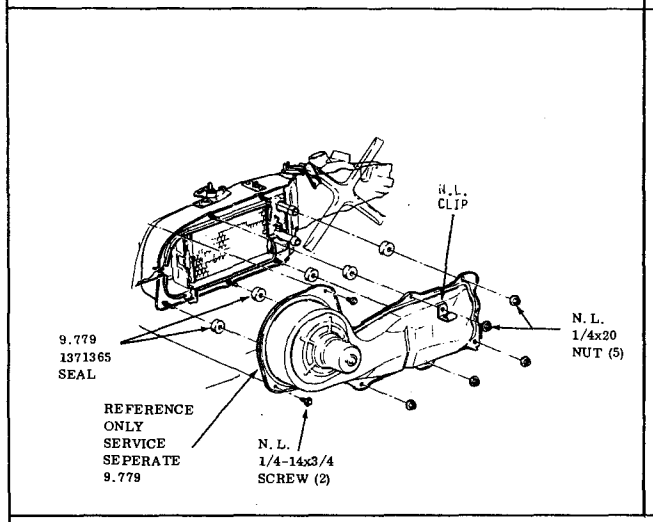

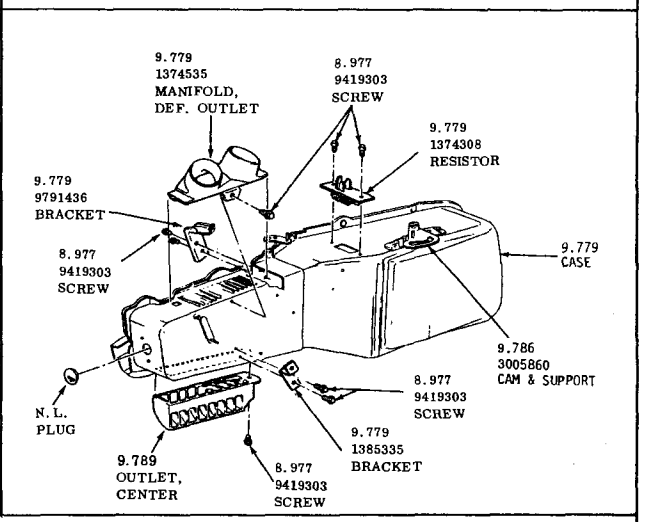

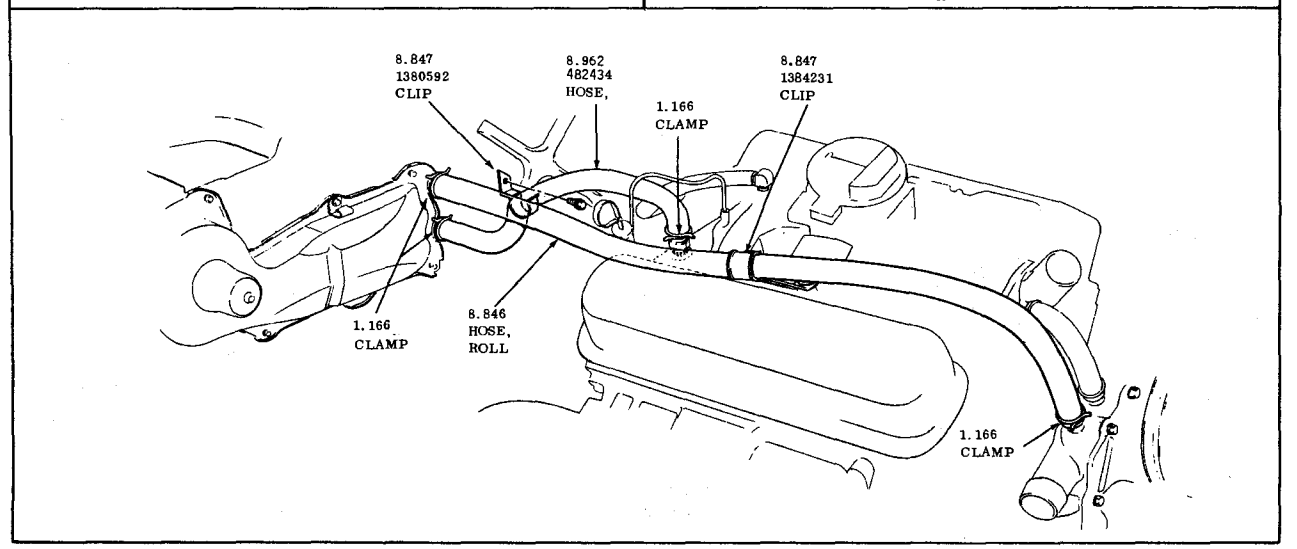

HEATER & DEFROSTER
1968 - 50-60-8000

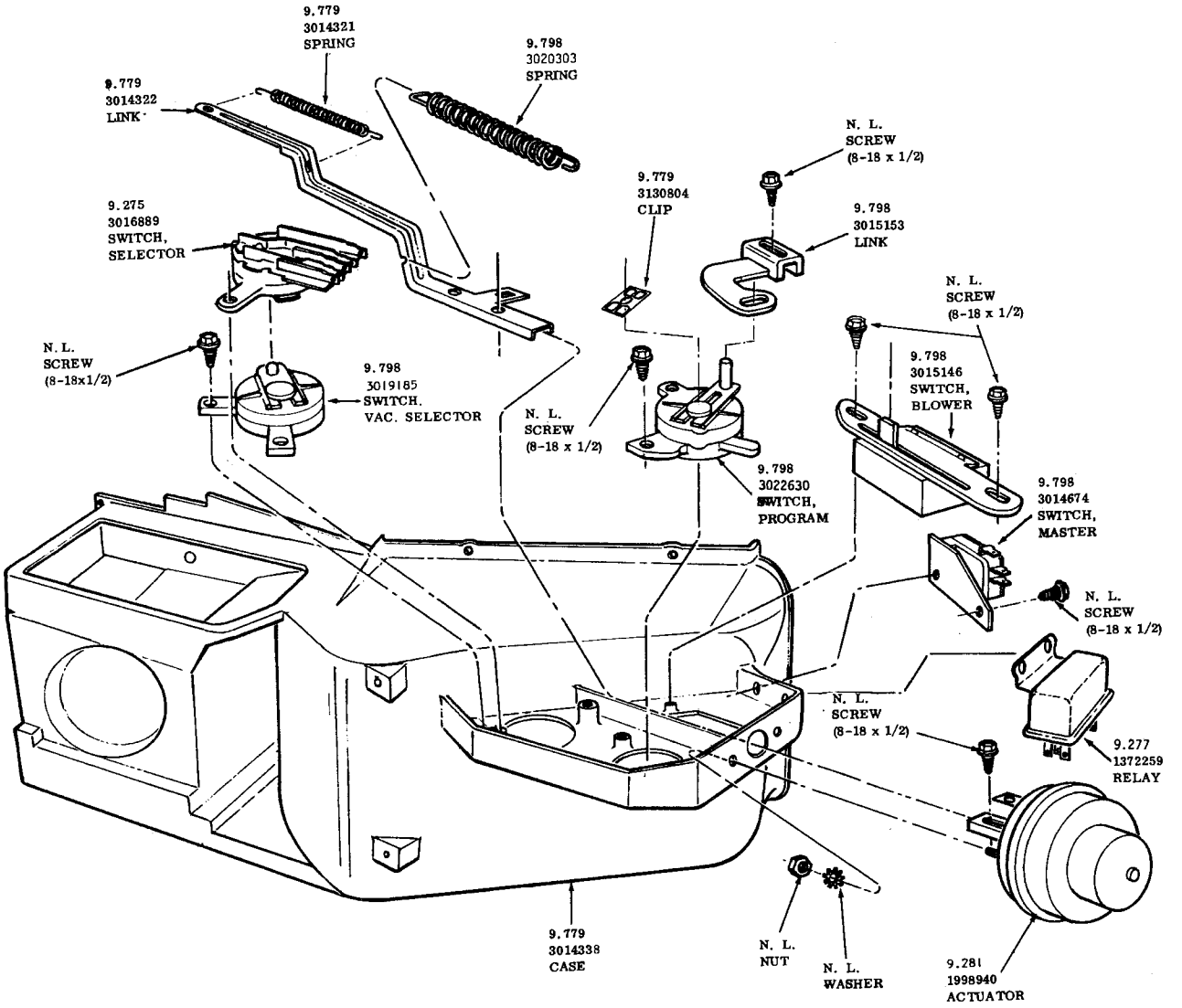

AUTOMATIC CLIMATIC CONTROL
1968 - LESABBRA - WILDCAT - ELECTRA 225

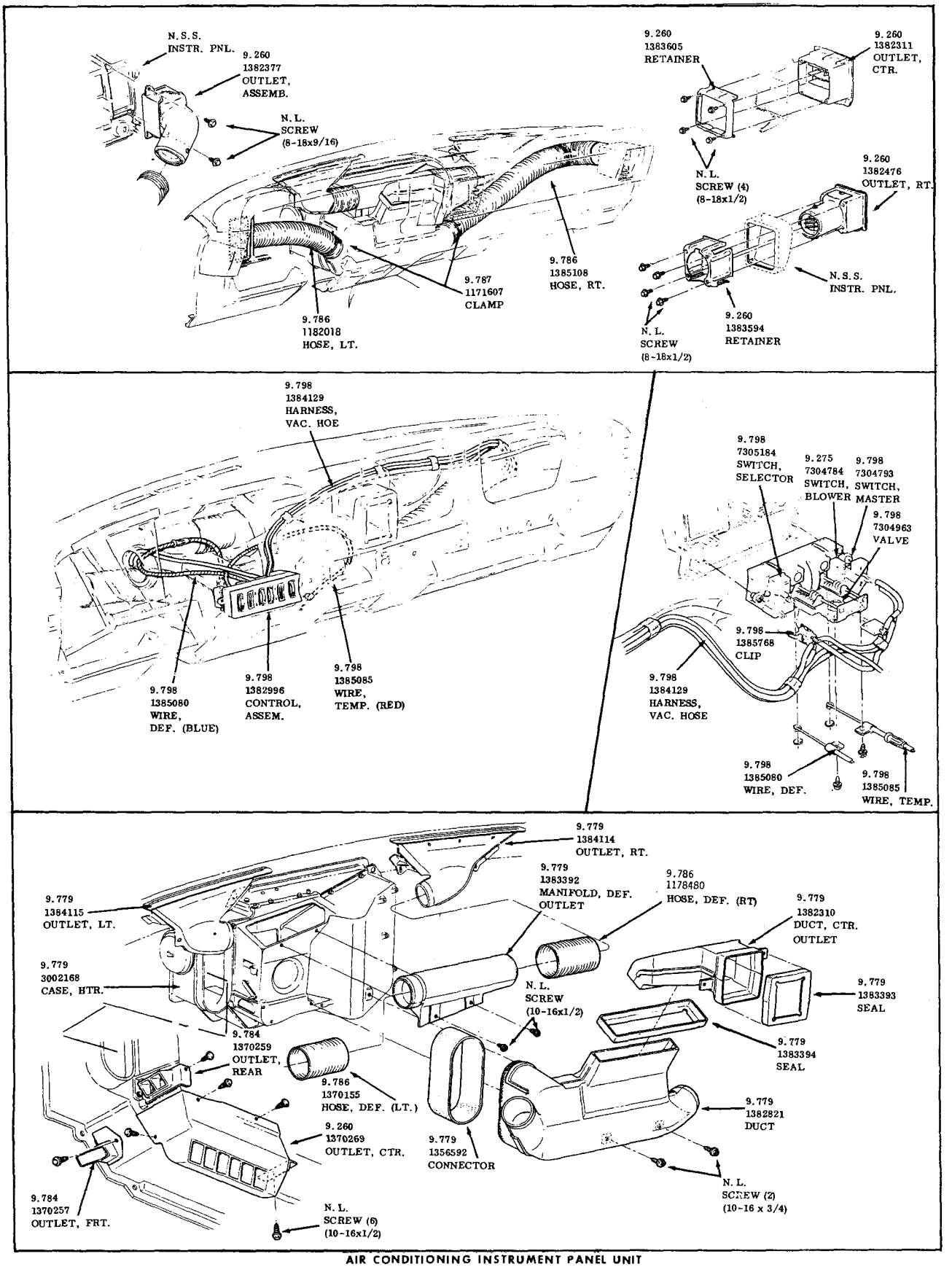

AIR CONDITIONING INSTRUMENT PANEL UNIT
1968-50-60-8000

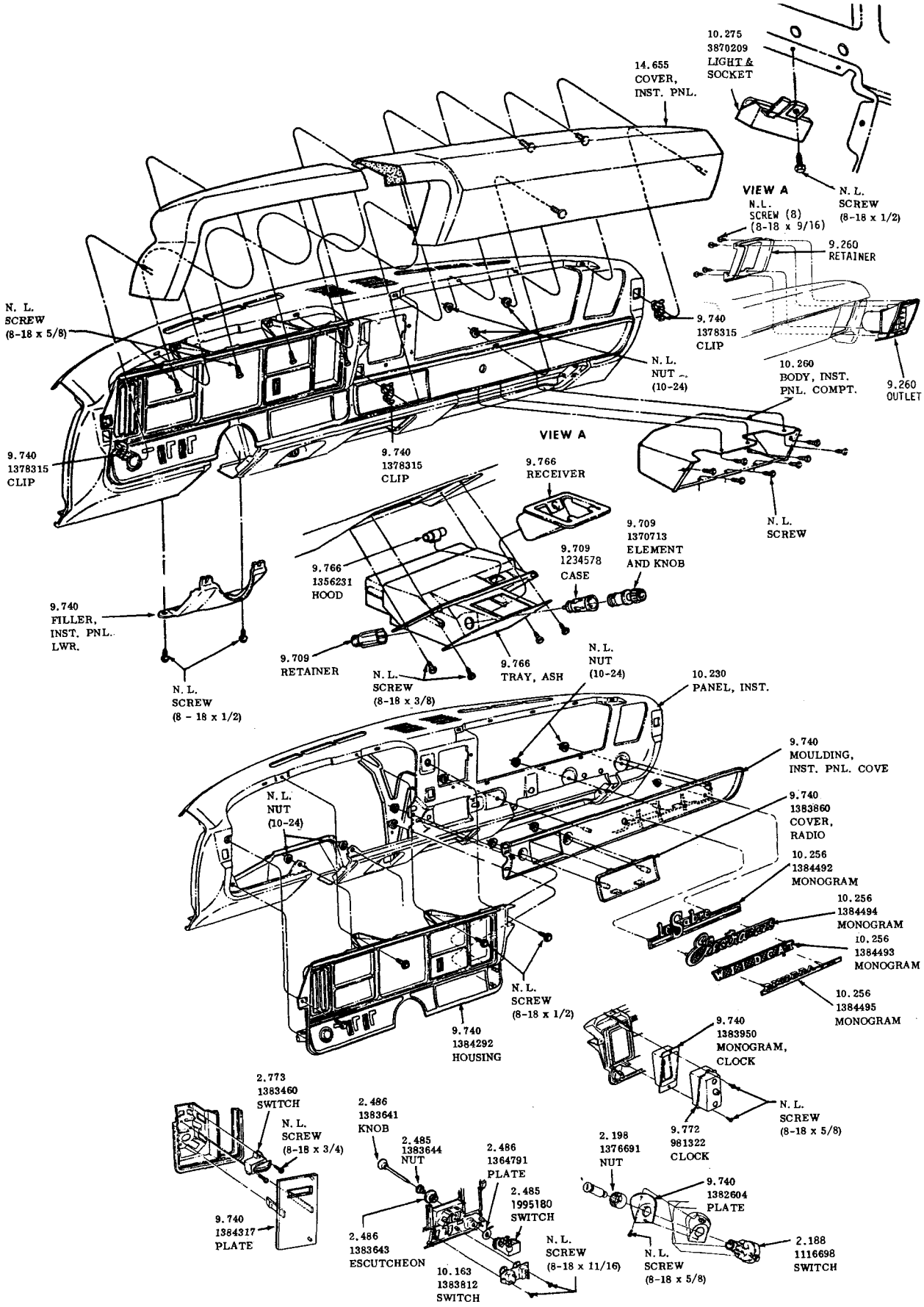

INSTRUMENT PANEL
1968-50-60-80-9000

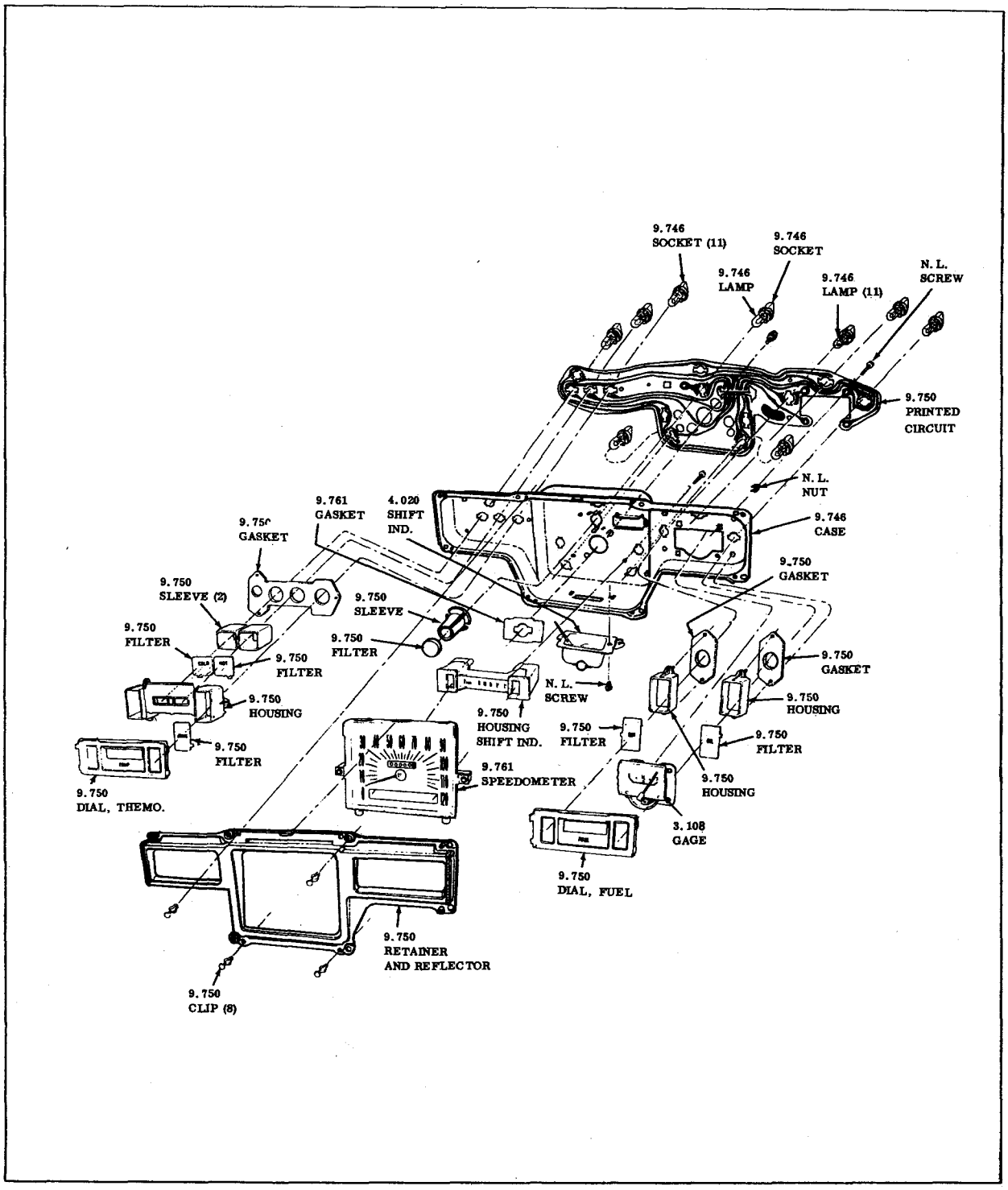

TYPICAL
INSTRUMENT CLUSTER
1968-1969 -50-60-8000

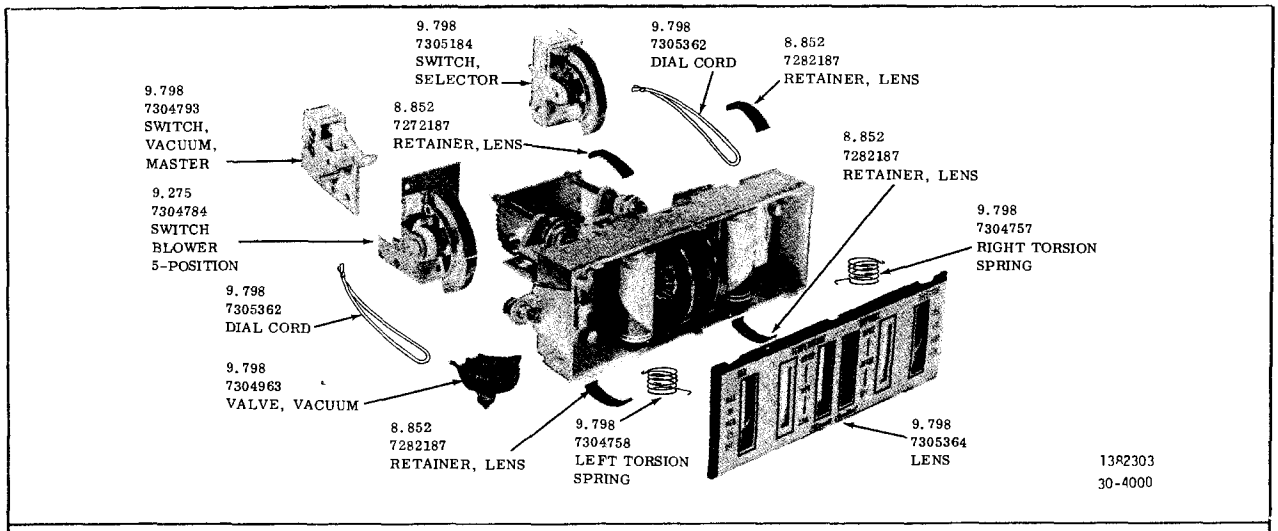

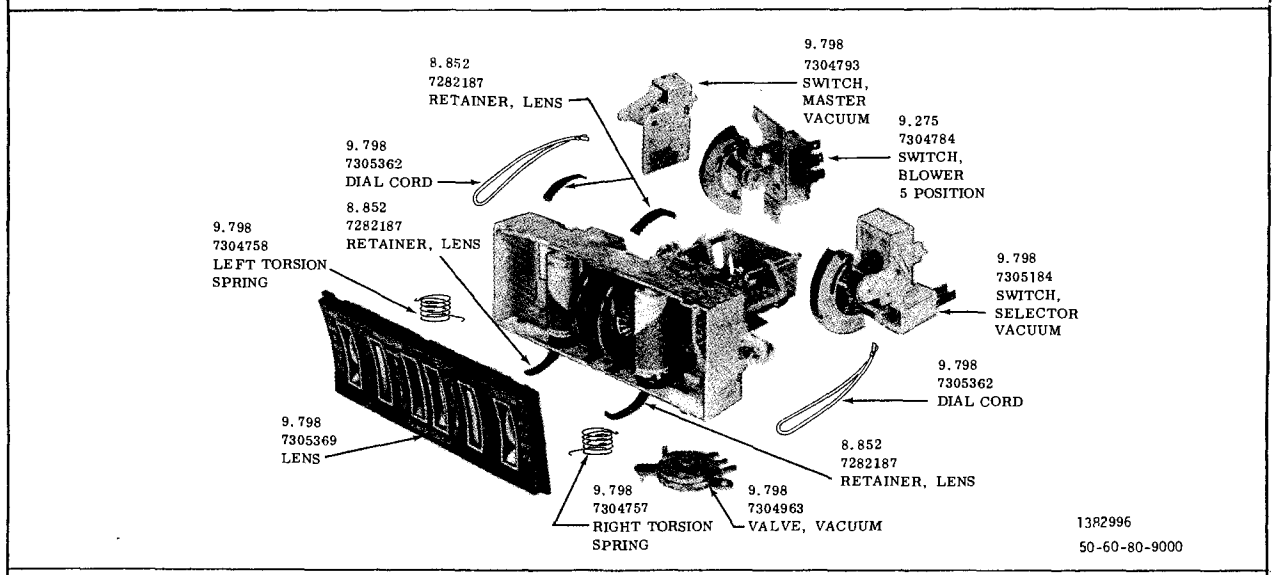

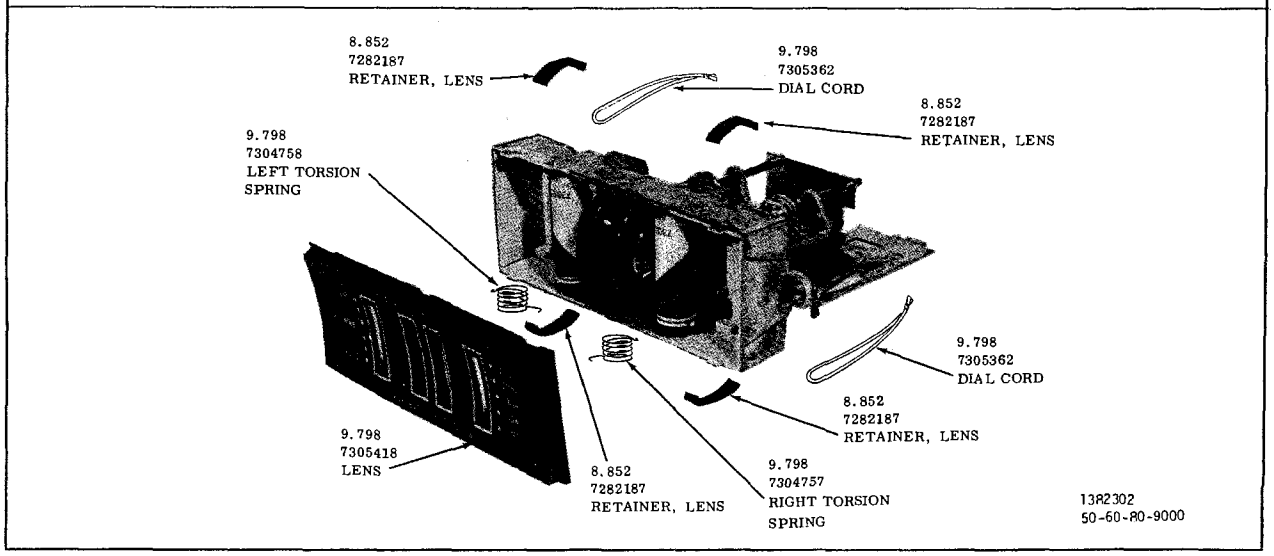

HEATER & AIR CONDITIONING CONTROL
1968-ALL

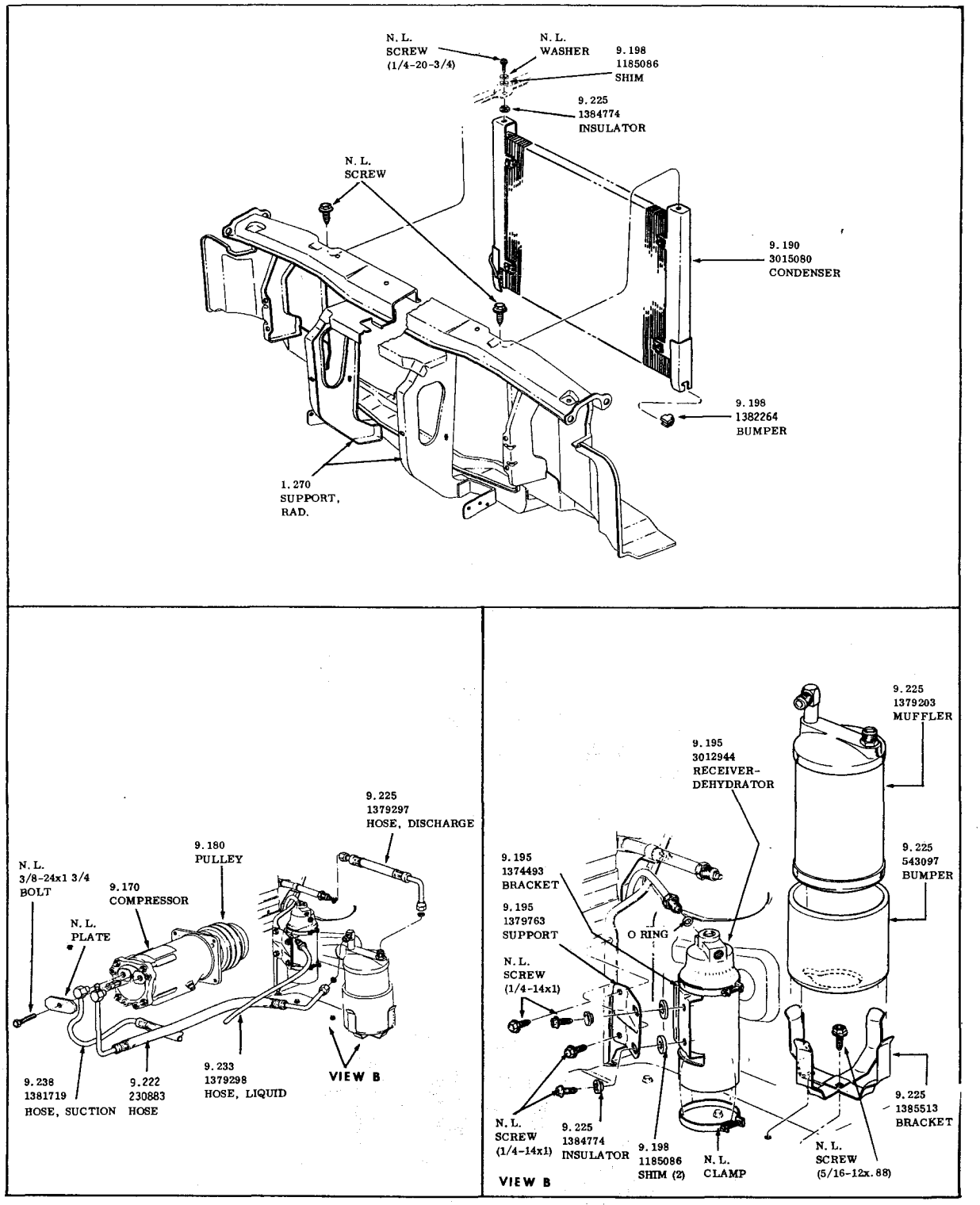

A/C HOSES, RECEIEVER DEHYDRATOR CONDENSER & MUFFLER
1968 - 9000

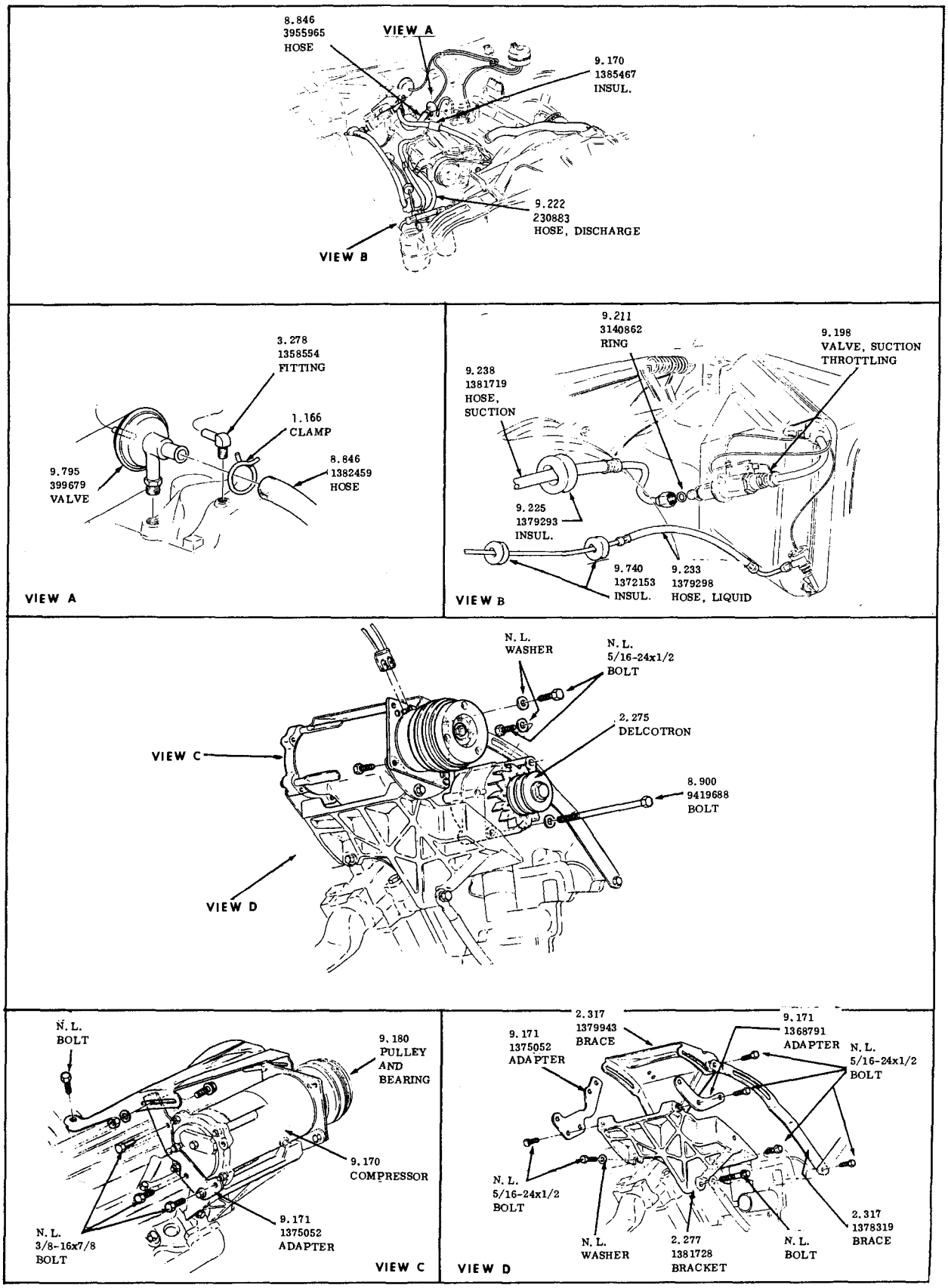

A/ C HOSES, DELCOTRON & COMPRESSOR MOUNTING
1968 - 9000

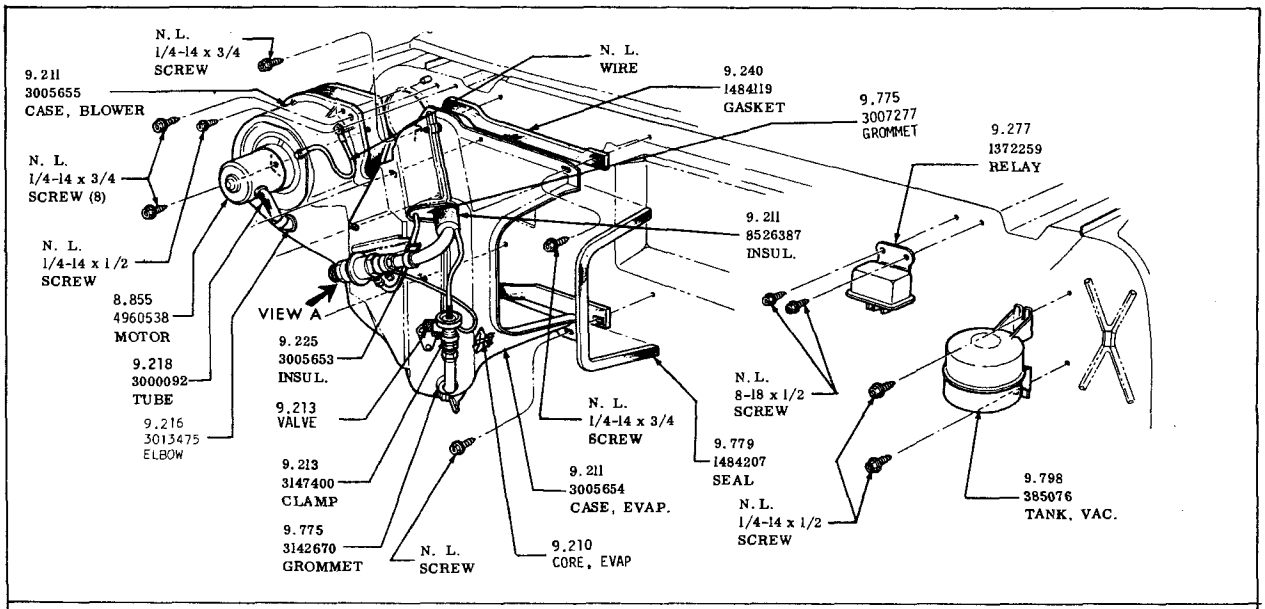

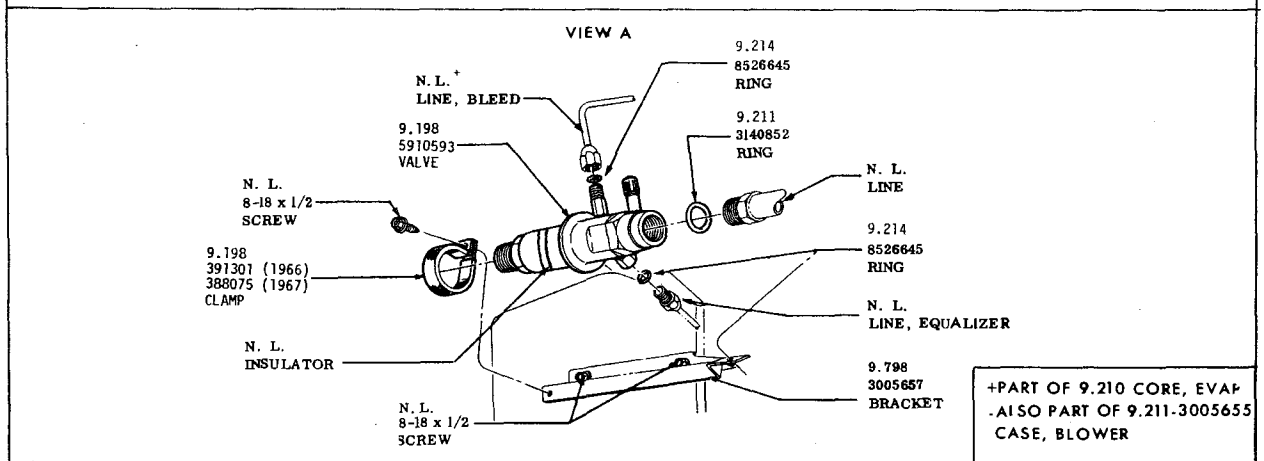

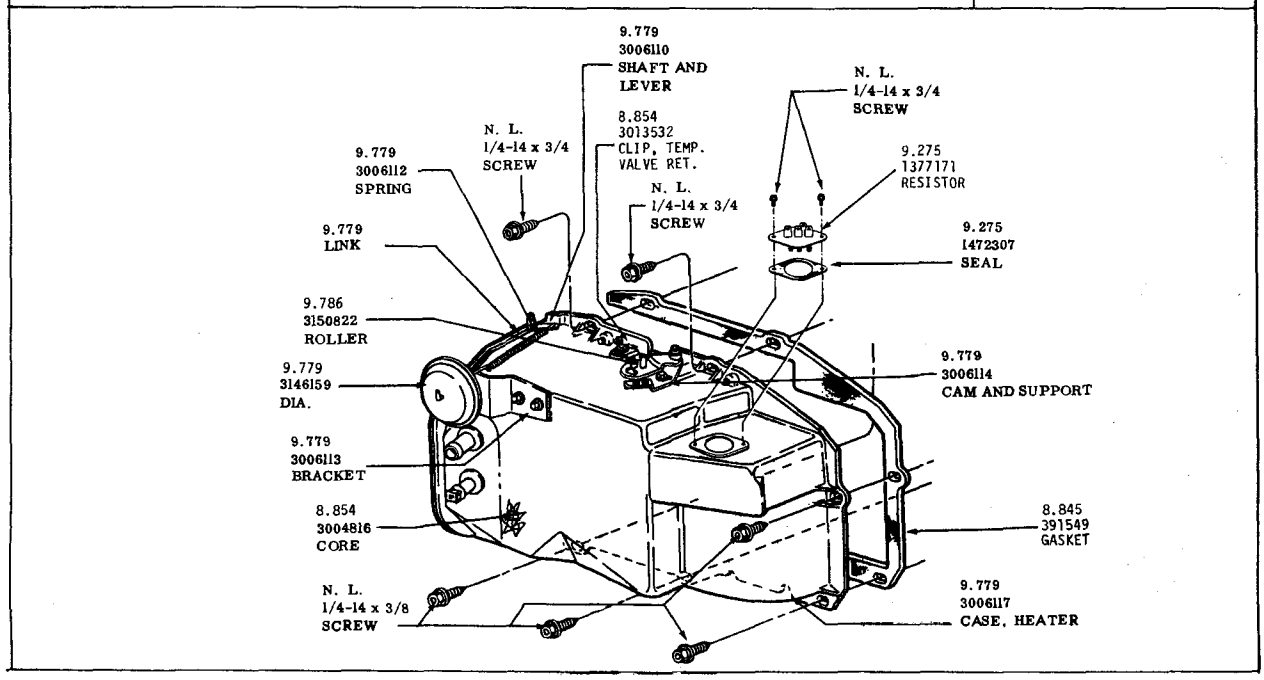

AIR CONDITIONING
DASH UNITS
1966-1968 -RIVIERA

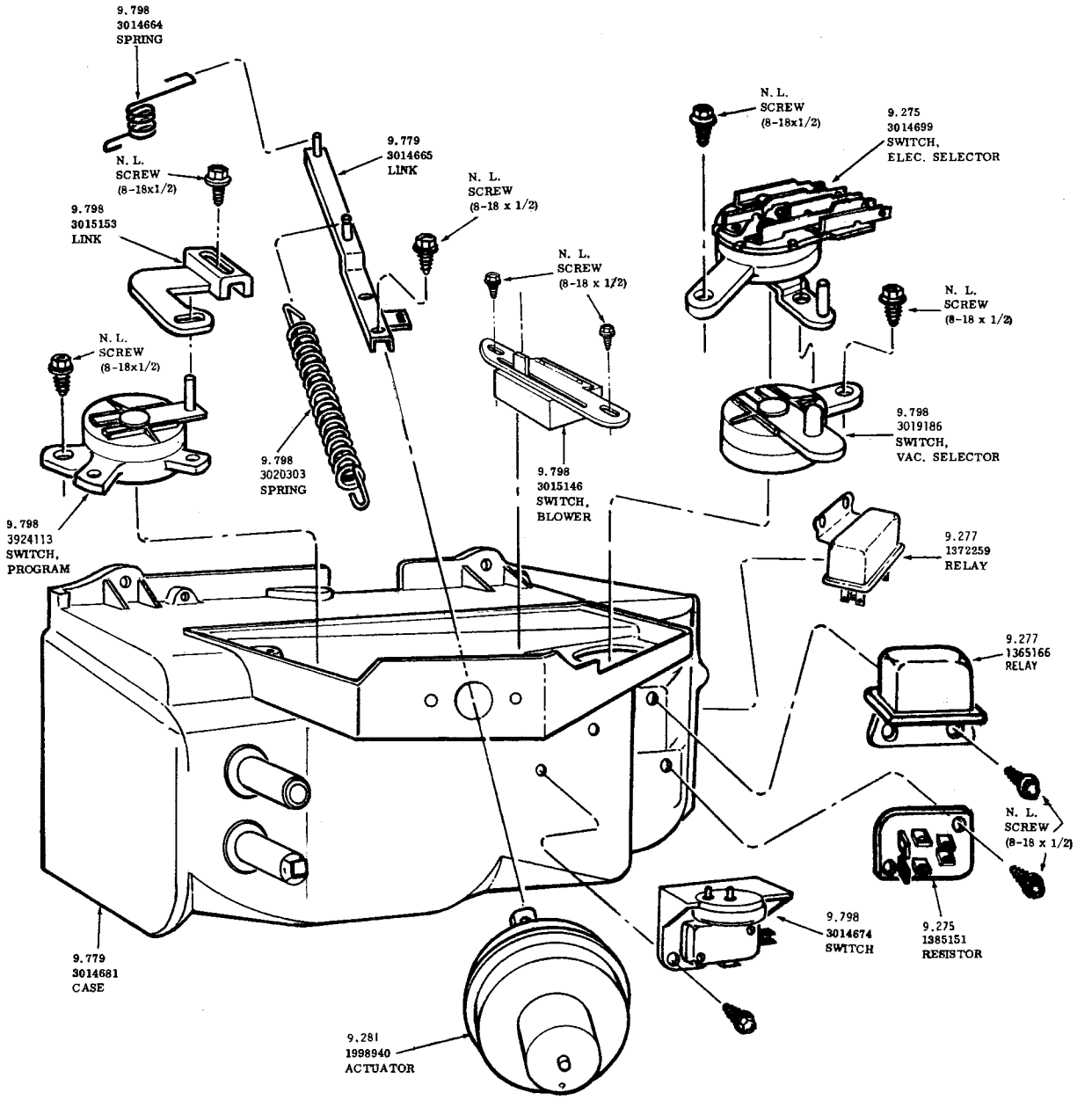

AUTOMATIC CLIMATIC CONTROL
1968 RIVIERA

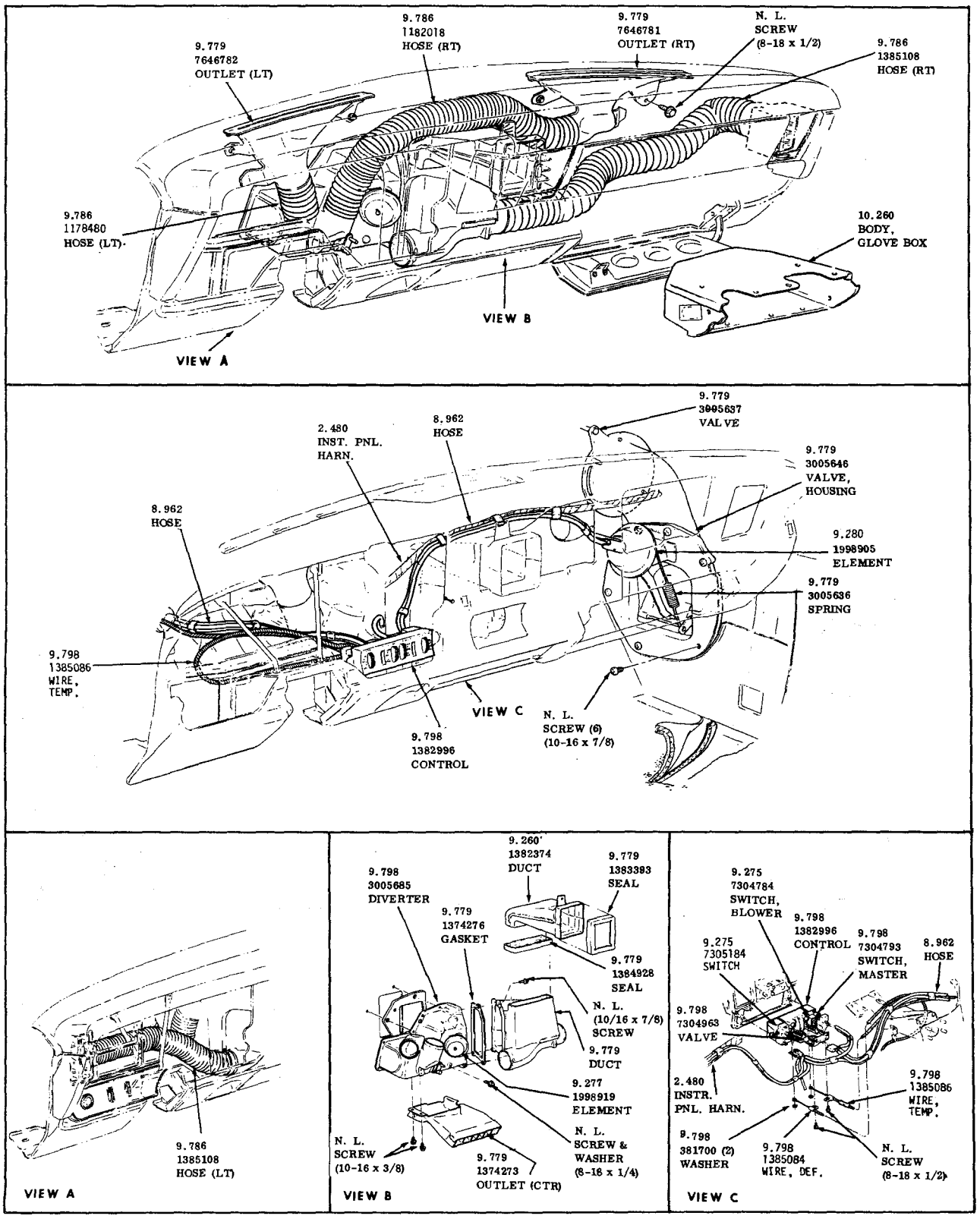

AIR CONDITION INSTRUMENT PANEL UNIT
1968 RIVIERA

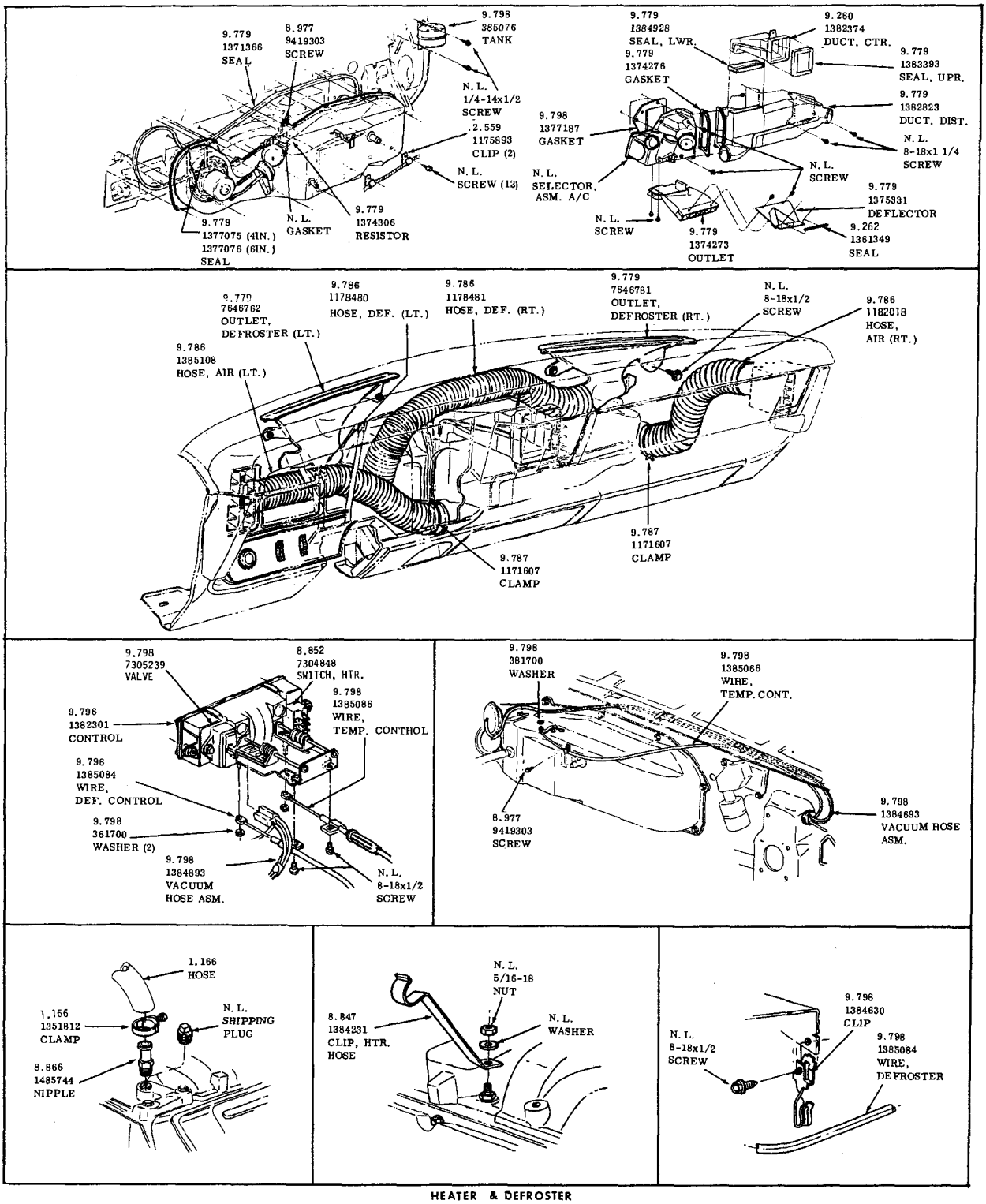

HEATER & DEFROSTER
1968 RIVIERA (LESS A/C.)

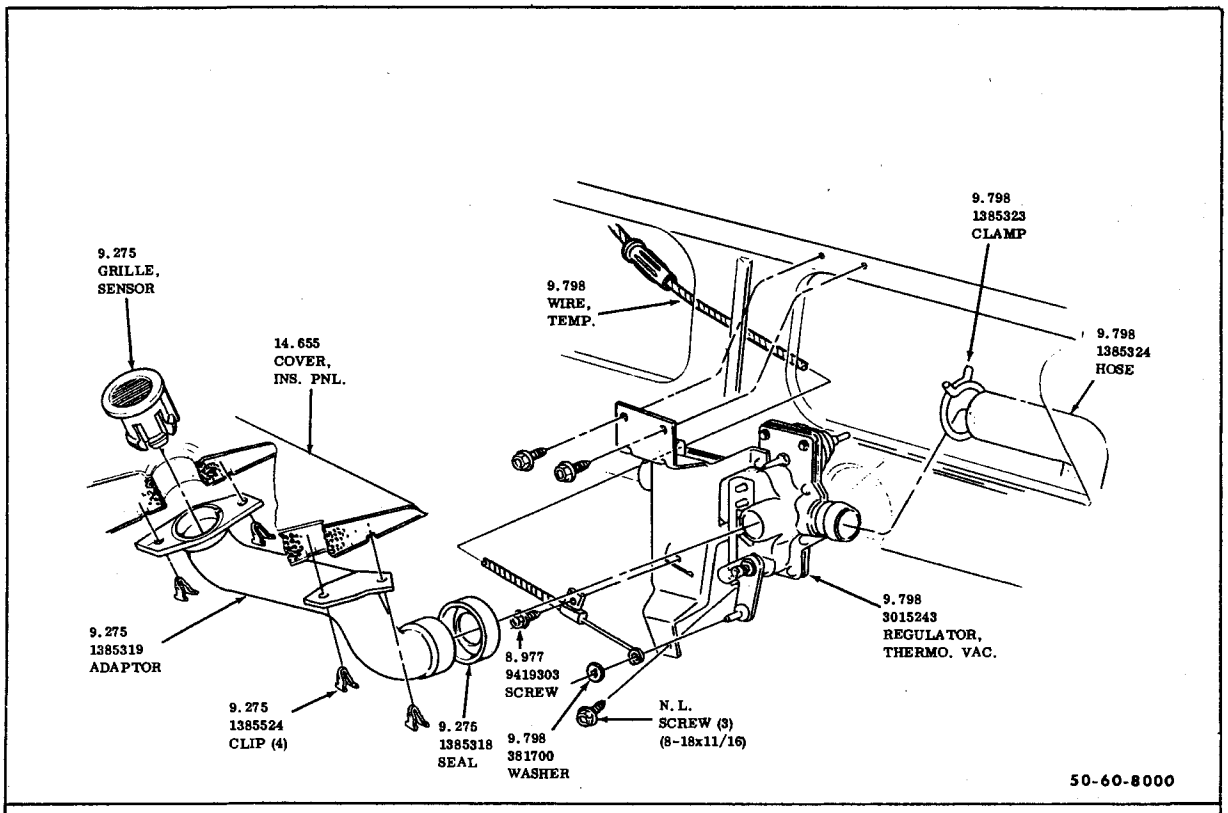

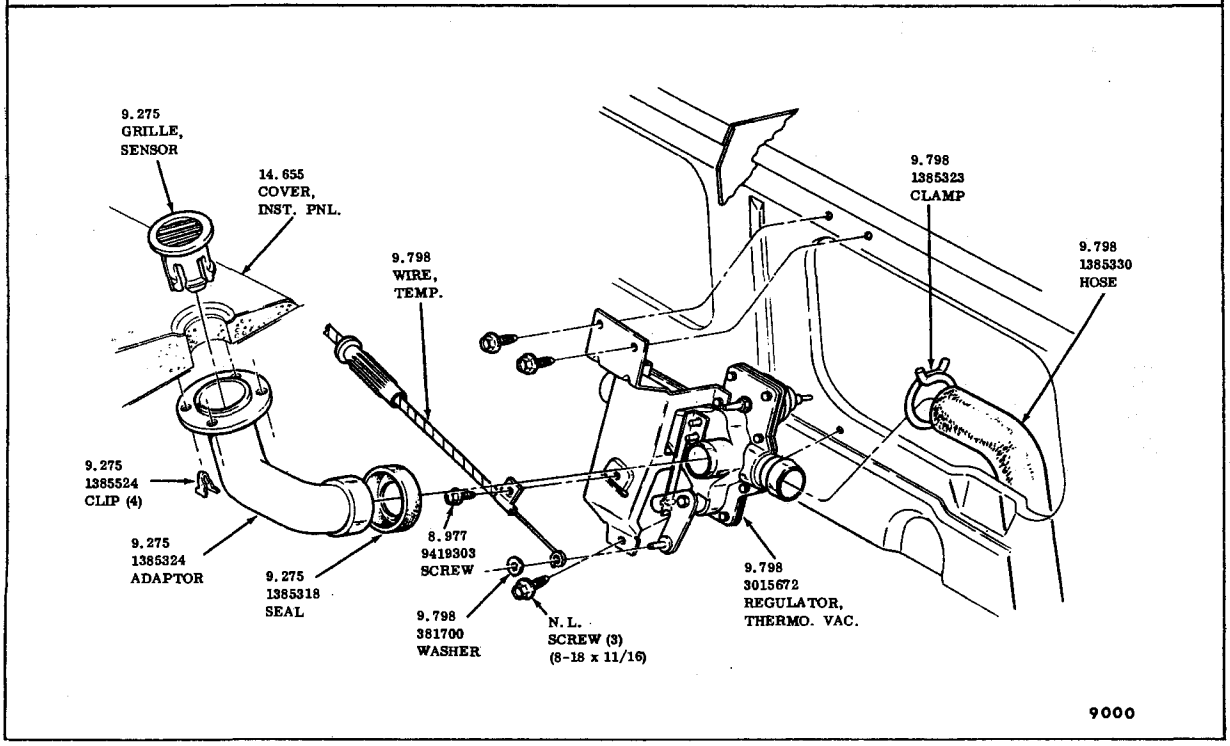

AUTOMATIC CLIMATE CONTROL
REGULATOR, THERMOSTATIC VACCUM
1968 - 50-60-80-9000

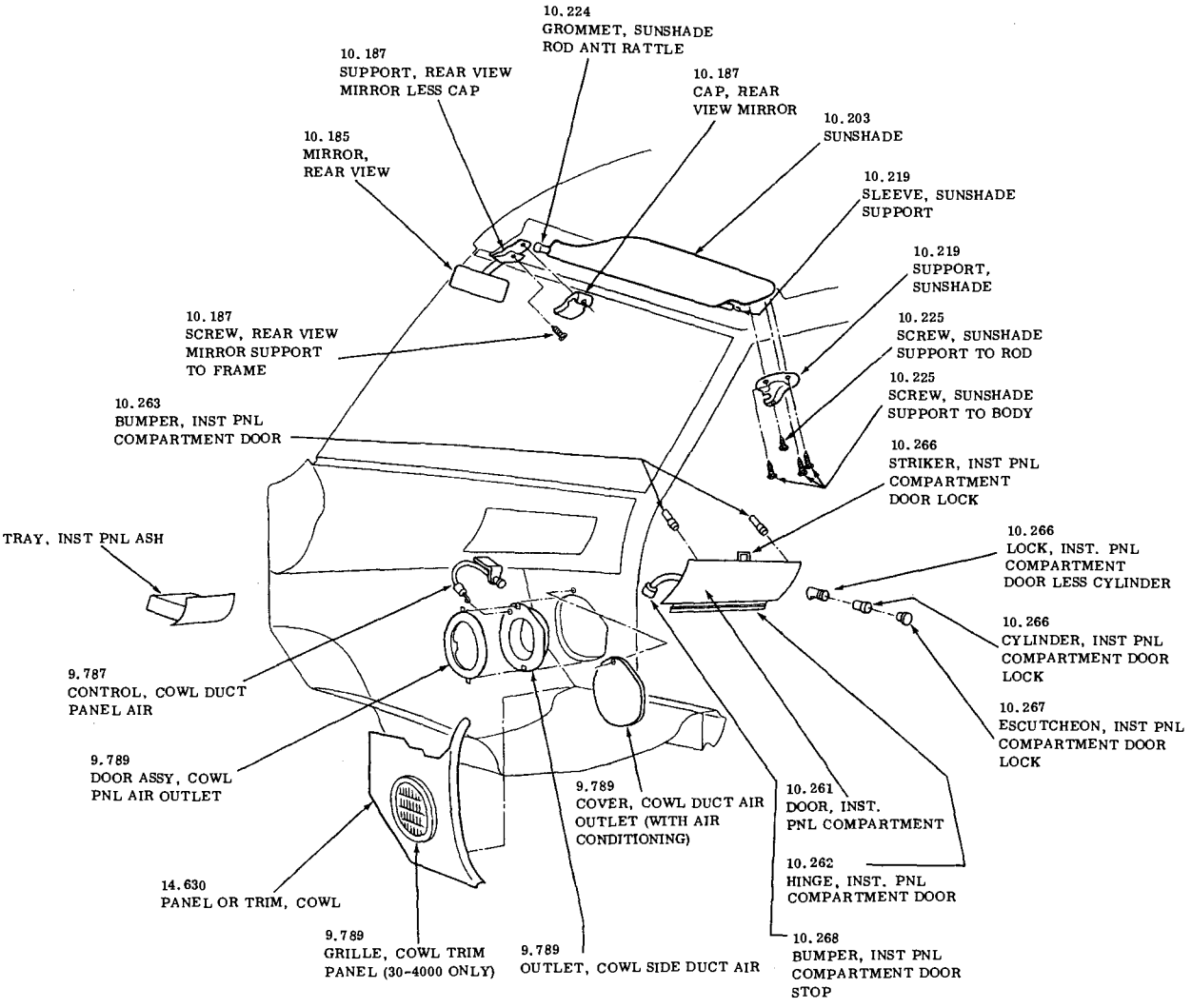

BODY FRONT END HARDWARE
1968 ALL

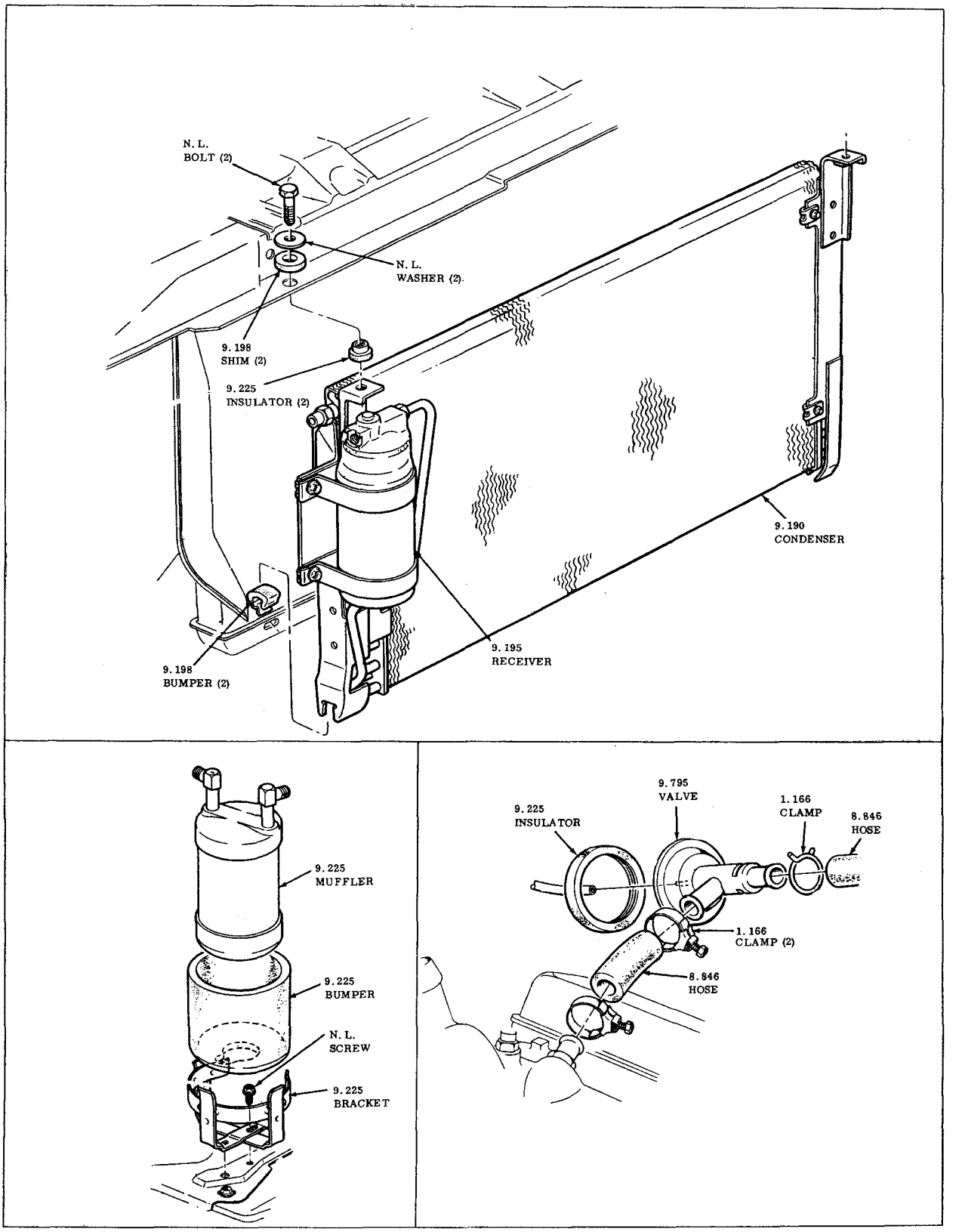

A/C RECEIVER DEHYDRATOR, MUFFLER, & WATER VALVE

1969-30-4000

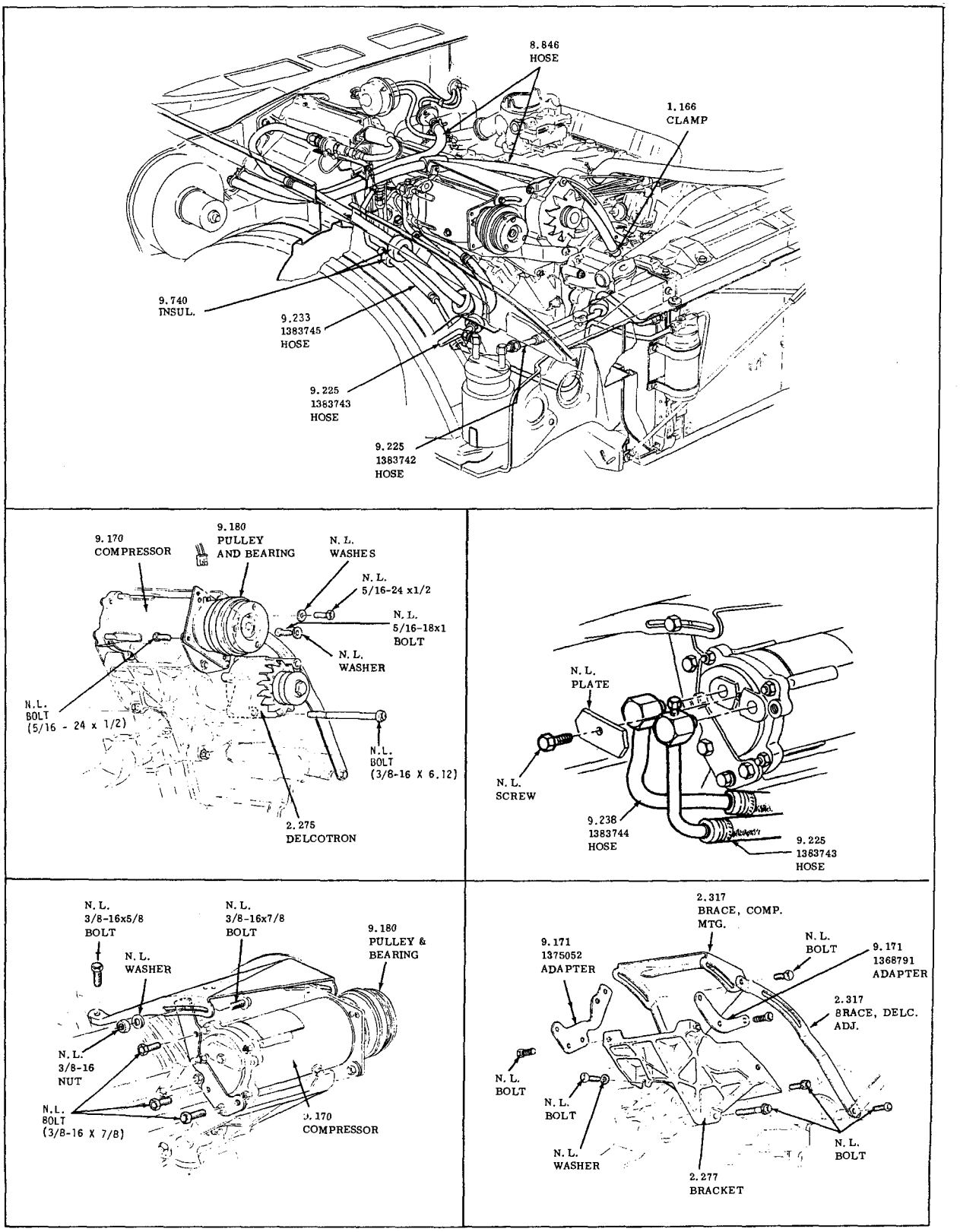

A/C HOSE, COMPRESSOR & DELCOTRON MOUNTINGS
1968-1969 - 30-4000

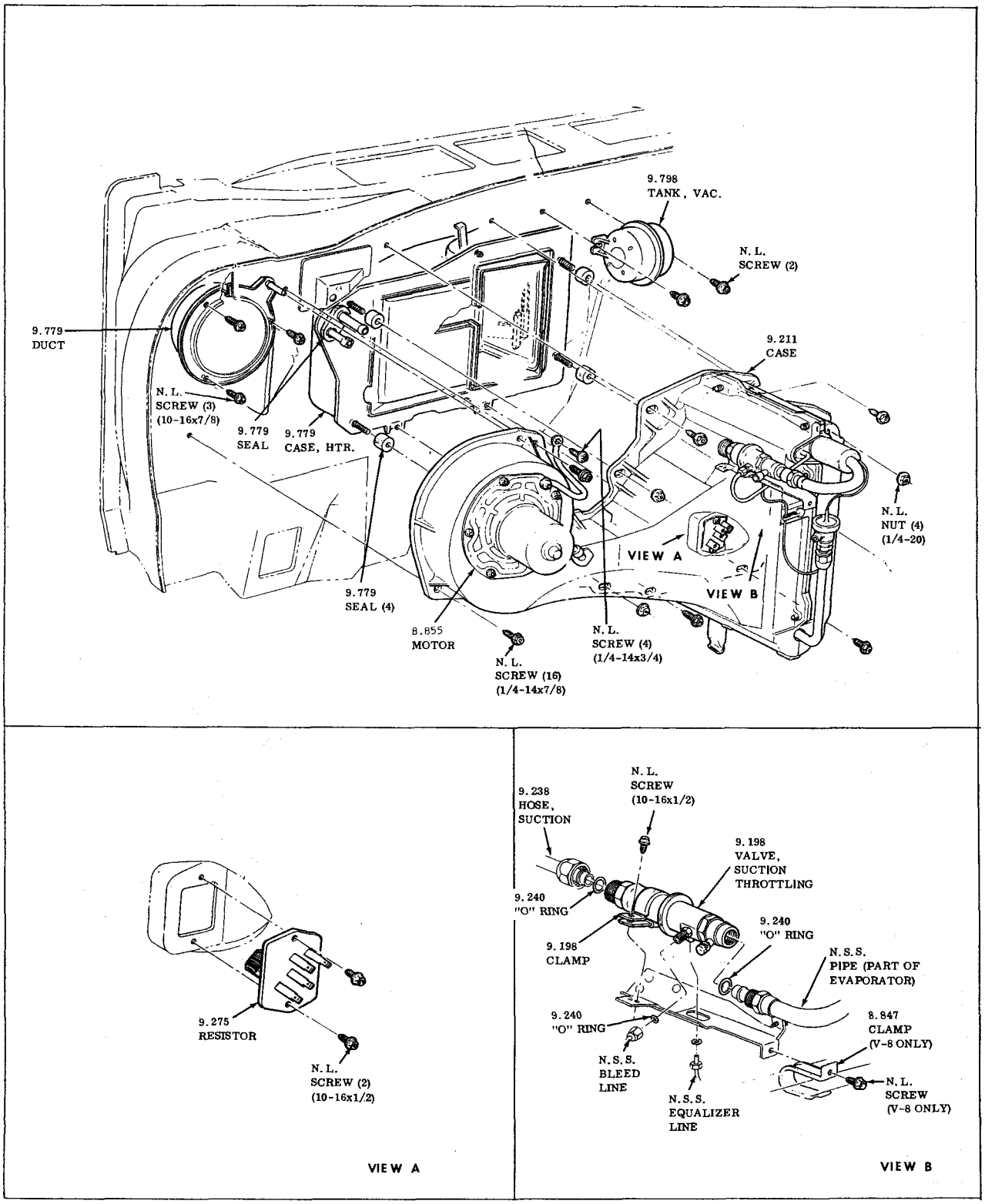

AIR CONDITIONING EVAPORATOR & BLOWER
1969-1970 -30-4000

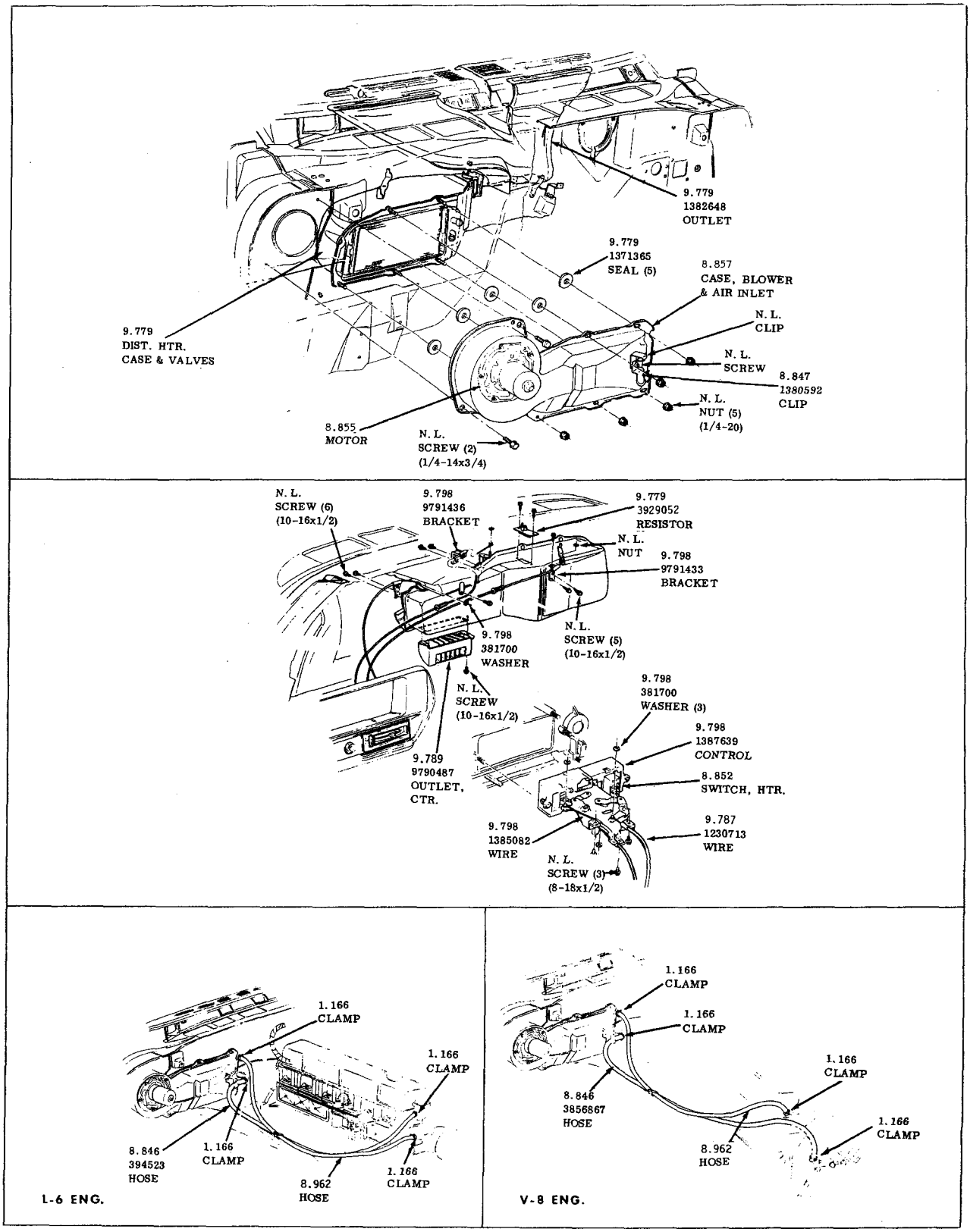

HEATER & DEFROSTER

1969-1972-30-4000

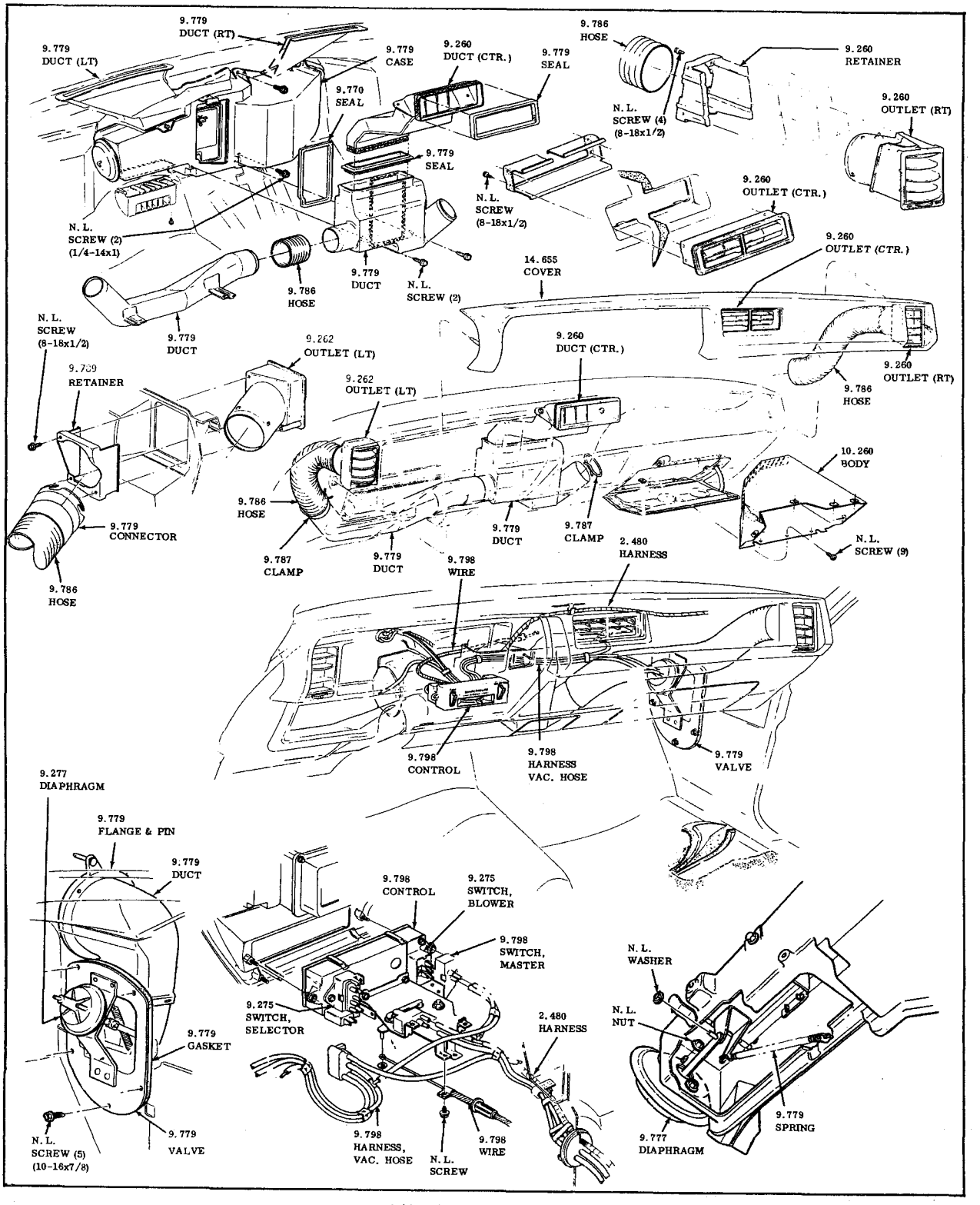

A/C INSTRUMENT PANEL UNITS
1969-30-4000

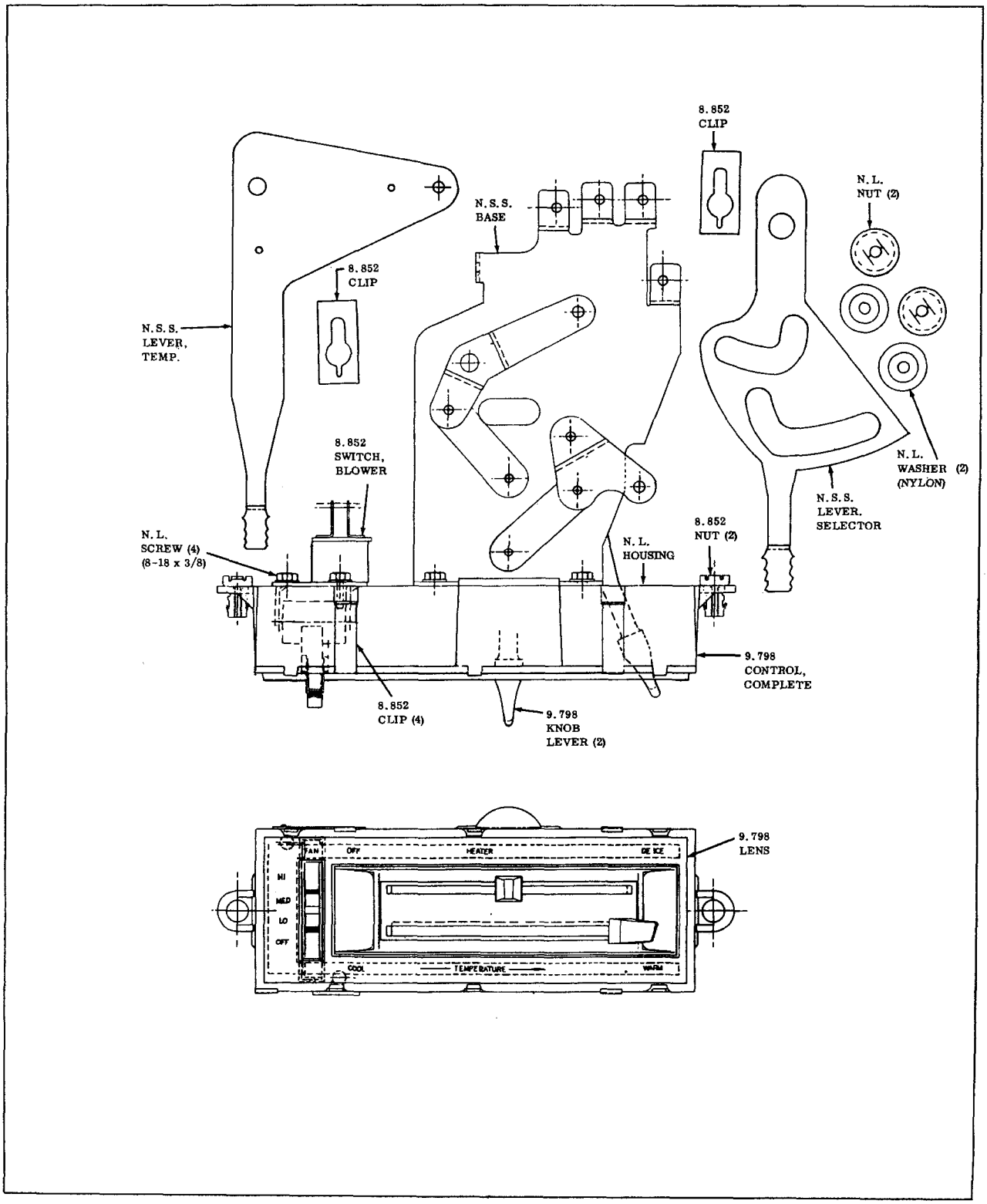

HEATER & DEFROSTER CONTROL
1969-1972-30-4000

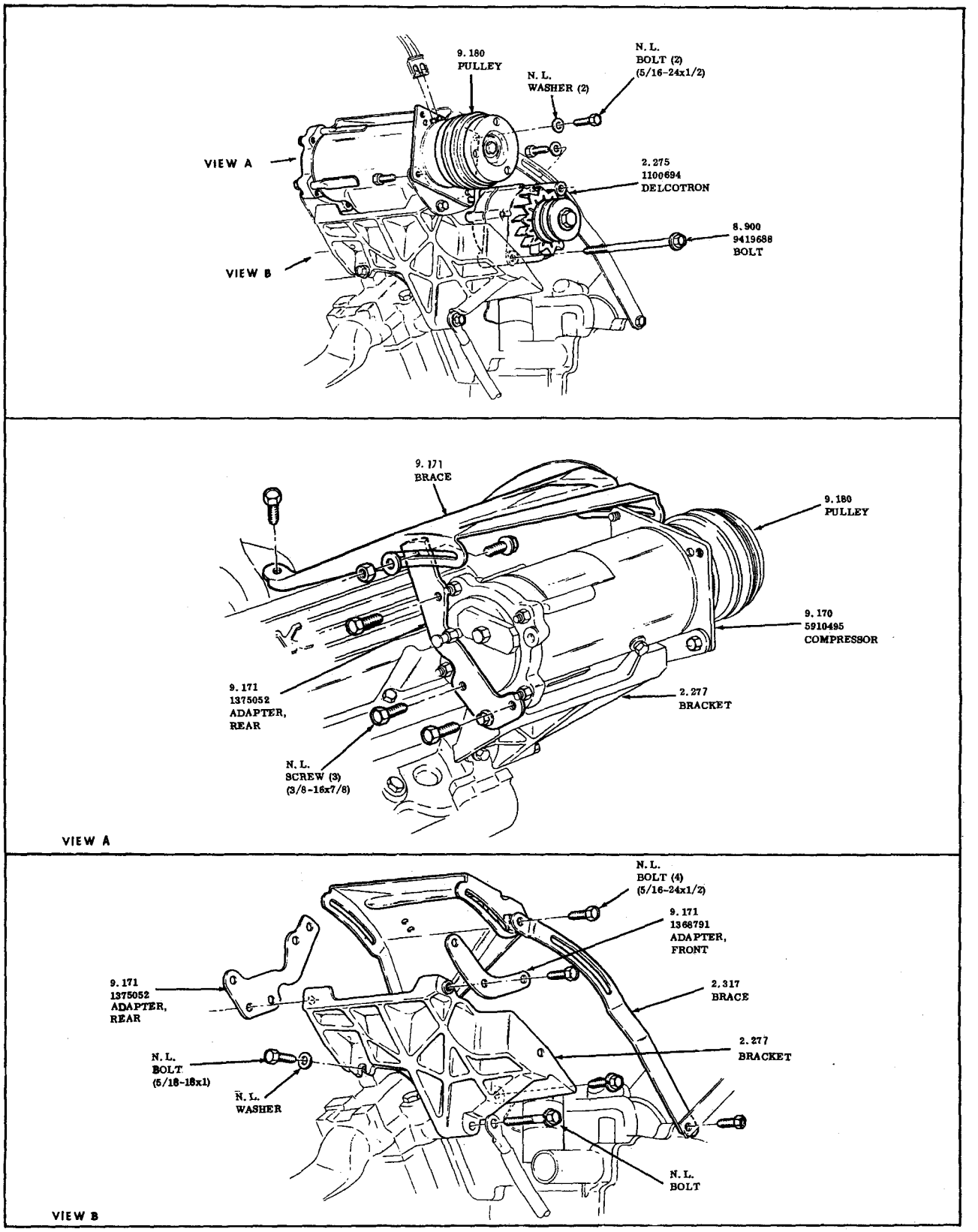

AIR CONDITIONING COMPRESSOR MOUNTING
1968-1970-50-60-8000

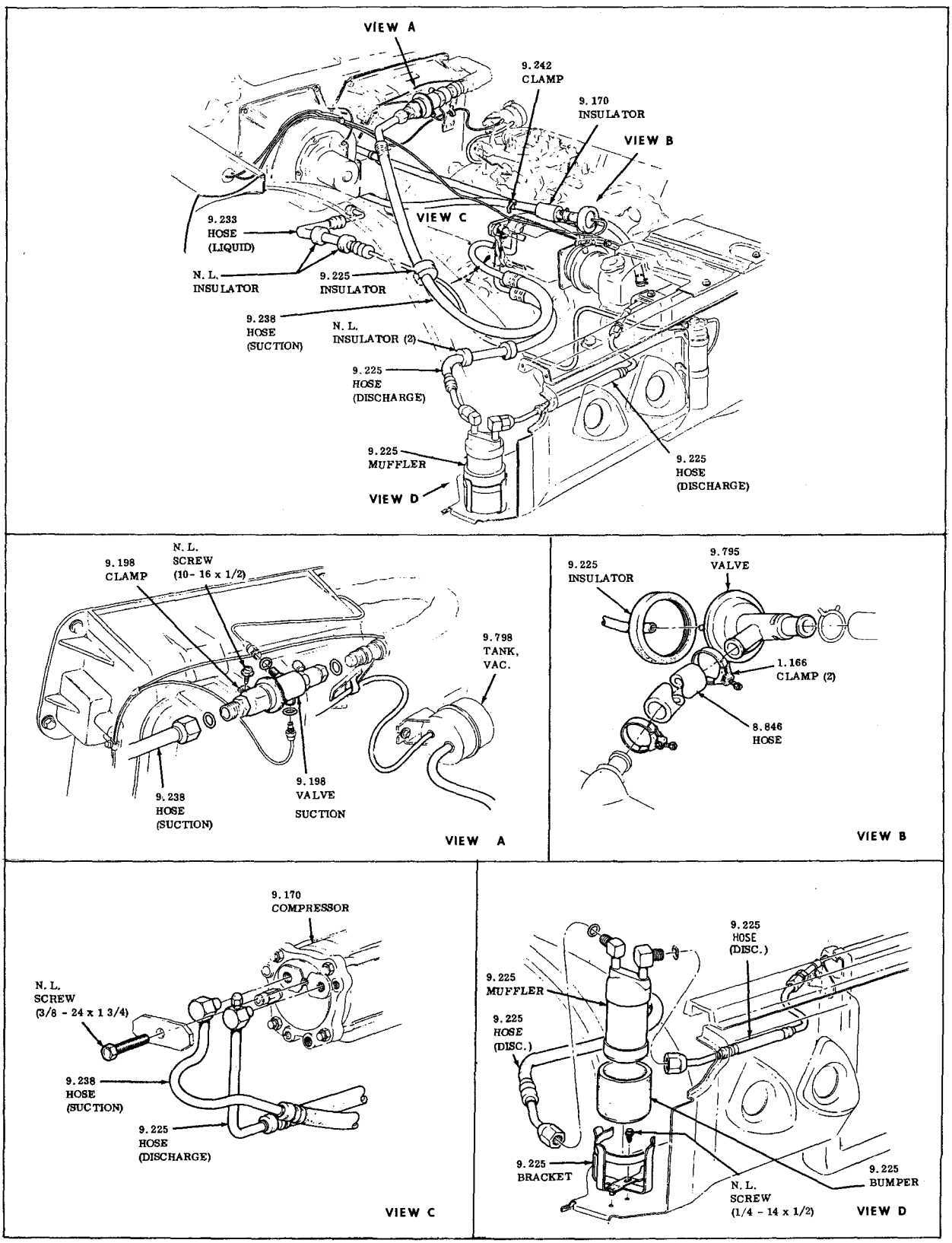

AIR CONDITIONING ENGINE UNITS
1949-50-60-8000

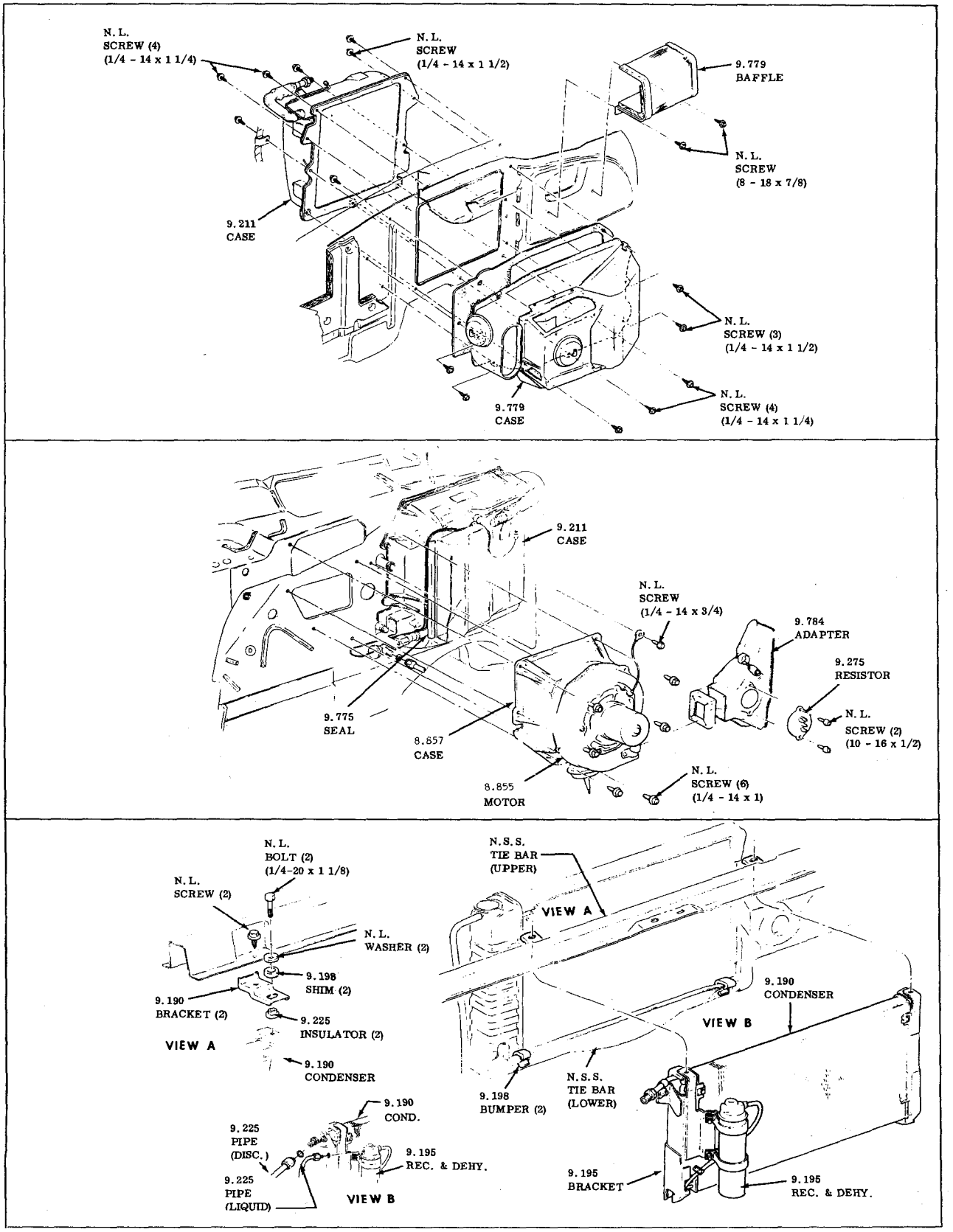

AIR CONDITIONING DASH UNITS
1969-1970 -50-60-8000

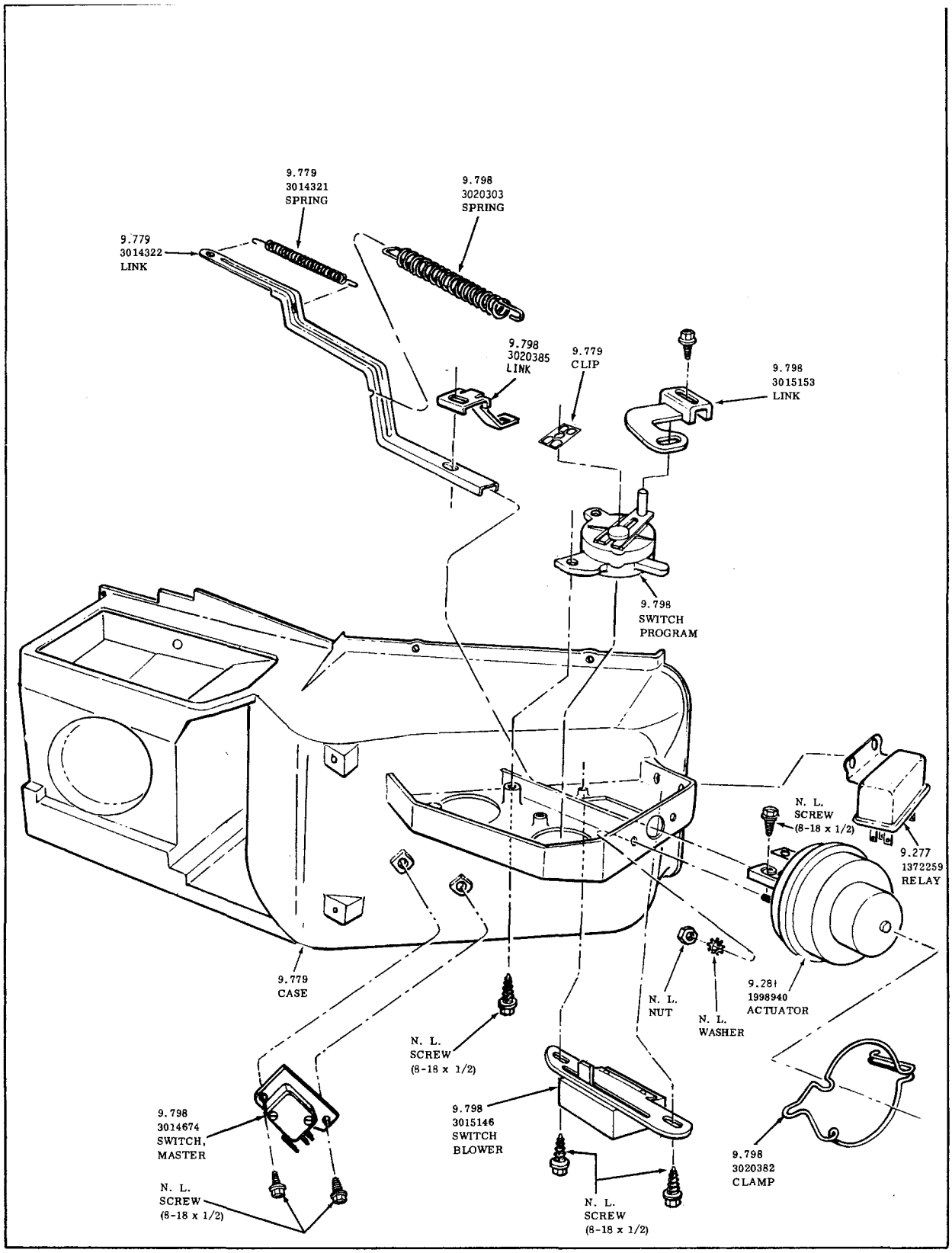

AUTOMATIC CLIMATIC CONTROL

1969-1970 -LESABRE-WILDCAT-ELECTRA 225

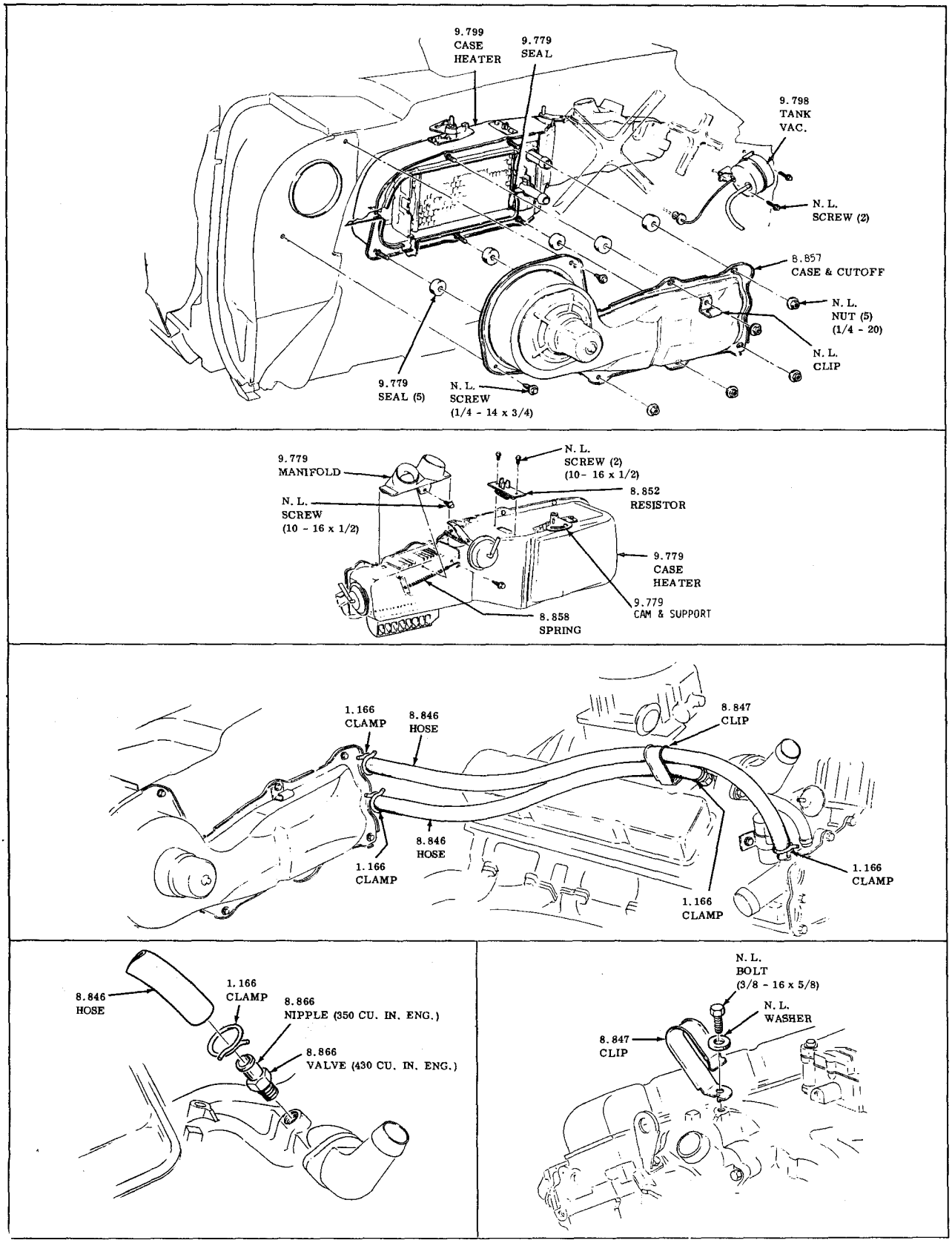

HEATER & DEFROSTER
1969-1970 -50-60-8000

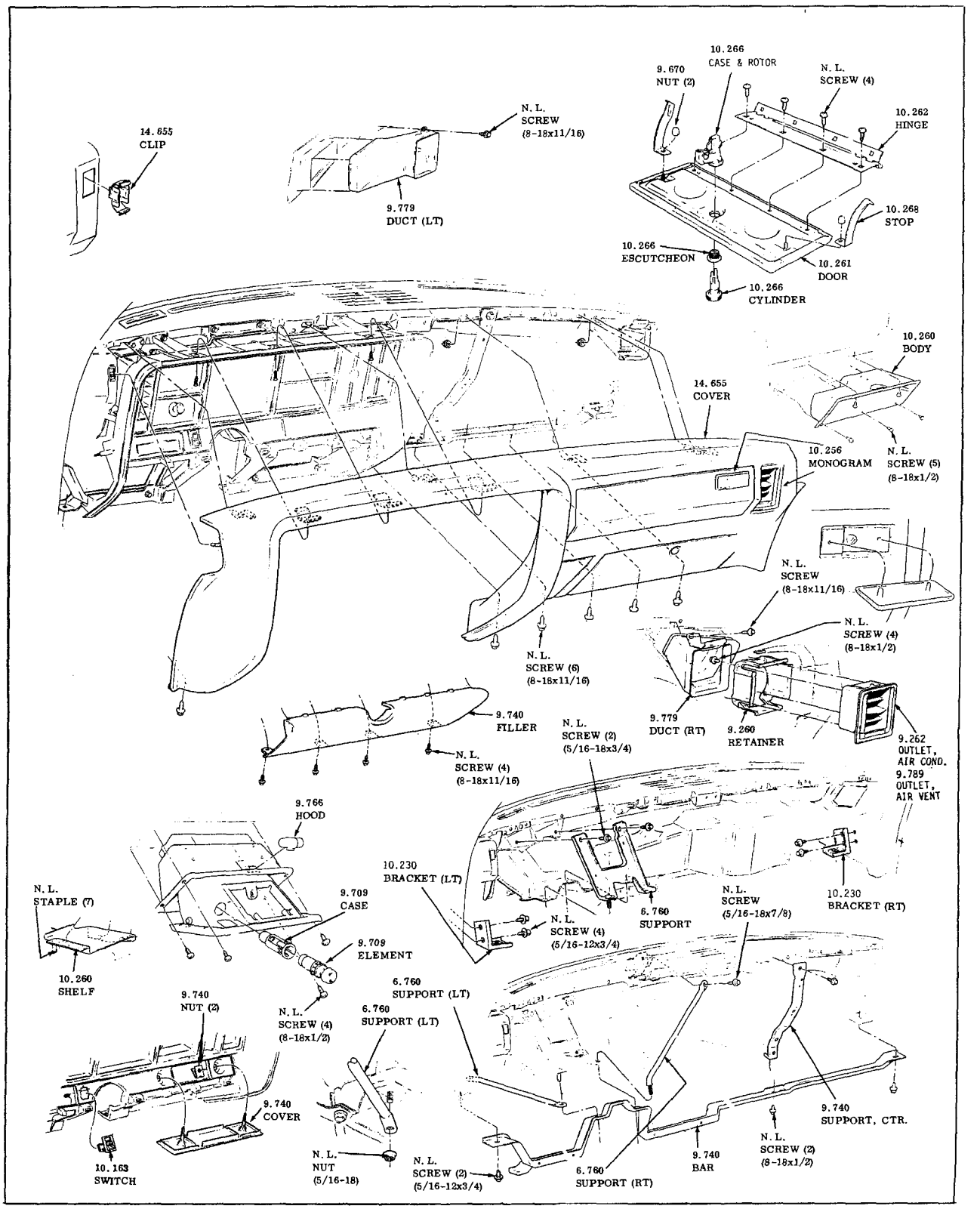

INSTRUMENT PANEL

1969-1970-50-60-8000

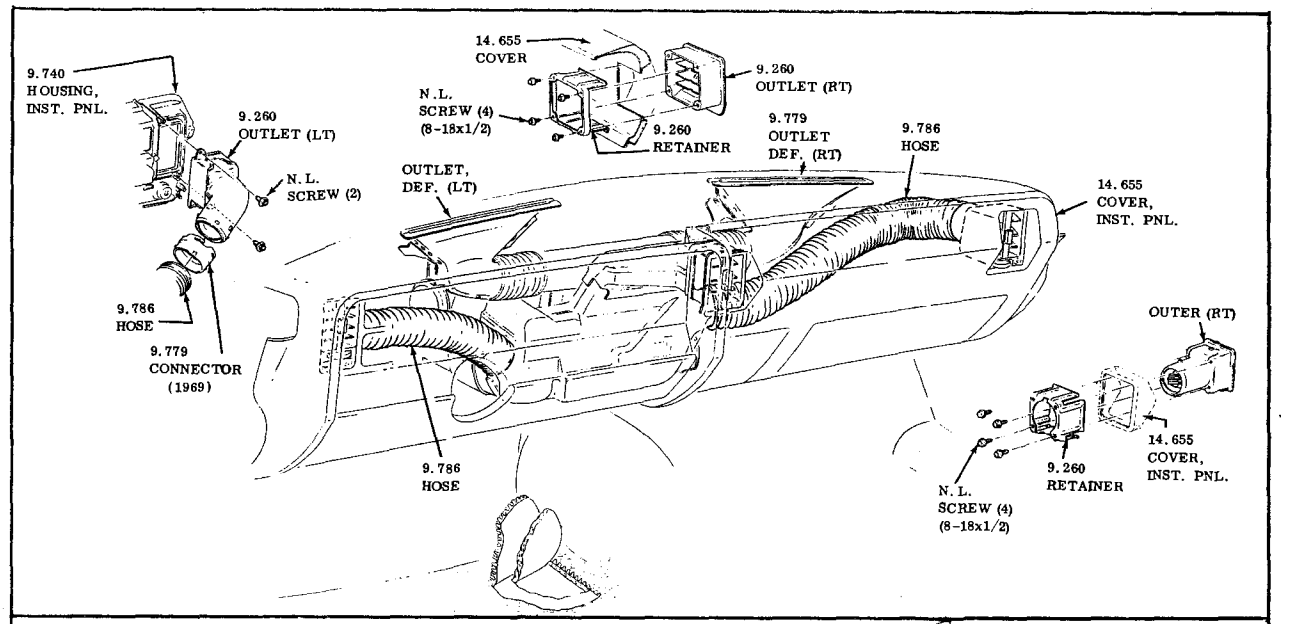

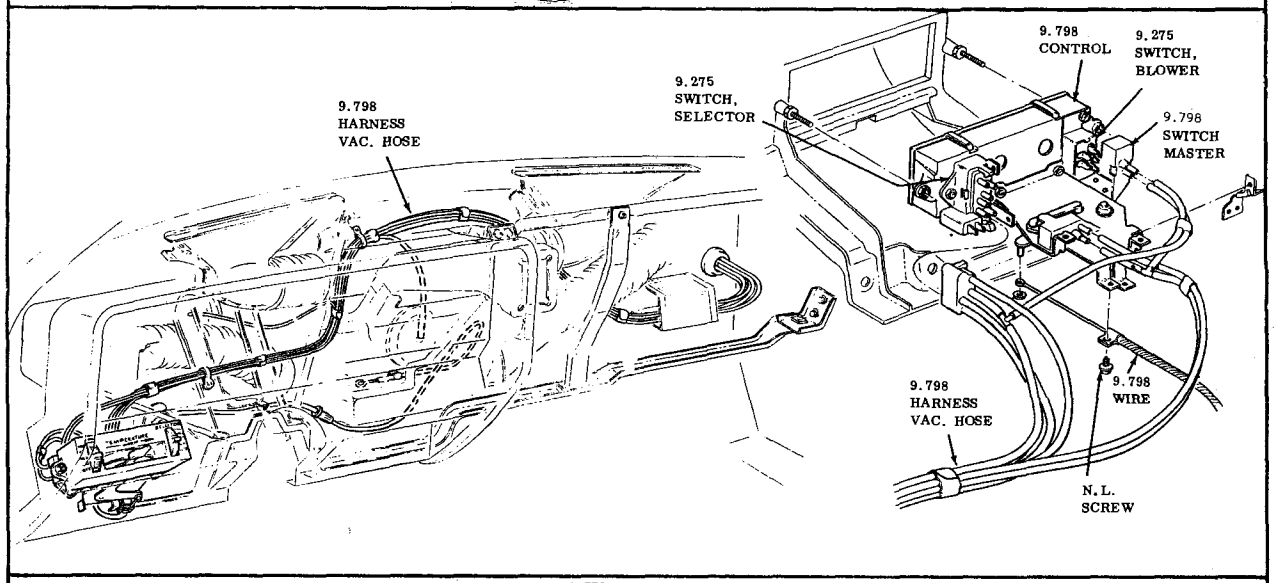

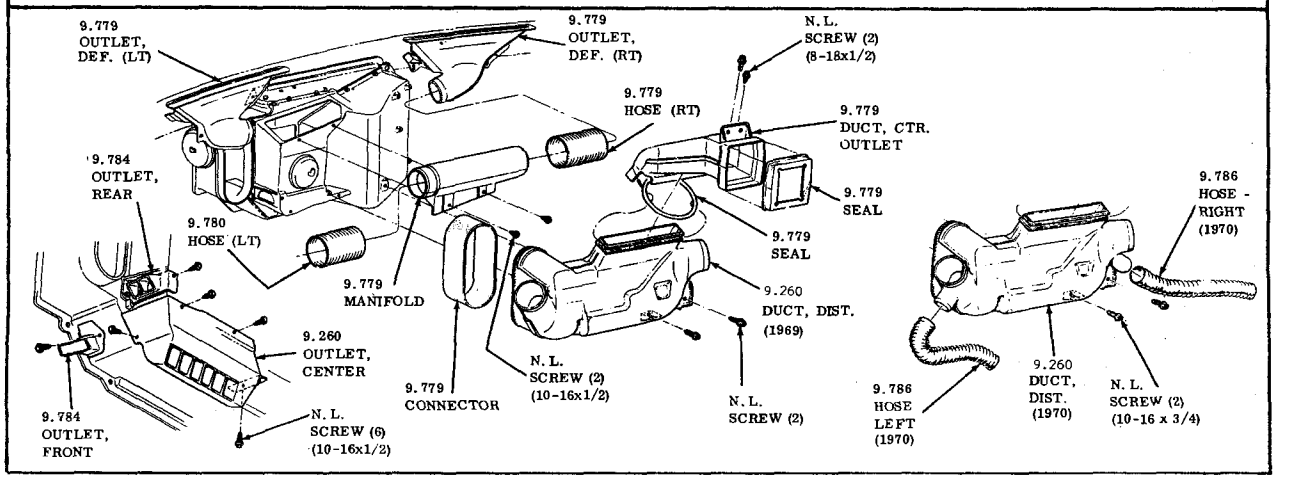

A/C INSTRUMENT PANEL UNITS
1969-1970 -50-60-8000

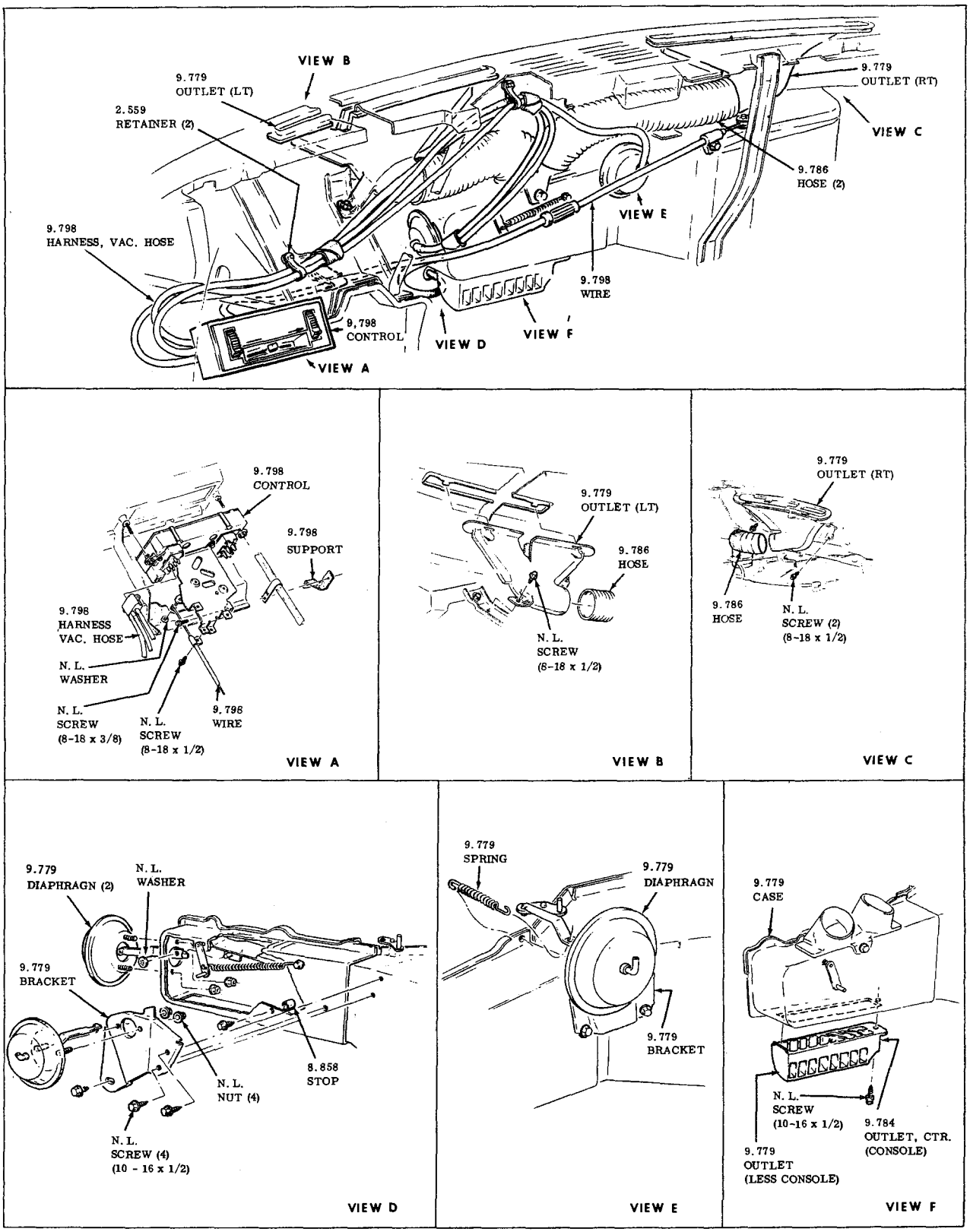

HEATER & DEFROSTER
CONTROLS & HARNESS
1969-1970 -50-60-8000

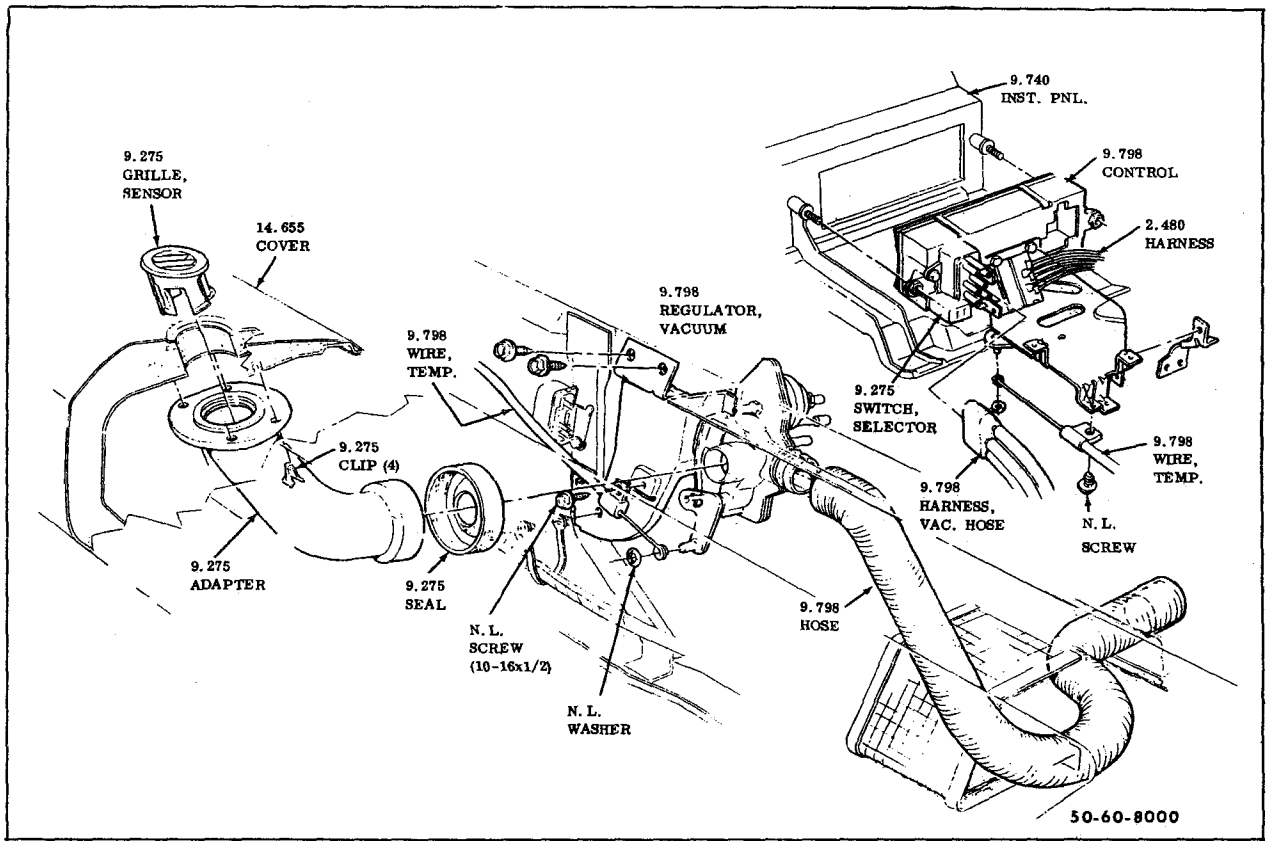

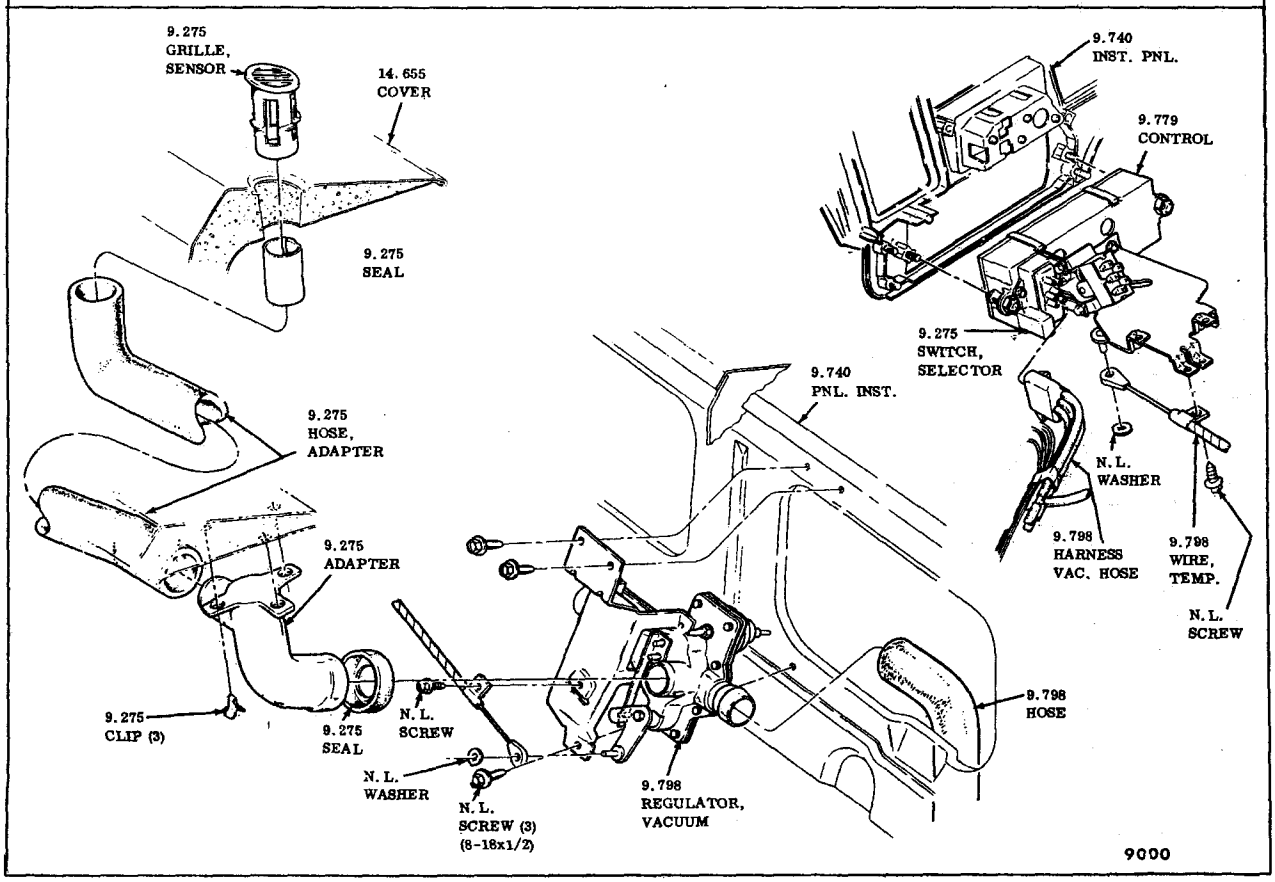

AUTOMATIC CLIMATE CONTROL
REGULATOR, THERMOSTATIC VACUUM
1969-1970-50-60-80-9000

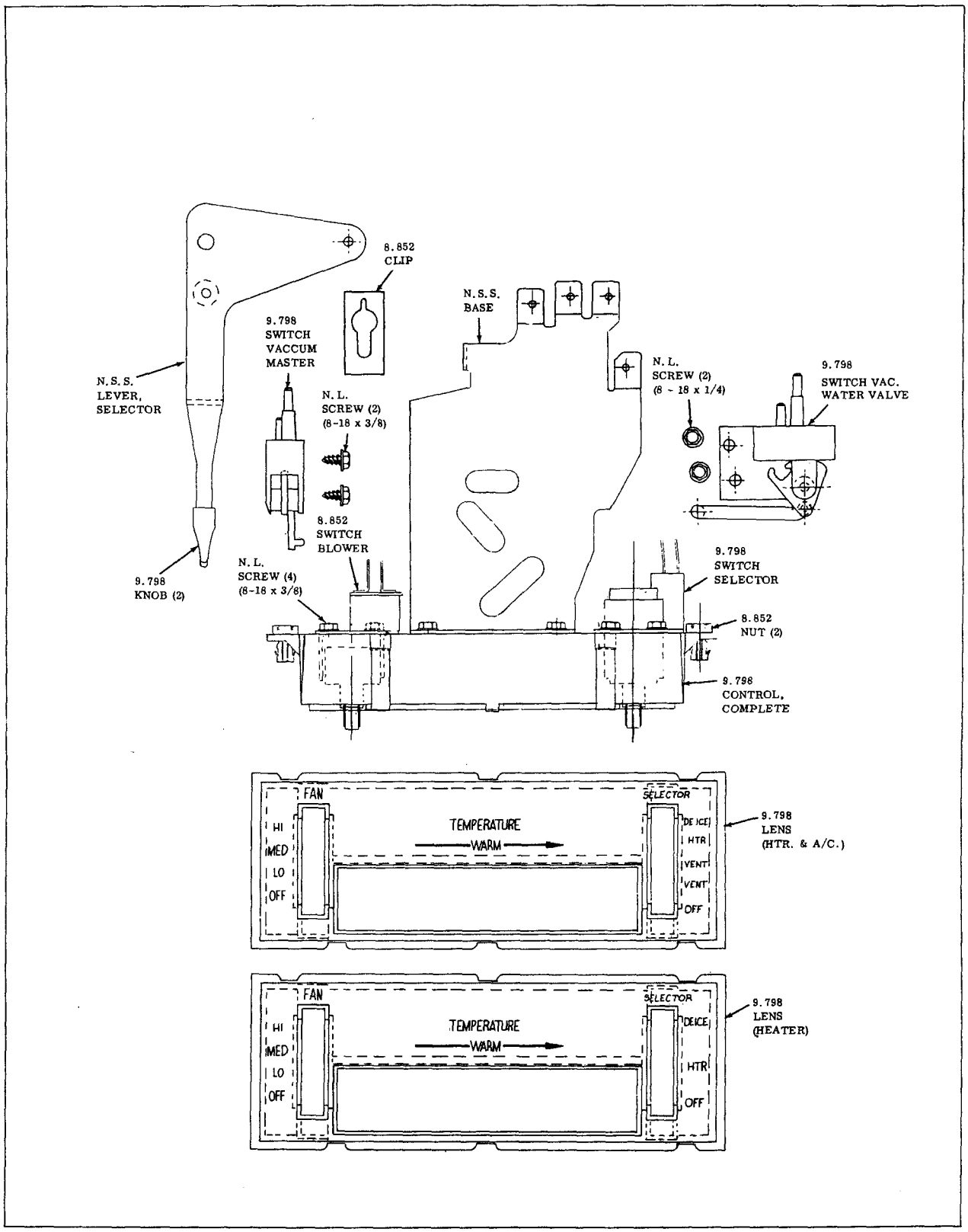

HEATER & DEFROSTER CONTROL (MANUAL)
1969-1970 -50-60-80-9000

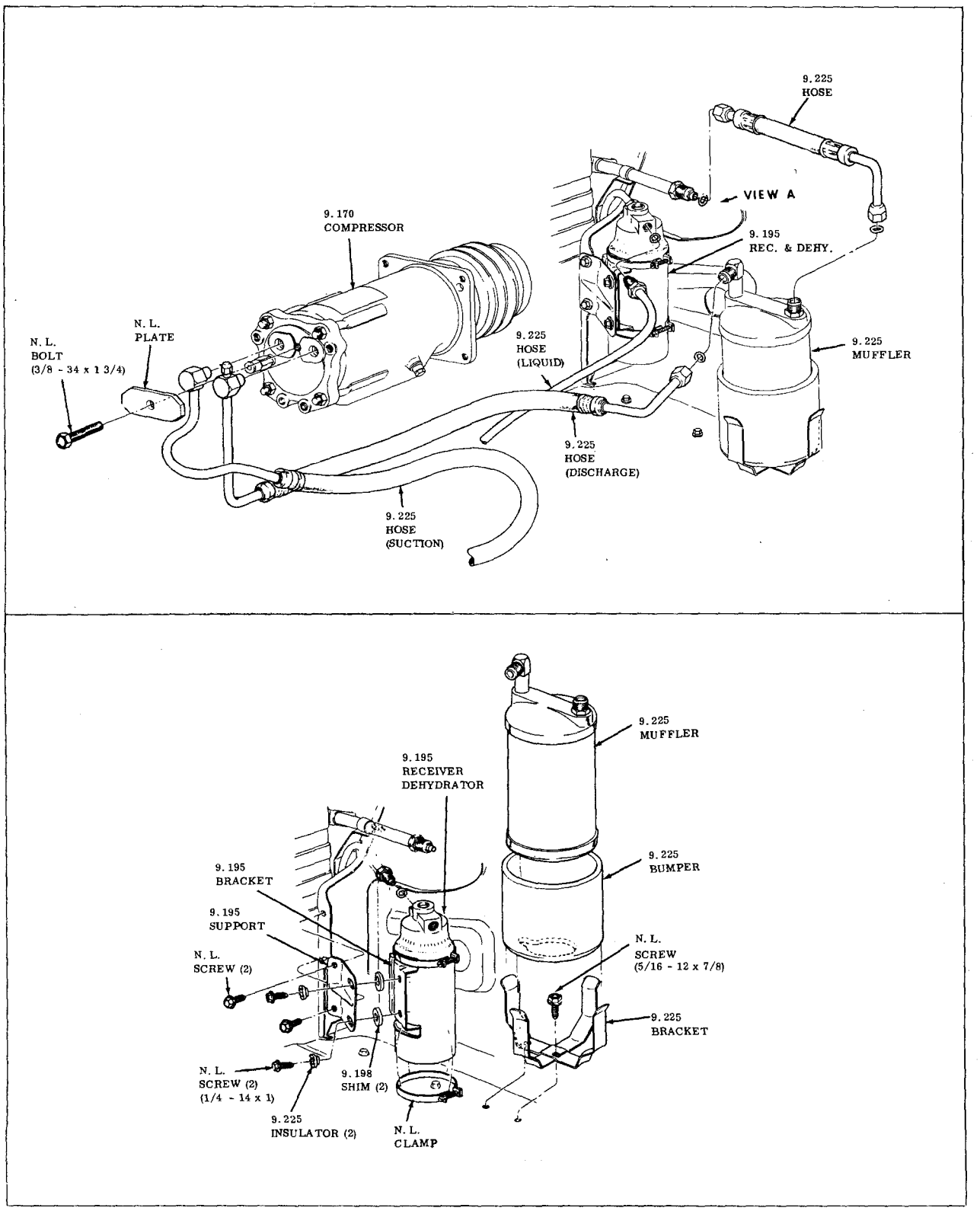

A/C COMPRESSOR, MUFFLER, AND REC. DEHYDRATOR
1969-9000

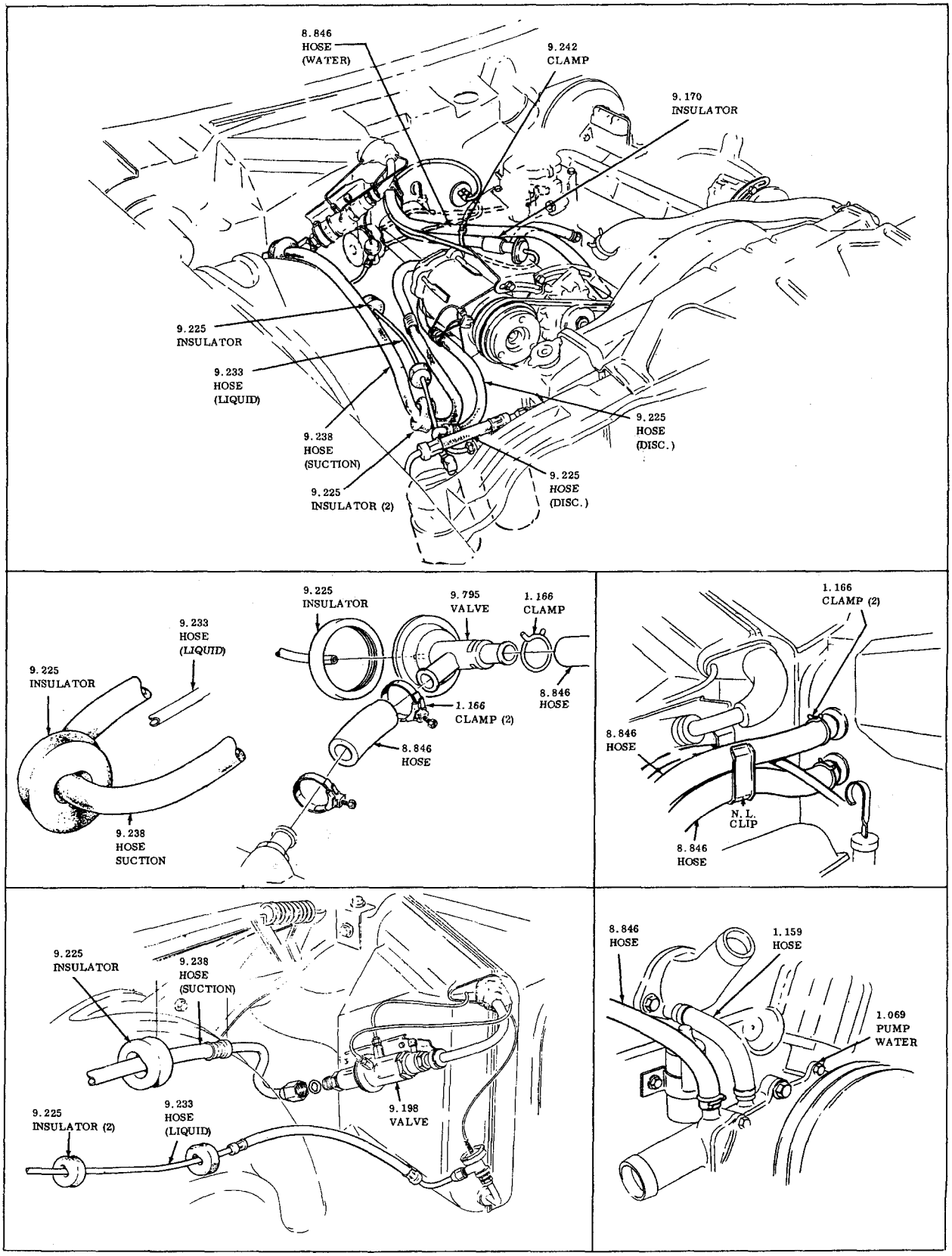

A/C HOSE, WATER, & SUCTION
1969-9000

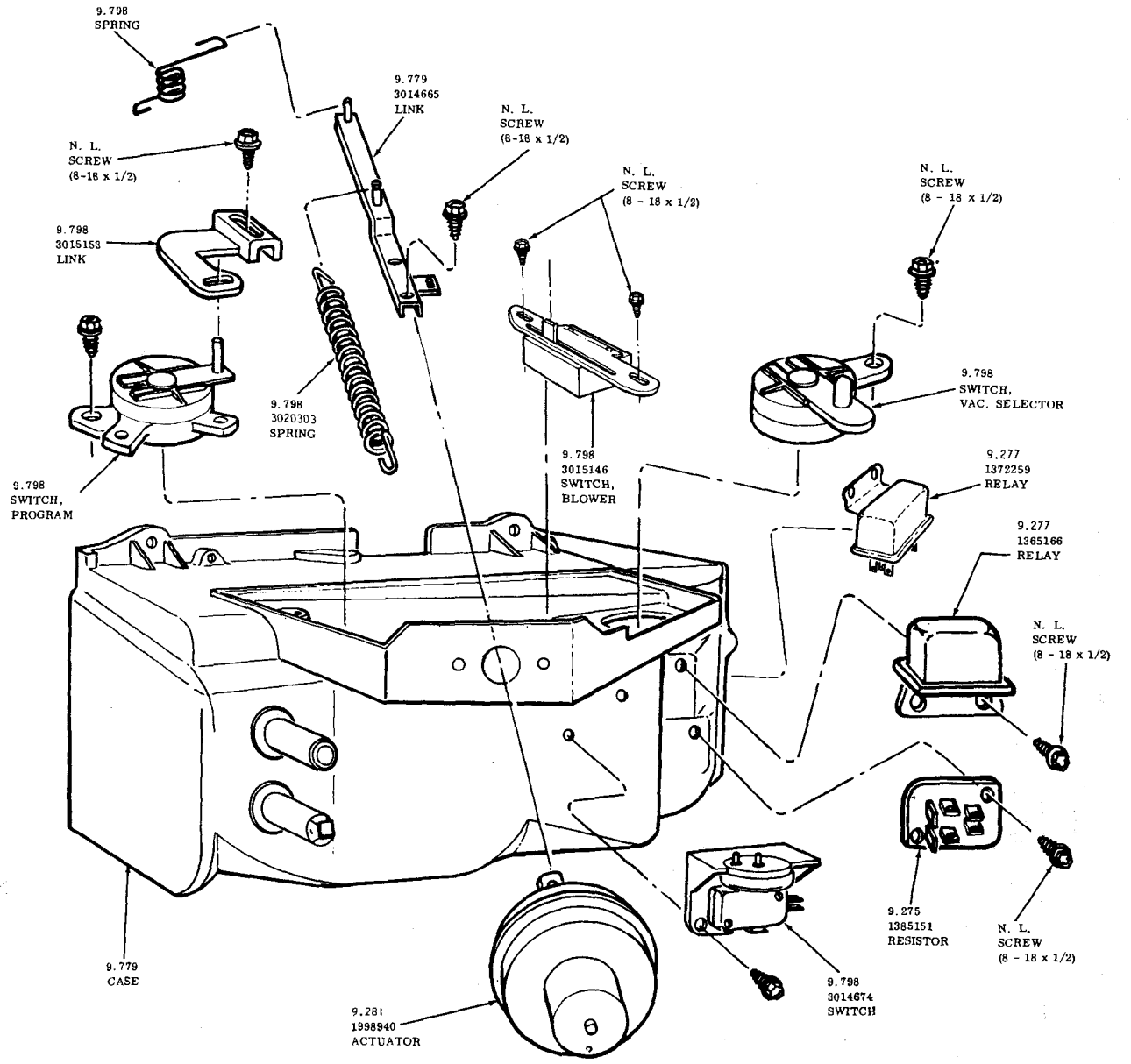

AUTOMATIC CLIMATIC CONTROL
1969-1970 RIVIERA

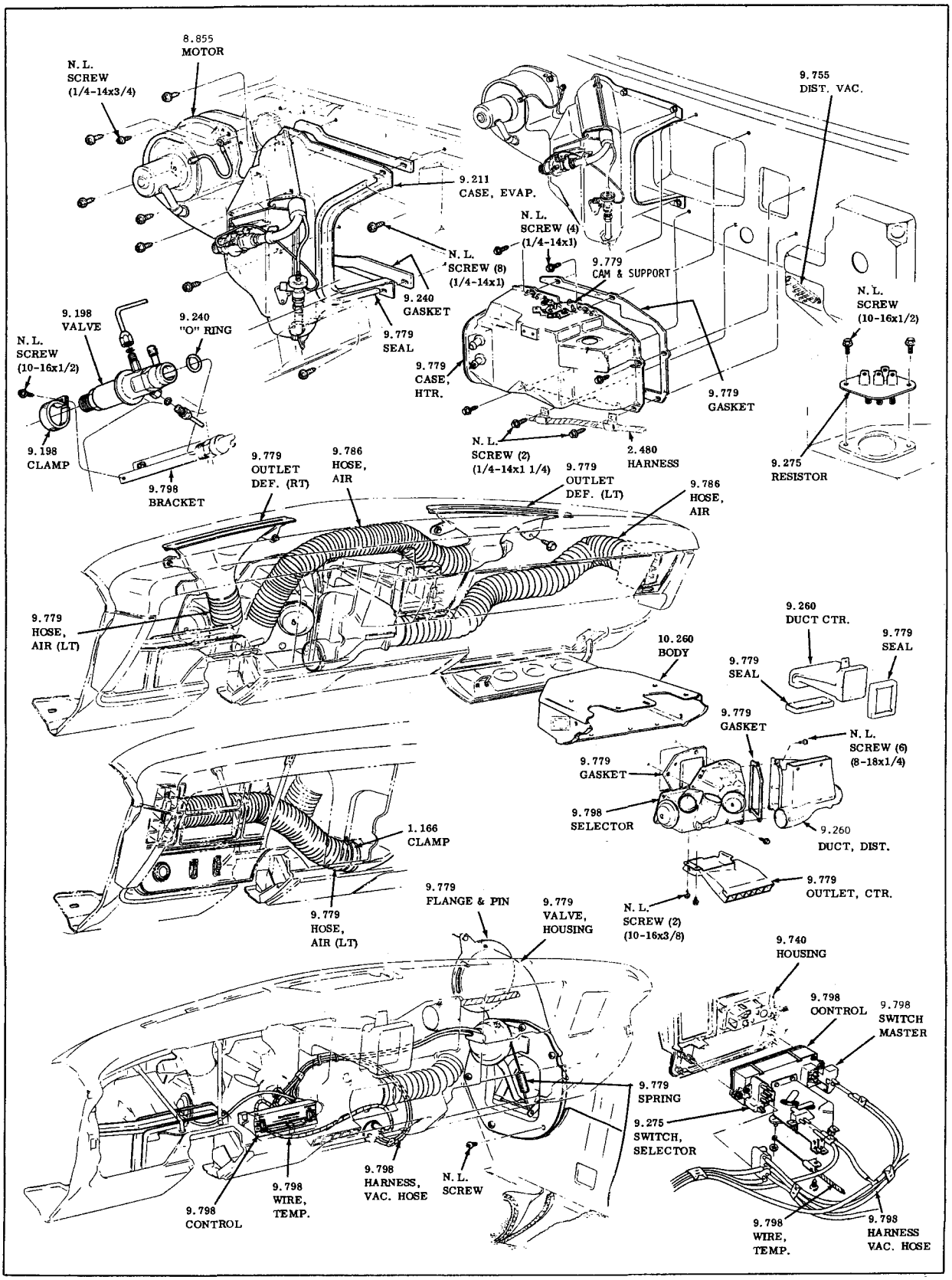

AIR CONDITIONING INSTALLATION
1969-9000

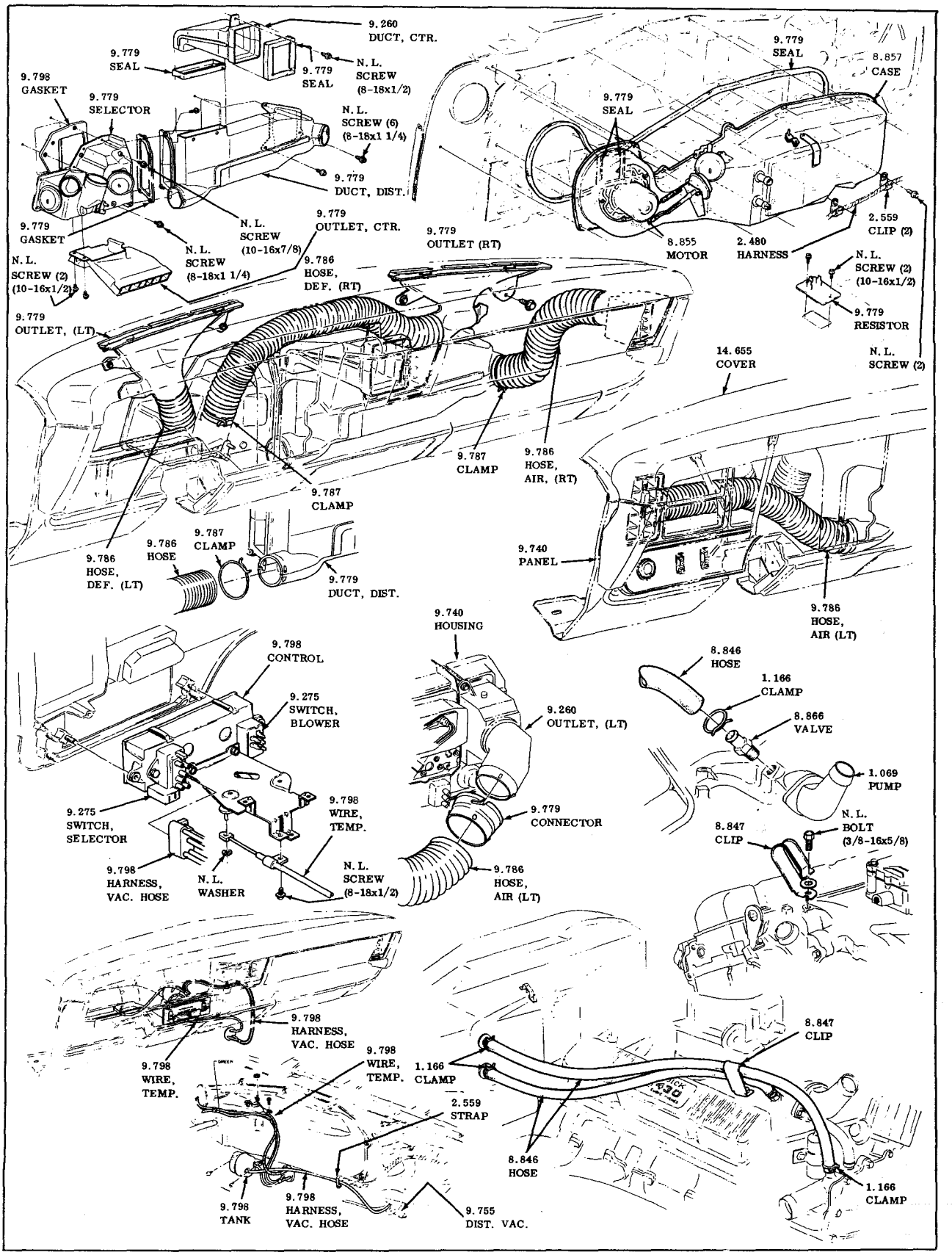

HEATER A DEFROSTER
1969-1970 RIVIERA

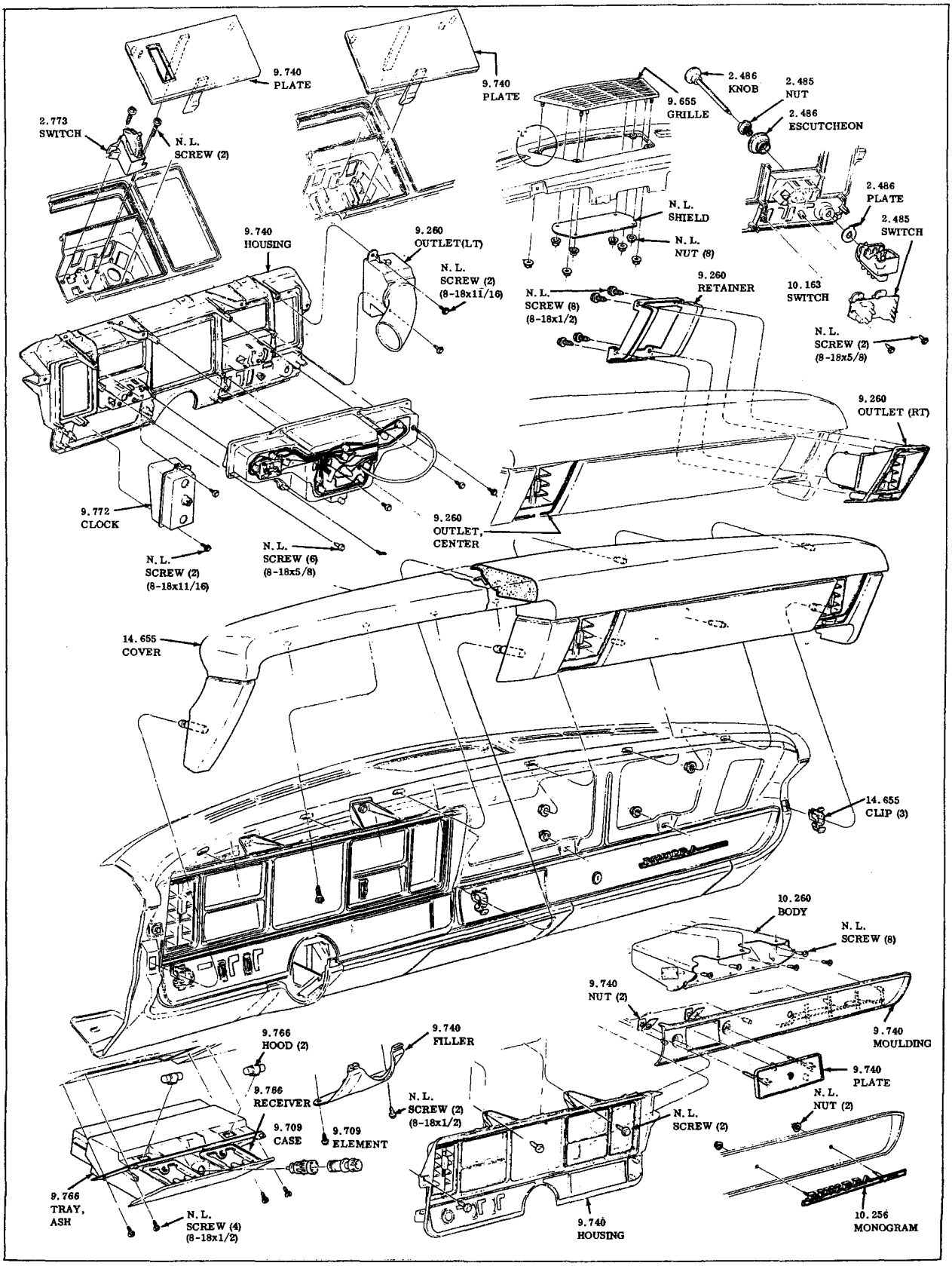

INSTRUMENT PANEL
1969-1970 -9000

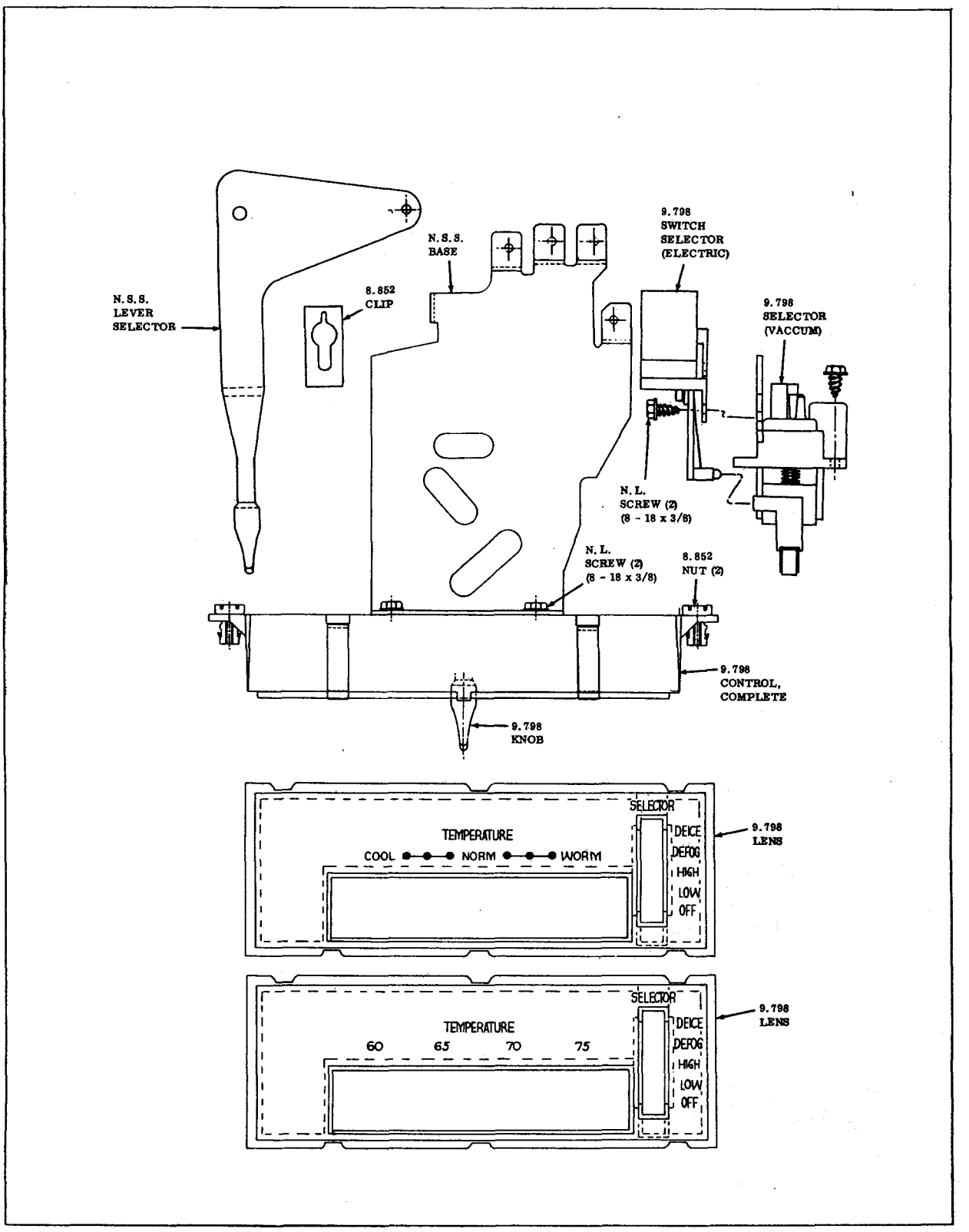

HEATER & DEFROSTER (AUTO, CLIMATIC CONTROL)
1969-ALL

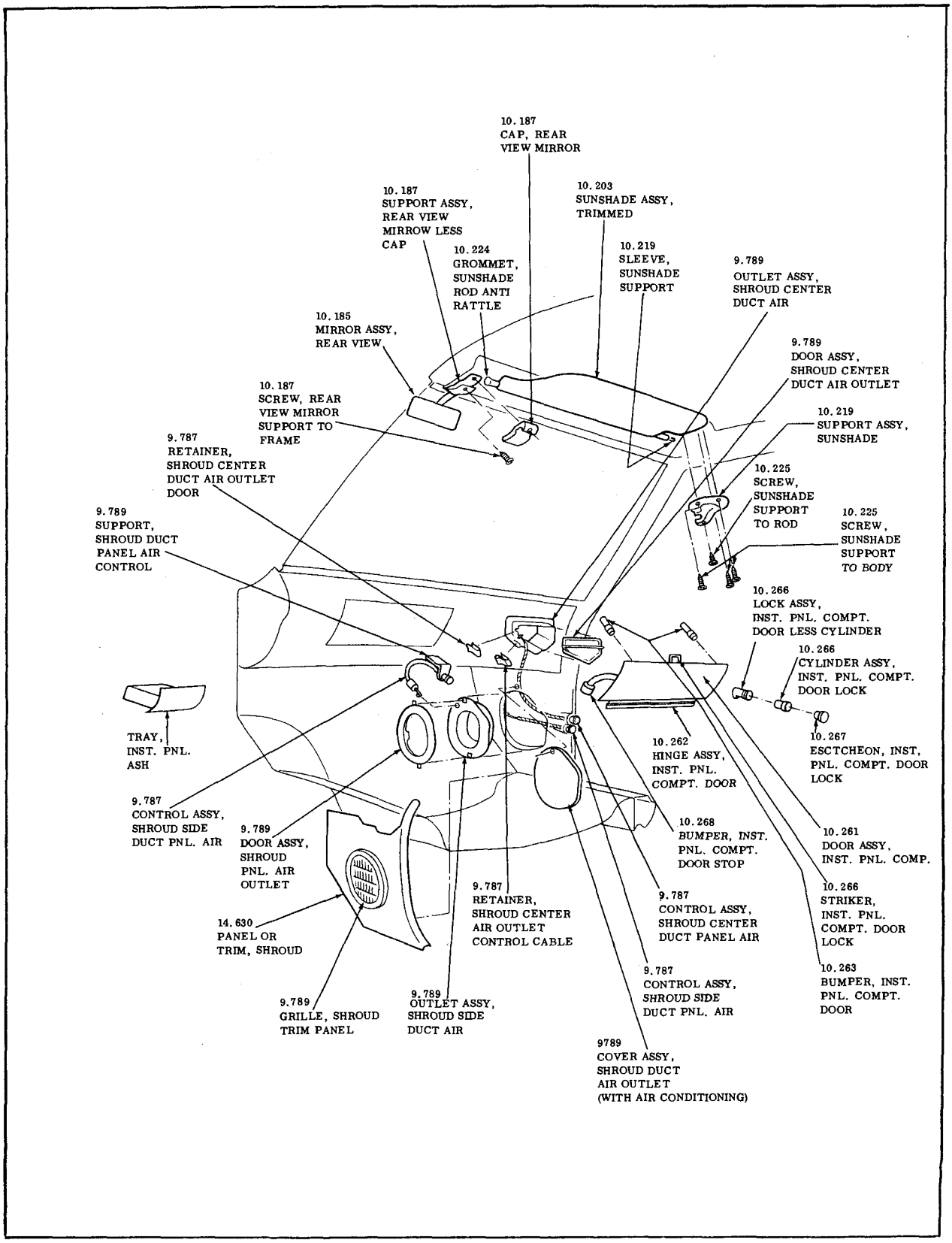

1969-1971 BODY FRONT END HARDWARE (TYPICAL)

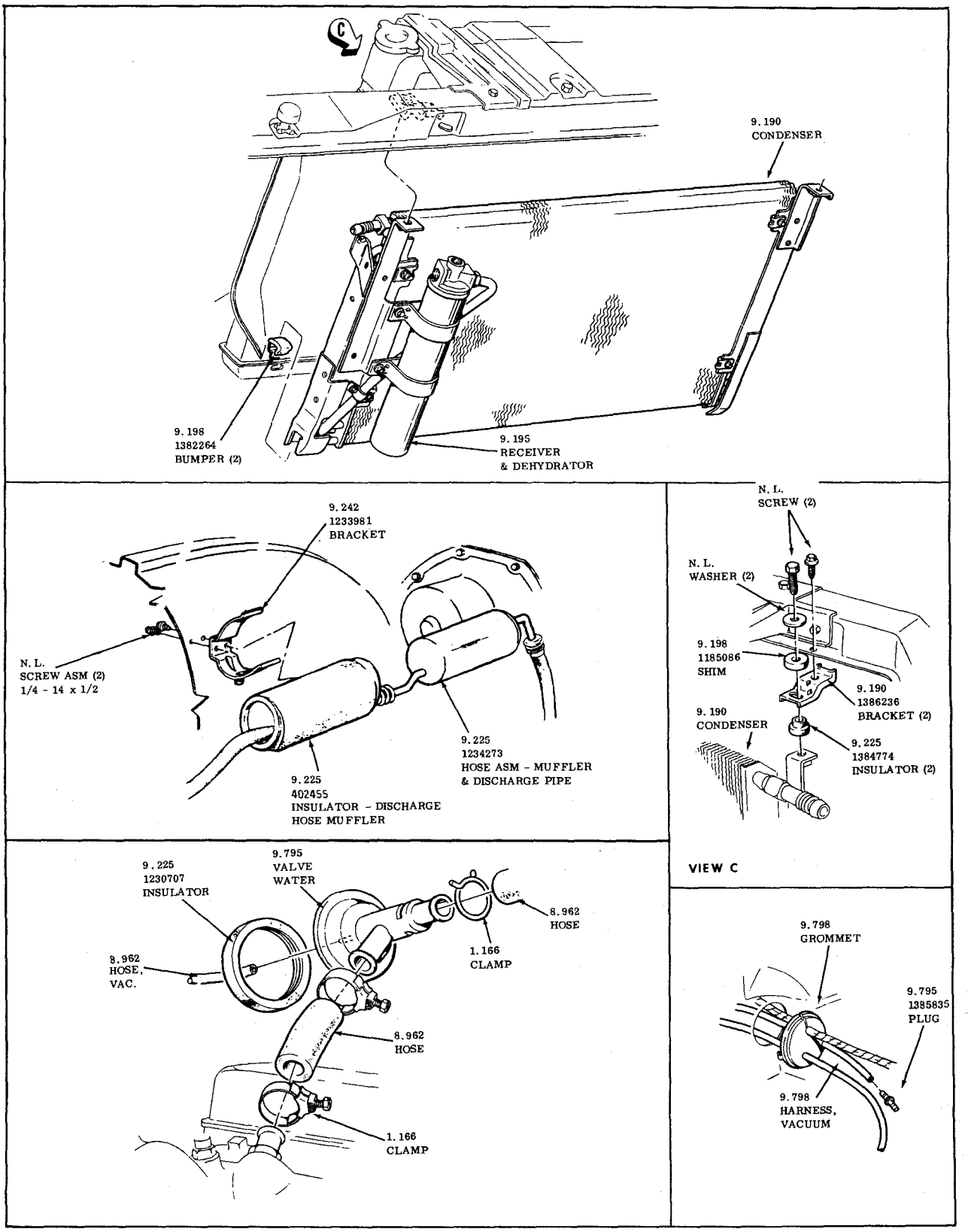

A/C RECEIVER DEHYDRATOR, MUFFLER, A WATER VALVE
1970-30-4000

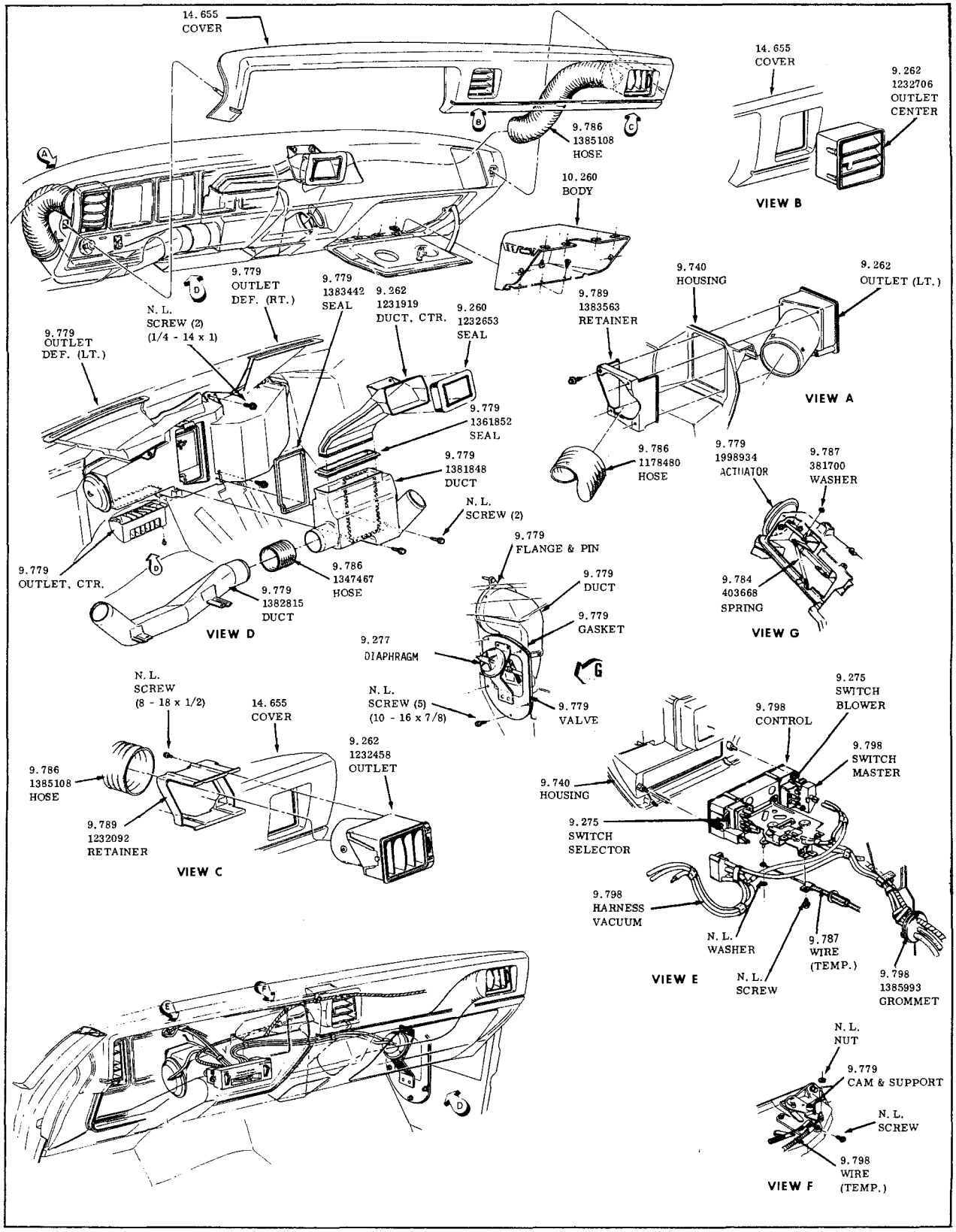

A/C INSTRUMENT PANEL UNITS
1970-30-4000

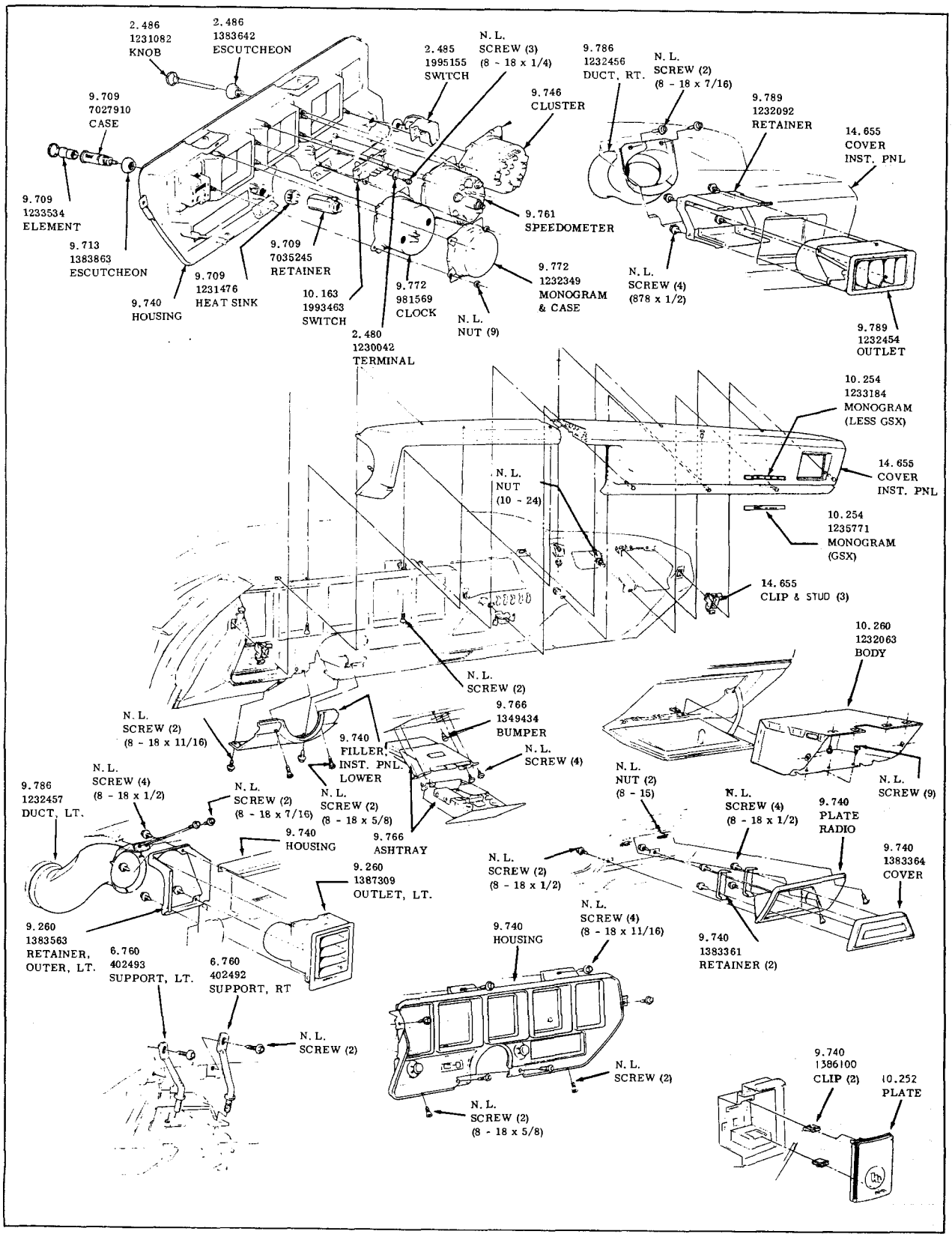

INSTRUMENT PANEL

1970-1972 30-4000

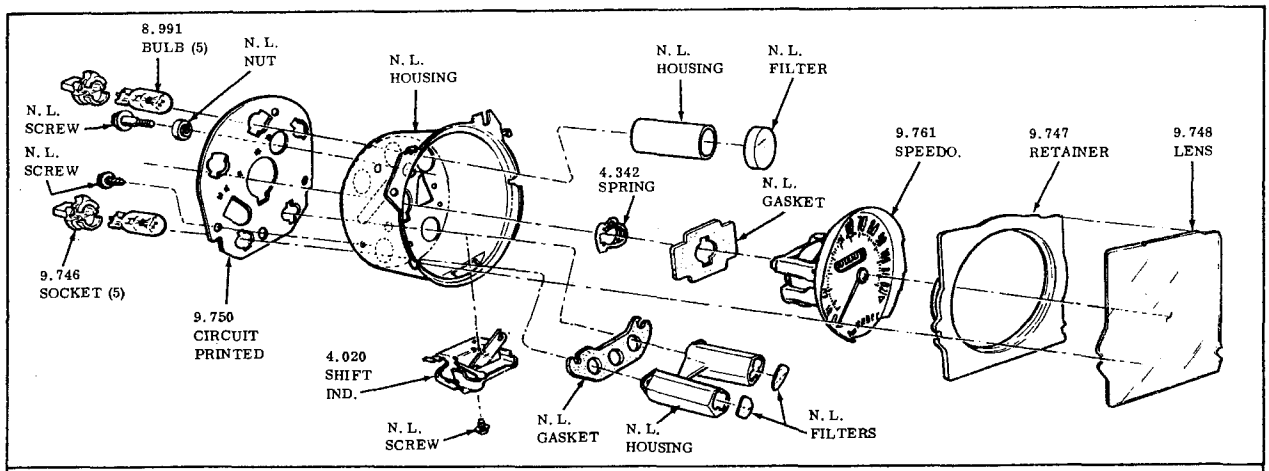

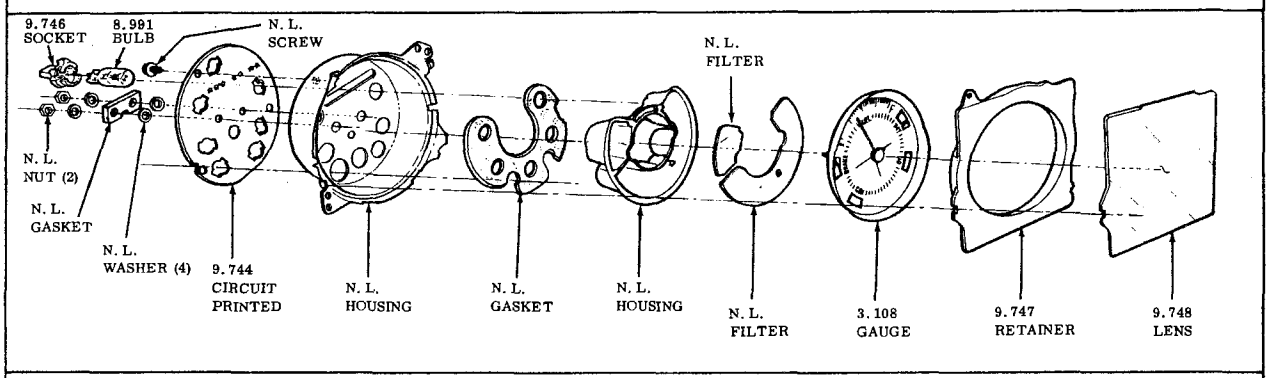

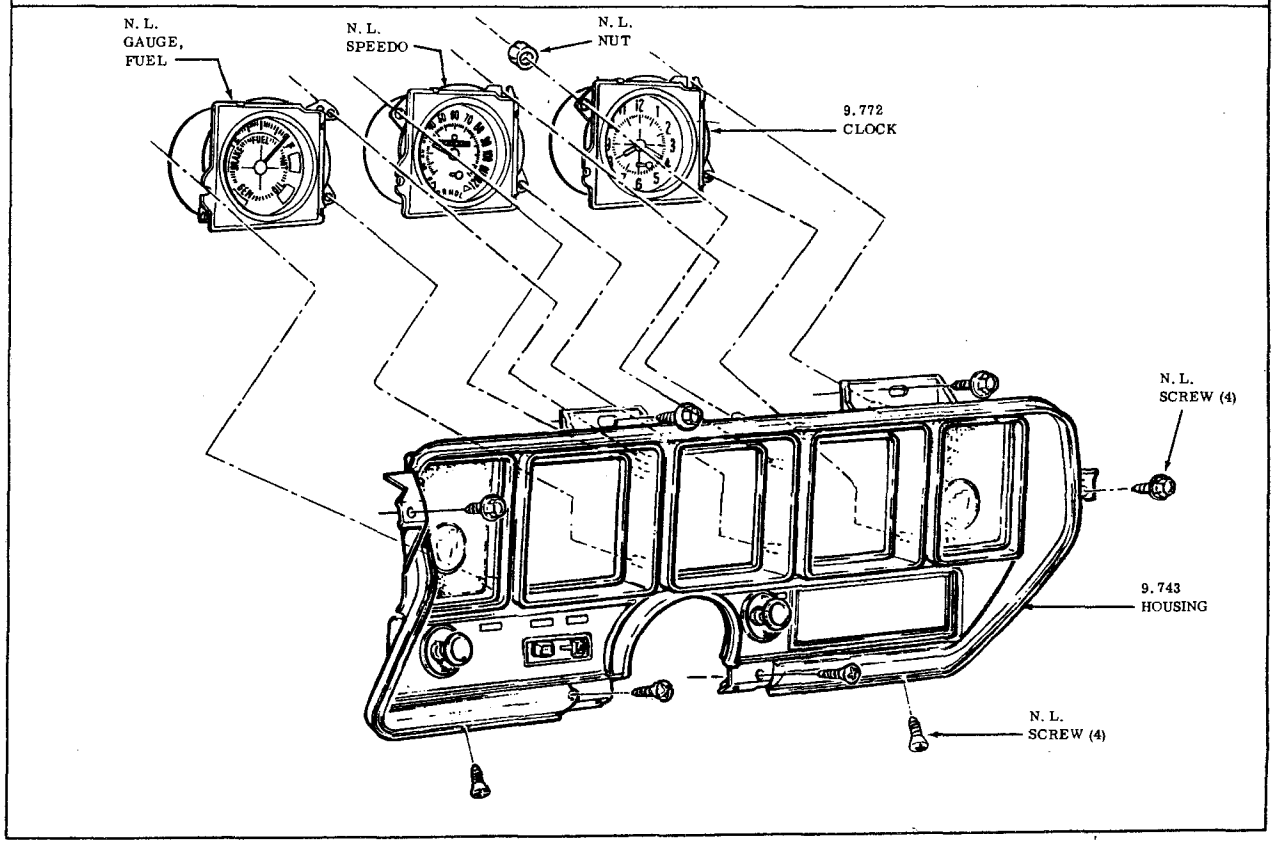

INSTRUMENT CLUSTER
1970-1972 30-4000

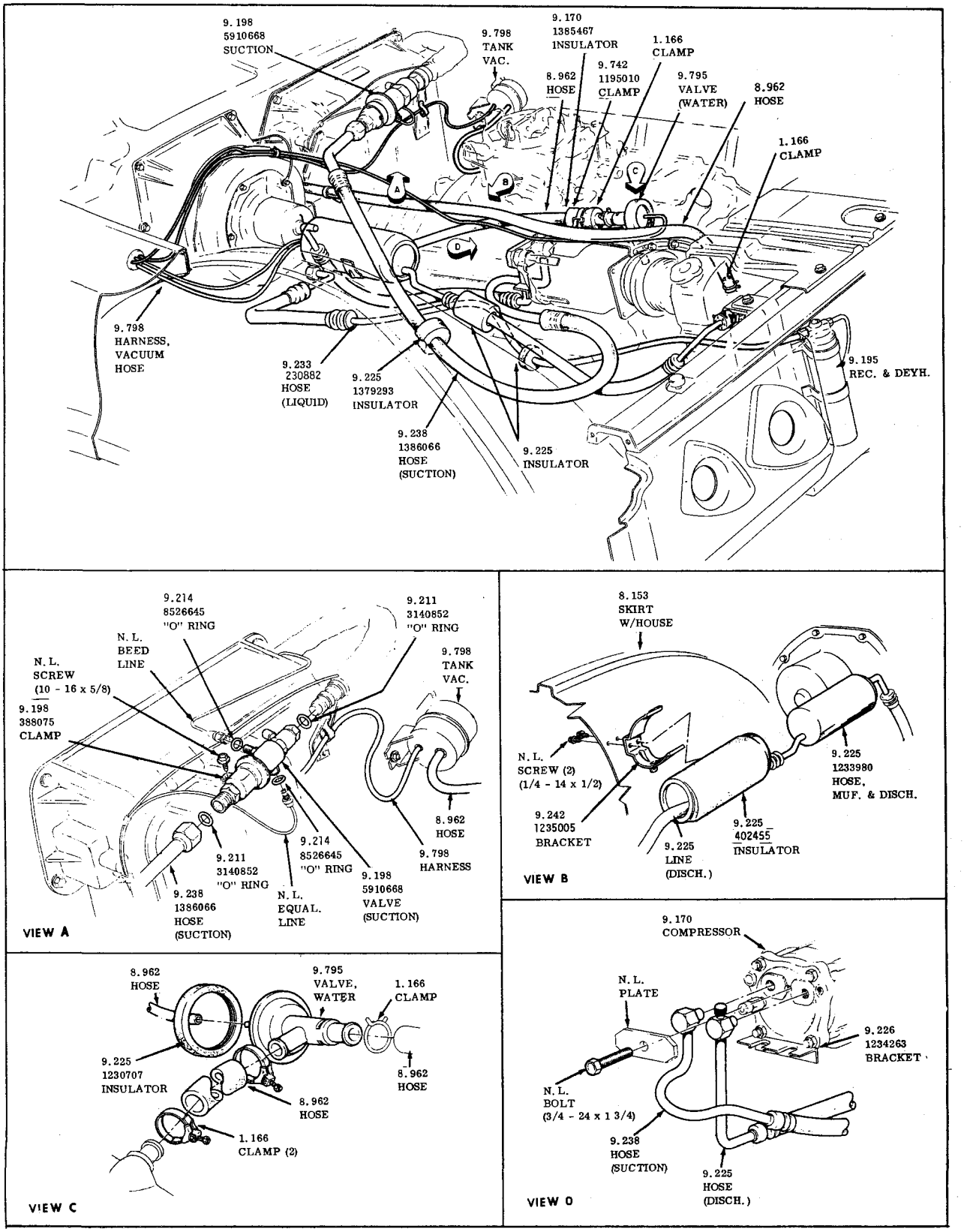

AIR CONDITIONING ENGINE UNIT

1970-50-60-8000

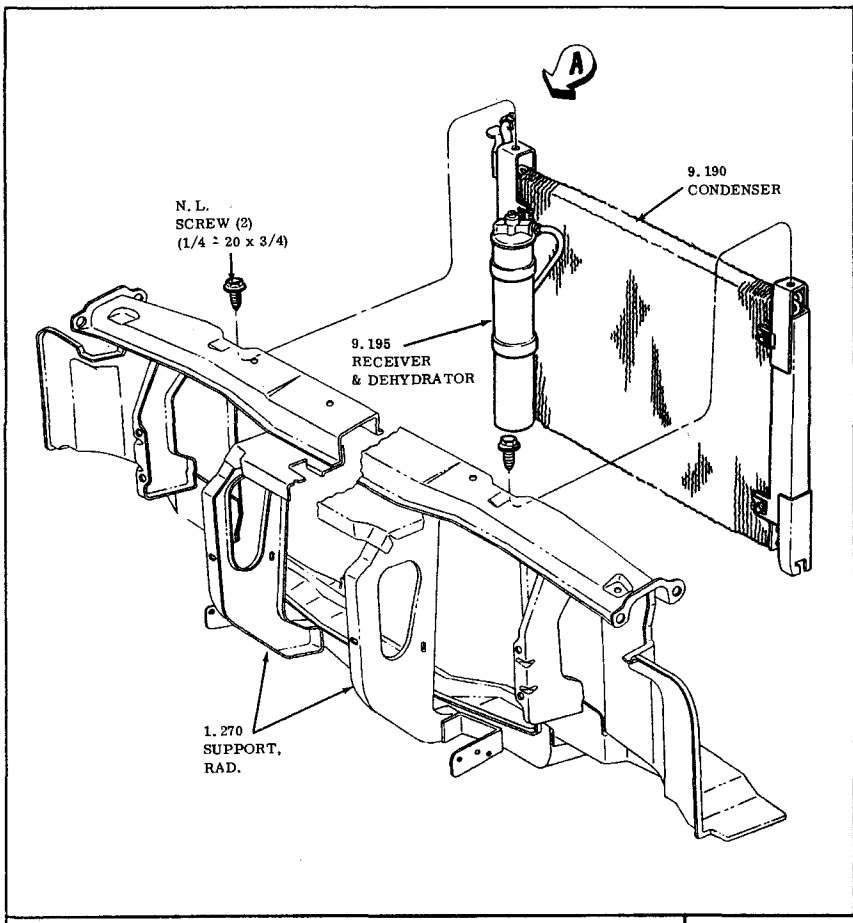

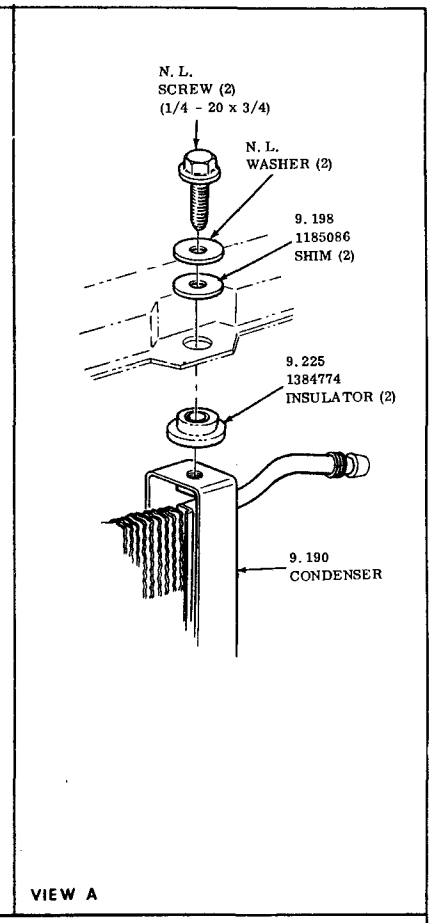

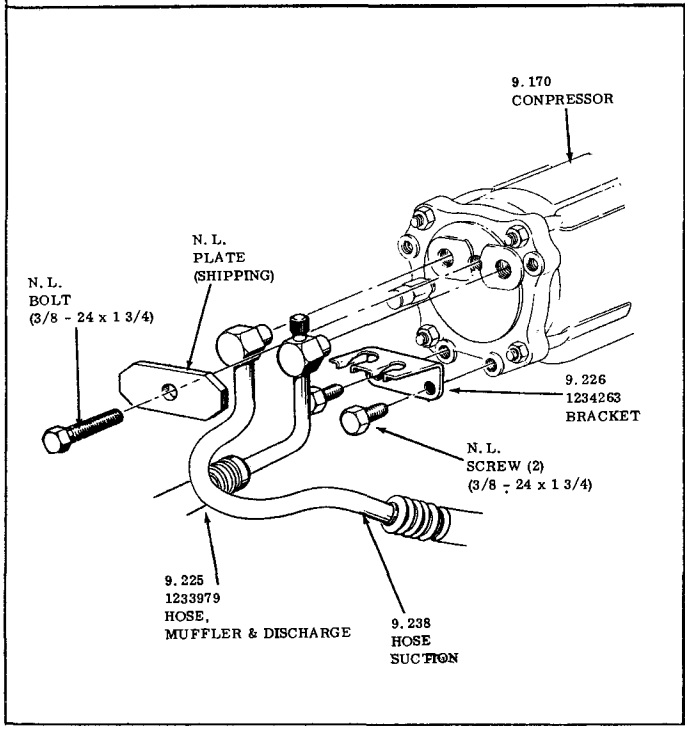

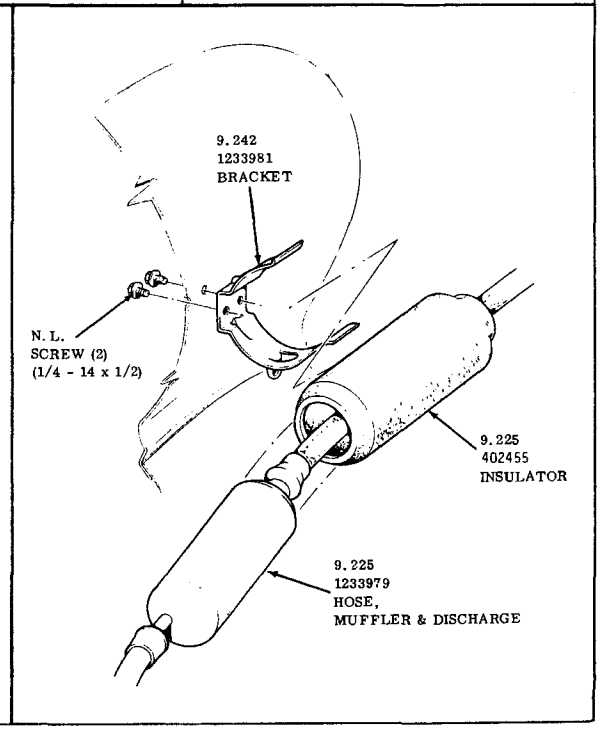

A/C COMPRESSOR, MUFFLER, & REC. DEHYDRATOR
1970-9000

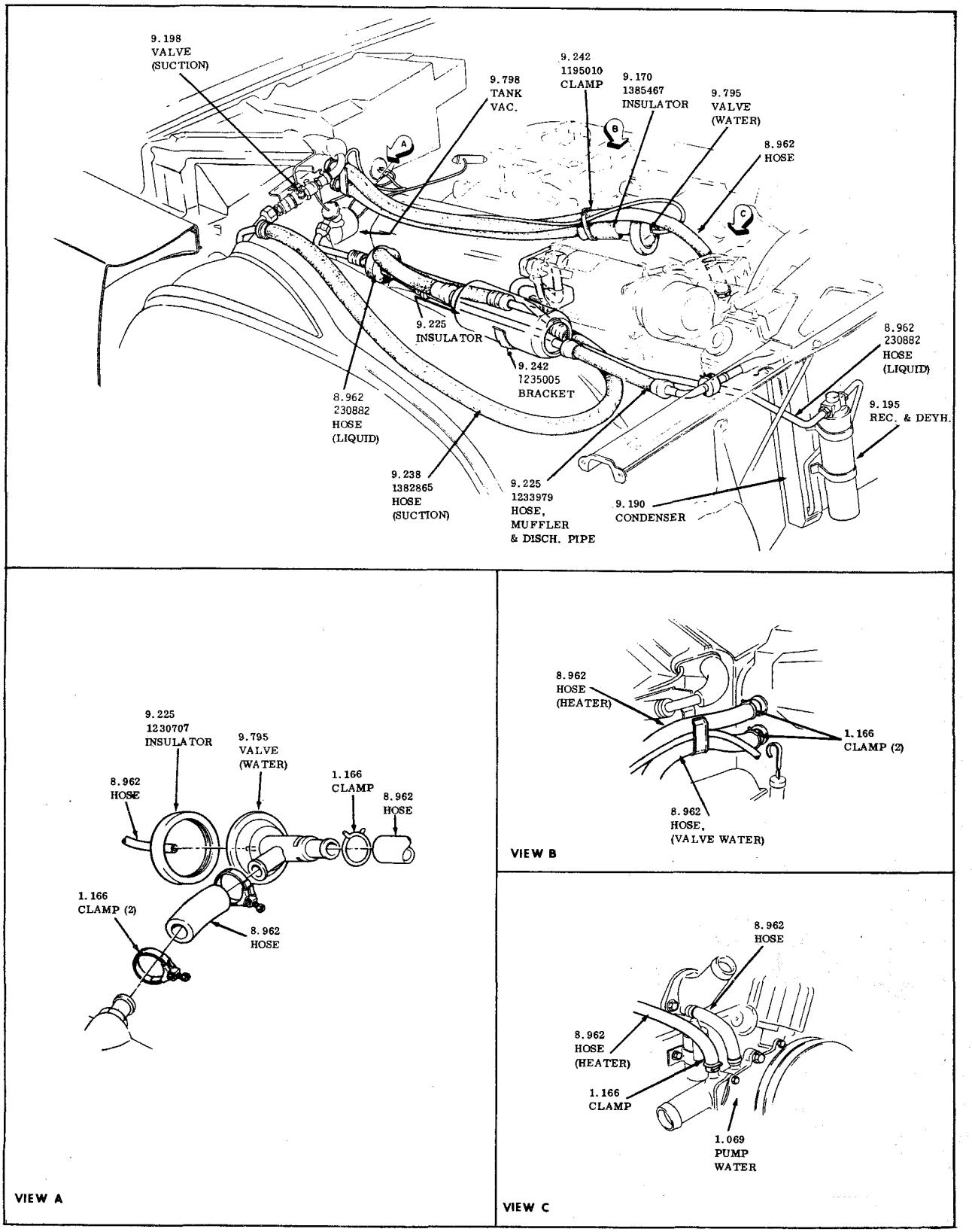

A/C HOSE, WATER, A SUCTION
1970-9000

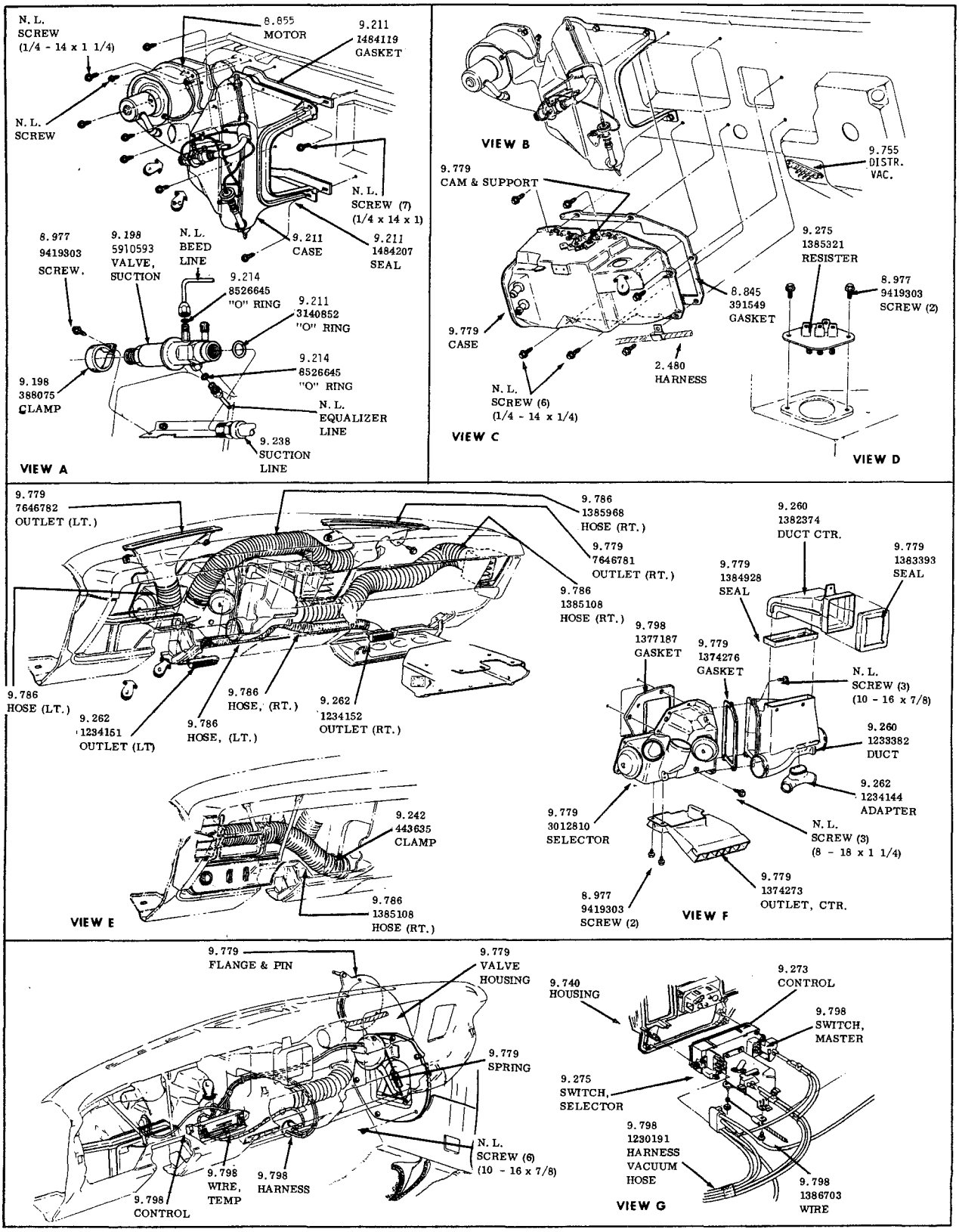

AIR CONDITIONING INSTALLATION
1970-9000

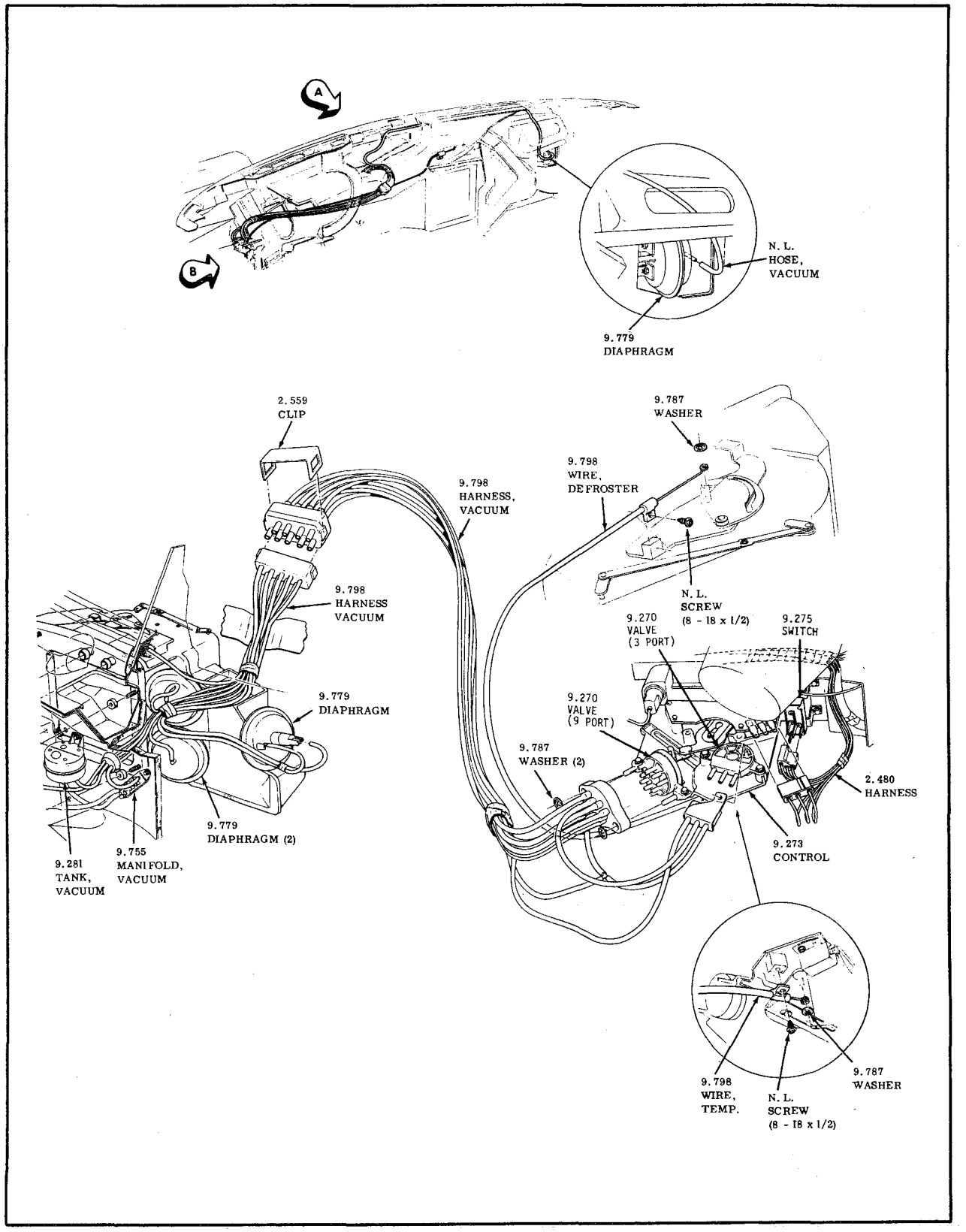

AIR CONDITIONING INSTRUMENT PANEL
CONTROLS AND HARNESS
1970-50-60-80-9000

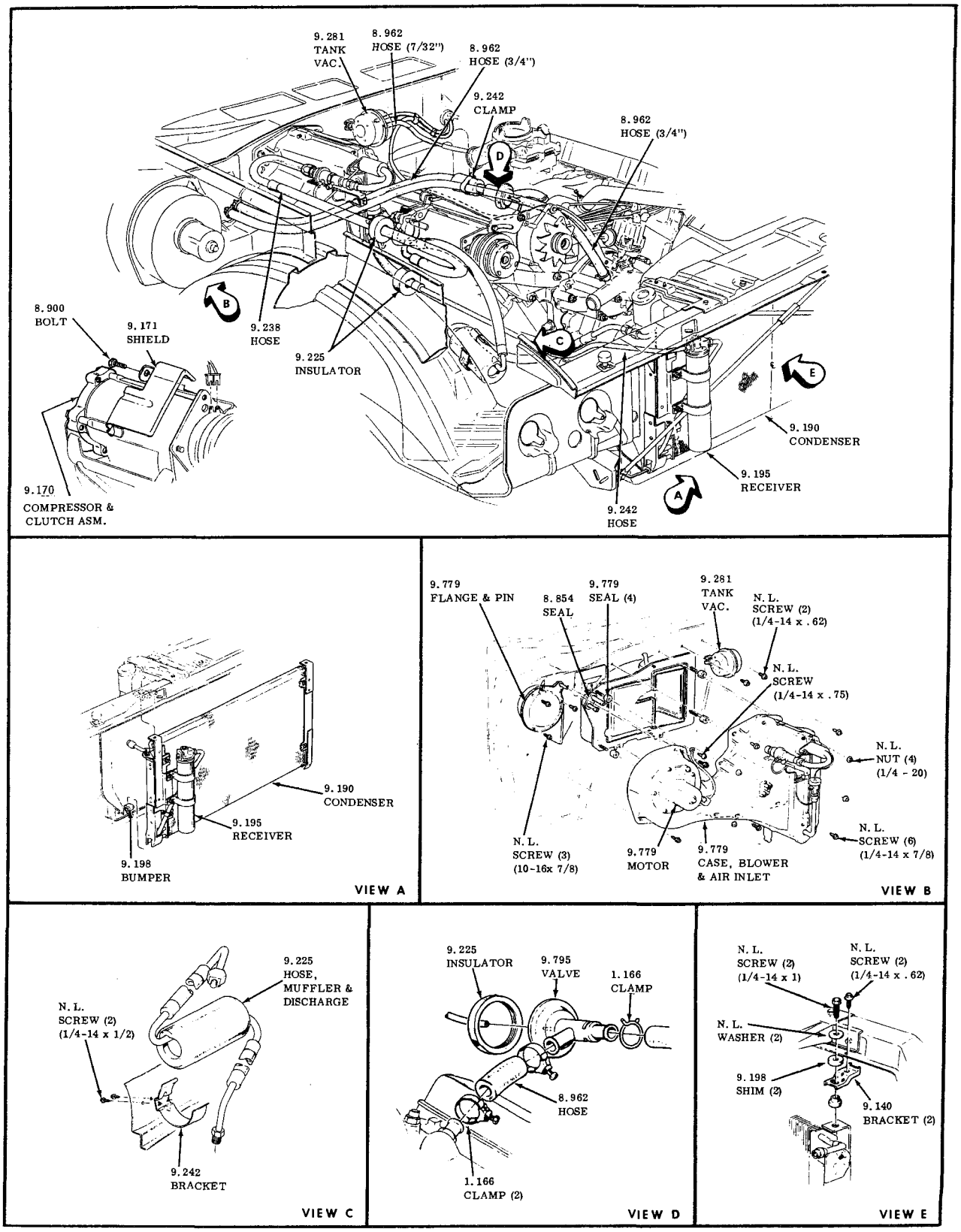

AIR CONDITIONING ENGINE UNIT

1971-1972 30-4000

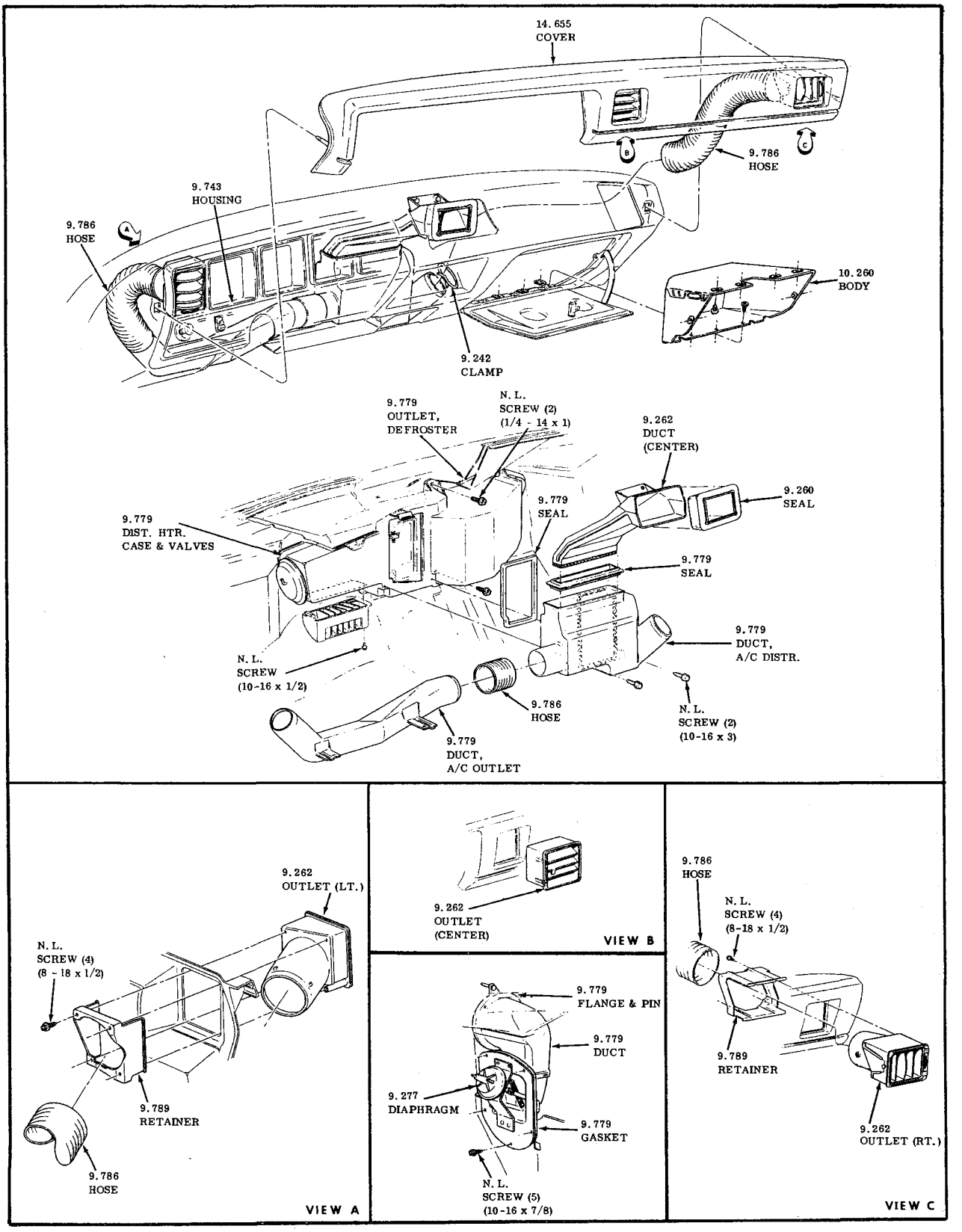

A/C AND HEATER INST. PANEL OUTLETS

1971 - 1972 30-4000

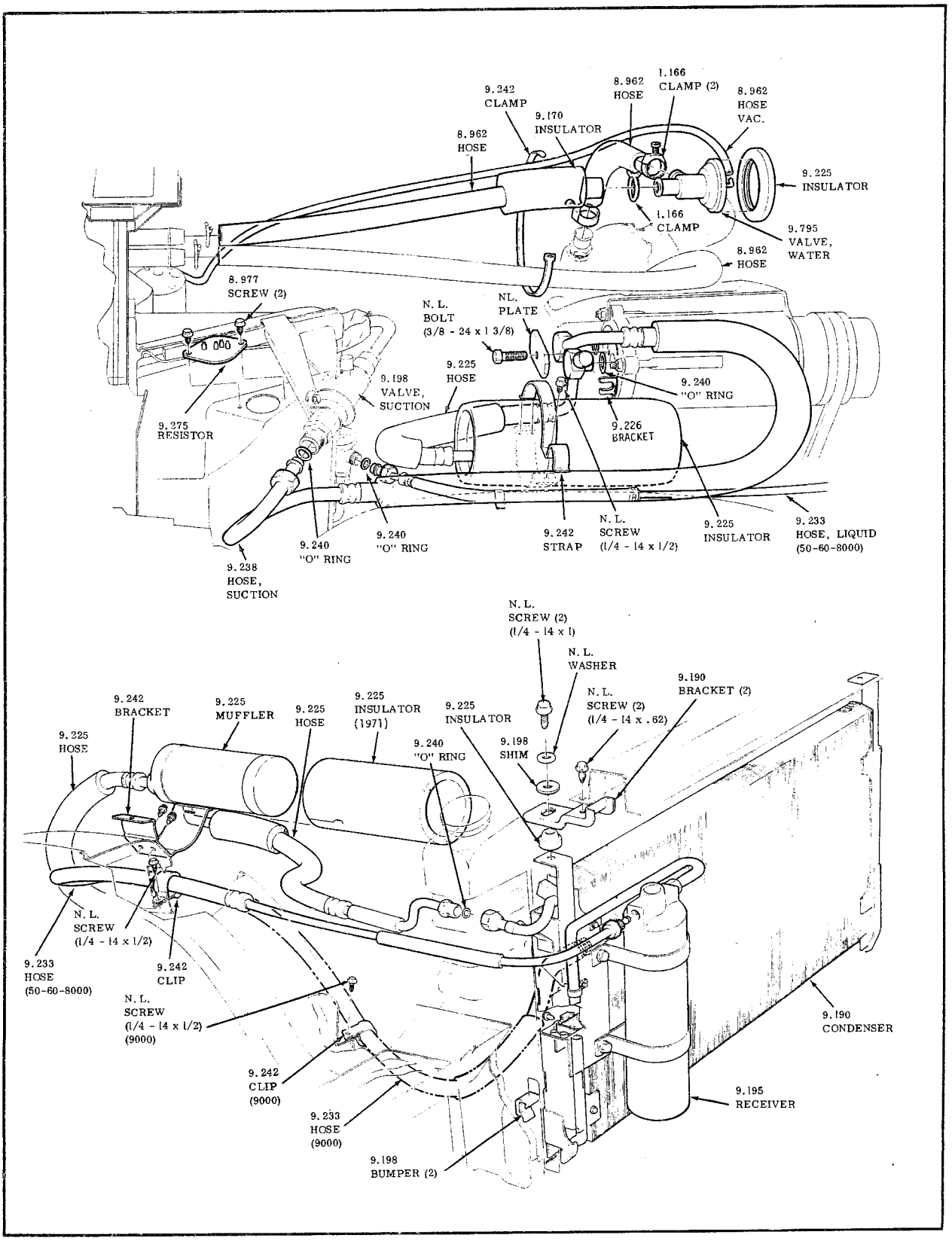

AIR CONDITIONING ENGINE UNIT

1971- 1972 50-60-80-9000

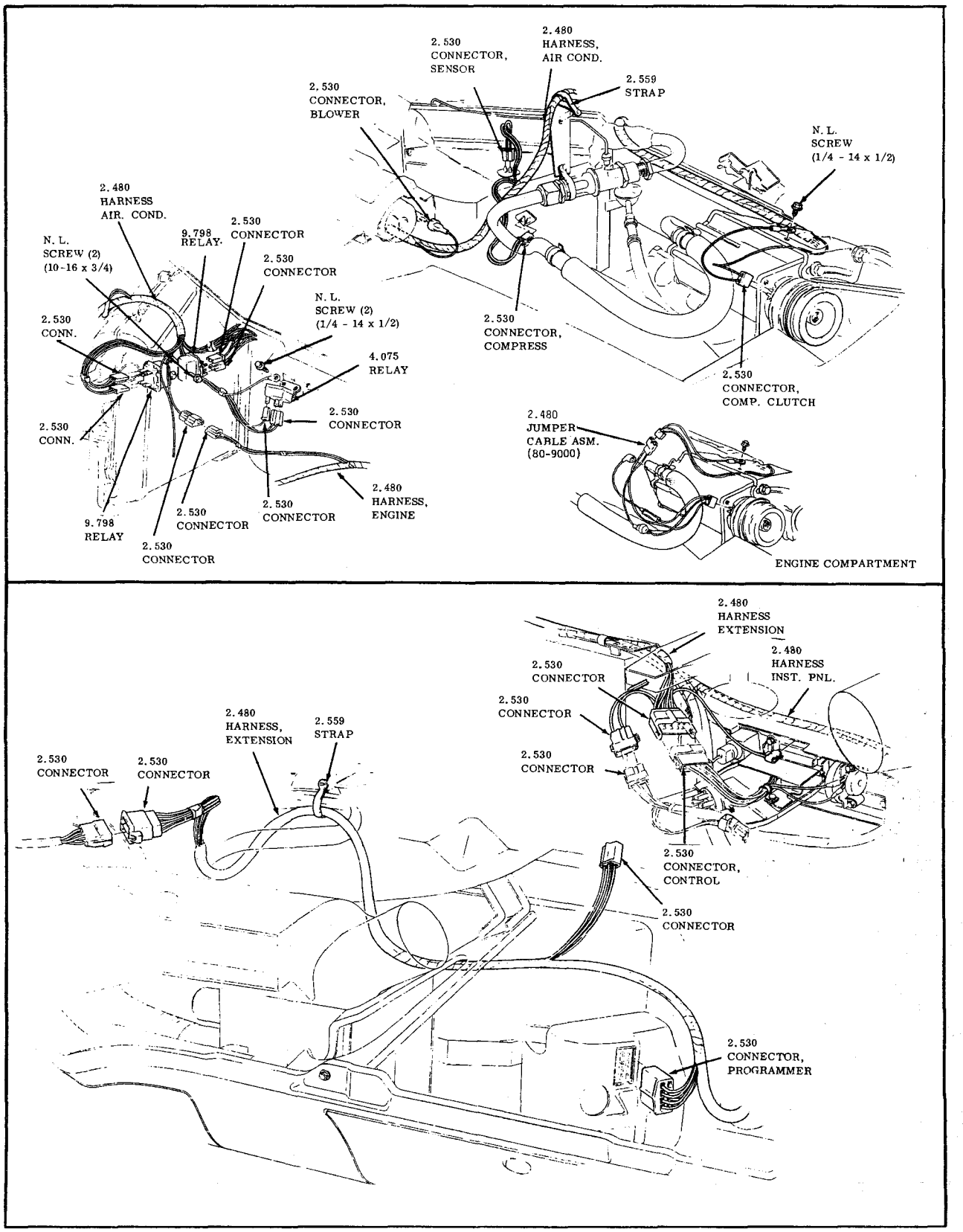

AUTOMATIC CLIMATIC CONTROL WIRING

1971-1972 50-60-80-9000

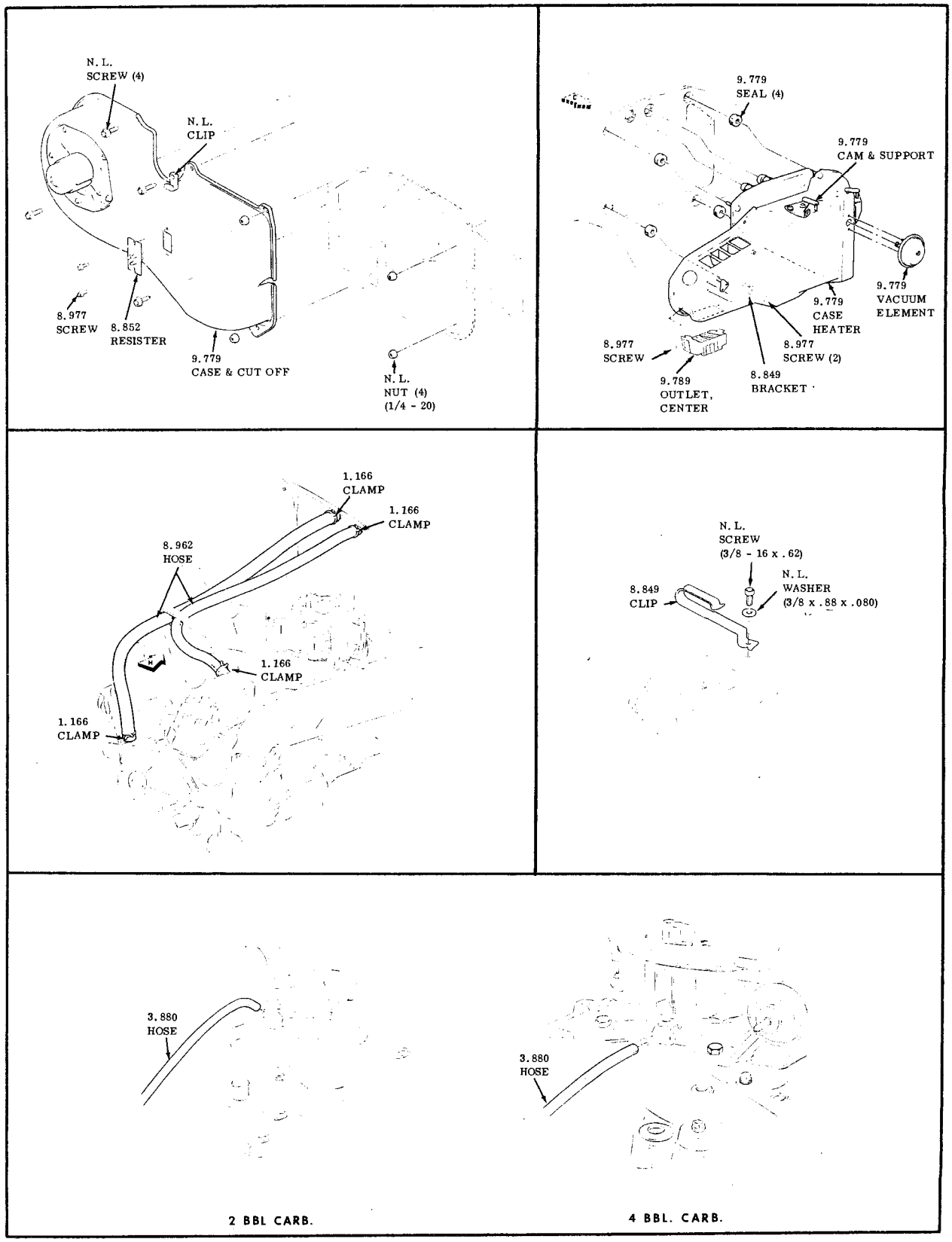

HEATER AND DEFROSTER
1971-1972 50-60-80-9000

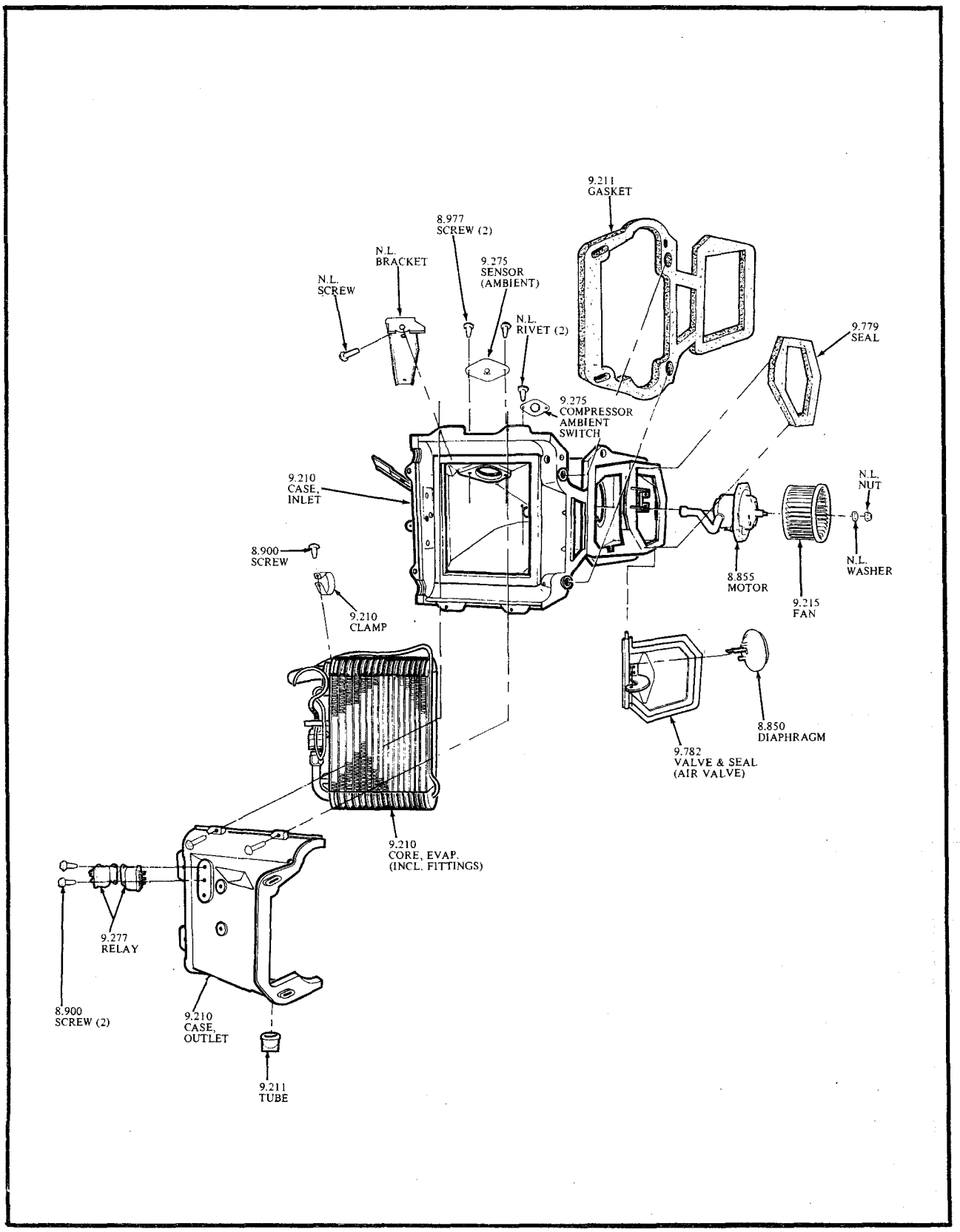

EVAPORATOR AND BLOWER (AUTOMATIC)

1971 - 1972 50-60-80-9000

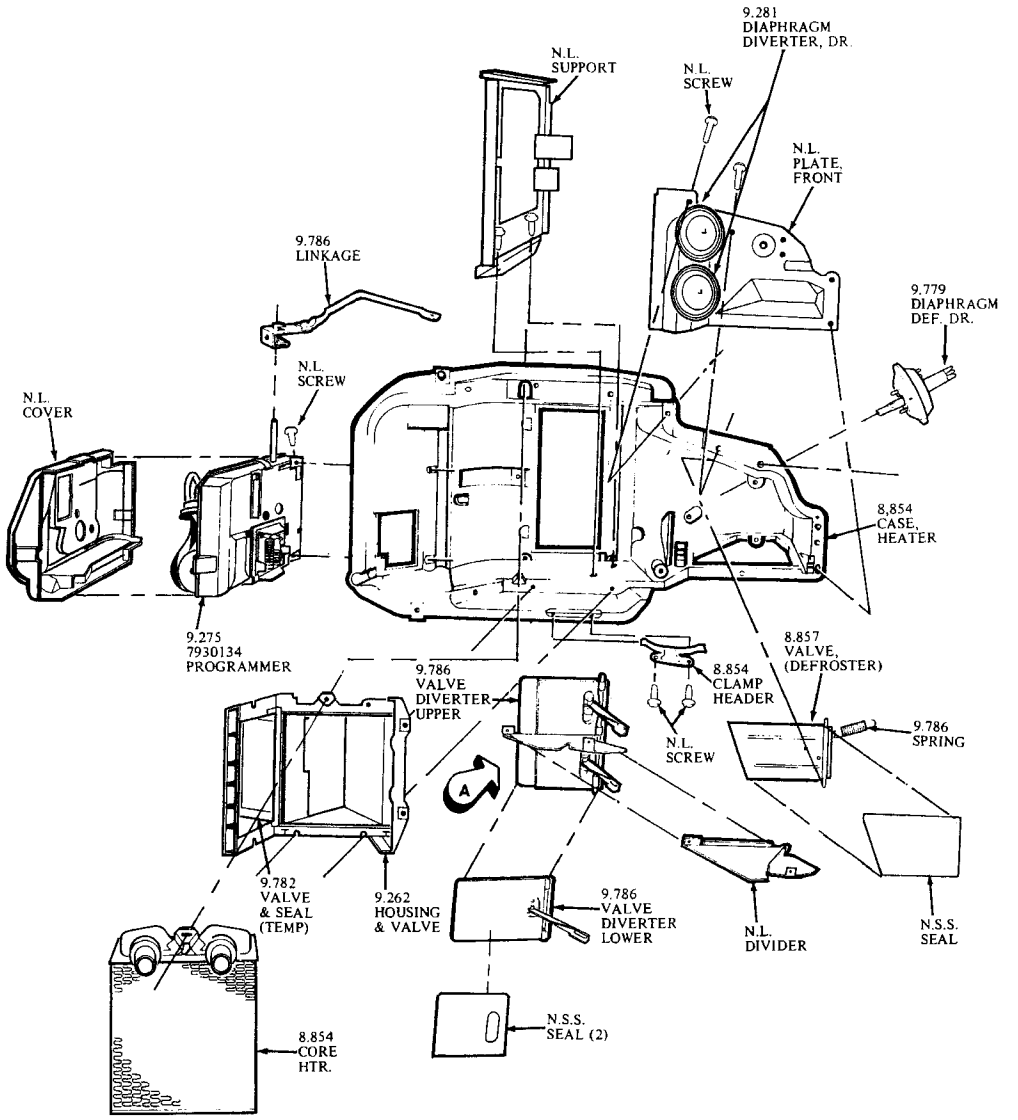

HEATER AND AIR CONDITIONING (AUTOMATIC)

1971 - 1972 50-60-80-9000

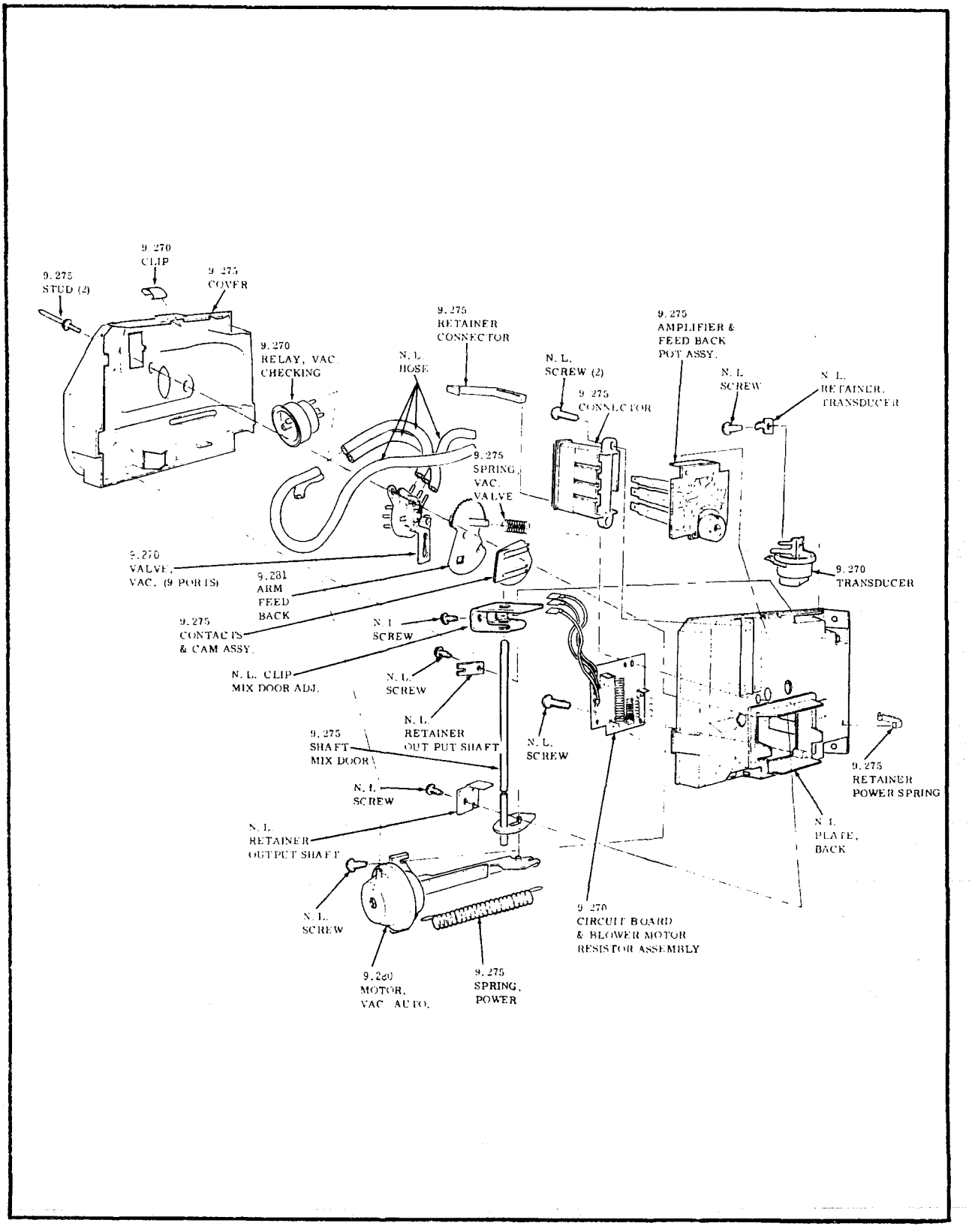

AUTOMATIC TEMPERATURE CONTROL

PROGRAMMER

1971 - 1972 50-60-80-9000

MEMORANDA

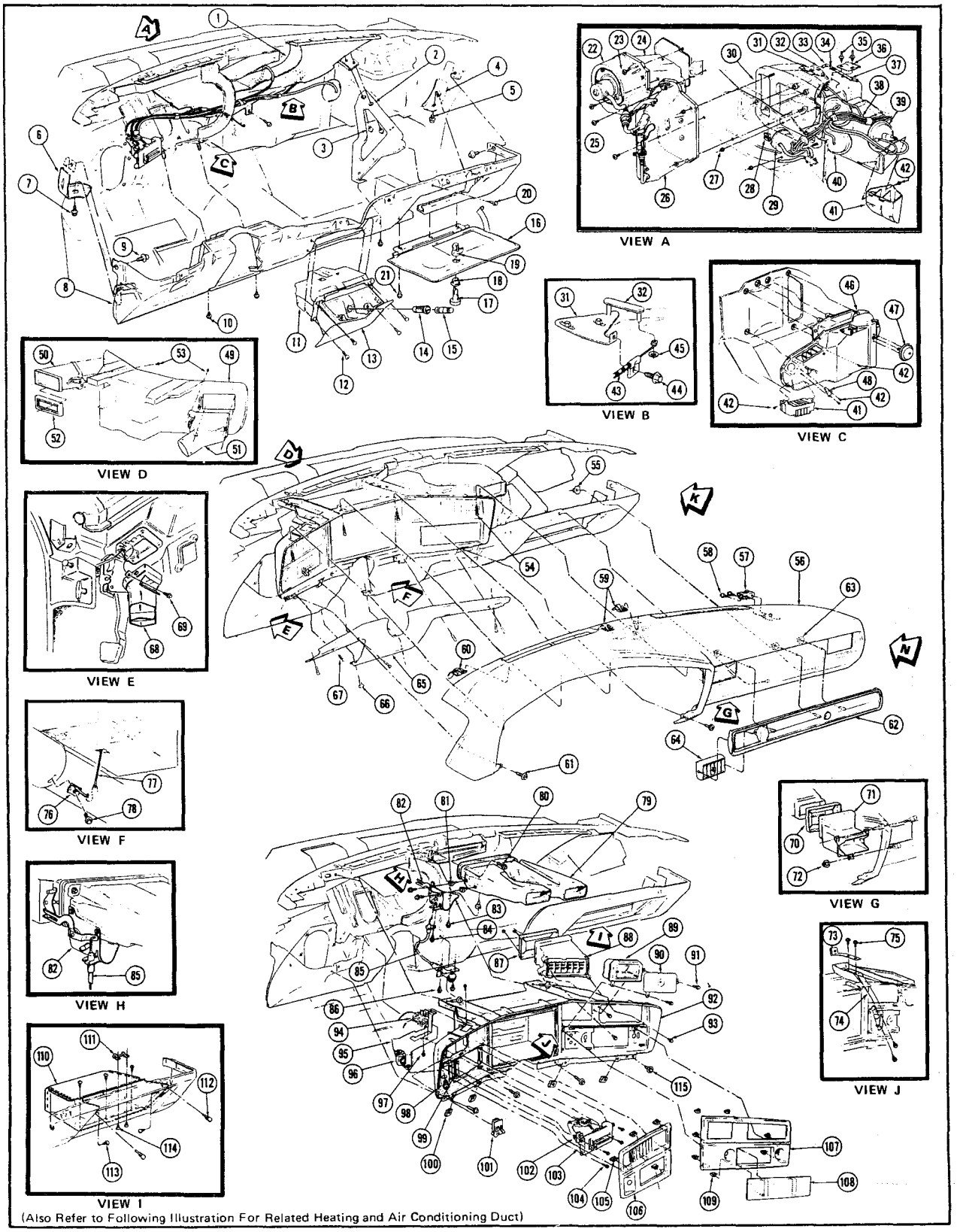

(Also Refer to Following Illustration For Related Heating and Air Conditioning Duct)

INSTRUMENT PANEL
1971-72-B-C-E

INSTRUMENT PANEL
1971-72-B-C-E

1.	NOZZLE, Defroster Air	9.779
2.	SUPPORT, Instrument Panel, Center	10.230
3.	SCREW, Instrument Panel Ctr. (5/16-12 x 3/4) (2)	N.L.
4.	SUPPORT, Instrument Panel, End (Rt.)	10.230
5.	SCREW, Instrument Panel End (5/16-12 x 3/4)	N.L.
6.	SUPPORT, Instrument Panel, End (Lt.)	10.230
7.	SCREW, Instrument Panel End (5/16-12 x 3/4)	N.L.
8.	PANEL, Instrument, Lower	10.230
9.	SCREW, Instrument Panel Lower (1/4-14 x 1) (2)	N.L.
10.	SCREW, Instrument Panel Lower (1/4-14 x 3/4) (2)	N.L.
11.	TRAY, Ash Receiver	9.766
12.	SCREW, Tray Ash (8-18 x 1/2) (4)	N.L.
13.	RECEIVER, Ash Trav	9.766
14.	CASE & CIRCUIT BREAKER, Cigar Lighter	9.709
15.	ELEMENT & KNOB, Cigar Lighter	9.709
16.	DOOR, Instrument Panel Compartment	10.261
17.	CYLINDER, Instrument Panel Compartment Door	10.266
18.	ESCUTCHEON, Instrument Panel Compartment Lock	10.267
19.	CASE & ROTOR, Instrument Panel Compartment Lock	10.266
20.	SCREW, Instrument Panel Center (1/4-14 x 1/2) (2)	N.L.
21.	SCREW, Compartment Door to Lower Panel (8-18 x 9/16) (3)	N.L.
22.	MOTOR, Heater & Defroster and Air Conditioning	8.855
23.	SCREW, Motor & Case to Fire Wall (1/4-14 x 1 1/2) (5)	N.L.
24.	INLET, Evaporator Air	9.789
25.	VALVE, Suction Throttling	9.198
26.	CASE, Evaporator	9.211
27.	NUT, Evaporator Case to Heater Case (1/4-20) (3)	N.L.
28.	NUT, Heater to Fire Wall	N.L.
29.	TANK, Vacuum	9.281
30.	CASE, Heater	9.786
31.	CAM & SUPPORT, Heater	9.786
32.	SHAFT & LEVER, (Slave Valve)	9.786
33.	LINK, Slave Valve	9.786
34.	LINK, Diverter	9.786
35.	RIVET, Clip Heater Case (2)	N.L.
36.	CLIP, Heater Case to Retain Duct	9.786
37.	SHAFT & LEVER, Diverter	9.786
38.	HARNESS, Vacuum Hose	9.798
39.	DIAPHRAGM, Defroster Door	9.779
40.	DIAPHRAGM, Mode Doors (Upper & Lower) (2)	9.281
41.	OUTLET, Heater Center	9.789
42.	SCREW, Distr. Duct to A/C Heater Case	8.977
43.	WIRE, Control (Temperature)	9.798
44.	SCREW, Control Wire to Cam & Support (10-6 x 1/2 x 2)	N.L.
45.	WASHER, Control Wires (2)	9.787
46.	CASE, Heater	8.854
47.	DIAPHRAGM, Purge Door	8.850
48.	BRACKET, Defroster Cable Mounting	9.786
49.	HOUSING, Instrument Panel	9.743
50.	OUTLET, Instrument Panel Housing (Rt.)	9.262
51.	OUTLET, Instrument Panel Housing (Lt.)	9.262
52.	SEAL, Air Outlet	9.779
53.	SCREW, Outlet To Housing (8-18 x 5/8) (AR.)	N.L.
54.	SCREW, Instrument Panel Housing to Cover (8-18 x 5/8) (4)	N.L.
55.	NUT, Instrument Panel Cover to Lower Panel	N.L.
56.	COVER, Instrument Panel	14.655
57.	CLIP, Instrument Panel Cover (Rt.)	14.655
58.	SCREW, Clip to Instrument Panel Cover (8-18 x 9/16) (2)	N.L.
59.	CLIP, Instrument Panel Cover (Center) (2)	14.655
60.	CLIP, Instrument Panel Cover (Lt.)	14.655
61.	SCREW, Instrument Panel Cover to Housing (8-18 x 5/8) (2)	N.L.
62.	MOLDING, Instrument Panel Cover	10.252
63.	NUT, Molding to Instrument Panel (10-24) (3)	N.L.
64.	OUTLET, Instrument Panel Cover Outer (2)	9.789
65.	FILLER, Steering Column Hole Cover	6.518
66.	SCREW, Filler to Lower Instrument Panel (8-18 x 5/8) (2)	N.L.
67.	SCREW, Filler to Lower Instrument Panel (8-18 x .88) (4)	N.L.
68.	GRILLE, Outside Air Lower Left	9.789
69.	SCREW, Grille to Plenum Duct (8-18 x 1/2)	N.L.
70.	SEAL, Air Outlet Center	9.779
71.	DUCT, Air Outlet Center	9.262
72.	NUT, Duct to Instrument Panel (10-24) (3)	N.L.
73.	STRAP, Radio To Upper Instrument Panel	N.L.
74.	SUPPORT, Radio to Upper Instrument Panel	9.667
75.	SCREW, Support to Upper Instrument Panel (8-18 x 5/8) (4)	N.L.
76.	CLIP, Transmission Shift Indicator	4.022
77.	CABLE, Transmission Shift Indicator	N.S.S.
78.	SCREW, Clip to Steering Column (8-18 x 3/8)	N.L.
79.	DUCT, Ventilation Upper Center	9.781
80.	SCREW, Duct Ventilator to Outlet Center (10-16 x 3/4)	N.L.
81.	NUT, Toggle, Lever to Duct (3)	9.786
82.	LEVER, Upper Air Vent	9.790
83.	SCREW, Lever Asm. to Duct (8-18 x 5/8) (3)	N.L.
84.	SCREW, Control to Lever	8.977
85.	CONTROL, Center Air Vent	9.787
86.	SCREW, Control to Lower Panel, (2)	8.977
87.	SEAL, Duct Outlet (Rt.)	9.779
88.	DUCT, Outlet (Rt.)	9.789
89.	CLOCK INSTRUMENT PANEL	9.772
90.	COVER, Clock Opening	9.772
91.	SCREW, Clock to Instrument Panel (8-18 x 5/8) (2)	N. L.
92.	HOUSING, Instrument Panel	9.743
93.	SCREW, Duct to Housing (8-18 x 5/8) (3)	N.L.
94.	SEELITE, Central Light Source	2.580
95.	SUPPORT, Heater Control	9.798
96.	SWITCH, Headlamp	2.485
97.	SCREW, Seelite to Support (8-18 x 5/8)	N.L.
98.	NUT, Light Switch Retainer	2.485
99.	CLIP, Control to Instrument Panel (2" long - 2 Mtg. Holes)	8.852
100.	NUT, Housing to Instrument Panel Lower (4)	N.L.
101.	SWITCH & LENS, Windshield Wiper	10.163
102.	SWITCH, Blower Heater Control	8.852
102.	SWITCH, Blower Air Conditioning Control	9.275
103.	CONTROL, Heater	8.849
103.	CONTROL, Air Conditioning	9.273
104.	SCREW, Control to Housing (8-18 x 5/8) (4)	N.L.
105.	CLIP, Accessory Plate to Instrument Panel Housing (4)	9.740
106.	PLATE, Instrument Panel Trim (Lt.)	10.252
107.	PLATE, Instrument Panel Trim (Rt.)	10.252
108.	COVER, Instrument Panel Radio Opening	10.256
109.	CLIP, Accessory Plate to Instrument Panel Housing (7)	9.740
110.	BODY, Instrument Panel Compartment	10.260
111.	STRIKER, Instrument Panel Compartment Door	10.268
112.	BUMPER, Instrument Panel To Compartment Door (2)	9.766
113.	SCREW, Body Instrument Panel Compartment to Panel Lower (8-18 x .62) (5)	N.L.
114.	SCREW, Striker to Body (8-18 x 1/2) (2)	N.L.
115.	SCREW, Instrument Panel Housing to Frame (8-18 x 5/8) (6)	N.L.

(Also Refer to Following Illustration For Related Heating and Air Conditioning Duct)

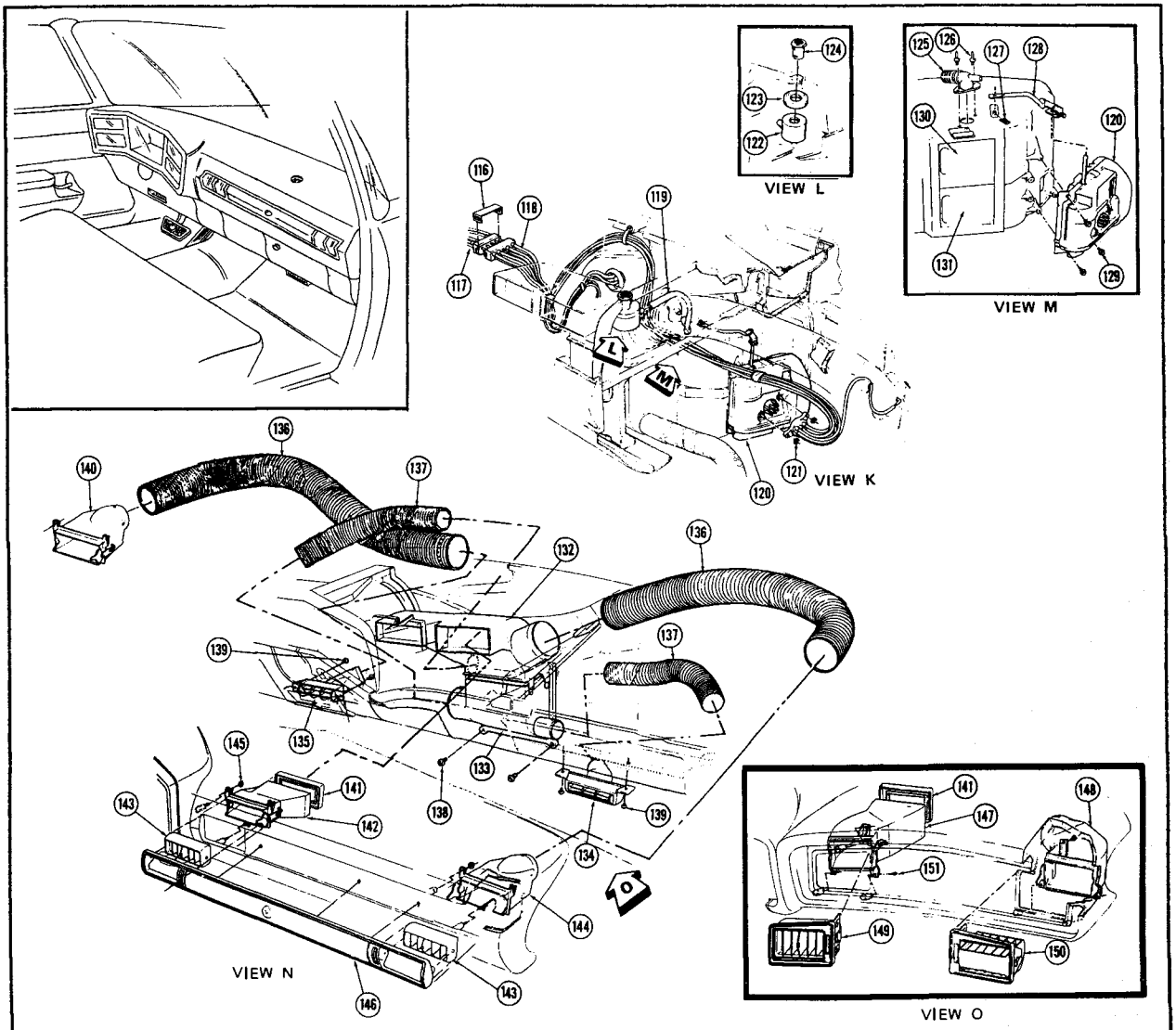

116.	CLIP, Instrument Panel Control Harness to A.C. Heater Harness	2.559
117.	HARNESS, Vacuum Instrument Panel Control Unit	9.798
118.	HARNESS, Vacuum Programmer	9.798
119.	HOSE, Vacuum (3/32 x 16.5)	8.962
120.	PROGRAMMER, Automatic Air Conditioning	9.275
121.	WASHER, Spec. Spring Grip Control (2)	9.787
122.	SENSOR, In Car Auto. Air Conditioning Control	9.276
123.	SPACER, In Car Sensor	9.275
124.	GRILLE, Auto. Temperature Control	9.275
125.	ASPIRATOR & SHIELD, Air Conditioning Control	9.275
126.	RIVET, Aspirator & Shield to Case	N.L.
127.	CLIP, Program Link to Heater Case	9.786
128.	LINKAGE, Temperature Door Connecting Program	9.276
129.	SCREW, Program to Heater (10/16 x 3/4) (3)	N.L.
130.	VALVE & SEAL, Diverter (Upper)	9.786
131.	VALVE & SEAL, Diverter (Lower)	9.786
132.	DUCT, Air Conditioning Distributor (Upper)	9.260
133.	DUCT, Air Conditioning Distributor (Lower)	9.260
134.	OUTLET, Air Conditioning Inter. (Below Glove Box) (Hsg. & Vane) (Rt.)	9.262
135.	OUTLET, Air Conditioning Inter. (Hsg. & Vane) (Lt.)	9.262
136.	HOSE, Air (3 1/4" I.D.)	9.786
137.	HOSE, Air (1 1/2" I.D.)	9.786
138.	SCREW, Distributor Duct to Heater Case	8.977
139.	SCREW, Outlet to Lower Instrument Panel (8-18 x 9 /161 (2)	N.L.
140.	OUTLET, Instrument Panel Housing, Air Conditioning (Lt.)	9.262
141.	SEAL, Air Outlet	9.779
142.	DUCT, Instrument Panel Cover Air Conditioning (incl. Valve) (Lt.)	9.262
143.	OUTLET, Instrument Panel Cover Outer (Rt. Side of Instr. Pnl.) (2)	9.789
144.	DUCT, Instrument Panel Cover Air Conditioning (Incl. Valve)	9.262
145.	NUT, Duct to Instrument Panel Cover Molding (10-24) (6)	N.L.
146.	MOLDING, Instrument Panel Cove	10.252
147.	DUCT, Instrument Panel Cover (Center) (9000)	9.262
148.	DUCT, Instrument Panel Cover (Rt.) (9000)	9.262
149.	OUTLET, Instrument Panel Cover (Center) (9000)	9.262
150.	OUTLET, Instrument Panel Cover (Rt.) (9000)	9.262
151.	SCREW, Duct to Instrument Panel Cover Molding (9000) (8-18 x 9/16)	N.L.

(Also Refer to Previous Illustration For Related Instrument Panel Assembly.)

HEATING AND AIR CONDITIONING DUCT
1971-72-B-C-E

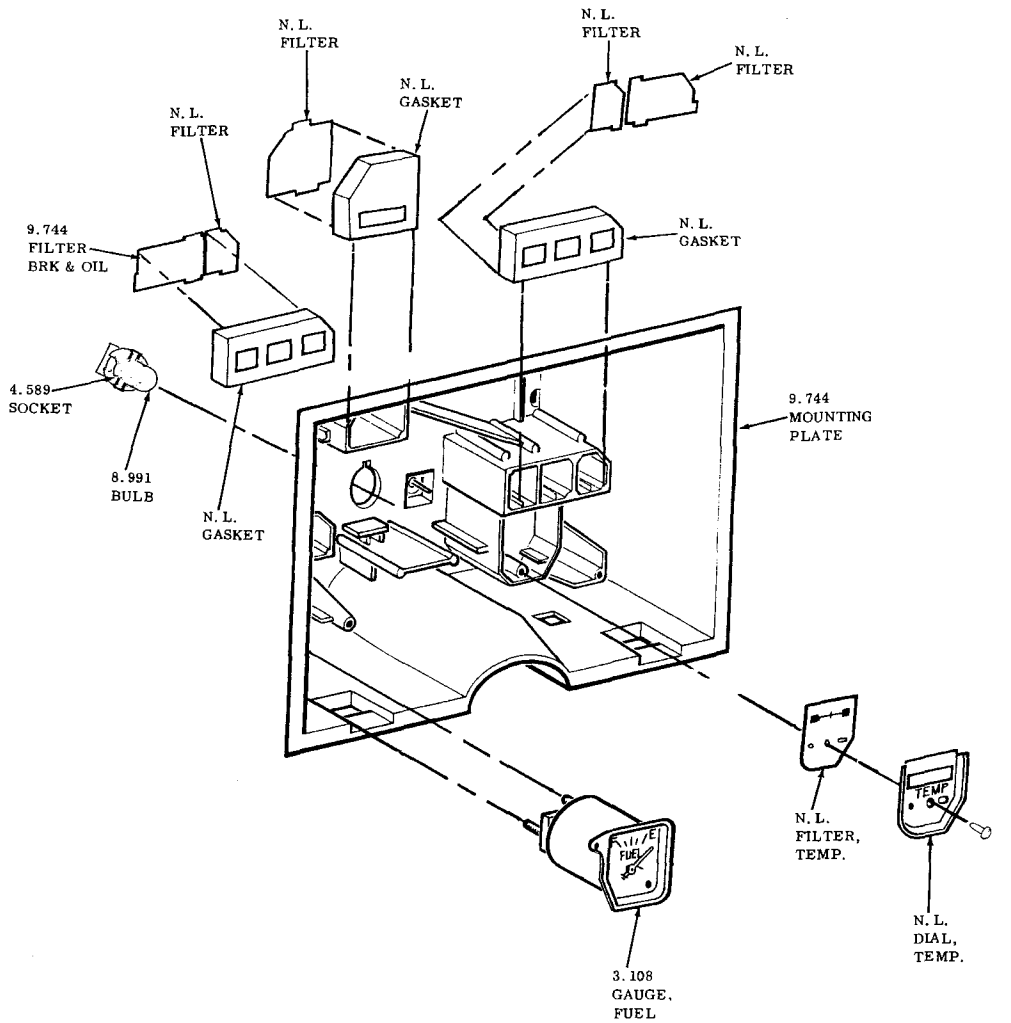

SPEEDOMETER CLUSTER

1971-1972 S0-60-80-9000

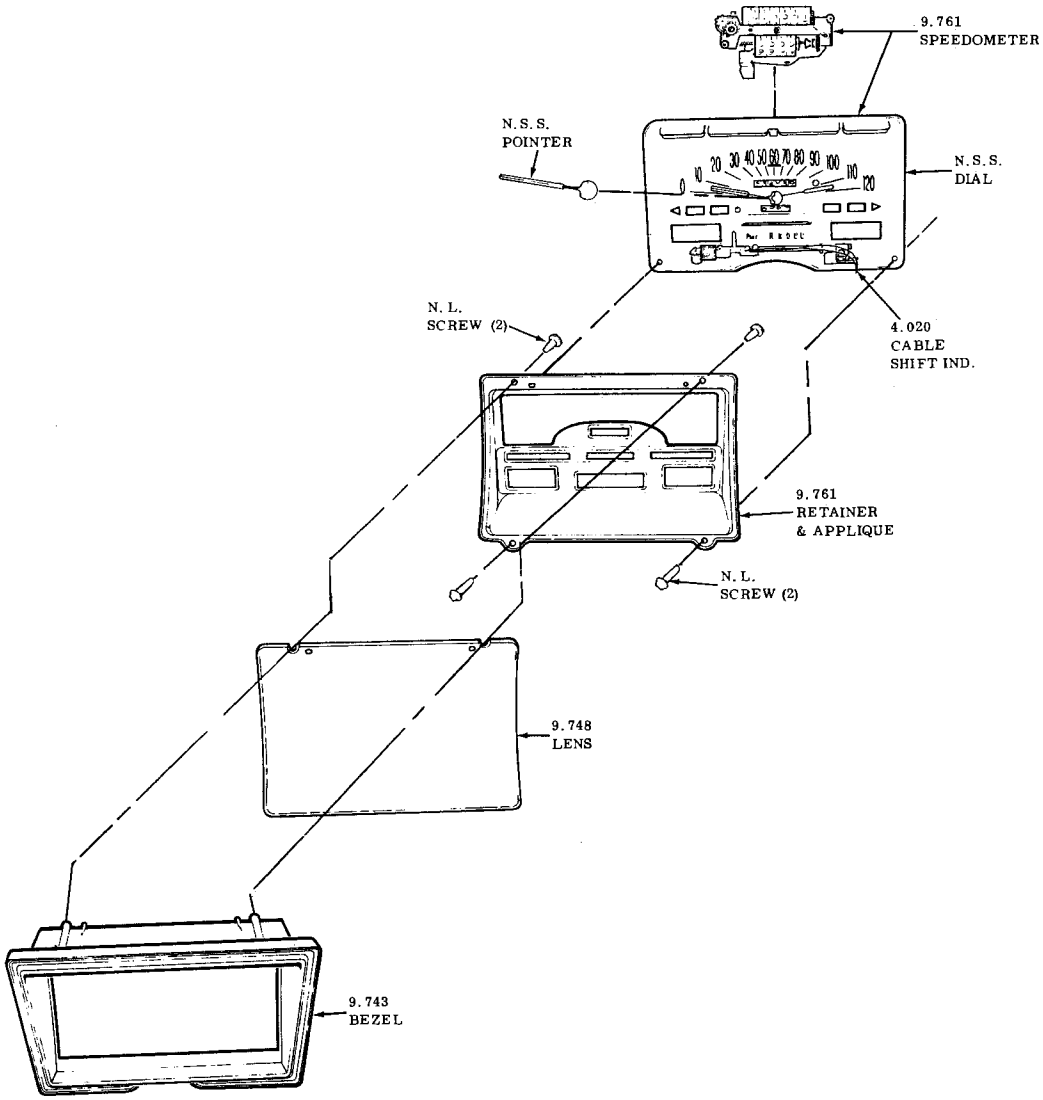

SPEEDOMETER CLUSTER

1971- 1972 50-60-80-9000

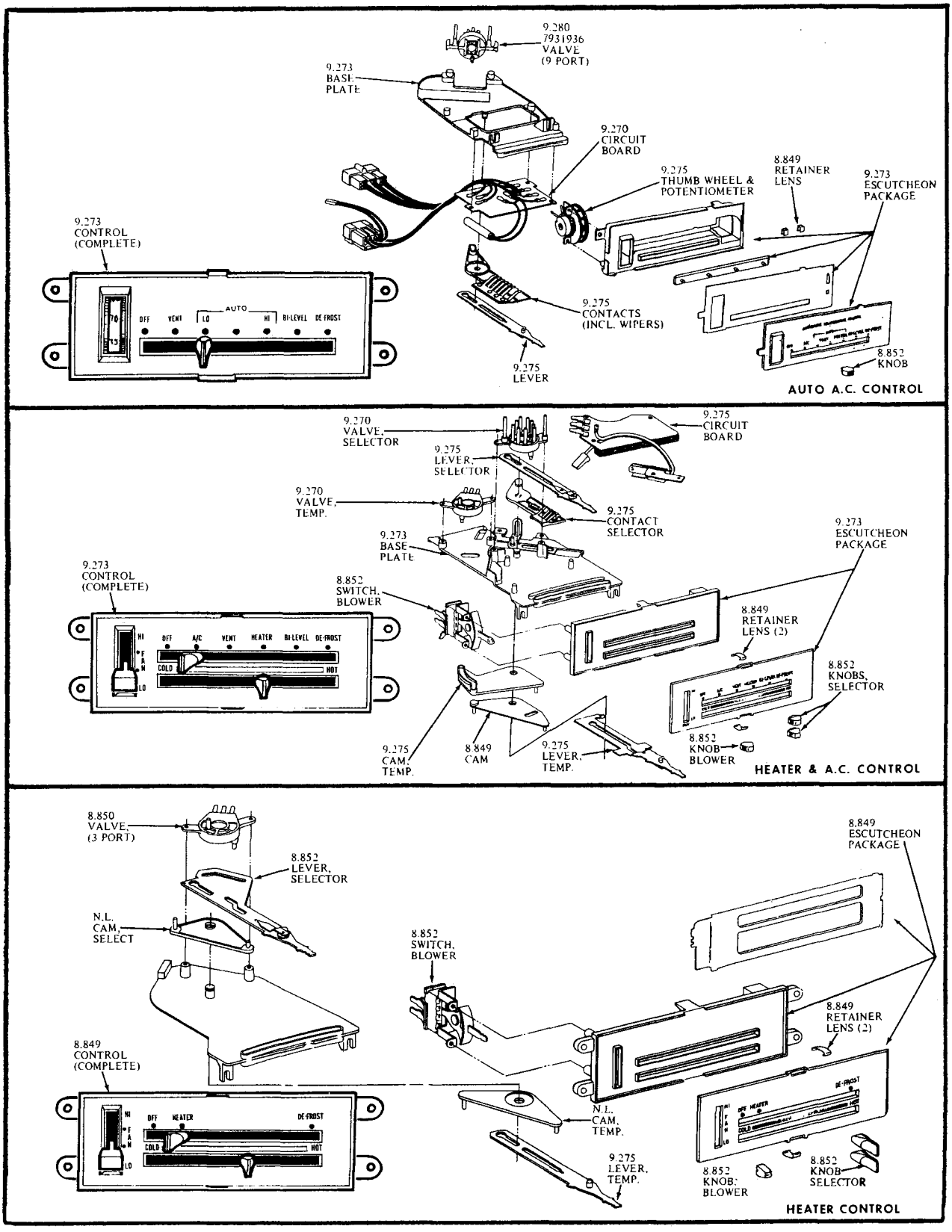

HEATER & AIR CONDITIONING CONTROLS

1971 - 1972 50-60-80-9000

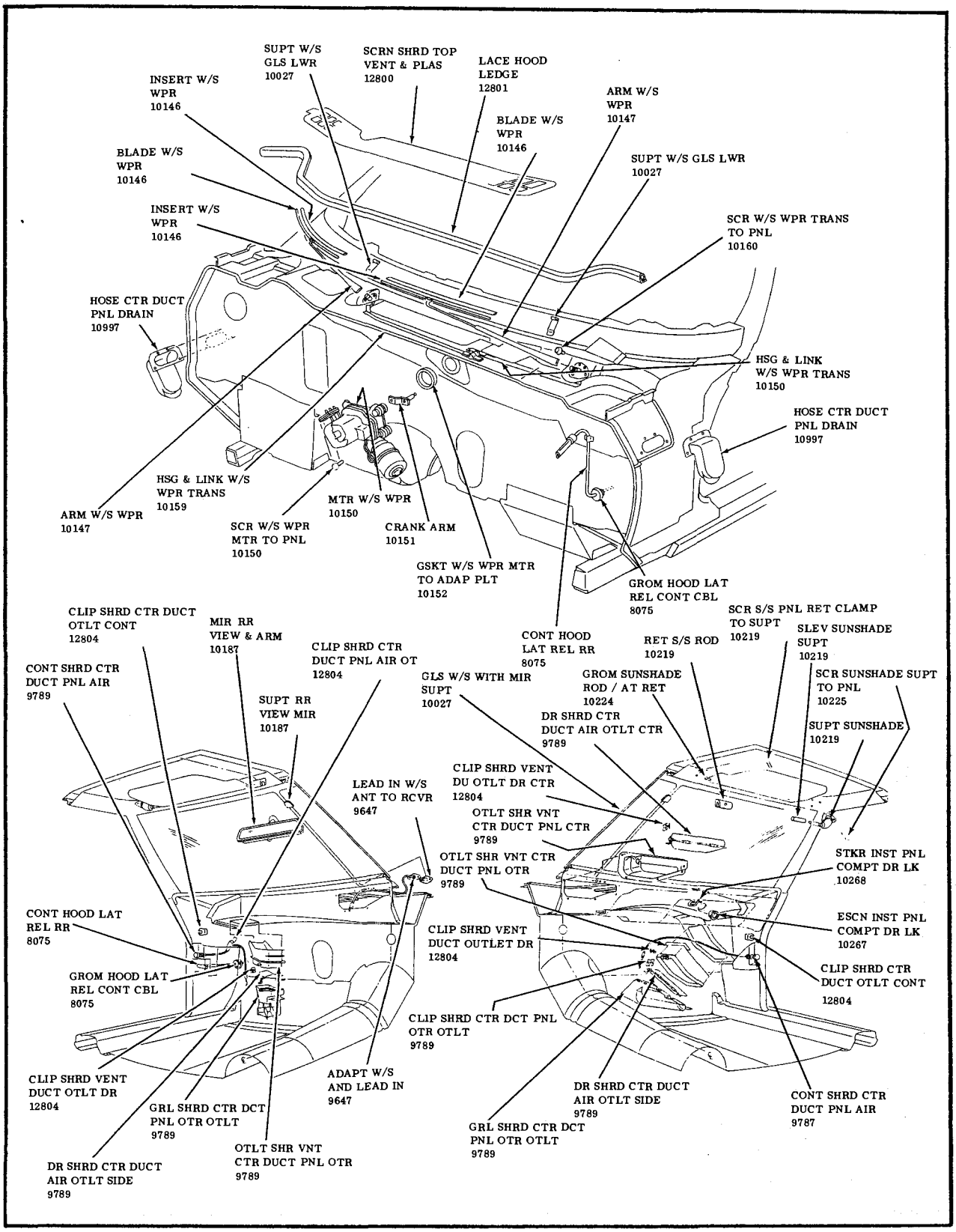

BODY FRONT END HARDWARE

1972-50-60-80-8000

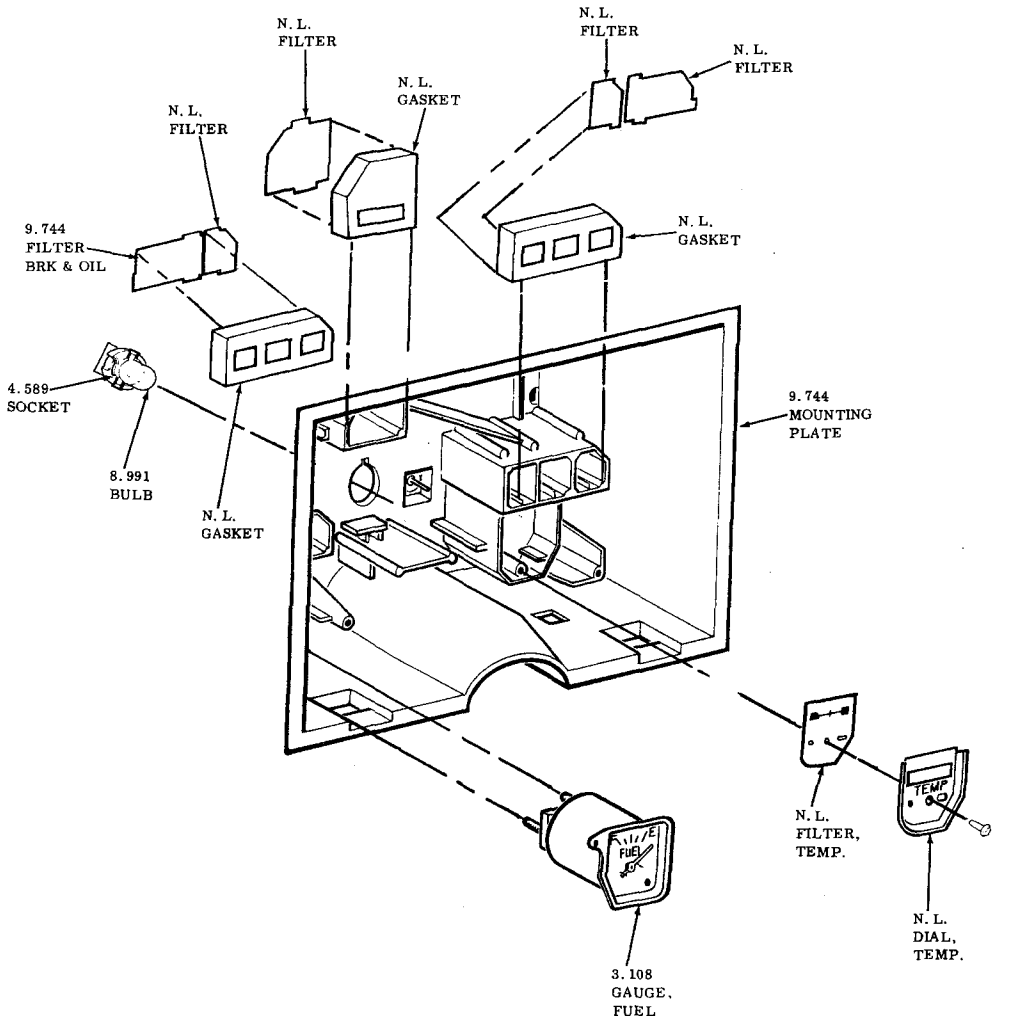

SPEEDOMETER CLUSTER

1971-1972 50-60-80-9000

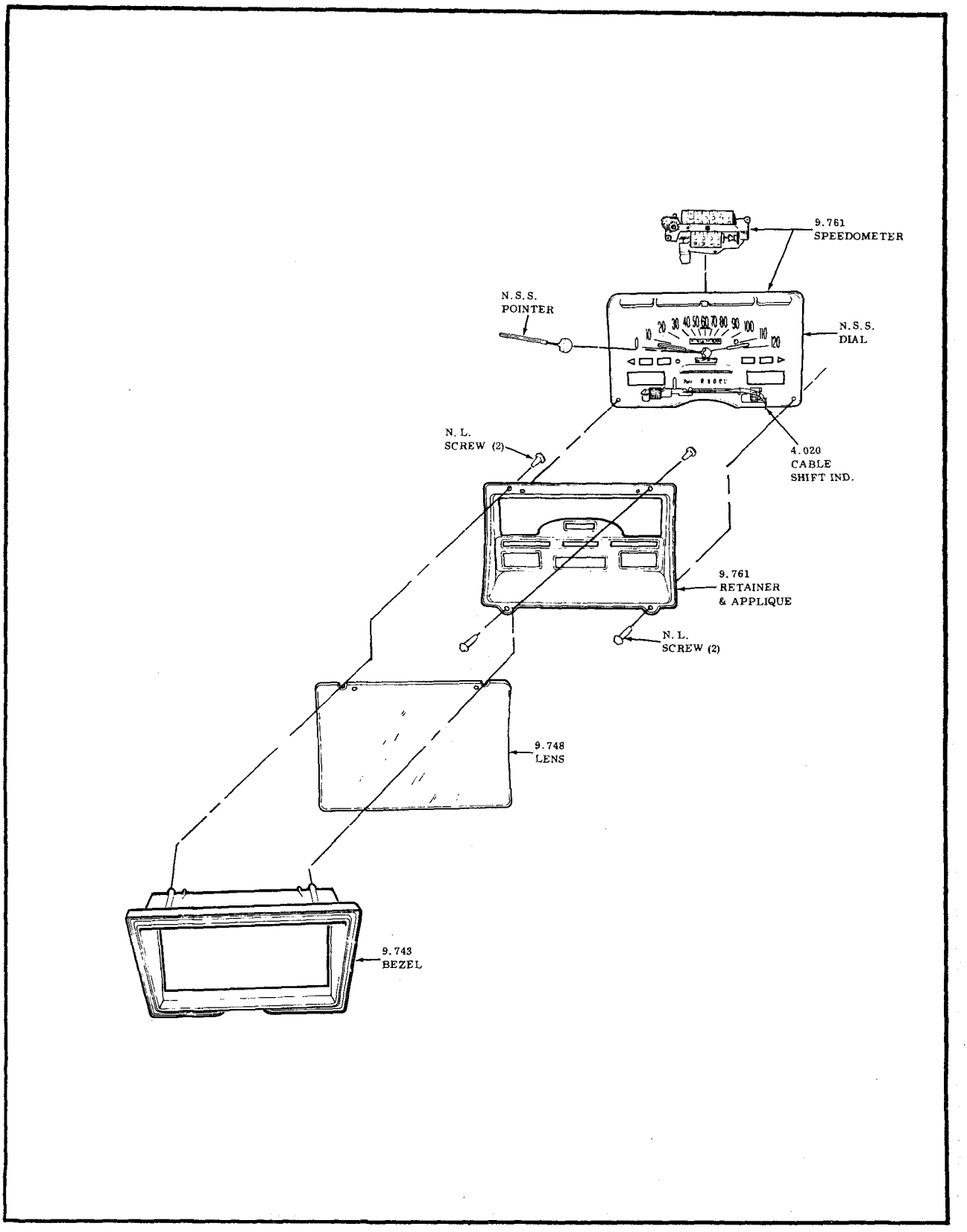

SPEEDOMETER CLUSTER

1971-1972 50-60-80-9000

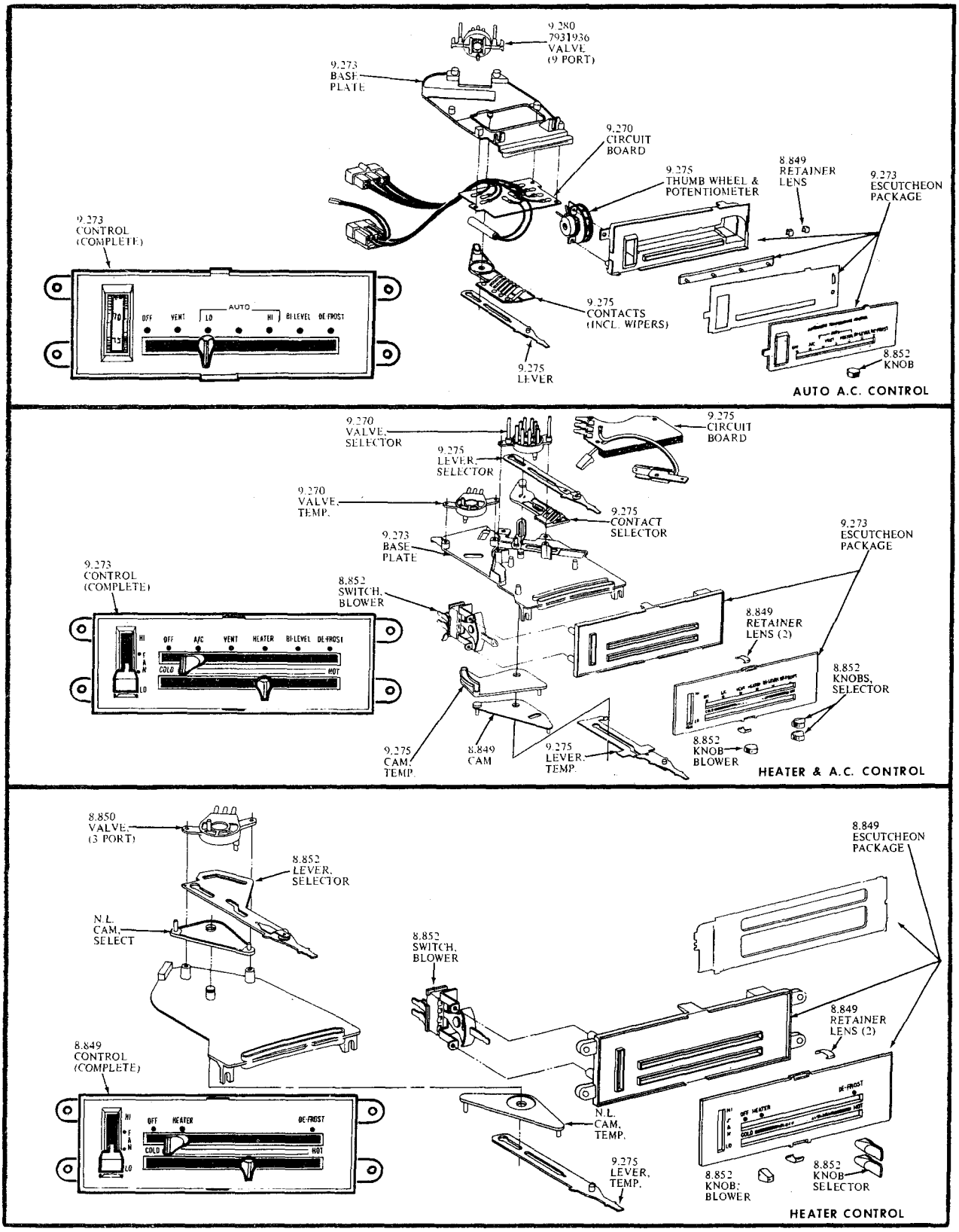

HEATER & AIR CONDITIONING CONTROLS

1971 - 1972 50-60-80-9000

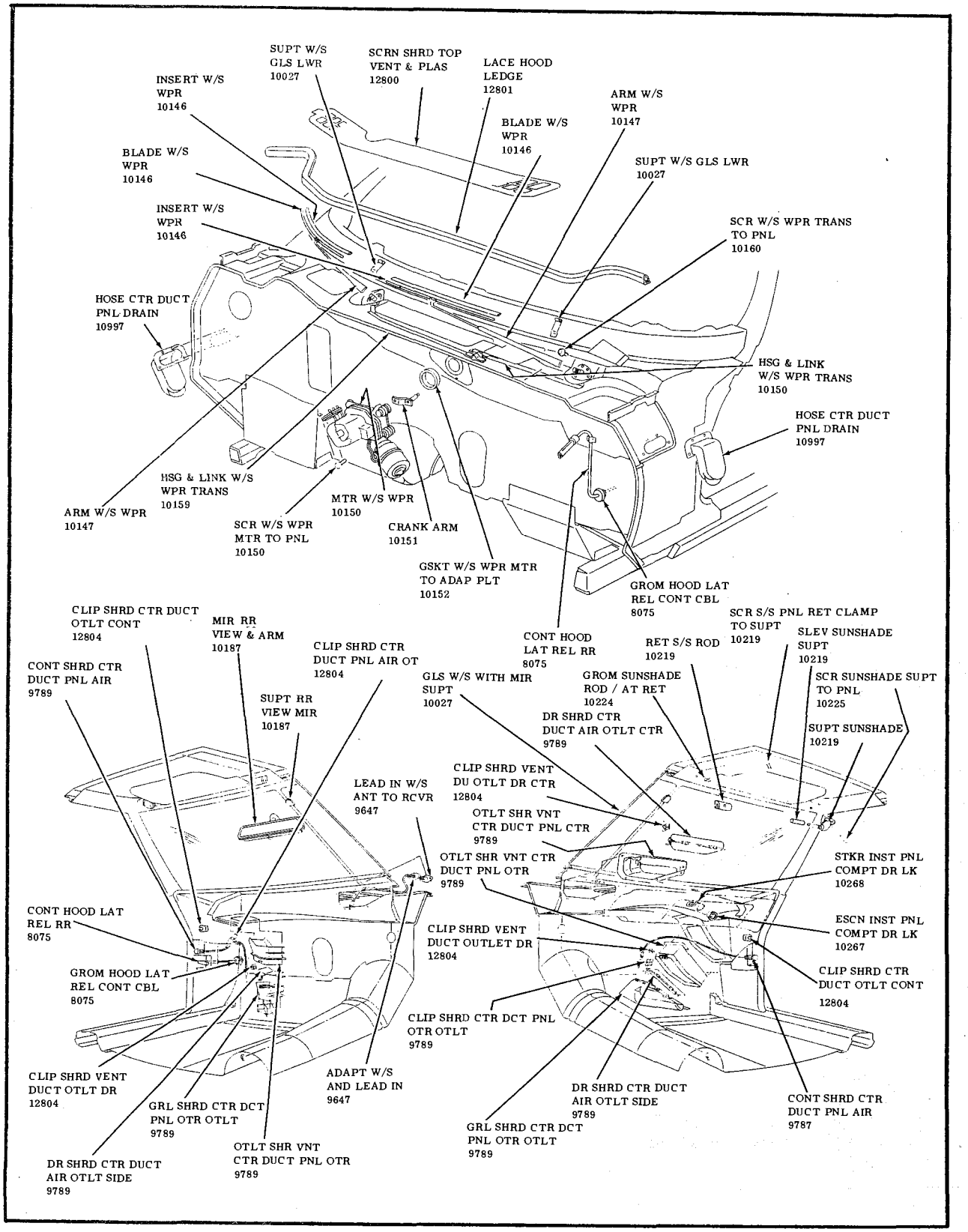

BODY FRONT END HARDWARE

1972-50-60-80-8000

GROUP 9

AIR CONDITIONING

INSTRUMENT CLUSTER PARTS

HEATER AND AIR CONDITIONING CONTROLS

MEMORANDA

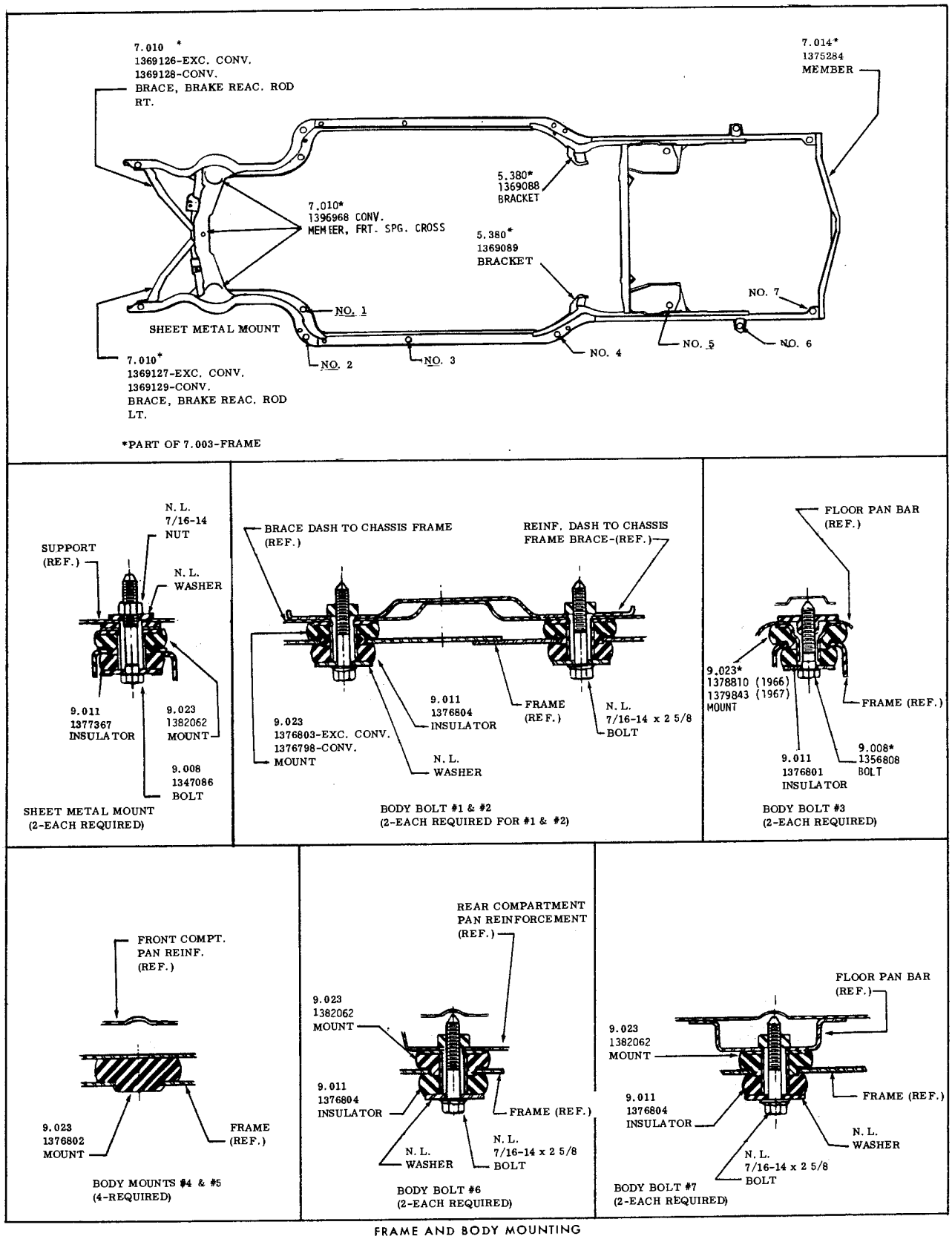

FRAME AND BODY MOUNTING
1966-1970 . LESABRE - WILDCAT - ELECTRA 225

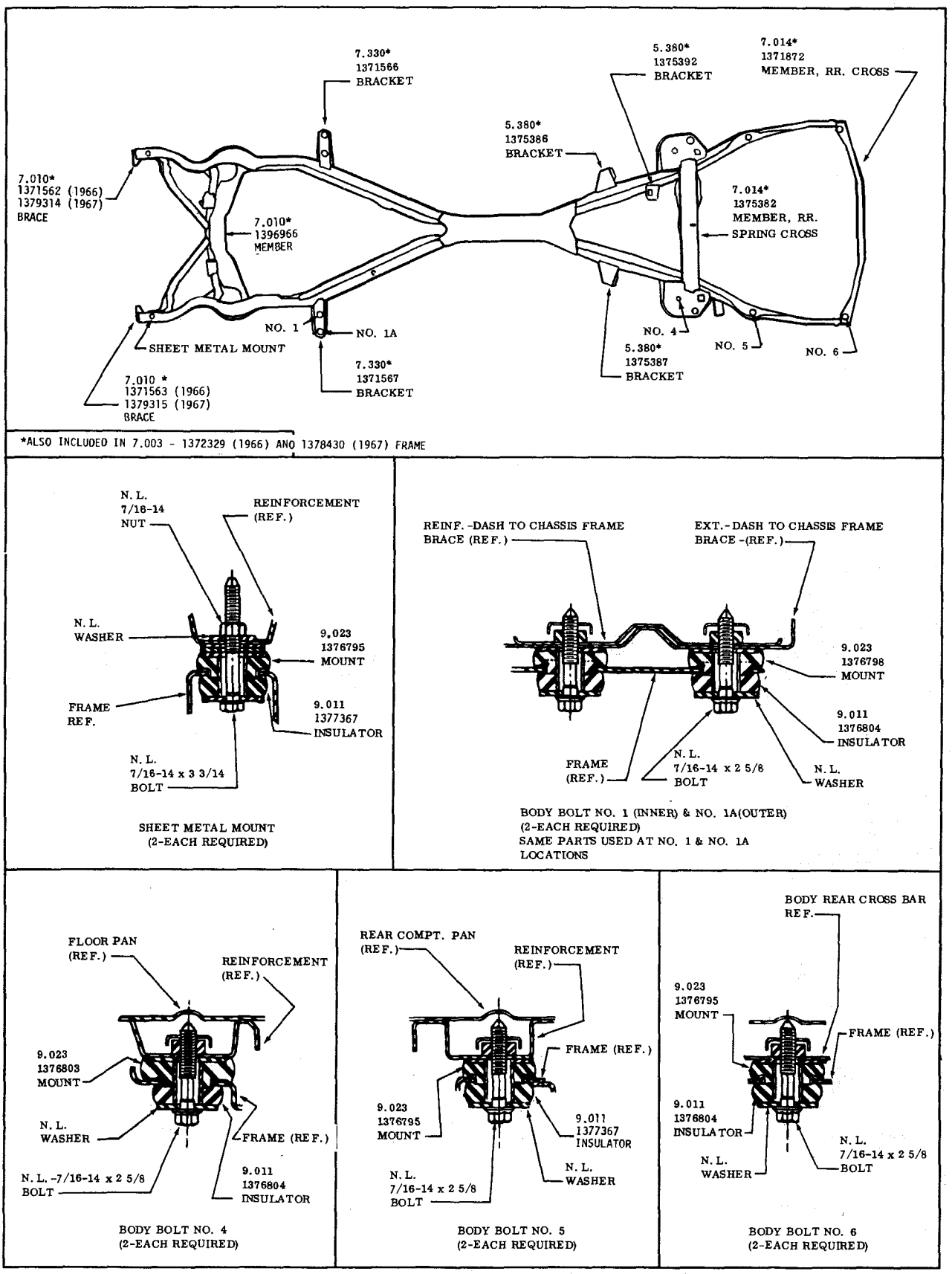

FRAME AND BODY MOUNTING
1966-1970 - RIVIERA

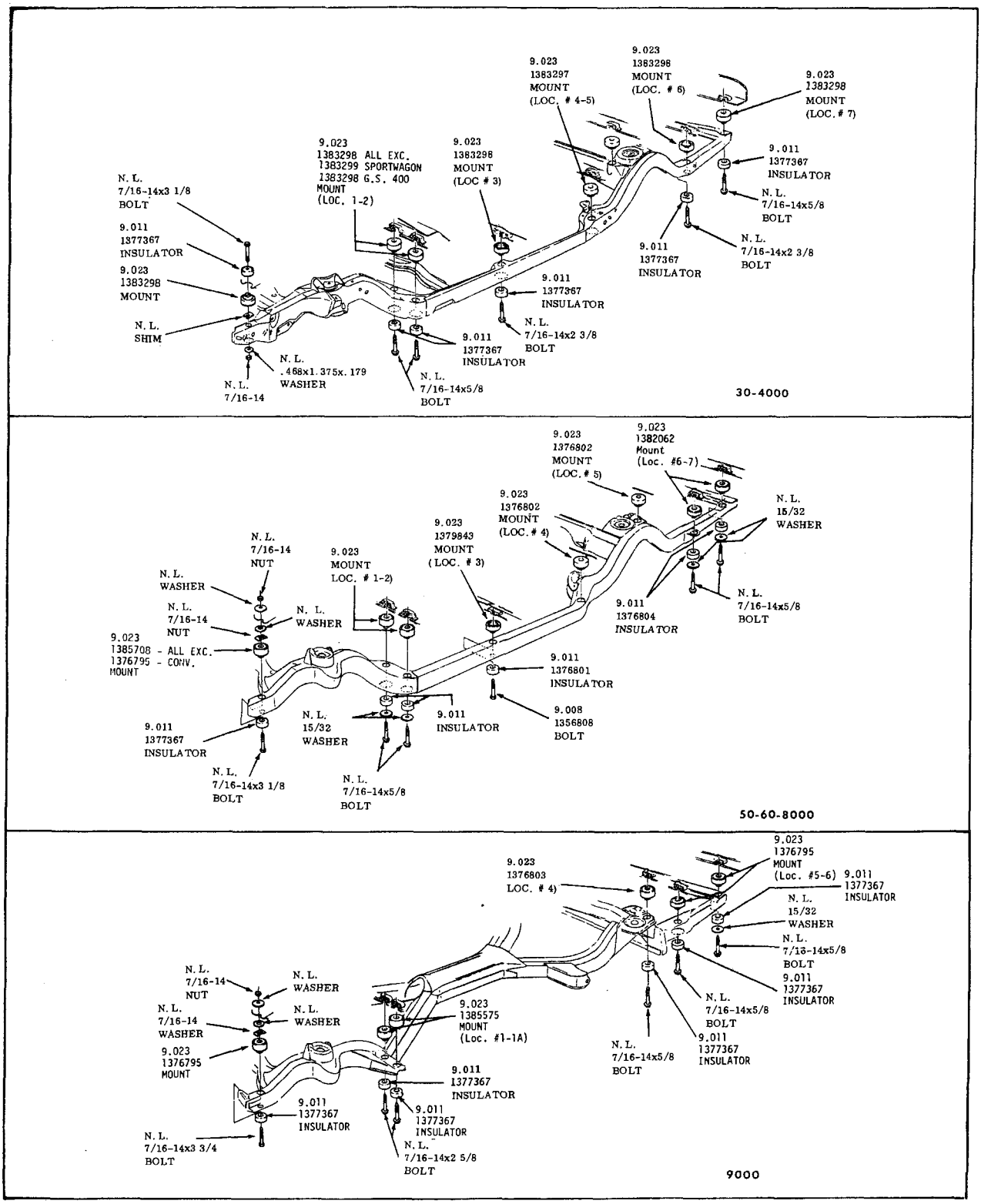

BODY MOUNTING
1968 - ALL

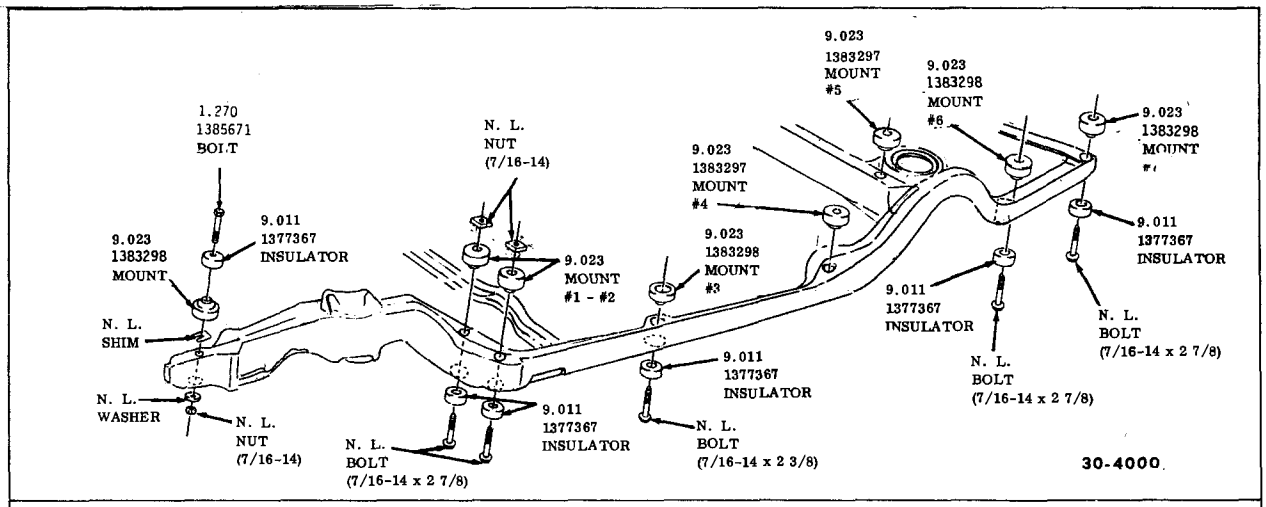

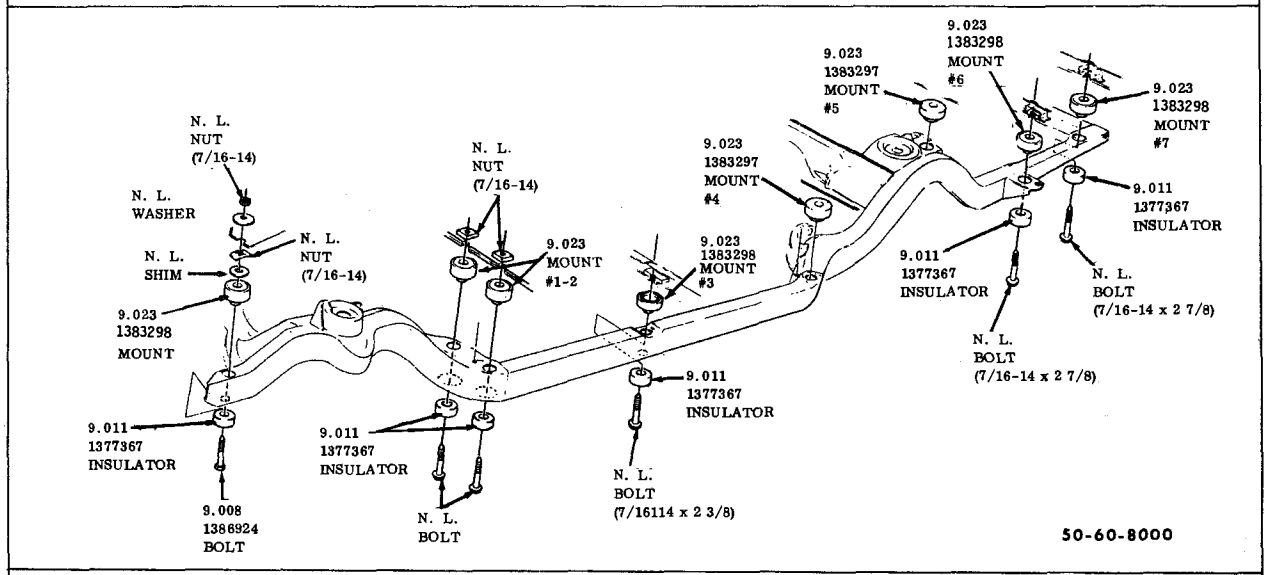

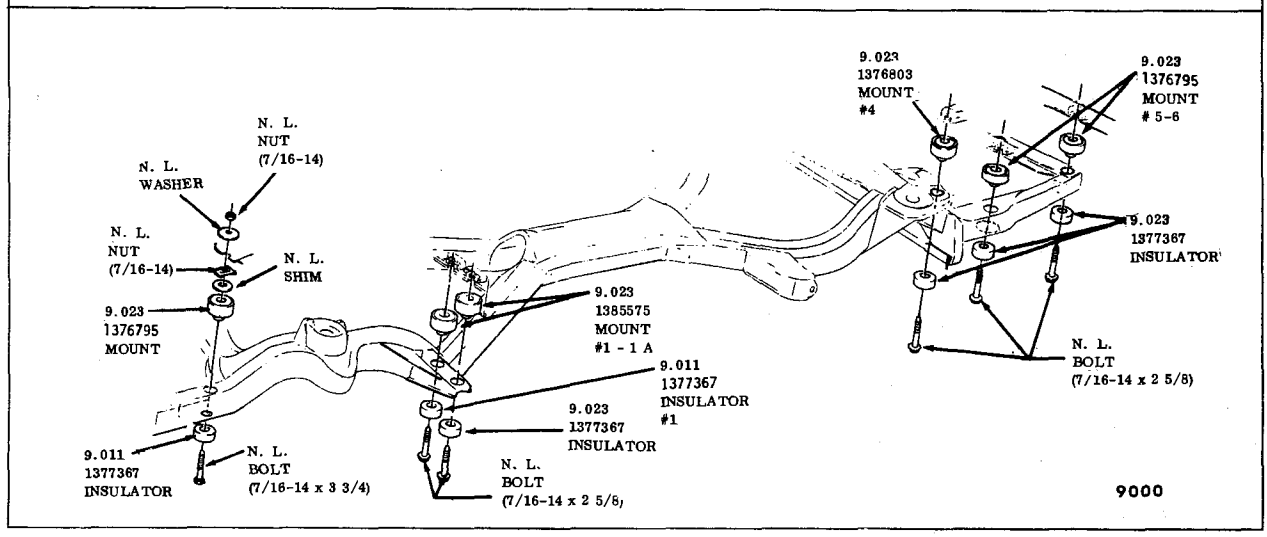

BODY MOUNTING
1969-1970 - ALL

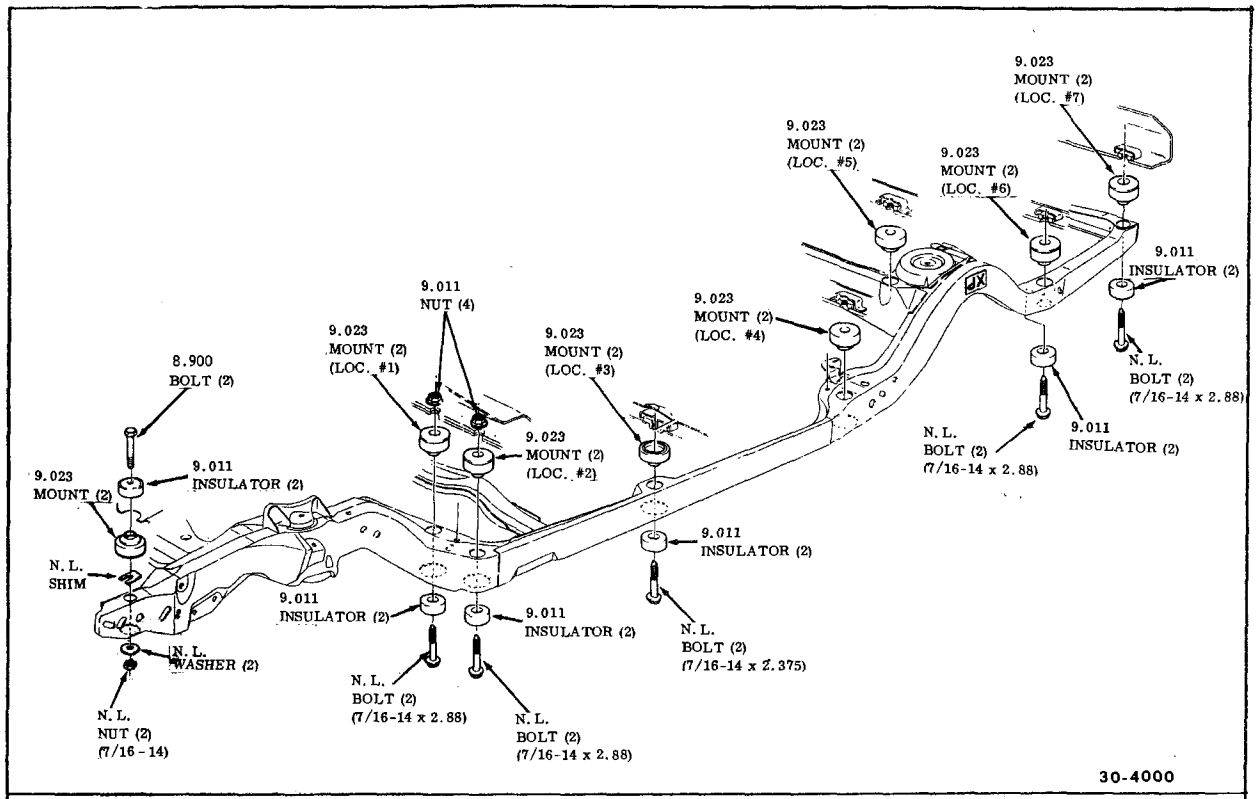

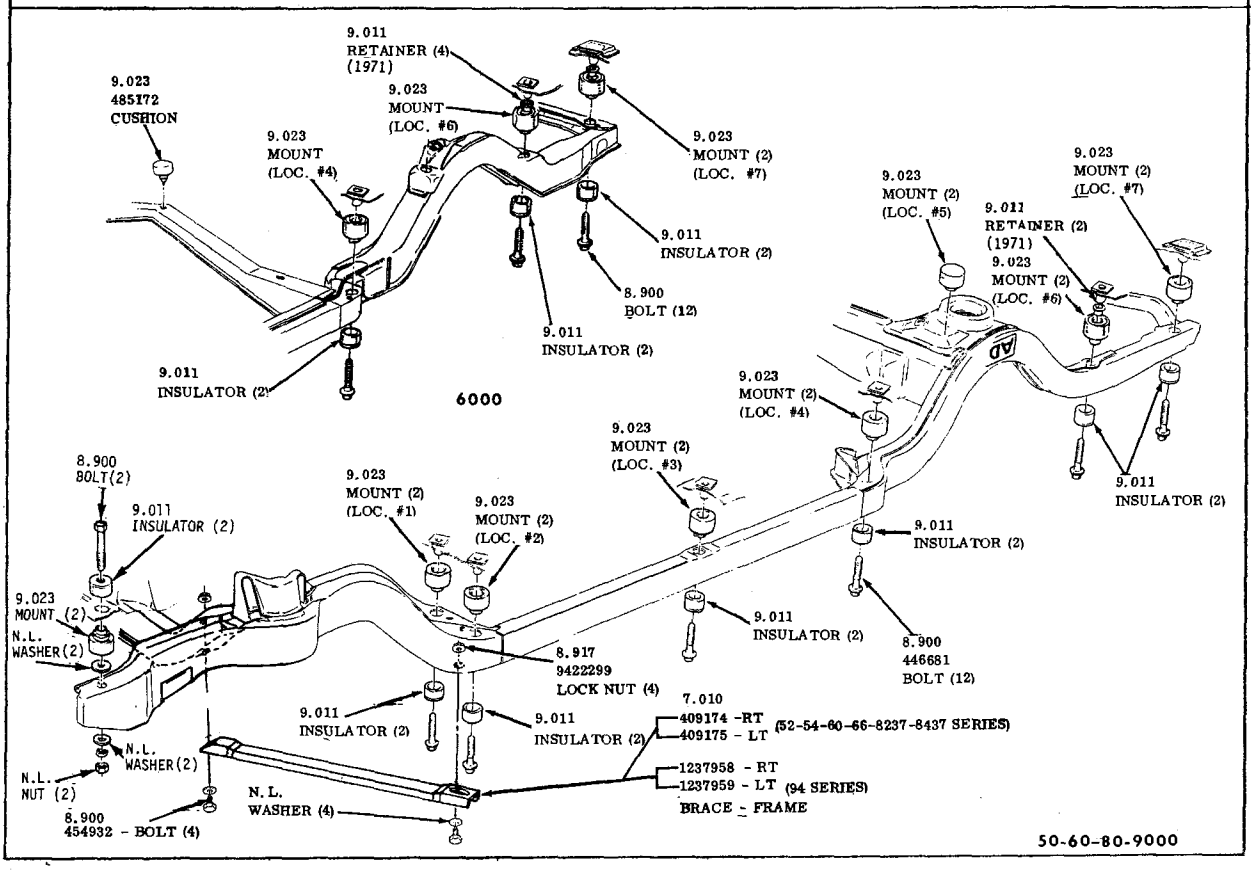

BODY MOUNTING

1971-1972 ALL

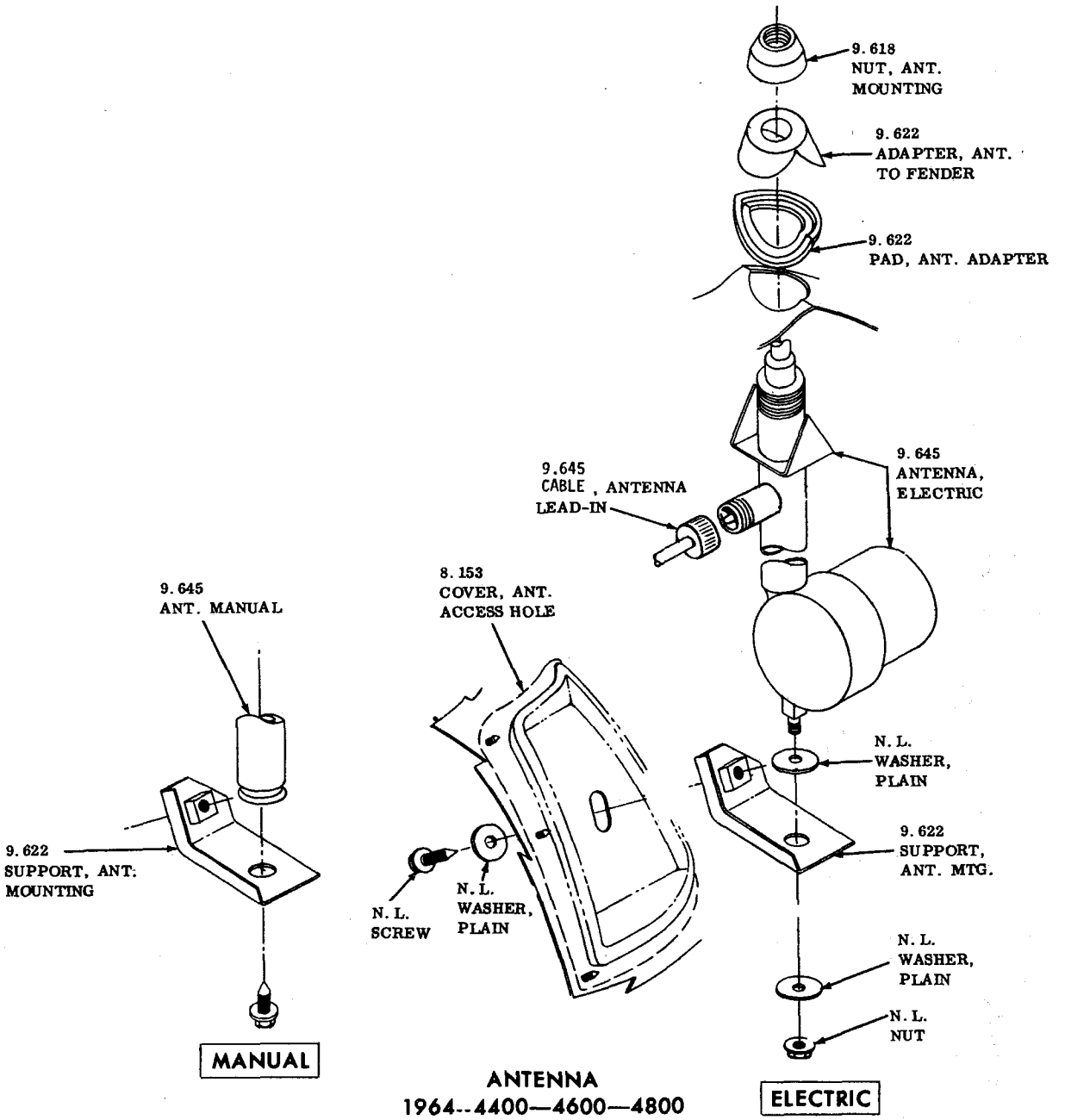

ANTENNA
1964--4400—4600—4800

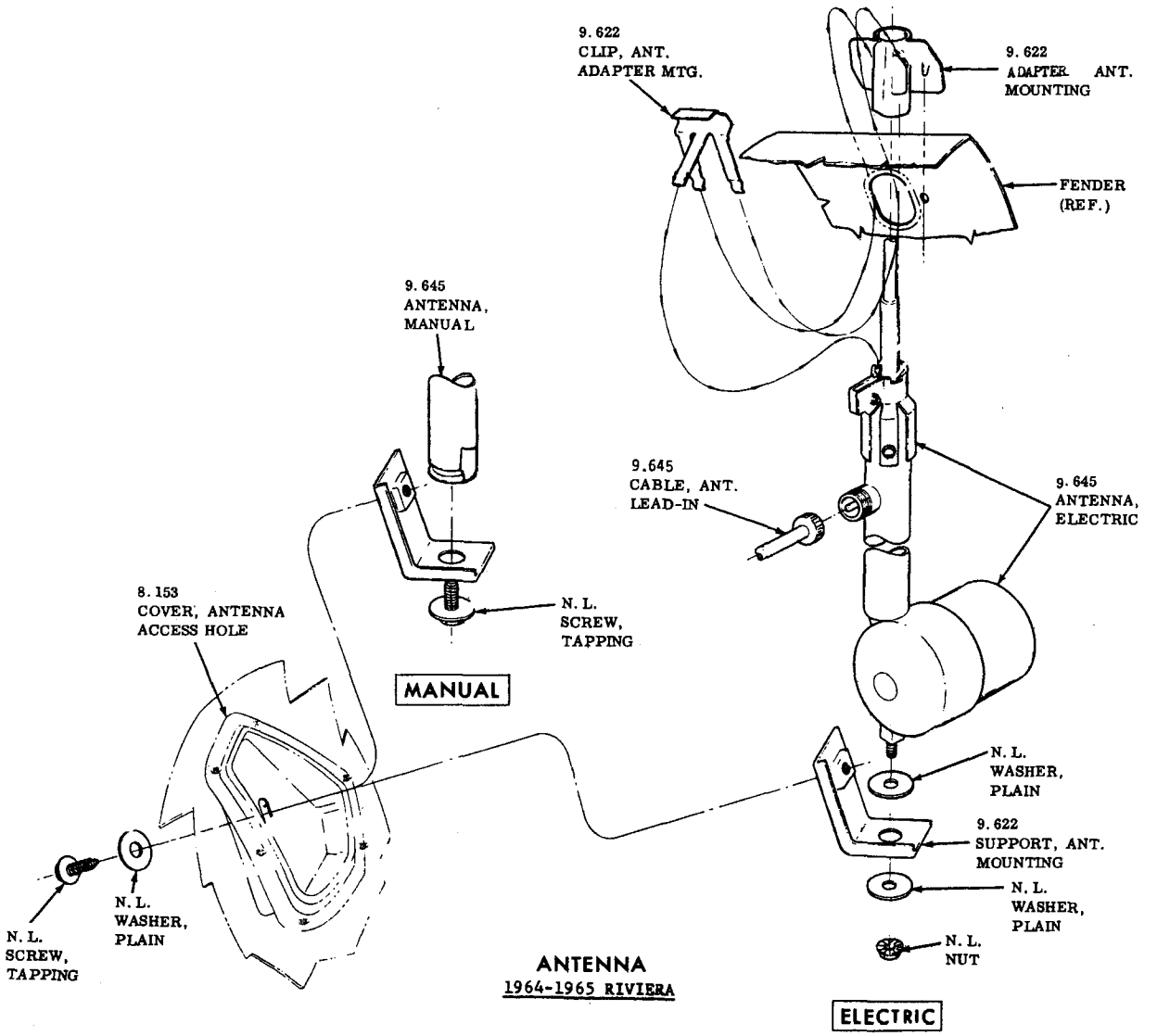

ANTENNA
1964-1965 RIVIERA

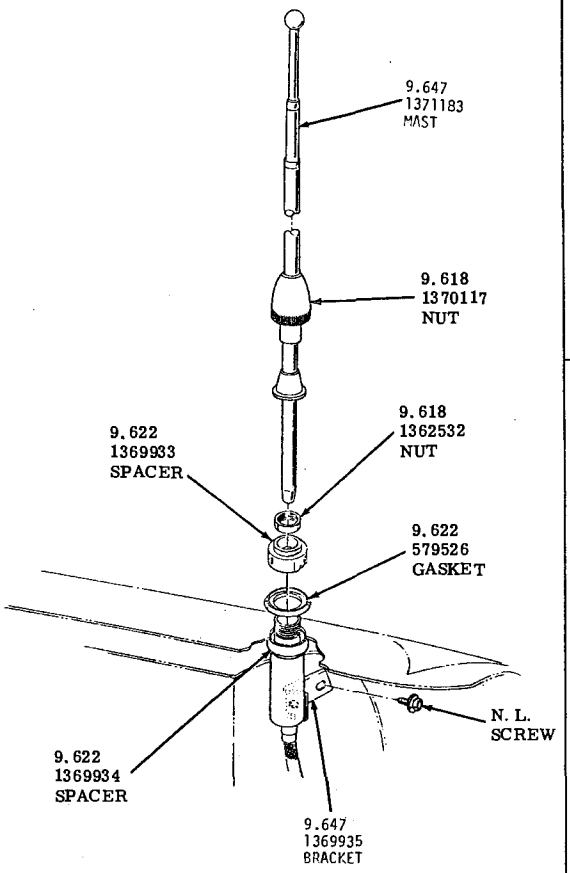

MANUAL ANTENNA

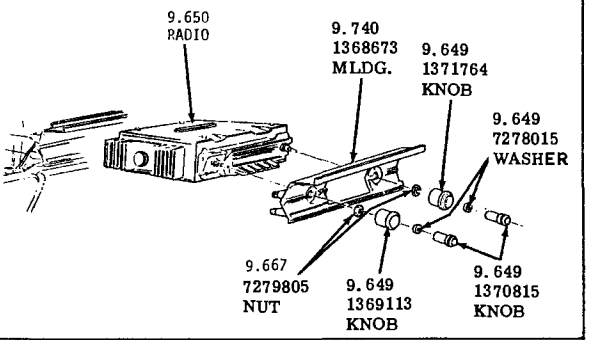

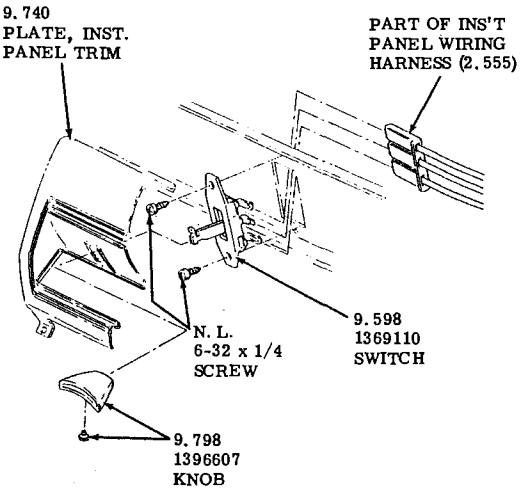

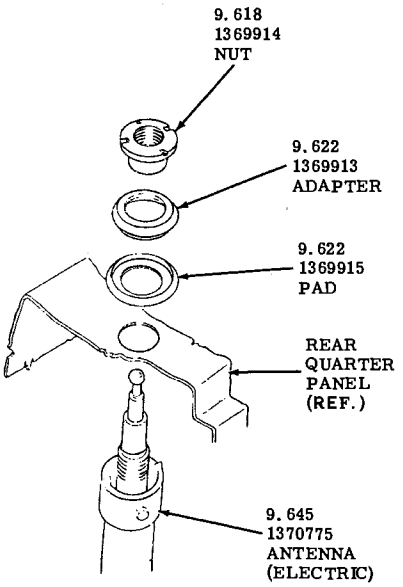

ELECTRIC ANTENNA

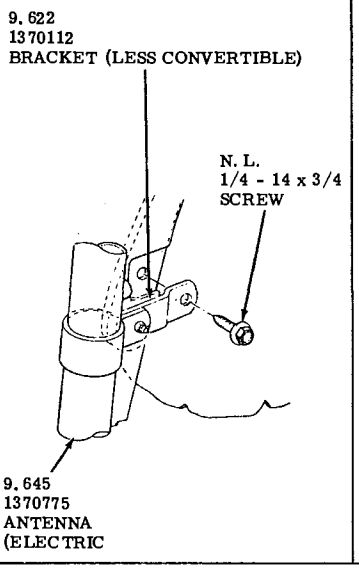

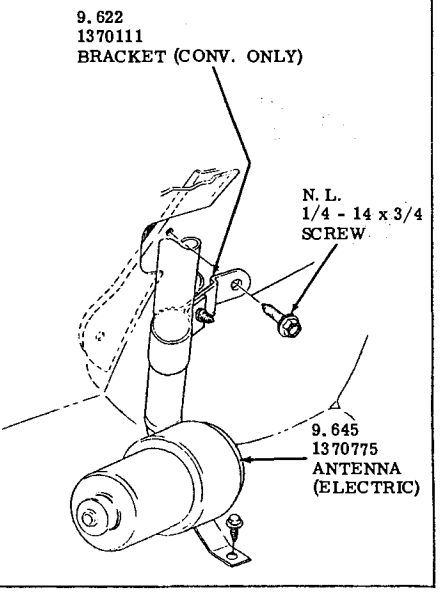

RADIO AND ANTENNA
1965-LESABRE-WILDCAT-ELECTRA 225

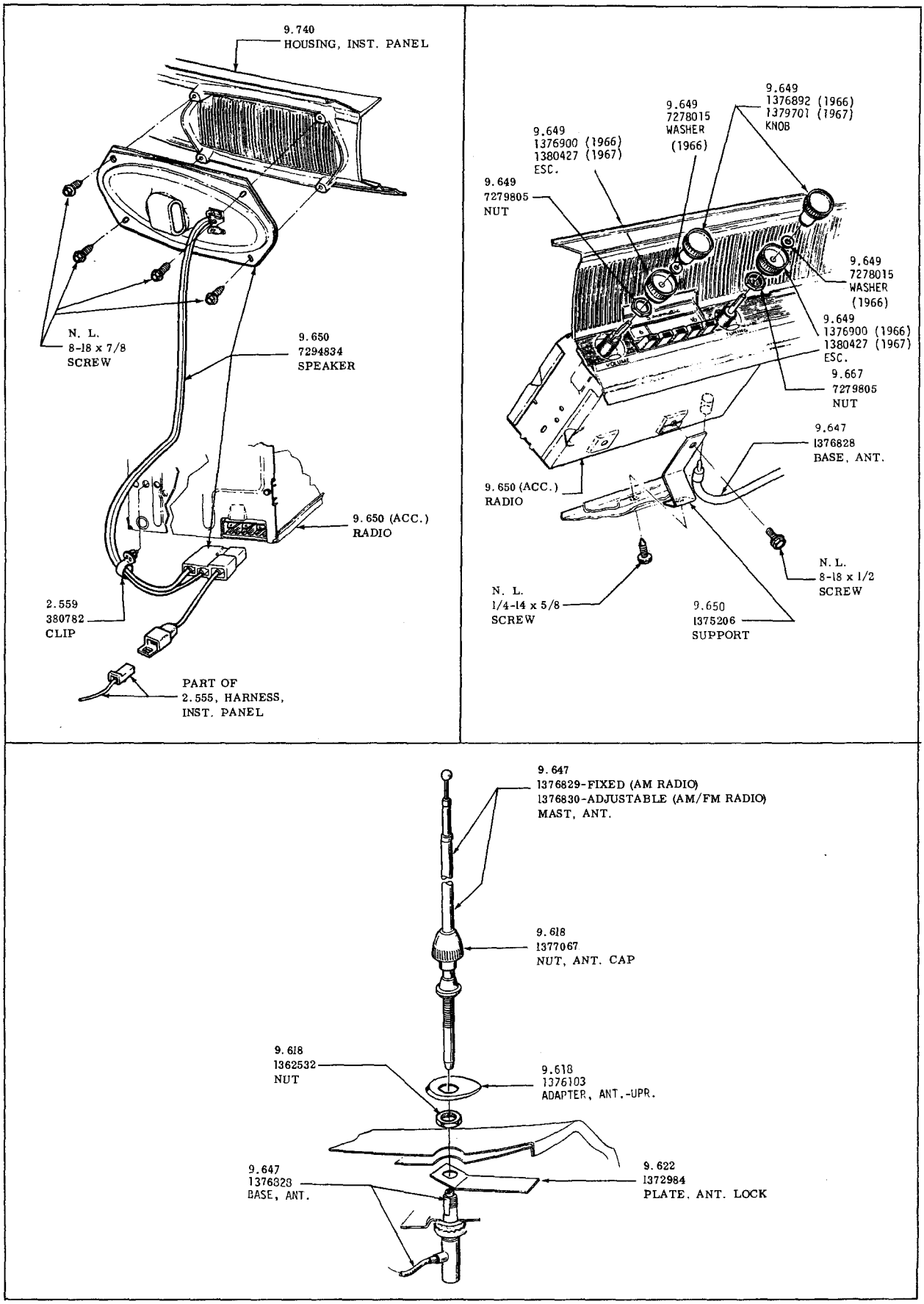

RADIO AND ANTENNA

1966-1967 -SPECIAL-SKYLARK-SKYLARK GRAN SPORT

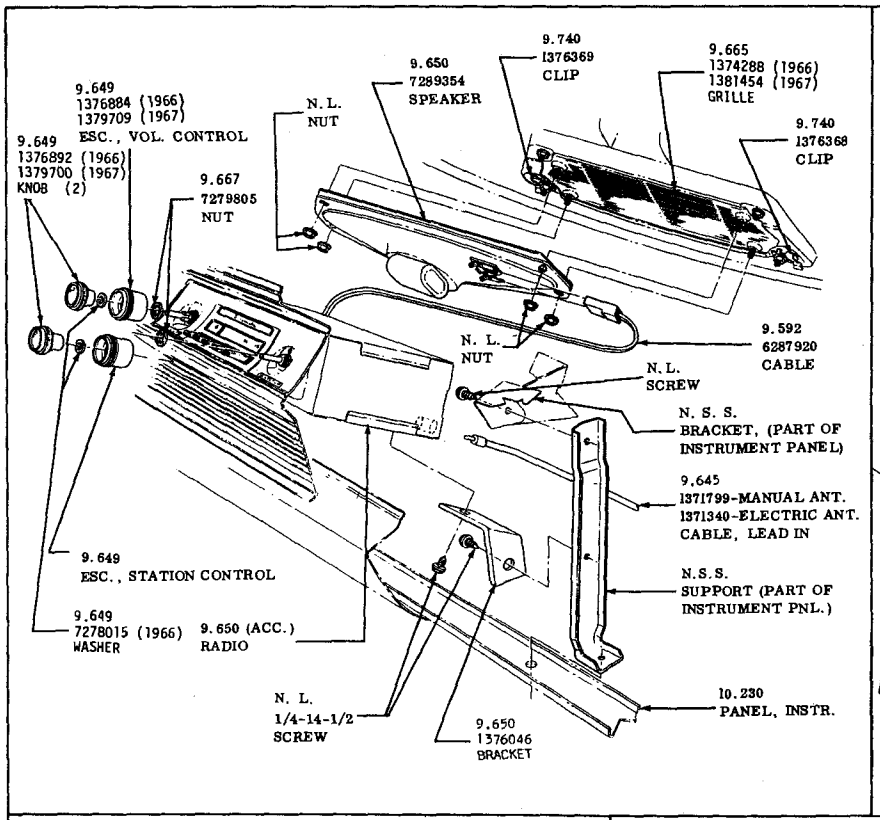

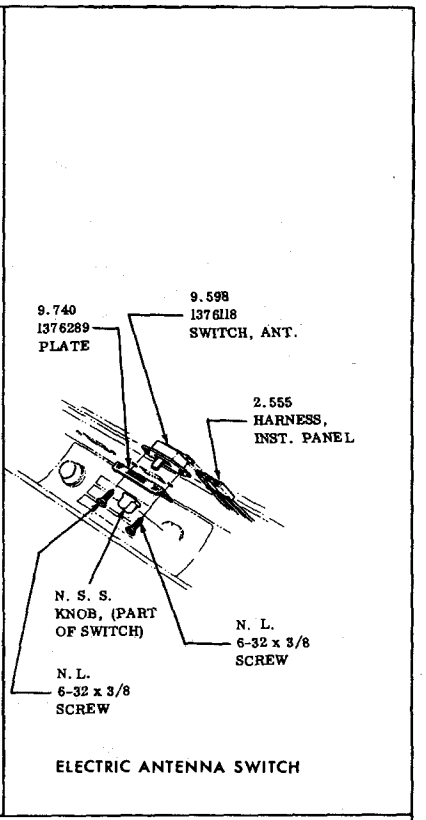

ELECTRIC ANTENNA SWITCH

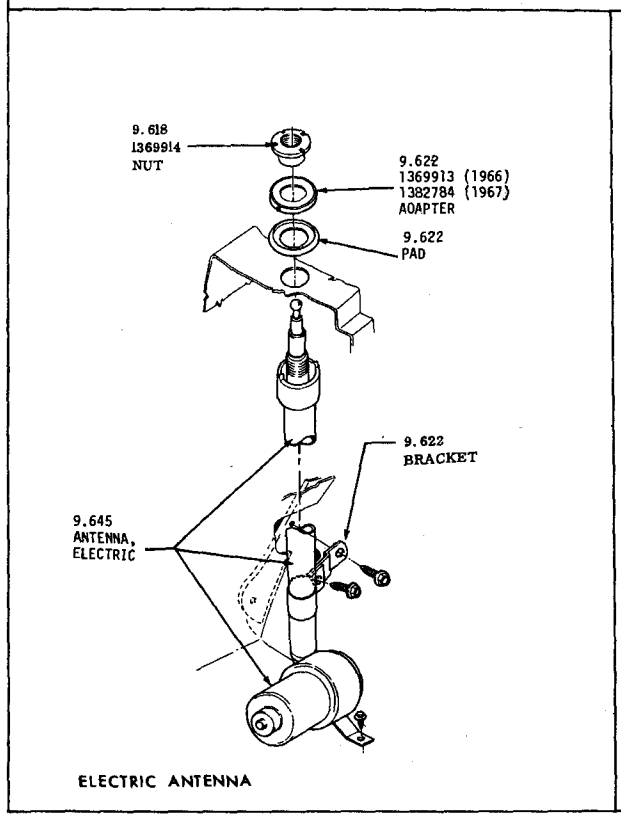

ELECTRIC ANTENNA

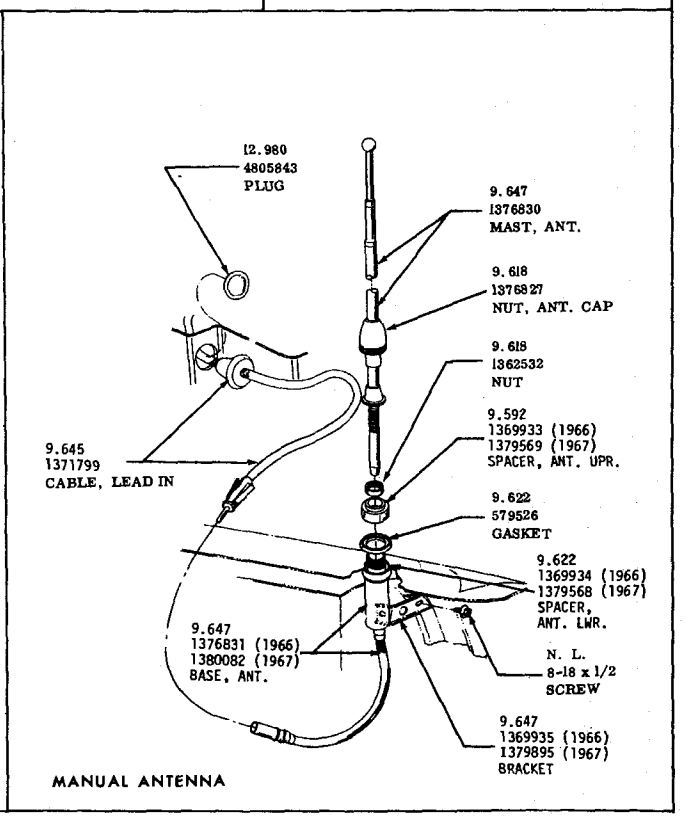

MANUAL ANTENNA

RADIO AND ANTENNA

1966-1967-LE SABRE-WILDCAT-ELECTRA 225

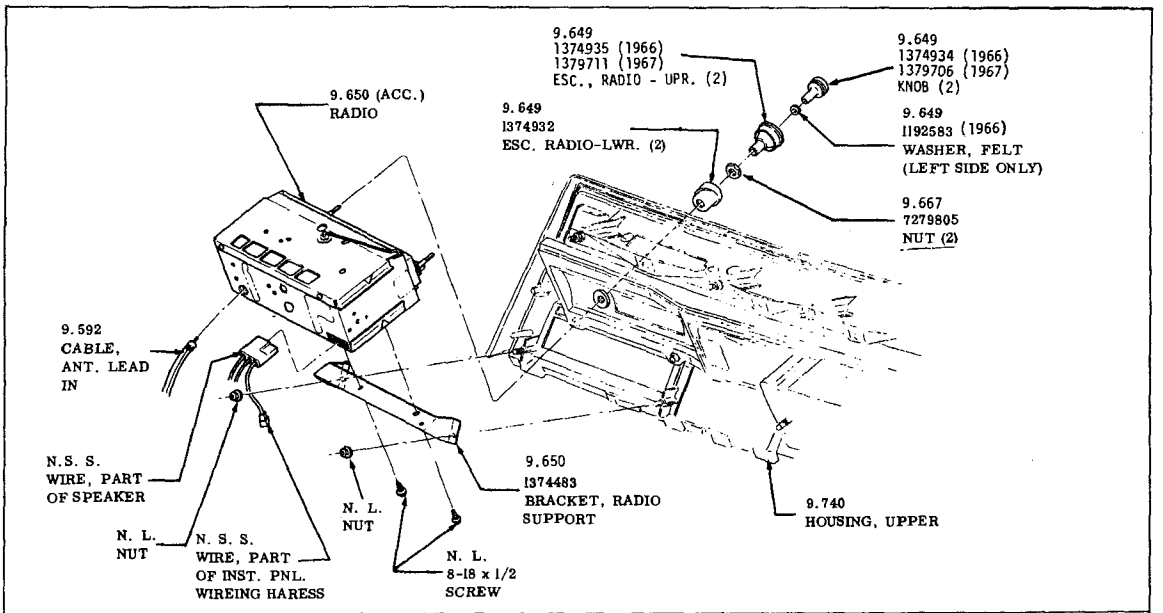

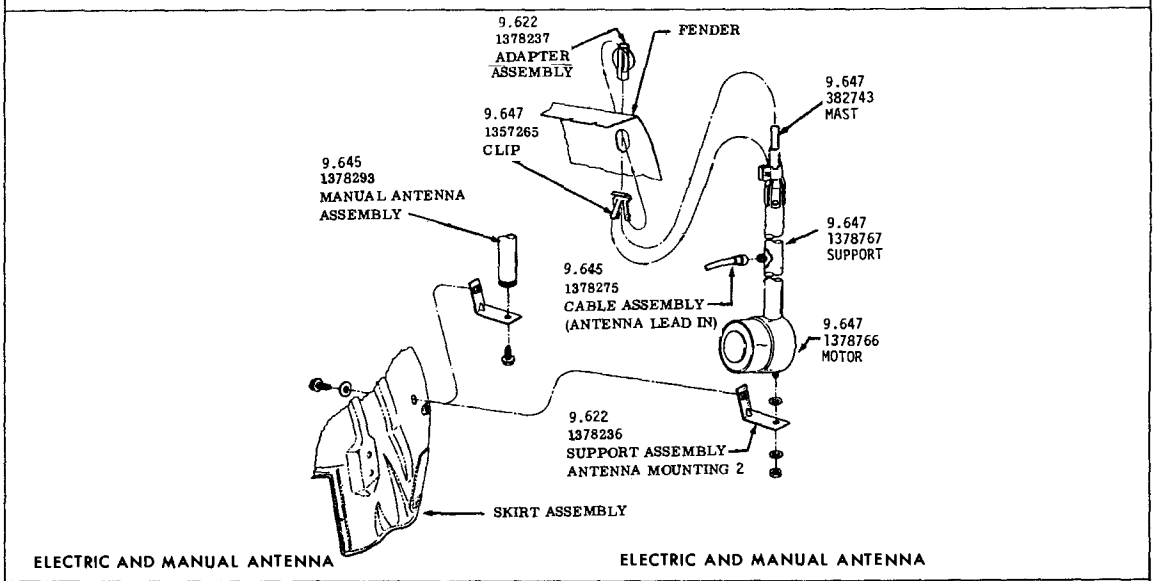

ELECTRIC AND MANUAL ANTENNA

ELECTRIC AND MANUAL ANTENNA

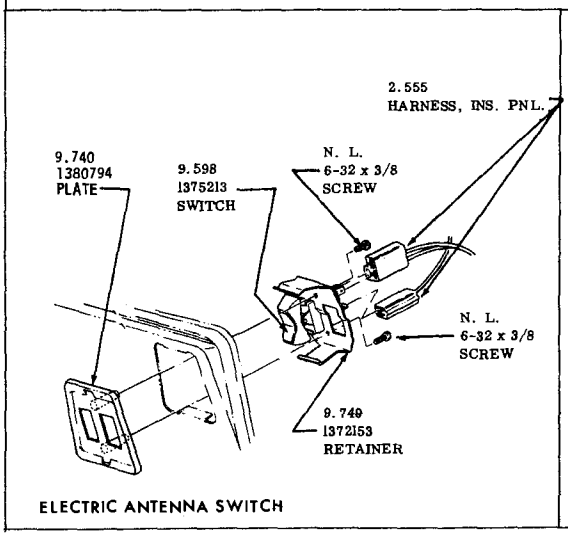

ELECTRIC ANTENNA SWITCH

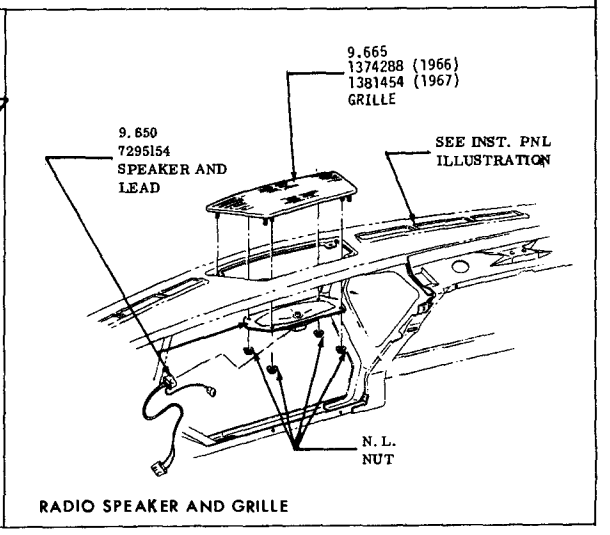

RADIO SPEAKER AND GRILLE

RADIO AND ANTENNA
1966-1967 —RIVIERA

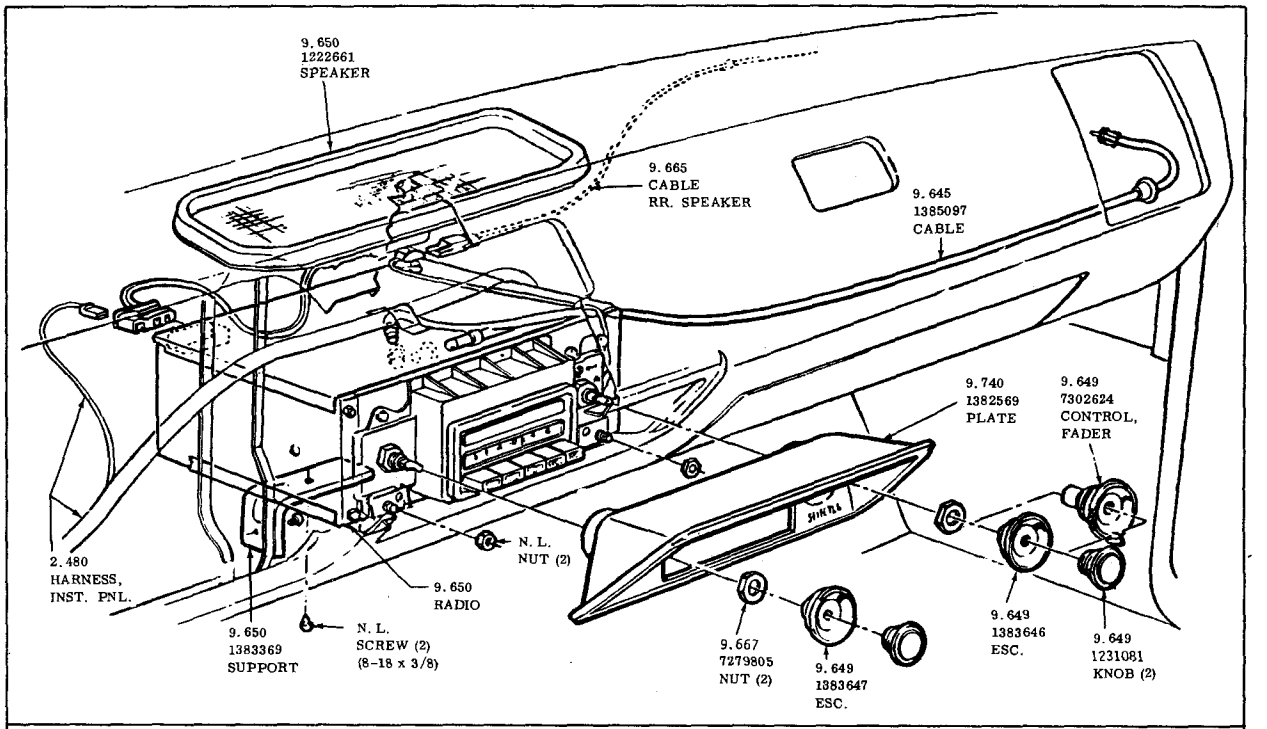

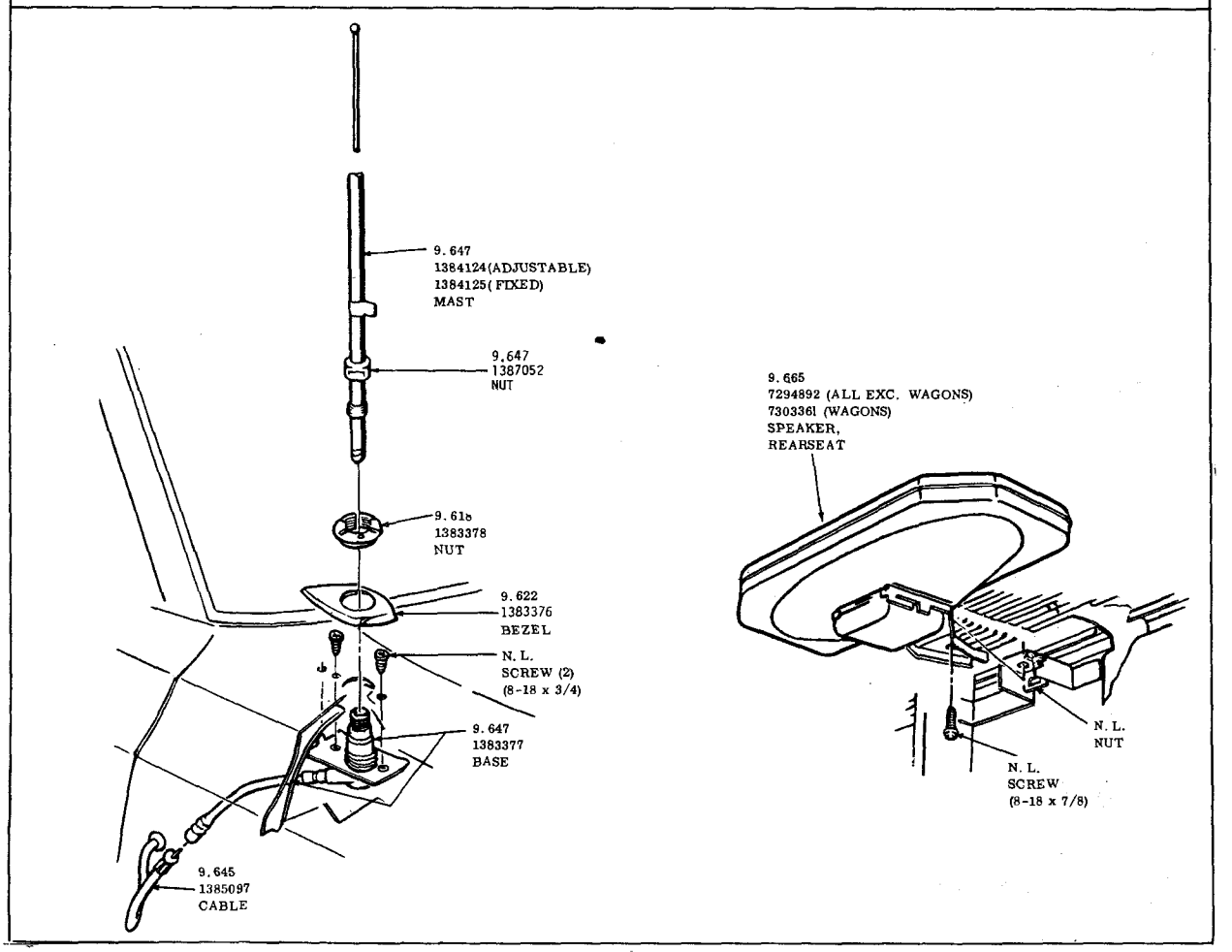

RADIO & ANTENNA
1968-1969 —30—4000

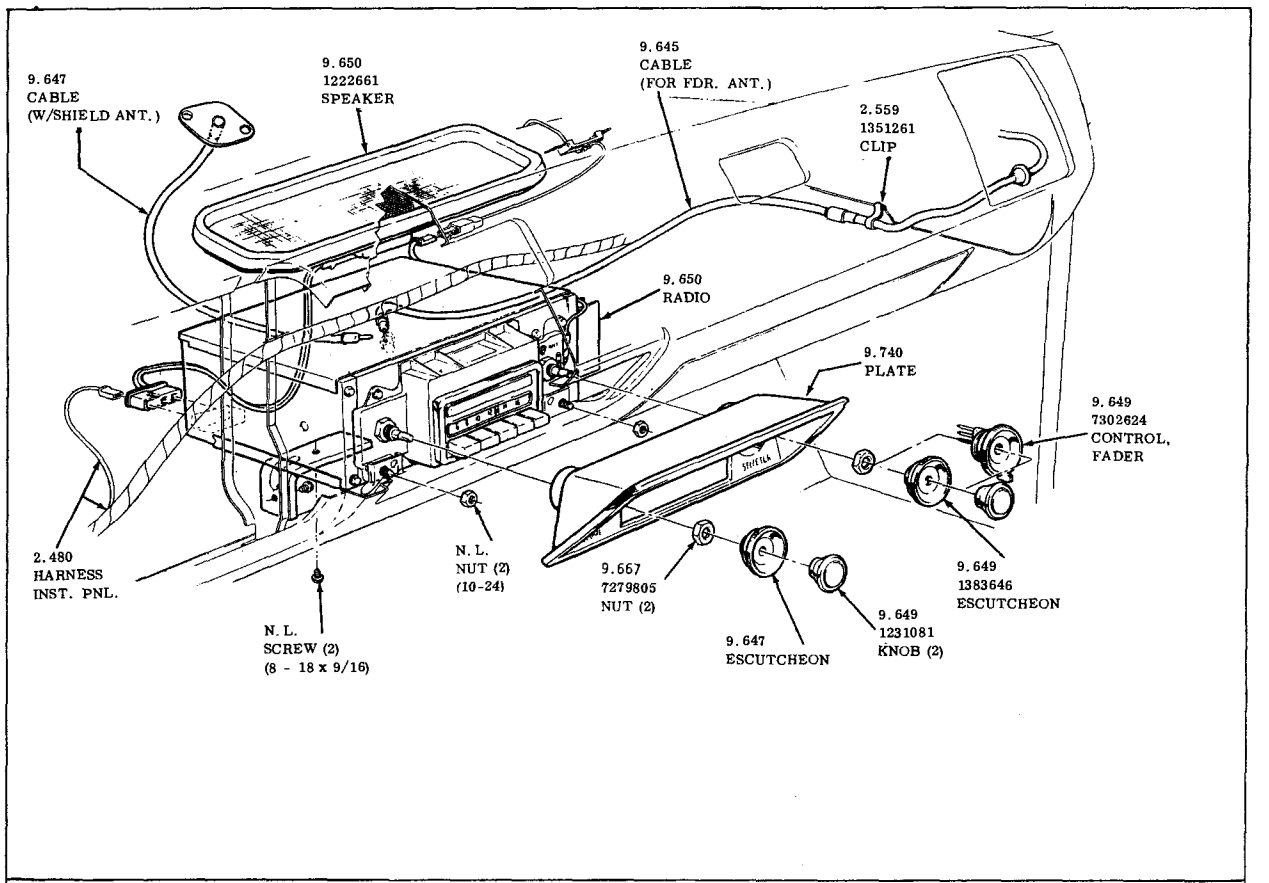

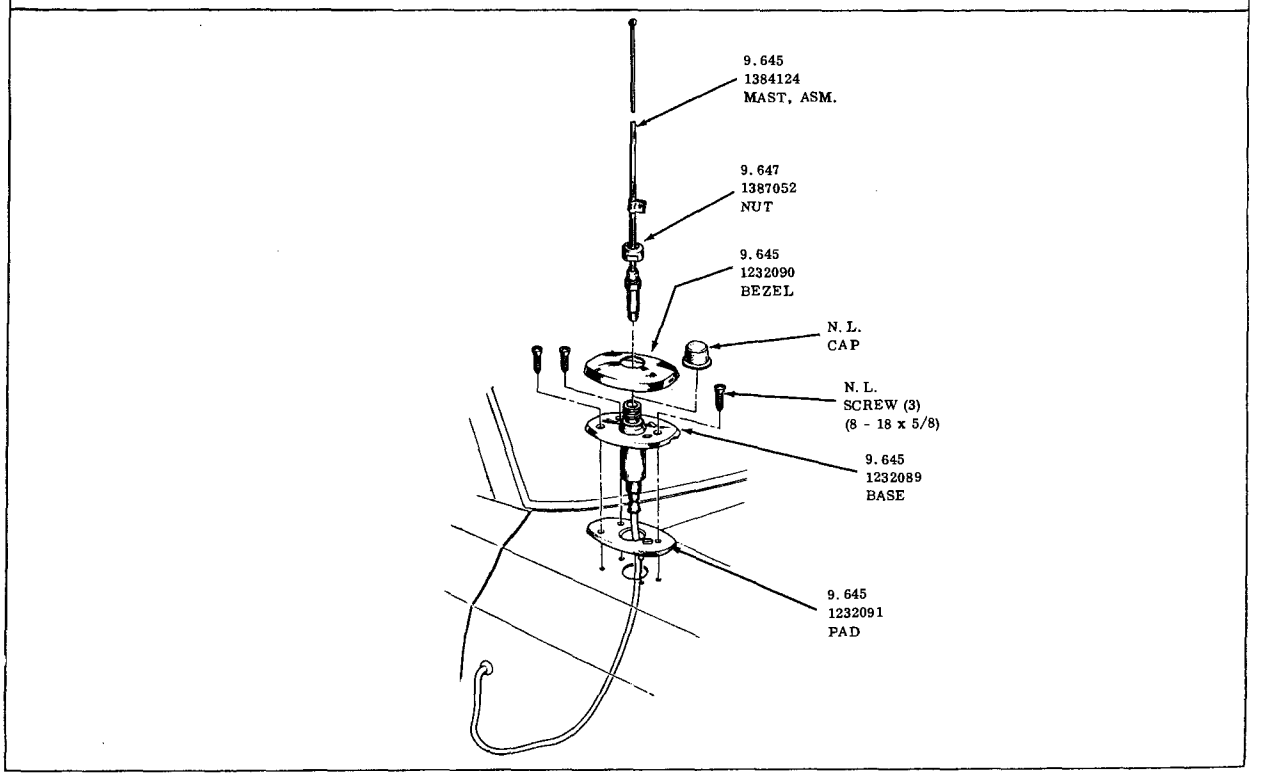

RADIO & ANTENNA
1970

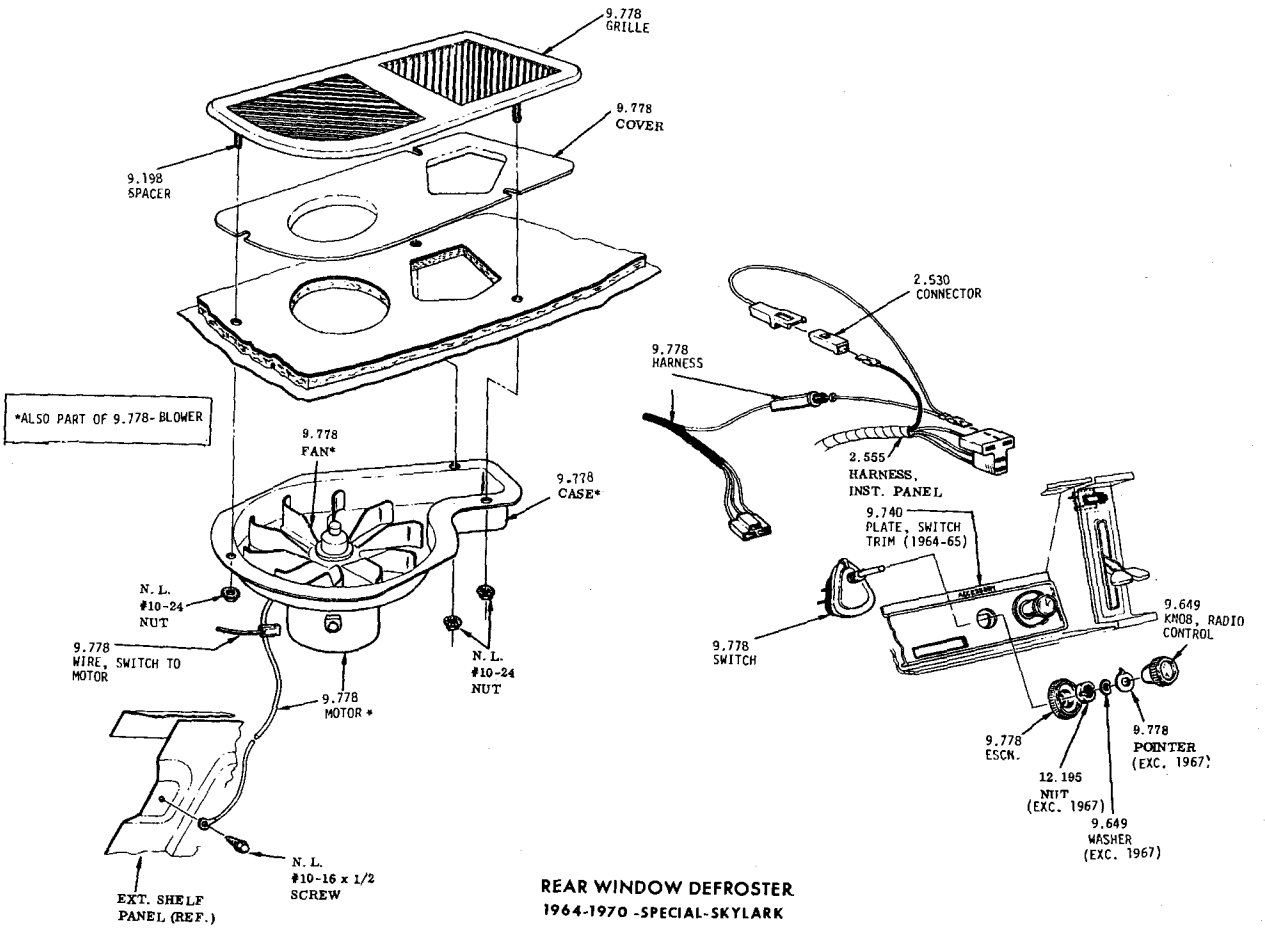

REAR WINDOW DEFROSTER
1964-1970 -SPECIAL-SKYLARK

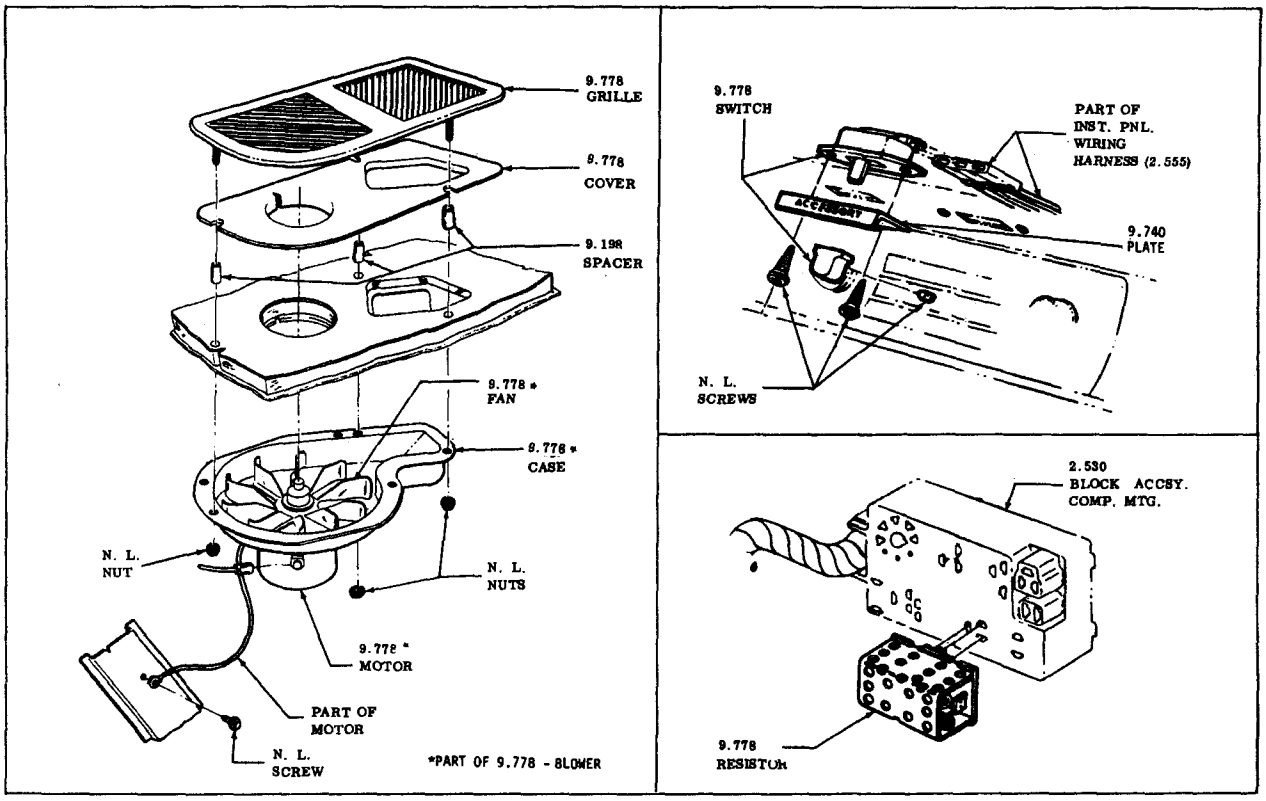

LE SABRE—WILDCAT—ELECTRA 225

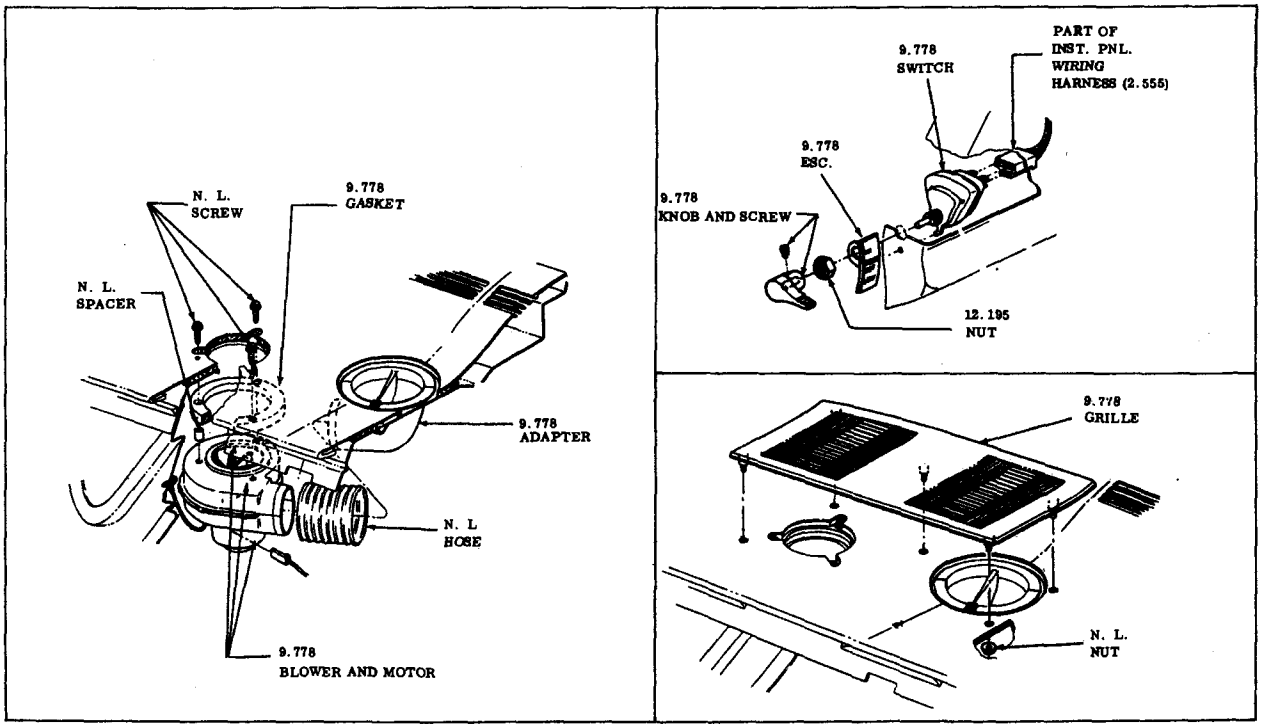

RIVIERA

REAR WINDOW DEFROSTER

1966-1970—LE SABRE—WILDCAT—ELECTRA 225—RIVIERA

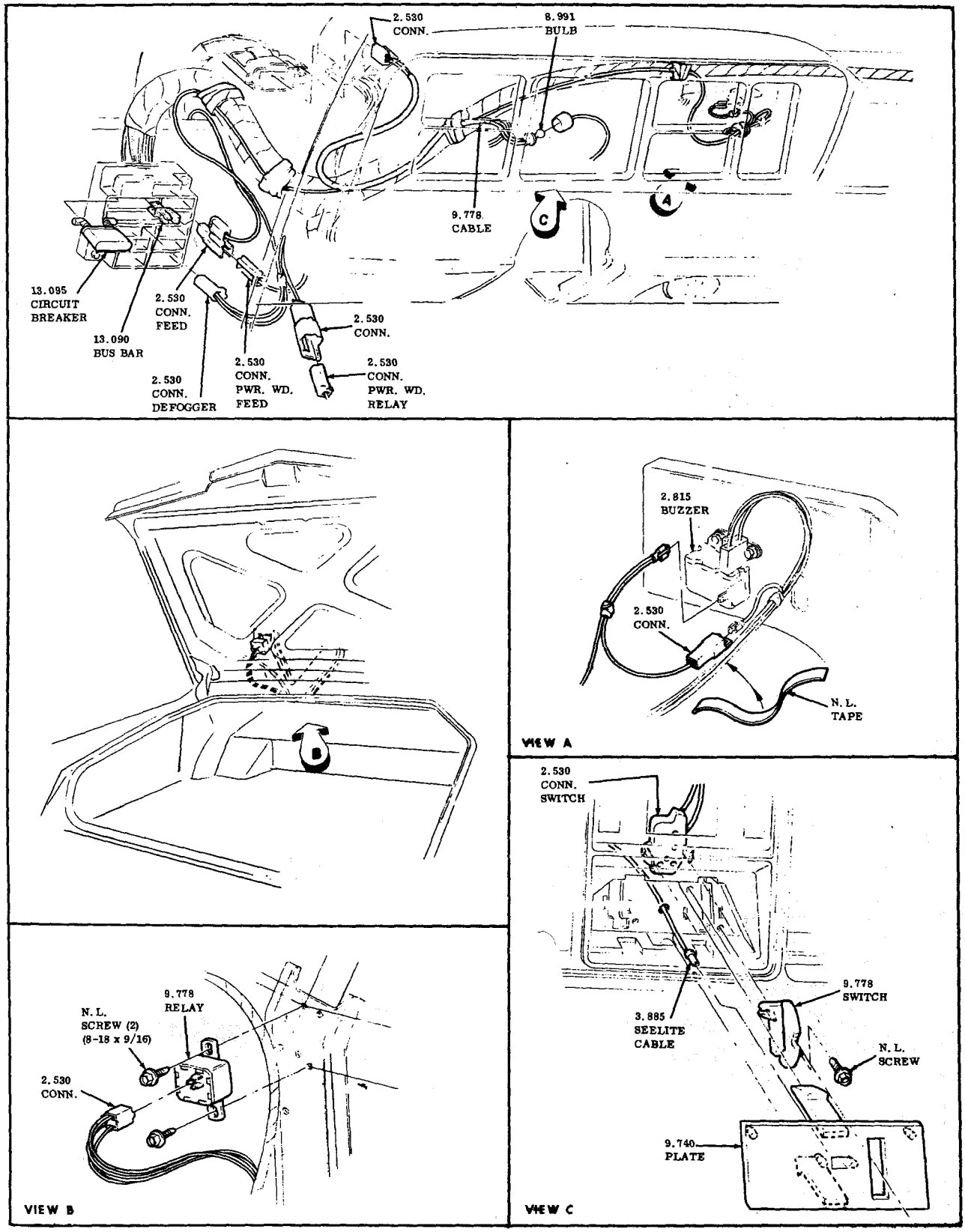

HEATED BACK GLASS DEFOGGER
1966-1970-9000

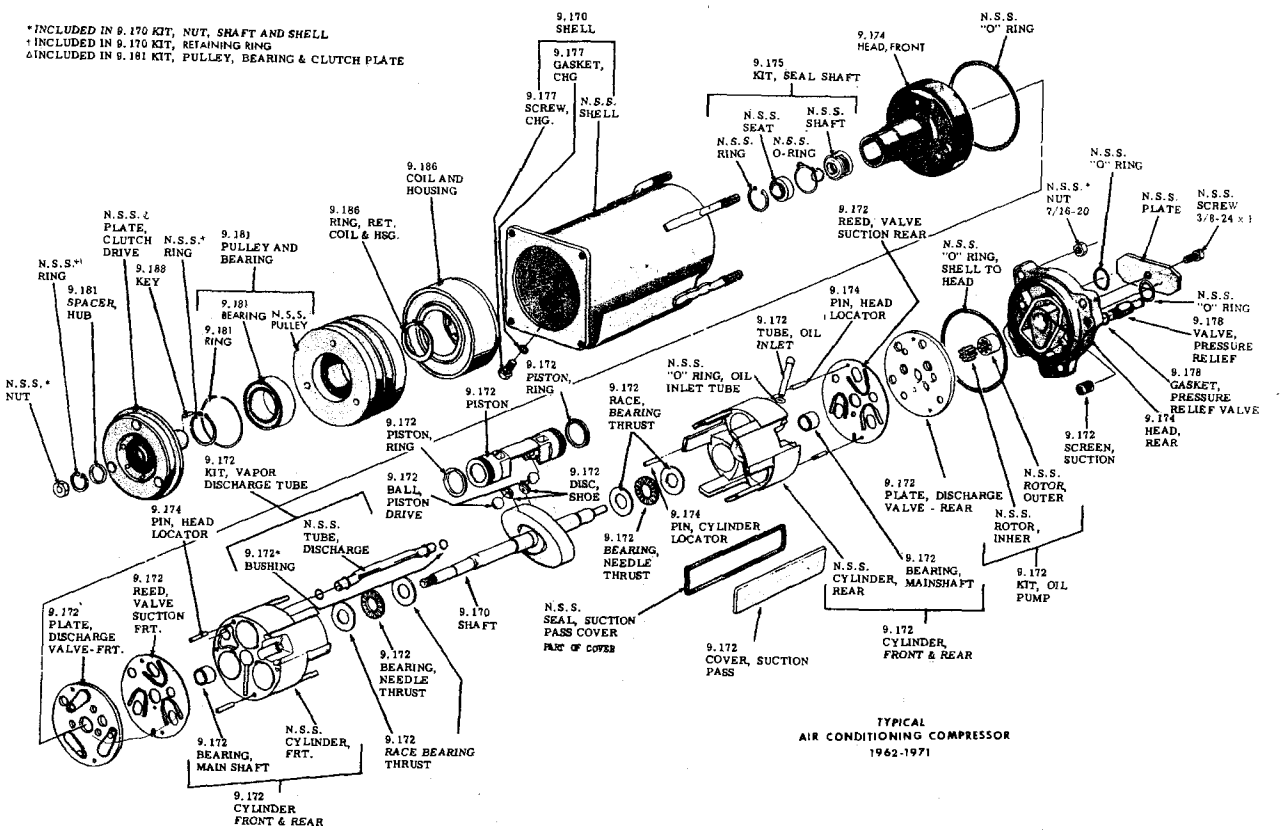
*INCLUDED IN 9.170 KIT, NUT, SHAFT AND SHELL
†INCLUDED IN 9.170 KIT, RETAINING RING
△INCLUDED IN 9.181 KIT, PULLEY, BEARING & CLUTCH PLATE
9.170 SHELL
9.177 GASKET, CHG
9.177 SCREW, CHG.
N.S.S. SHELL
9.174 HEAD, FRONT
N.S.S. "O" RING
9.175 KIT, SEAL SHAFT
N.S.S. SEAT
N.S.S. SHAFT
N.S.S. RING
N.S.S. O-RING
9.186 COIL AND HOUSING
9.186 RING, RET. COIL & HSG.
N.S.S. △ PLATE, CLUTCH DRIVE
N.S.S.* RING
9.181 PULLEY AND BEARING
N.S.S.† RING
9.188 KEY
9.181 SPACER, HUB
9.181 BEARING
N.S.S. PULLEY
9.181 RING
N.S.S.* NUT
9.172 KIT, VAPOR DISCHARGE TUBE
9.174 PIN, HEAD LOCATOR
9.172 PISTON, RING
9.172 PISTON
9.172 PISTON, RING
9.172 BALL, PISTON DRIVE
9.172 DISC, SHOE
9.172 RACE, BEARING THRUST
N.S.S. "O" RING, OIL INLET TUBE
9.172 TUBE, OIL INLET
9.174 PIN, HEAD LOCATOR
9.172 REED, VALVE SUCTION REAR
N.S.S. "O" RING, SHELL TO HEAD
N.S.S.* NUT 7/16-20
N.S.S. PLATE
N.S.S. SCREW 3/8-24 x 1
N.S.S. "O" RING
9.178 VALVE, PRESSURE RELIEF
9.178 GASKET, PRESSURE RELIEF VALVE
9.174 HEAD, REAR
9.172 SCREEN, SUCTION
N.S.S. ROTOR, OUTER
N.S.S. ROTOR, INNER
9.172 PLATE, DISCHARGE VALVE - REAR
9.172 KIT, OIL PUMP
9.174 PIN, CYLINDER LOCATOR
9.172 BEARING, NEEDLE THRUST
N.S.S. CYLINDER, REAR
9.172 BEARING, MAINSHAFT
9.172 CYLINDER, FRONT & REAR
N.S.S. SEAL, SUCTION PASS COVER
PART OF COVER
9.172 COVER, SUCTION PASS
9.172* BUSHING
N.S.S. TUBE, DISCHARGE
9.170 SHAFT
9.172 REED, VALVE SUCTION FRT.
9.172* PLATE, DISCHARGE VALVE-FRT.
9.172 BEARING, NEEDLE THRUST
N.S.S. CYLINDER, FRT.
9.172 BEARING, MAIN SHAFT
9.172 RACE BEARING THRUST
9.172 CYLINDER FRONT & REAR
TYPICAL
AIR CONDITIONING COMPRESSOR
1962-1971

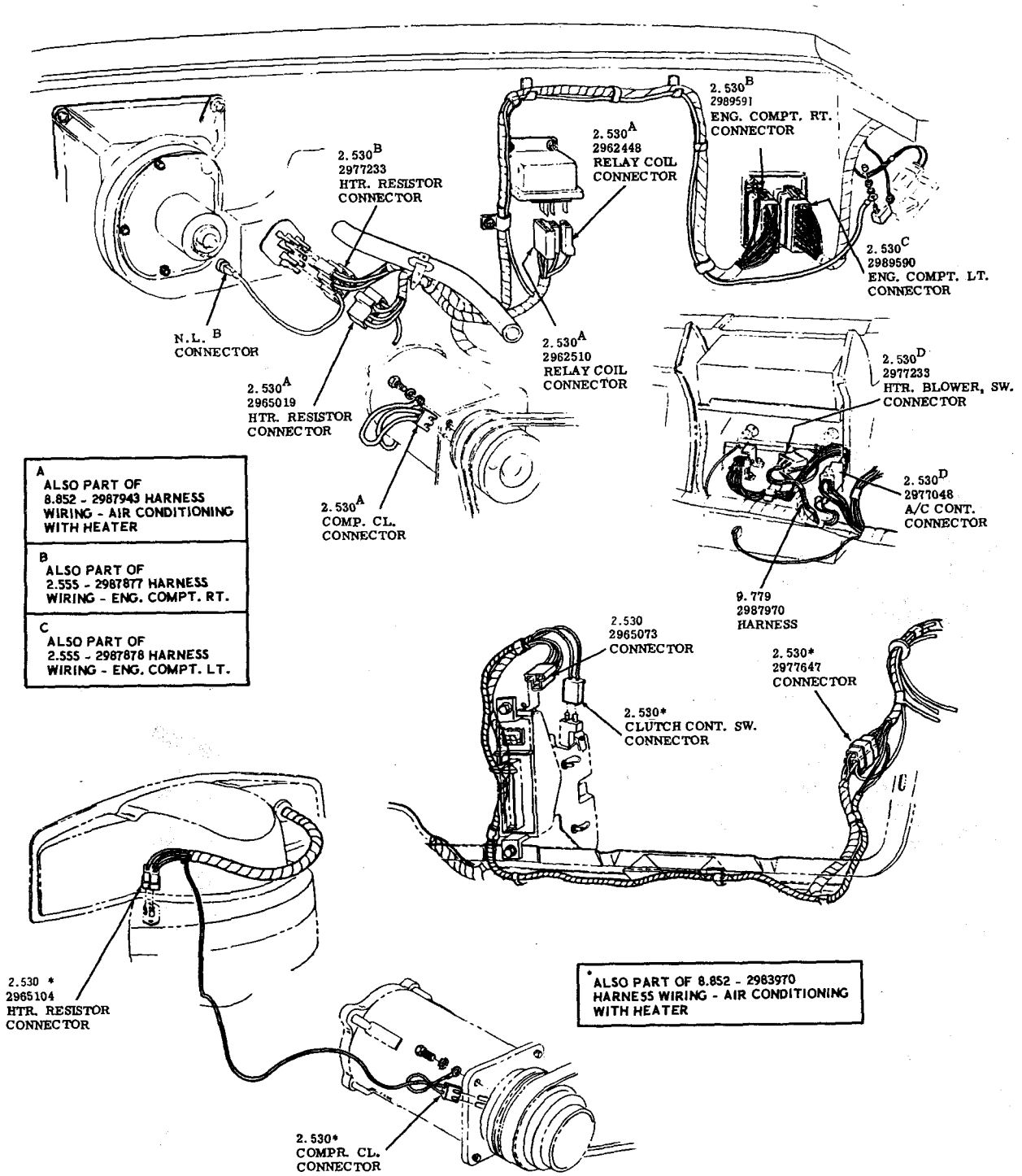

A ALSO PART OF 8.852 - 2987943 HARNESS WIRING - AIR CONDITIONING WITH HEATER
B ALSO PART OF 2.555 - 2987877 HARNESS WIRING - ENG. COMPT. RT.
C ALSO PART OF 2.555 - 2987878 HARNESS WIRING - ENG. COMPT. LT.

*ALSO PART OF 8.852 - 2983970
HARNESS WIRING - AIR CONDITIONING
WITH HEATER

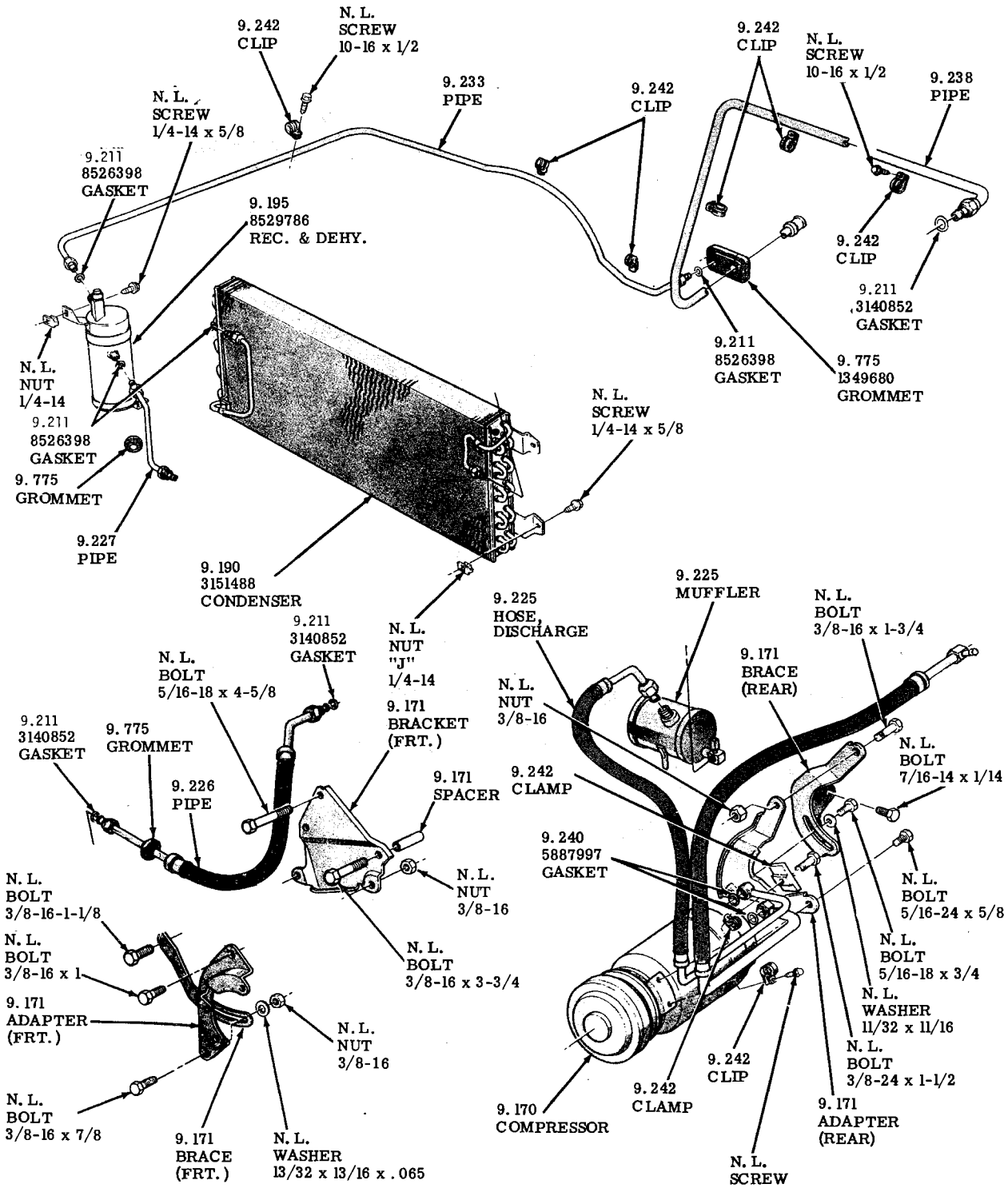

AIR CONDITIONING UNIT - 1961 - 40 - 41 - 4300 2ND TYPE - 1962

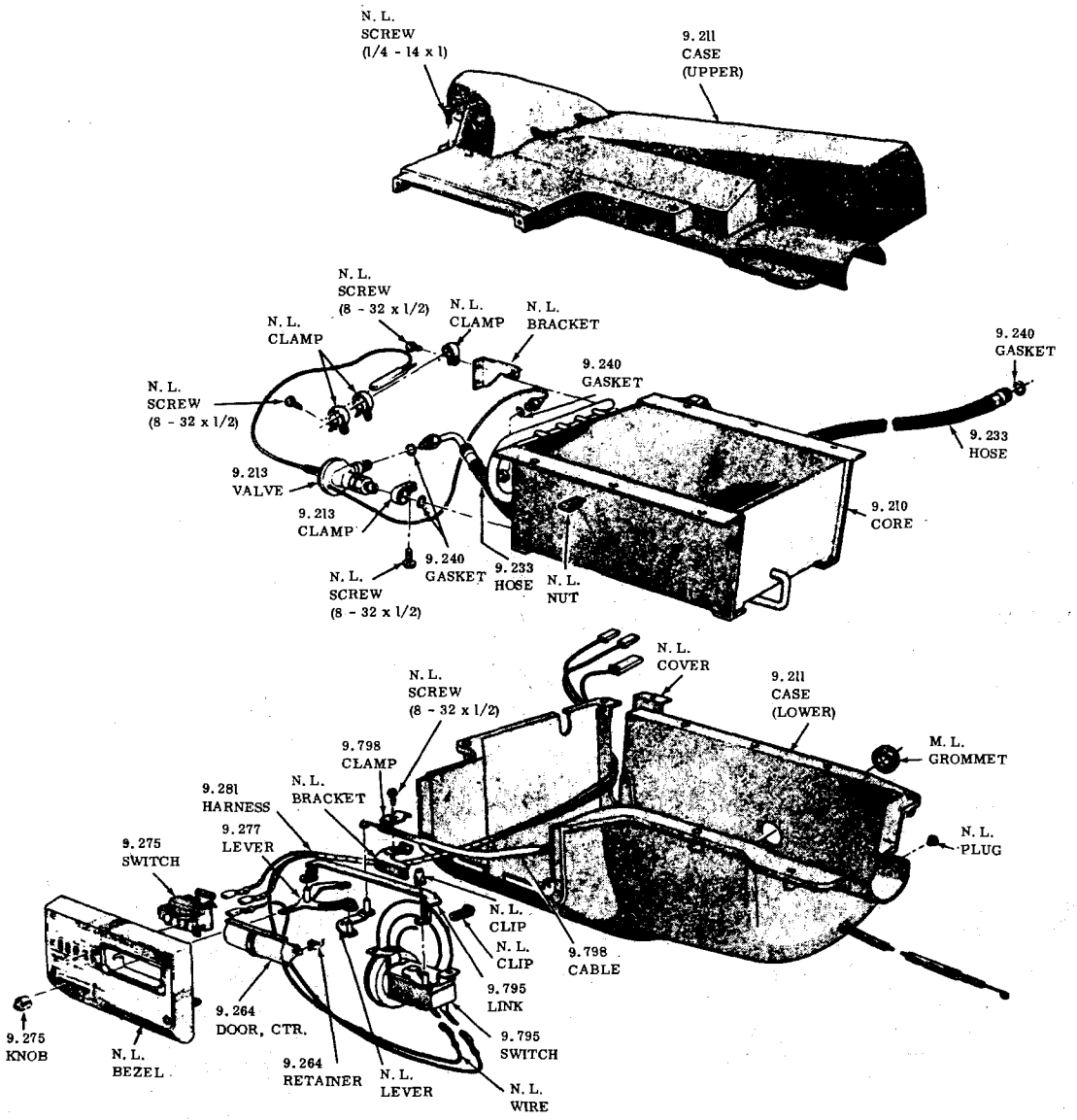

AIR CONDITIONING EVAPORATOR
1961–4000–4100–4300 2nd TYPE - 1962

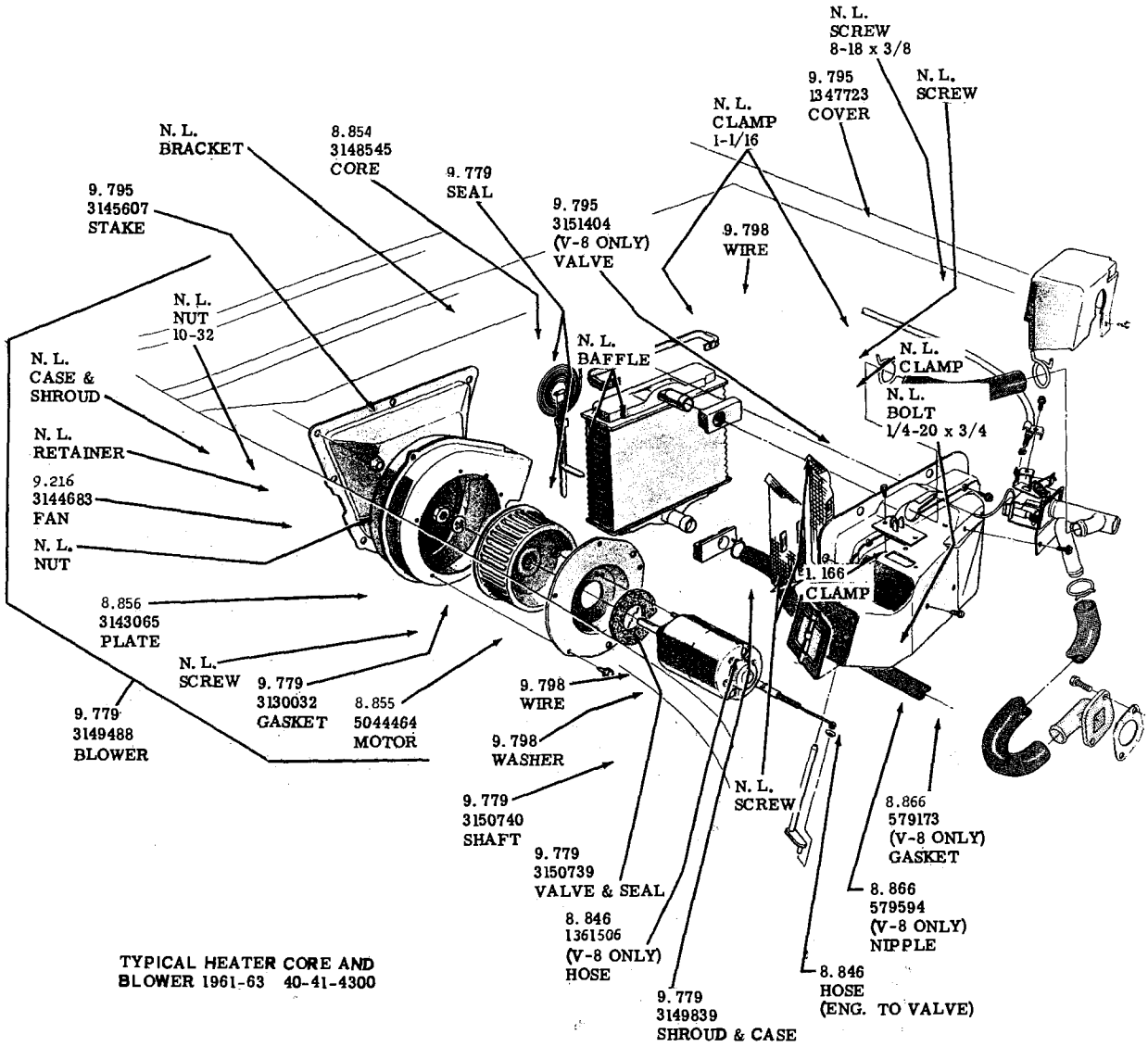

TYPICAL HEATER CORE AND BLOWER 1961-63 40-41-4300

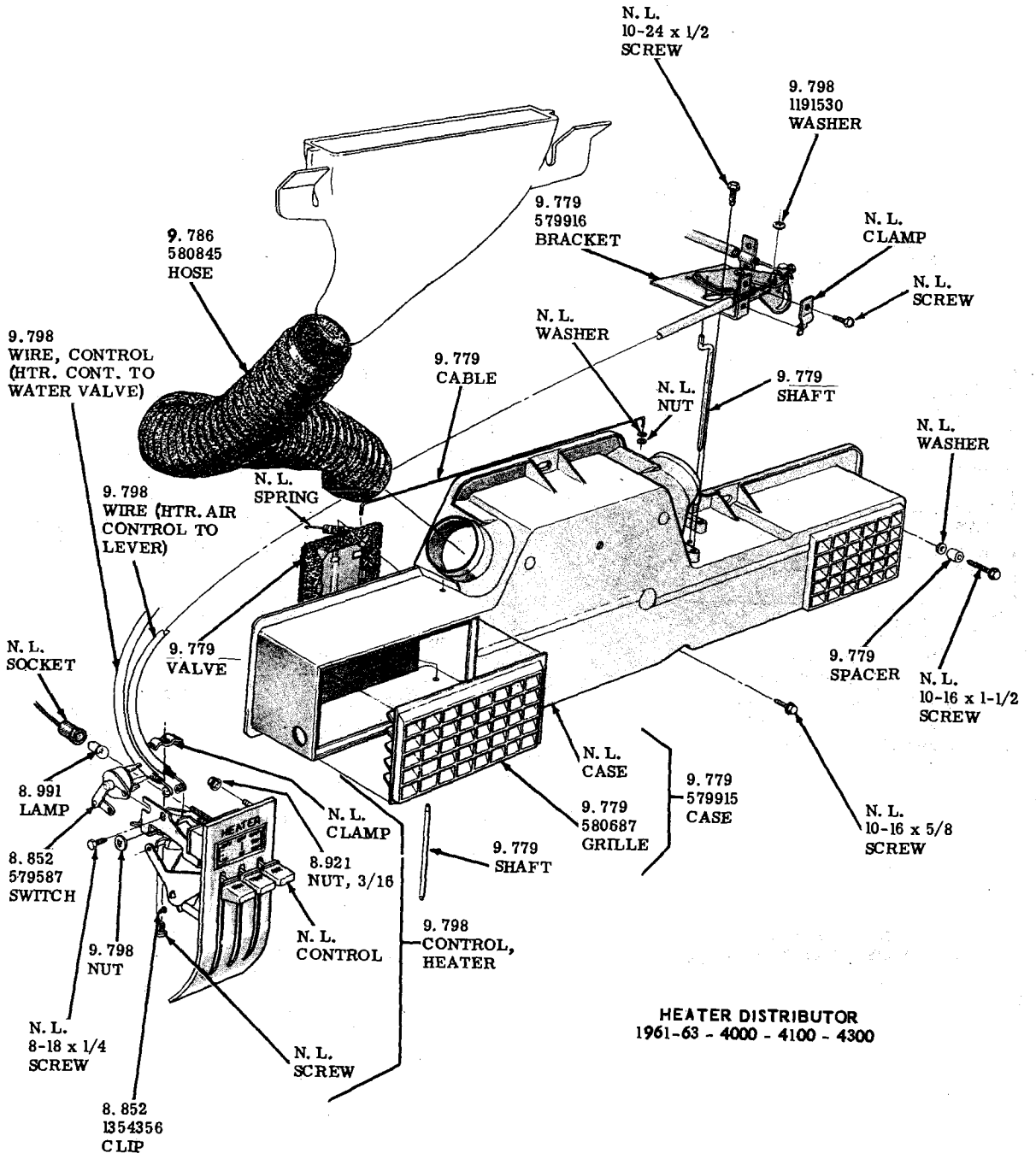

HEATER DISTRIBUTOR
1961-63 - 4000 - 4100 - 4300

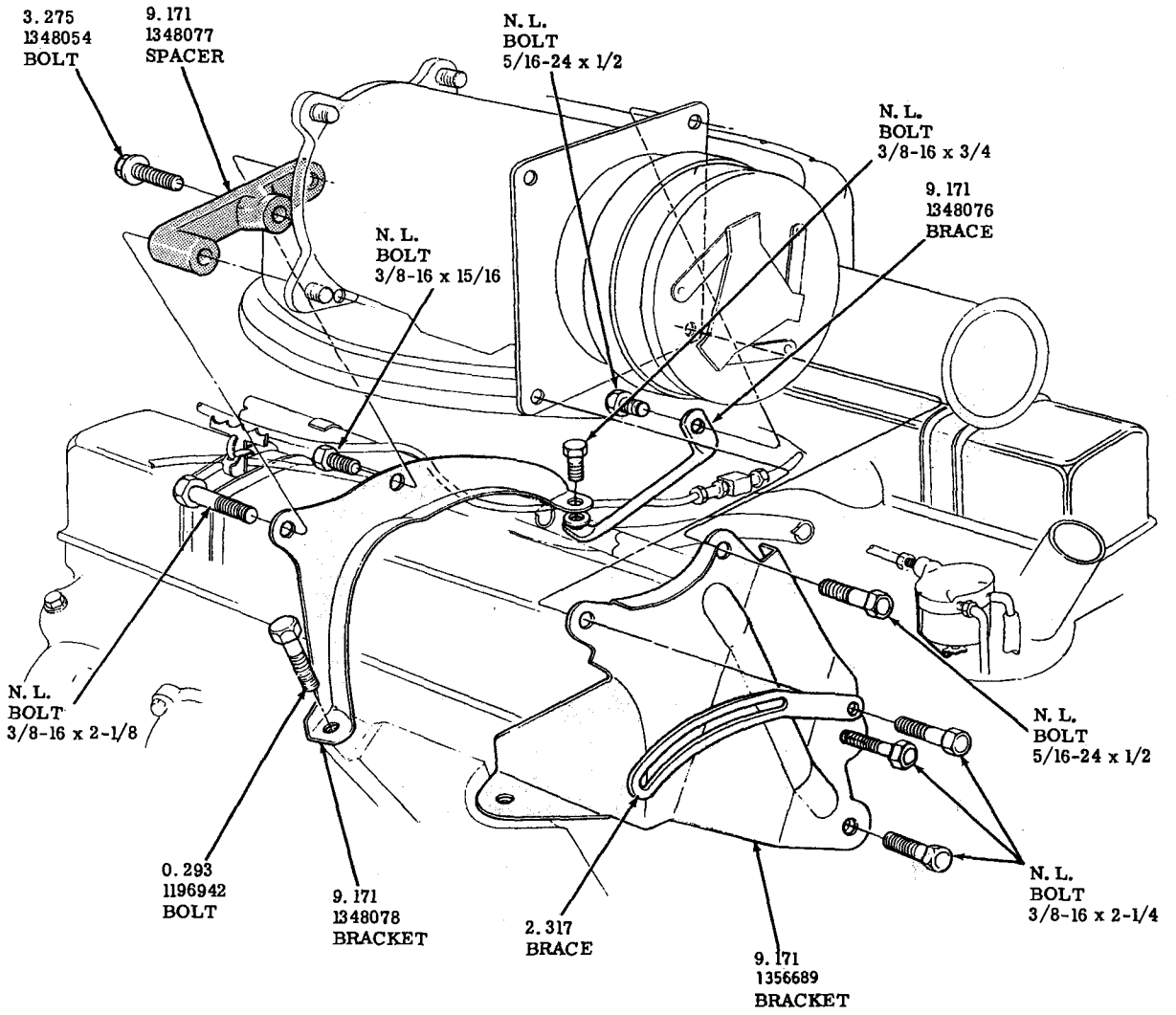

COMPRESSOR ATTACHING PARTS
1962 - 44 - 46 - 4800

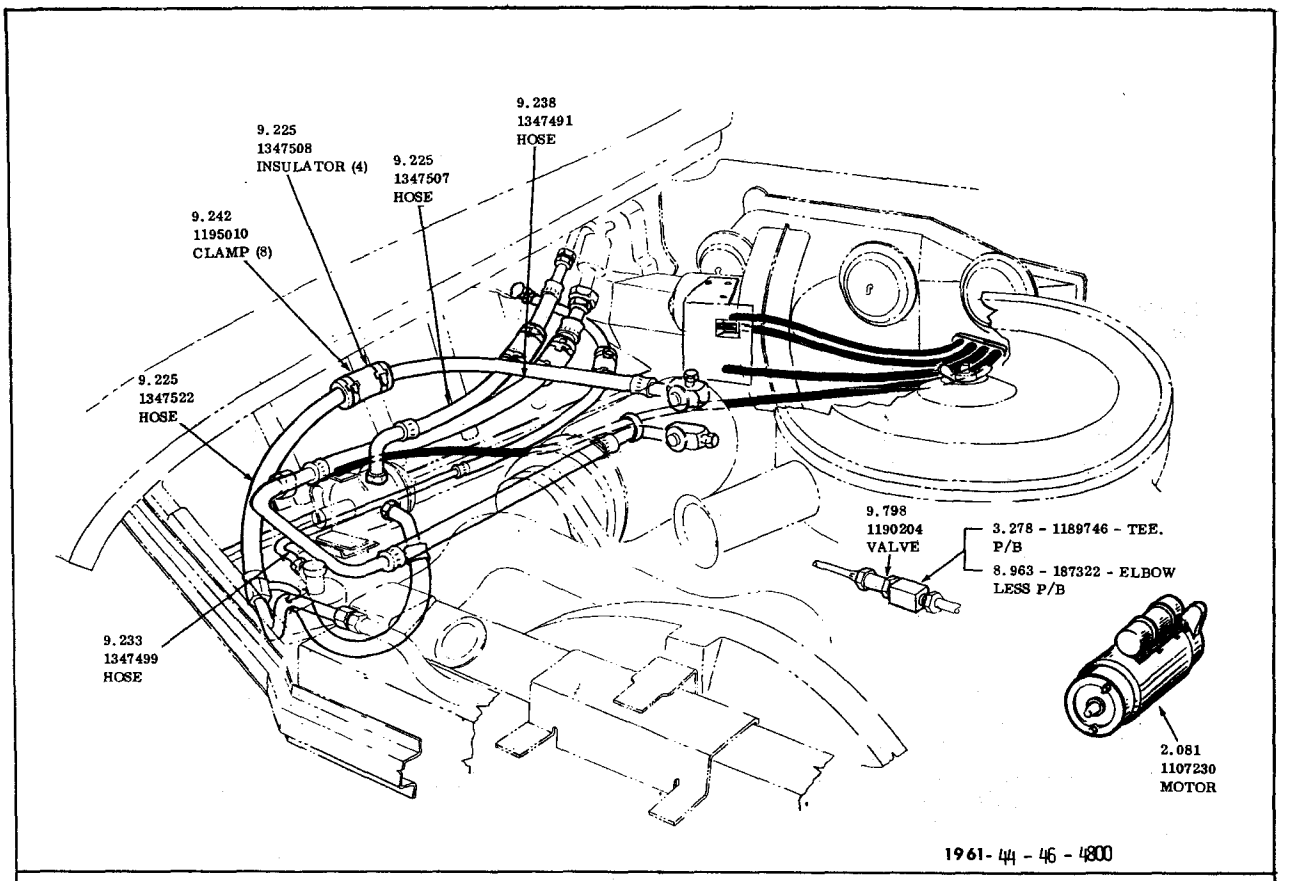

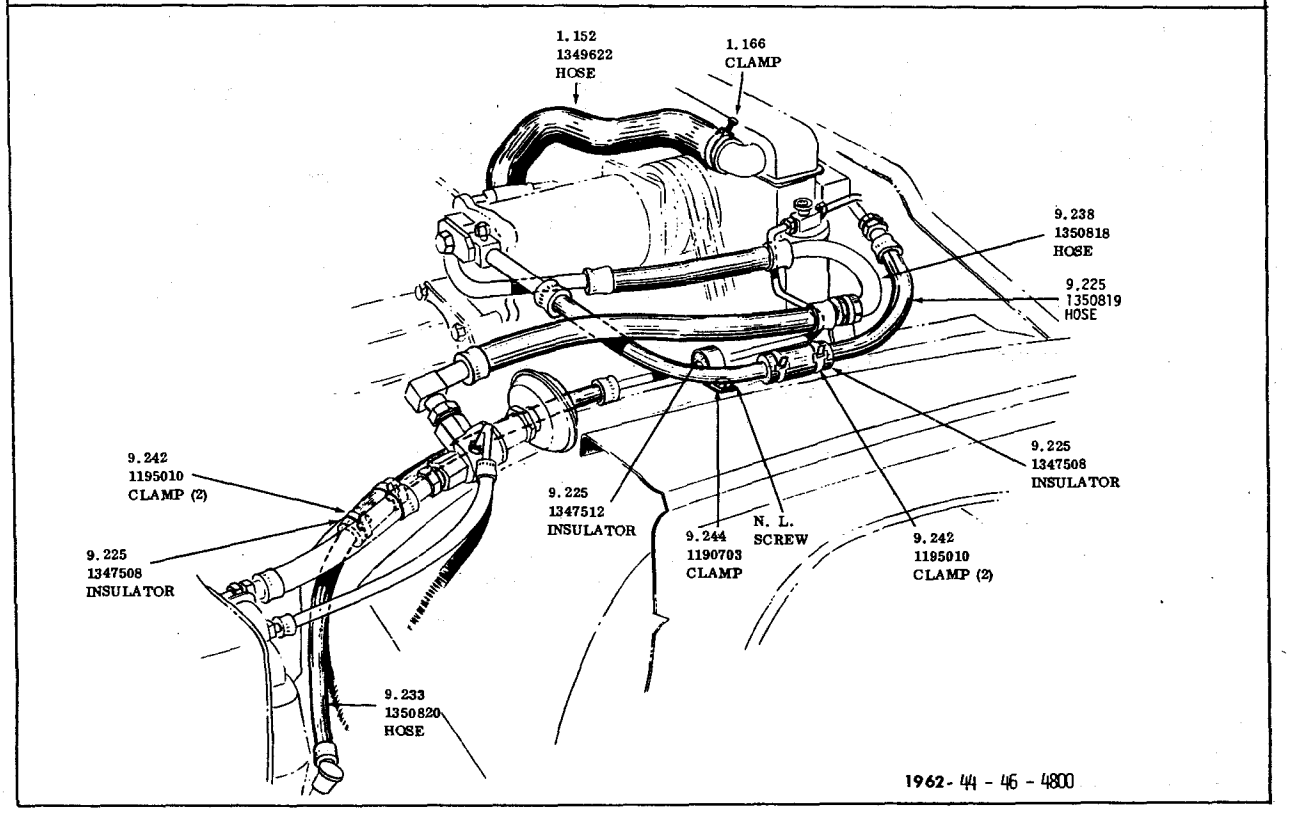

AIR CONDITION HOSE
1961-1962- 44 - 46 - 4800

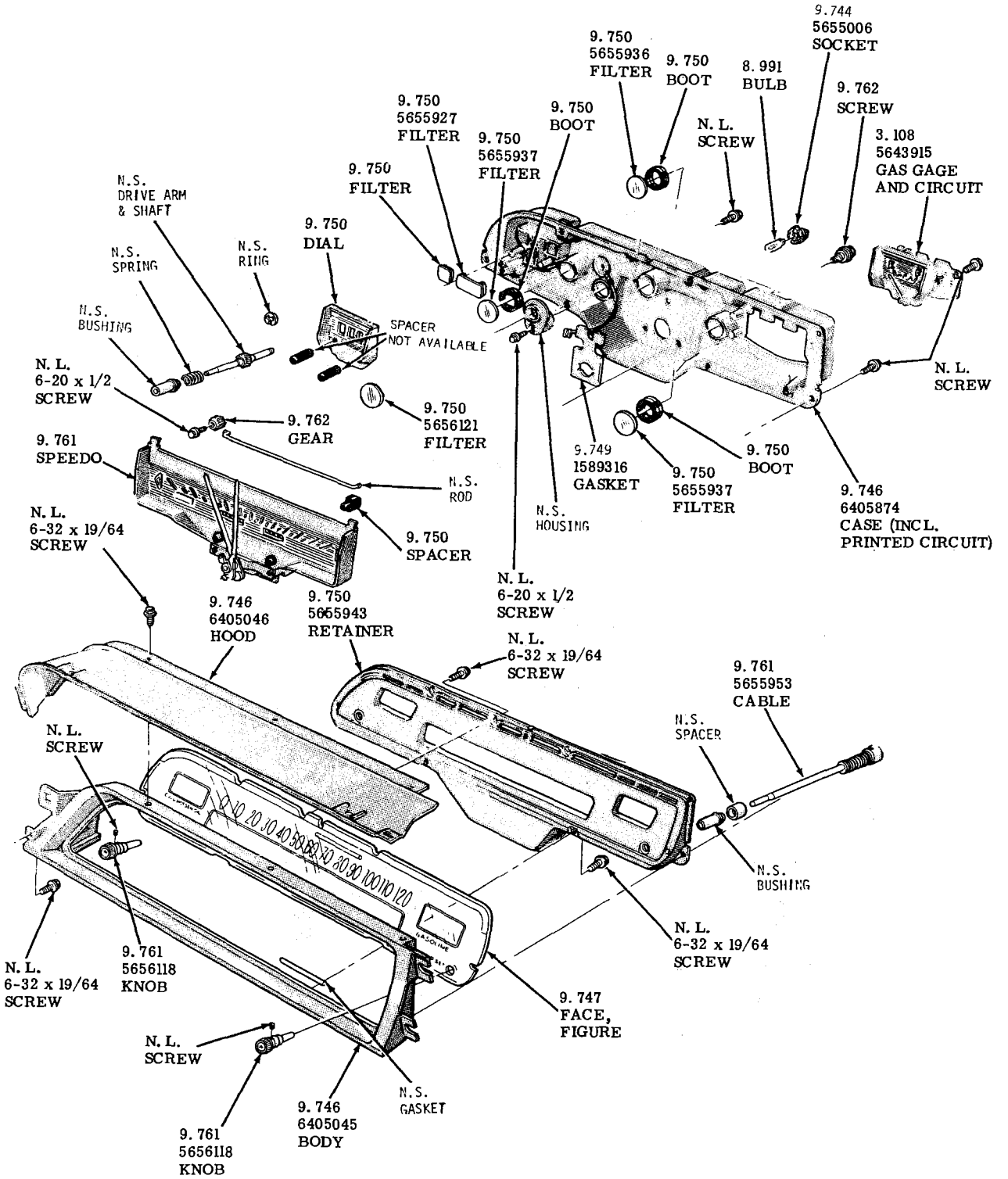

INSTRUMENT CLUSTER
1962 - 4400 - 4600 - 4800

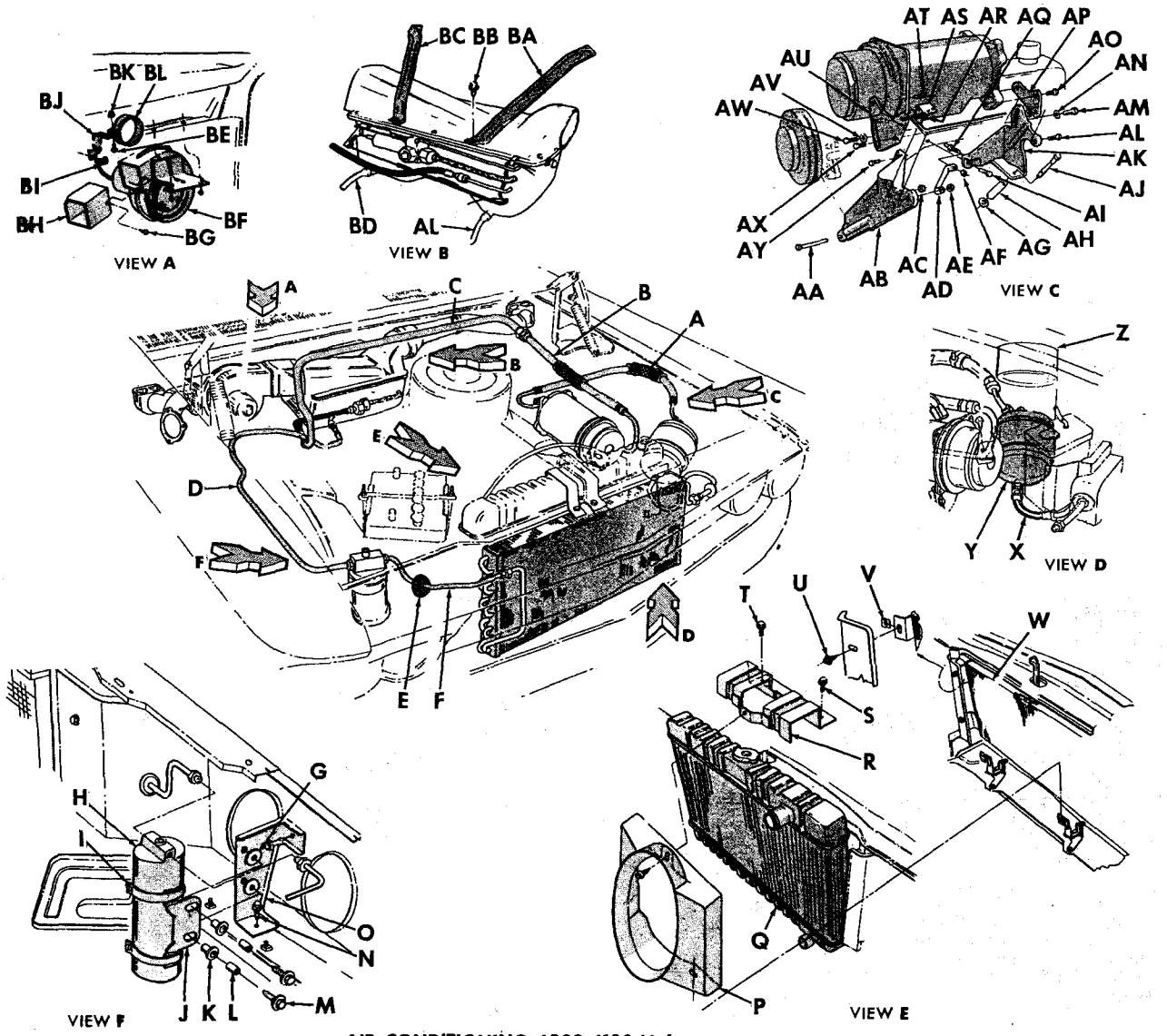

AIR CONDITIONING-4000-4100 V 6

AIR CONDITIONER 1963—4000-4100—V-6

A	HOSE, Compr. Discharge	9.225
B	HOSE, Compr. Suction	9.238
C	PIPE, Valve to Evaporator Suction	9.238
D	PIPE, Receiver to Evaporator	9.238
E	GROMMET, Pipe to Baffle	N.L.
F	PIPE, Receiver to Condenser	9.227
G	SHIM, Brkt. to Support	9.195
H	RECEIVER & DEHYDRATOR	9.195
I	CLAMP, Dehydrator to Brkt	9.195
J	BRACKET, Dehydrator	9.195
K	INSULATOR, Brkt. to Support	9.195
L	SPACER, Dehydrator to Support	9.195
M	SCREW, Hex. Flat Washer 1/4 - 14 x 1"	N.L.
N	SCREW, Hex. Washer Hd. 1/4 - 14 x 5/8"	N.L.
O	SUPPORT, Dehydrator Brkt.	9.195
P	SHROUD	1.277
Q	RADIATOR	1.219
R	BRACKET, Support - Upper	1.270
S	BOLT, Radiator Mounting	N.L.
T	BOLT, Radiator Mounting	N.L.
U	SCREW, Hex.Washer Ring Hd. 1/4 - 14 x 41/64"	N.L.
V	NUT, Anchor J 1/4 - 14	N.L.
W	CONDENSER	9.190
X	PIPE, Condenser to Muffler	9.226
Y	MUFFLER	9.225
Z	BRACKET, Muffler	9.225
AA	BOLT, Hex. Hd. 5/16 - 24 x 1/2"	N.L.
AB	BRACKET, Mtg. - Front	9.171
AC	NUT, Hex. 3/8 - 16	N.L.
AD	BRACE, Front Mtg. Brkt. to Exhaust Mainfold	9.171
AE	NUT, Hex. 3/8 - 16	N.L.
AF	NUT, Hex. 3/8 - 16	N.L.
AG	WASHER, Flat 7/8 x 15/32"	N.L.
AH	SPACER, Rear Mtg.Brkt. to Cyl. Head	9.171
AI	BOLT, Hex. Hd. 3/8-16 x 3/4"	N.L.
AJ	BOLT, Hex. Hd. 7/16-14 x 5 5/64"	N.L.
AK	BRACKET, MTG., Rear	9.171
AL	BOLT, Hex. Hd. 3/8-16 x 7/8"	N.L.
AM	BOLT, Hex. Hd. 3/8-16 x 7/8"	N.L.
AN	WASHER, 3/8-16	N.L.
AO	BOLT, Hex. Hd. 3/8-16 x 7/8"	N.L.
AP	ADAPTER, Rear	9.171
AQ	BOLT, Manifold 3/8 - 16 x 1 1/4"	N.L.
AR	BOLT, Hex. Hd. 5/16 - 24 x 1/2"	N.L.
AS	BRACKET, Hoses	9.242
AT	BOLT, Hex.Hd. 5/16 - 24 x 1/2"	N.L.
AU	ADAPTER, Front	9.171
AV	WASHER, 3/8 - 16	N.L.
AW	BOLT, Hex. Hd. 3/8 - 16 x 7/8"	N.L.
AX	BOLT, Hex. Hd. 3/8 - 16 x 7/8"	N.L.
AY	BOLT, Hex. Hd. 3/8 - 16 x 3/4"	N.L.
AZ	HOSE, Evaporator Drain - L.H.	9.220
BA	BRACKET, Evaporator Mtg. - Rear L.H.	9.211
BB	SCREW, Hex. Washer Hd. 1/4 - 14 x 1"	N.L.
BC	BRACKET, Evaporator Mtg. - Rear R.H.	9.211
BD	HOSE, Evaporator Drain - R.H.	9.220
BE	SCREW, Hex. Hd. 10-24 x 5/8"	N.L.
BF	BLOWER & AIR INLET	9.779
BG	SCREW, Hex. Washer Hd. Top 8 - 15 x 1/2"	N.L.
BH	DUCT, Evaporator to Blower	9.211
BI	SCREW, Hex. Hd. 10 - 24 x 5/8"	N.L.
BJ	SUPPORT, Blower Motor to Toe Pan	9.779
BK	NUT, Hex. Flange 10 - 24	N.L.
BL	CLAMP, Blower Motor	9.779

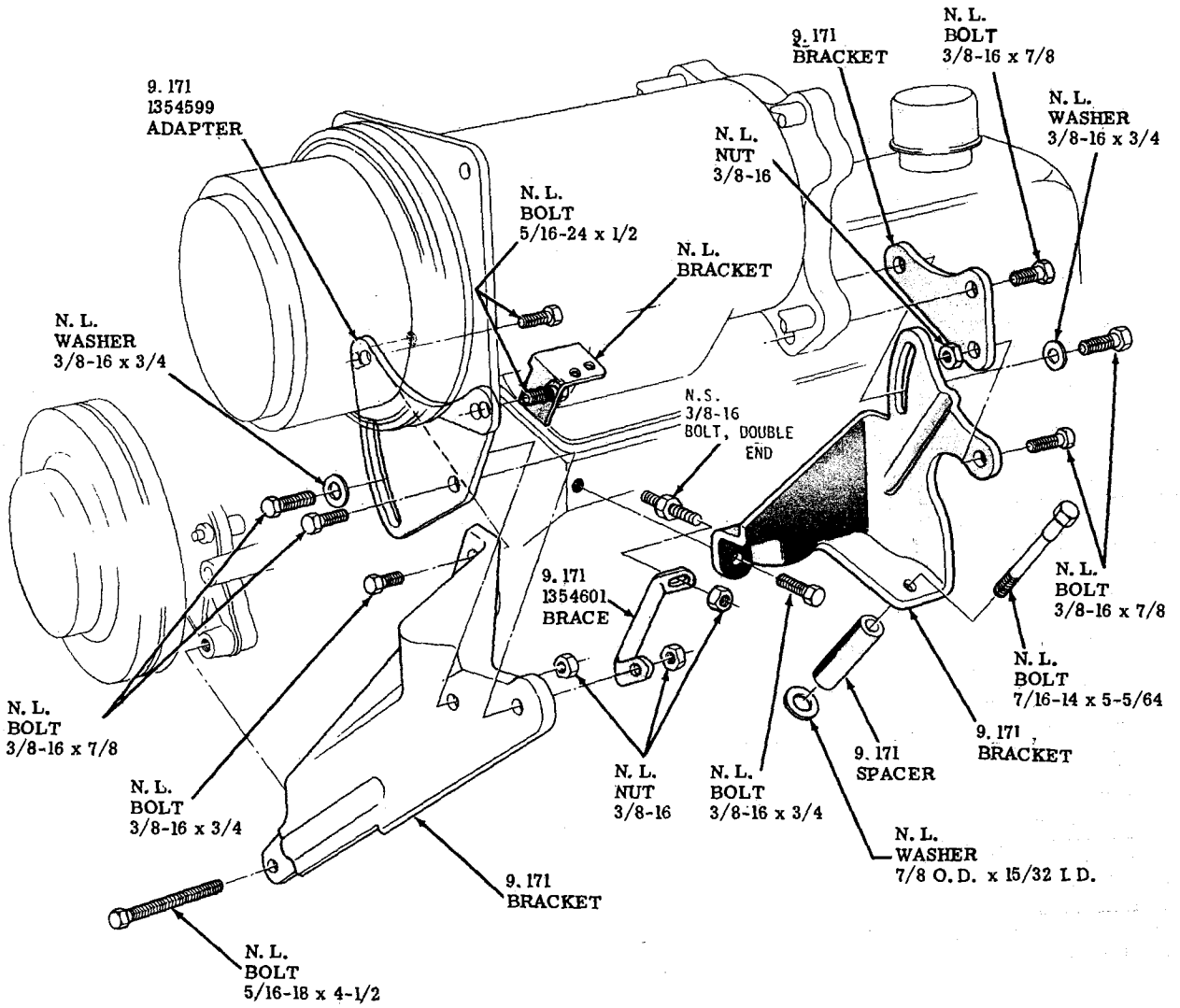

COMPRESSOR ATTACHING PARTS 1962 - 4000 V-6 2ND TYPE

MEMORANDA

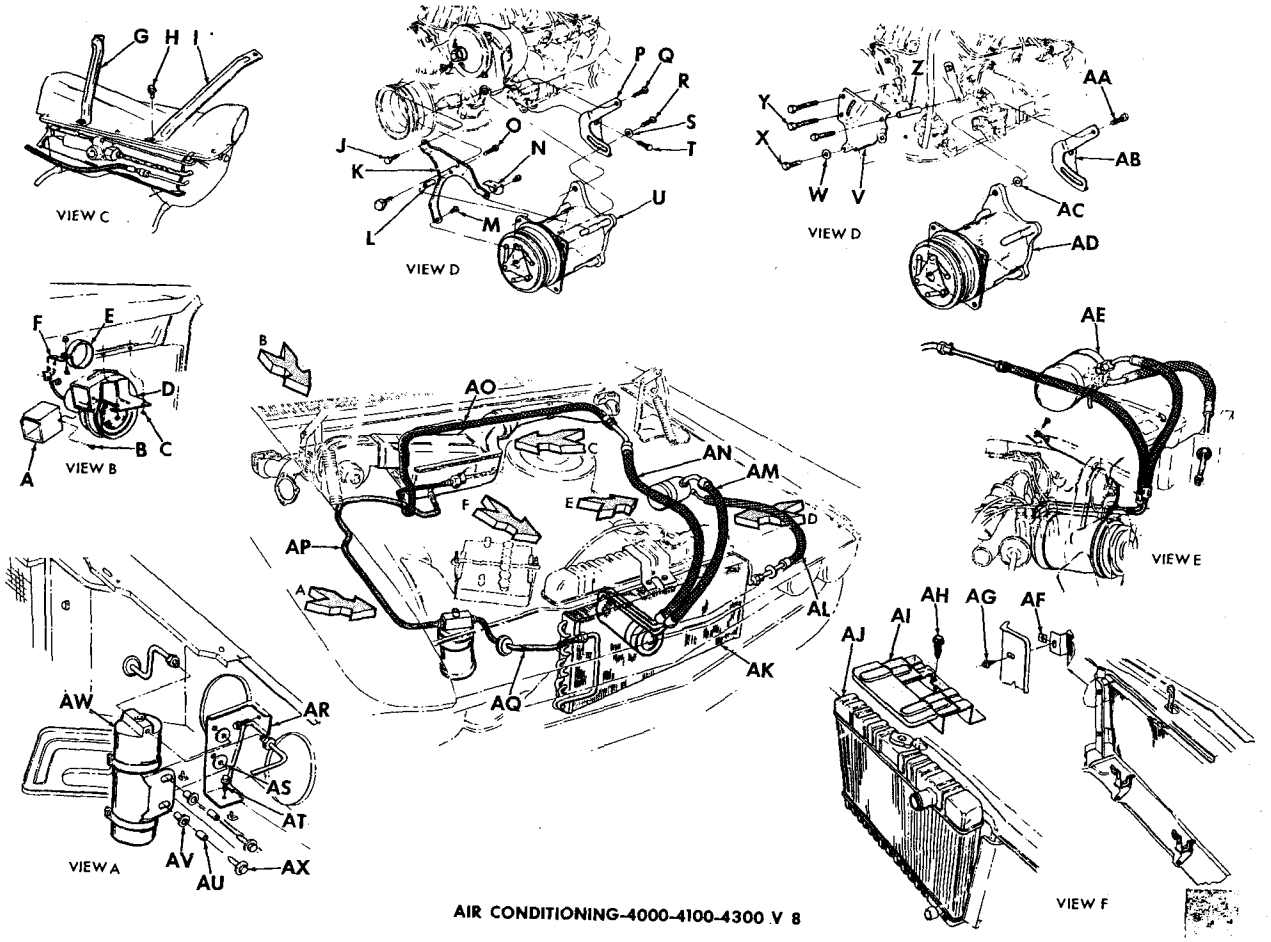

AIR CONDITIONING-4000-4100-4300 V 8

AIR CONDITIONING
1963—4000-4100-4300-V8

A	DUCT	9.211
B	SCREW, #10-24 x 5/8"	N.L.
C	SCREW, #10-24 x 5/8"	N.L.
D	BLOWER	9.779
E	CLAMP	9.779
F	SUPPORT	9.779
G	BRACKET	9.211
H	SCREW, 1/4-14 x 1"	N.L.
I	BRACKET	9.211
J	BOLT, 3/8-16 x 7/8	N.L.
K	SPACER	9.171
L	ADAPTER, Front	9.171
M	BOLT, 5/16-24 x 1/2"	N.L.
N	BRACKET, Hose	N.L.
O	BOLT, 5/16-24 x 1 5/8	N.L.
P	BRACE, Rear	9.171
Q	BOLT, 3/8-16 x 1 3/4	N.L.
R	BOLT, 3/8-16 x 1	N.L.
S	BOLT, 7/16-14 x 1 1/4	N.L.
T	WASHER, 13/16 x 13/32	N.L.
U	COMPRESSOR (complete)	N.L.
V	WASHER, 3/16 x 13/32	N.L.
W	BOLT, 3/8-16 x 3 3/4	N.L.
X	BOLT, 3/8-16 x 1	N.L.
Y	BOLT, 5/16-18 x 4 5/8	N.L.
Z	SPACE	9.171
AA	BOLT, 3/8-16 x 1 1/8	N.L.
AB	BRACE, Rear	9.171
AC	WASHER, 1 x 13/32	N.L.
AD	COMPRESSOR (complete)	N.L.
AE	MUFFLER	9.225
AF	CLIP J	N.L.
AG	SCREW, 1/4-14 x 41/64	N.L.
AH	SCREW, Radiator	N.L.
AI	SHIELD, Fan (reference	N.L.
AJ	RADIATOR (A. C. only)	1.219
AK	CONDENSER	9.190
AL	HOSE, Condenser to Muffler	9.226
AM	HOSE, Discharge	9.225
AN	HOSE, Compressor Suction	9.238
AO	PIPE, Evaporator, Suction	9.238
AP	PIPE, Receiver to Evaporotor	9.238
AQ	PIPE, Receiver to Condenser	9.227
AR	BRACKET, Dehydrator	9.195
AS	SHIM	N.L.
AT	SCREW, 1/4-14 x 1"	N.L.
AU	SPACER	9.195
AV	INSULATOR	9.195
AW	RECEIVER AND DEHYDRATOR	9.195
AX	SCREW, 1/4-14 x 5/8	N.L.

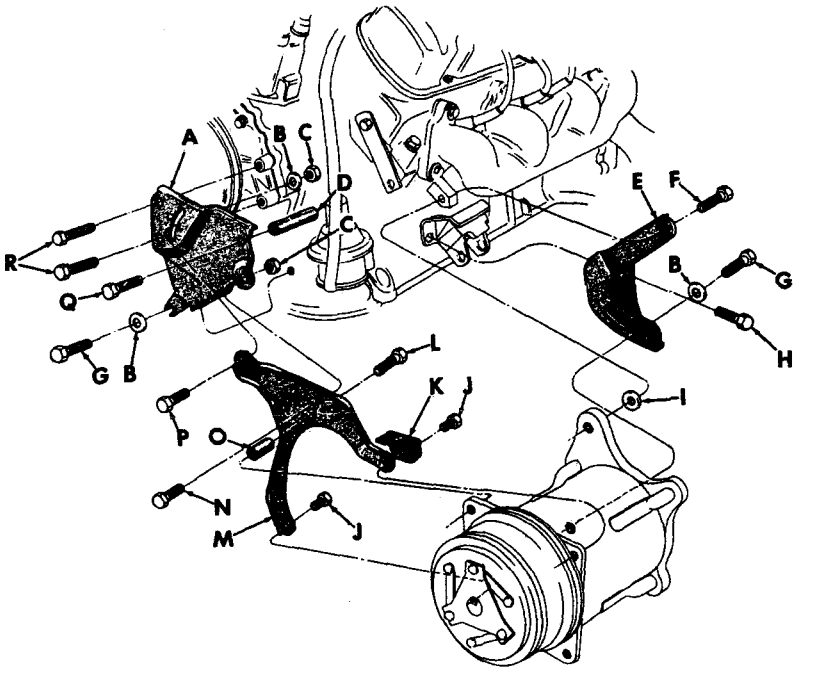

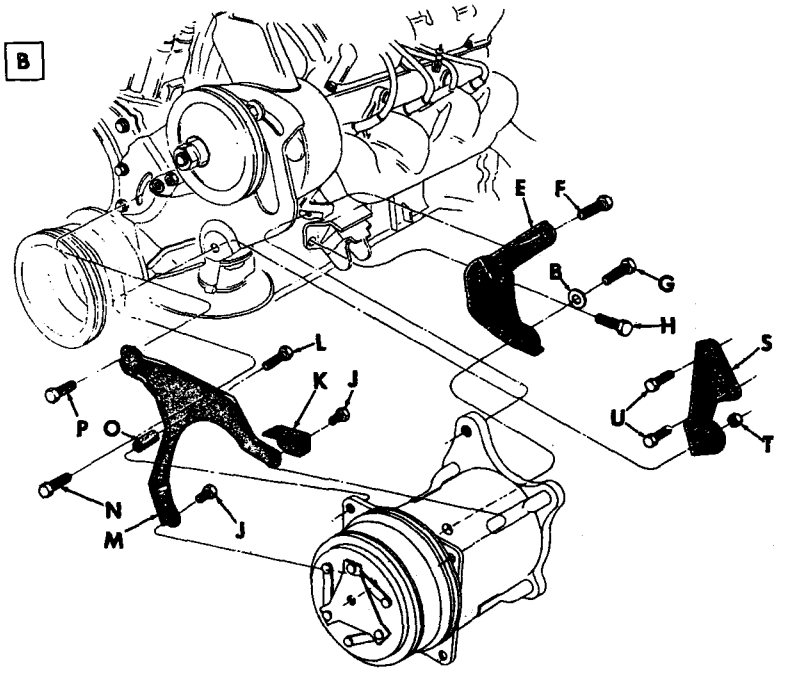

COMPRESSOR ATTACHING PARTS—1962—4000-4100-4300-V-8 LESS POWER STEERING

COMPRESSOR ATTACHING PARTS—1962-4000-4100-4300 V-8 WITH POWER STEERING

A	BRACKET, Mounting—Front	9.171
B	WASHER, Plain—13/32 x 13/16 x 1/16	N. L.
C	NUT, Hex.—3/8-16	N. L.
D	SPACER, Bracket to Cylinder Head	9.171
E	BRACE, Rear	9.171
F	BOLT, Hex. Hd.—3/8-16 x 1 3/4	N. L.
G	BOLT, Hex. Hd.—3/8-16 x 1	N. L.
H	BOLT, Hex. Hd.—7/16-14 x 1 1/4	N. L.
I	WASHER, Plain—.406 x 1.00	N. L.
J	BOLT, Hex. Hd.—5/16-24 x 1/2	N. L.
K	BRACKET, Hose	9.242
L	BOLT, Hex. Hd.—5/16-24 x 1 5/8	N. L.
M	ADAPTER—Front	9.171
N	BOLT, Hex. Hd.—3/8-16 x 1	N. L.
O	SPACER, Compressor to Adapter	9.171
P	BOLT, Hex.—3/8-16 x 7/8	N. L.
Q	BOLT, Hex. Hd.—3/8-16 x 3 3/4	N. L.
R	BOLT, Hex. Hd.—5/16-18 x 4 5/8	N. L.
S	BRACE, Vertical	9.171
T	NUT, Hex.—3/8-16	N. L.
U	BOLT, Hex. Hd.—3/8-16 x 1 1/8	N. L.

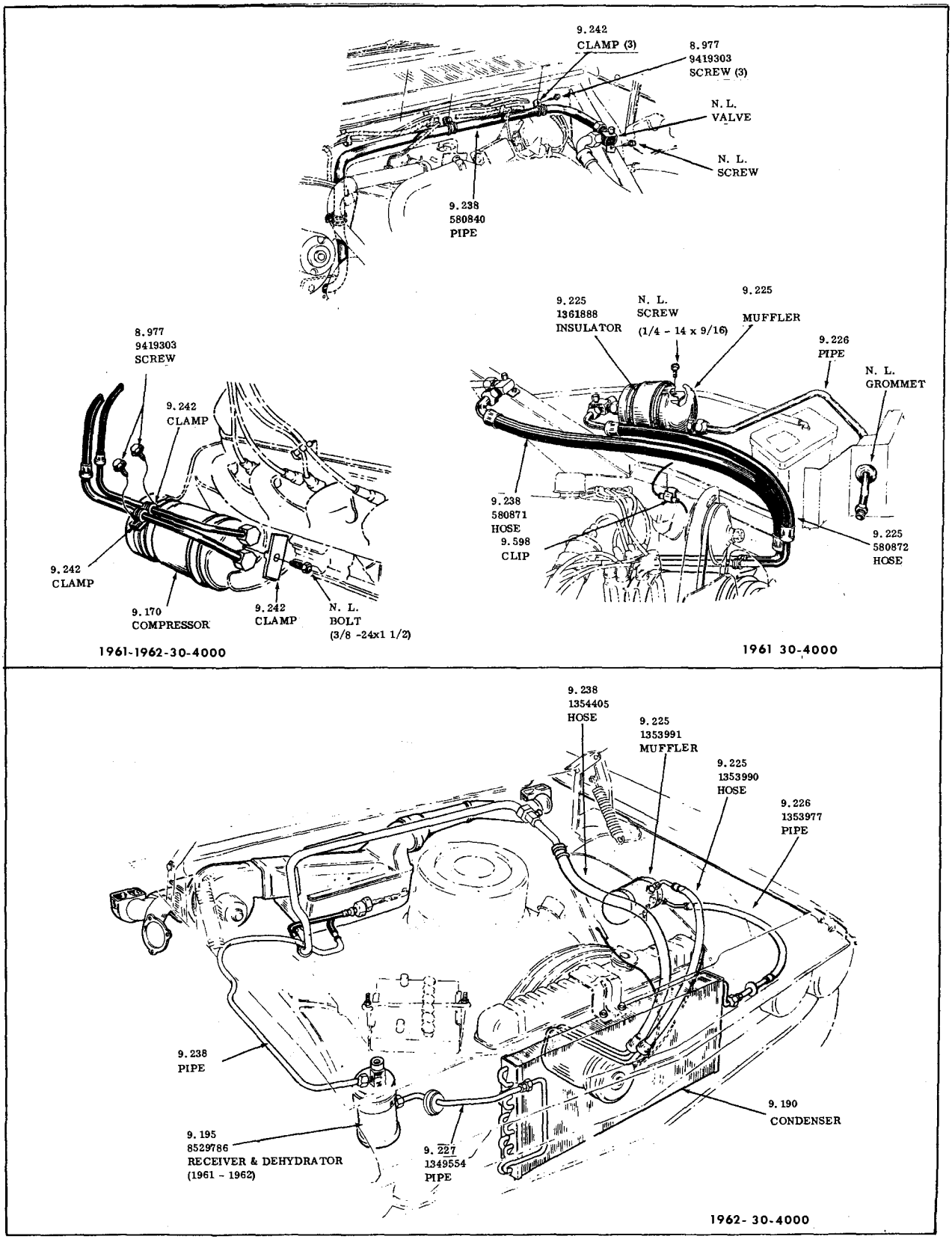

AIR CONDITION HOSE
1961-1962-30-4000

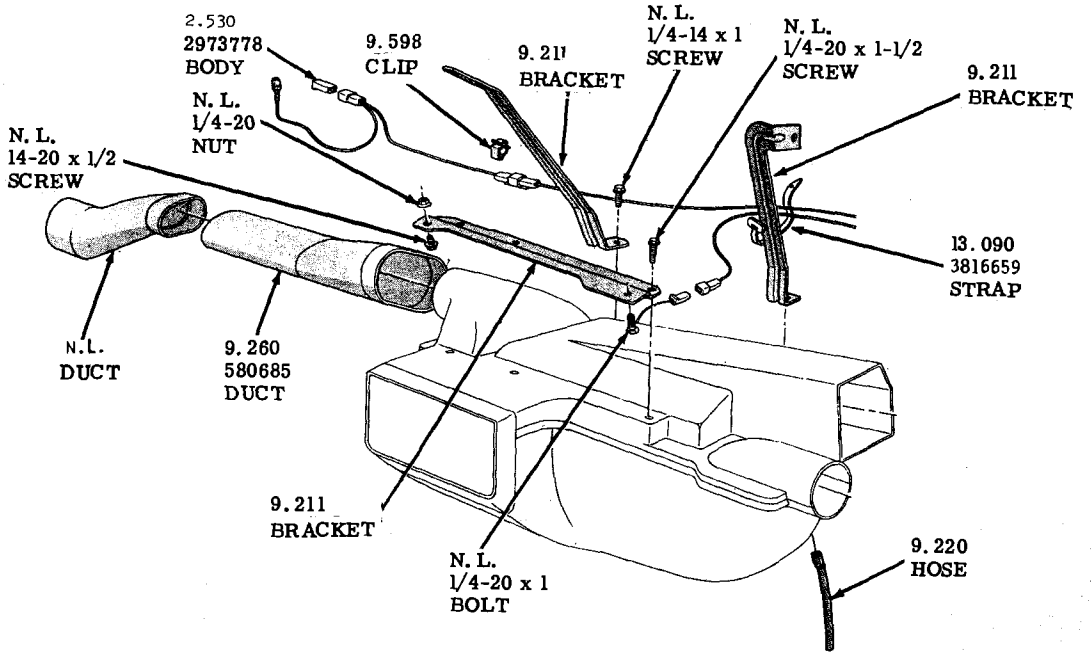

AIR CONDITIONING BLOWER
DUCTS & ATTACHING PARTS
1961 - 1962 - 4000 - 4100 - 4300

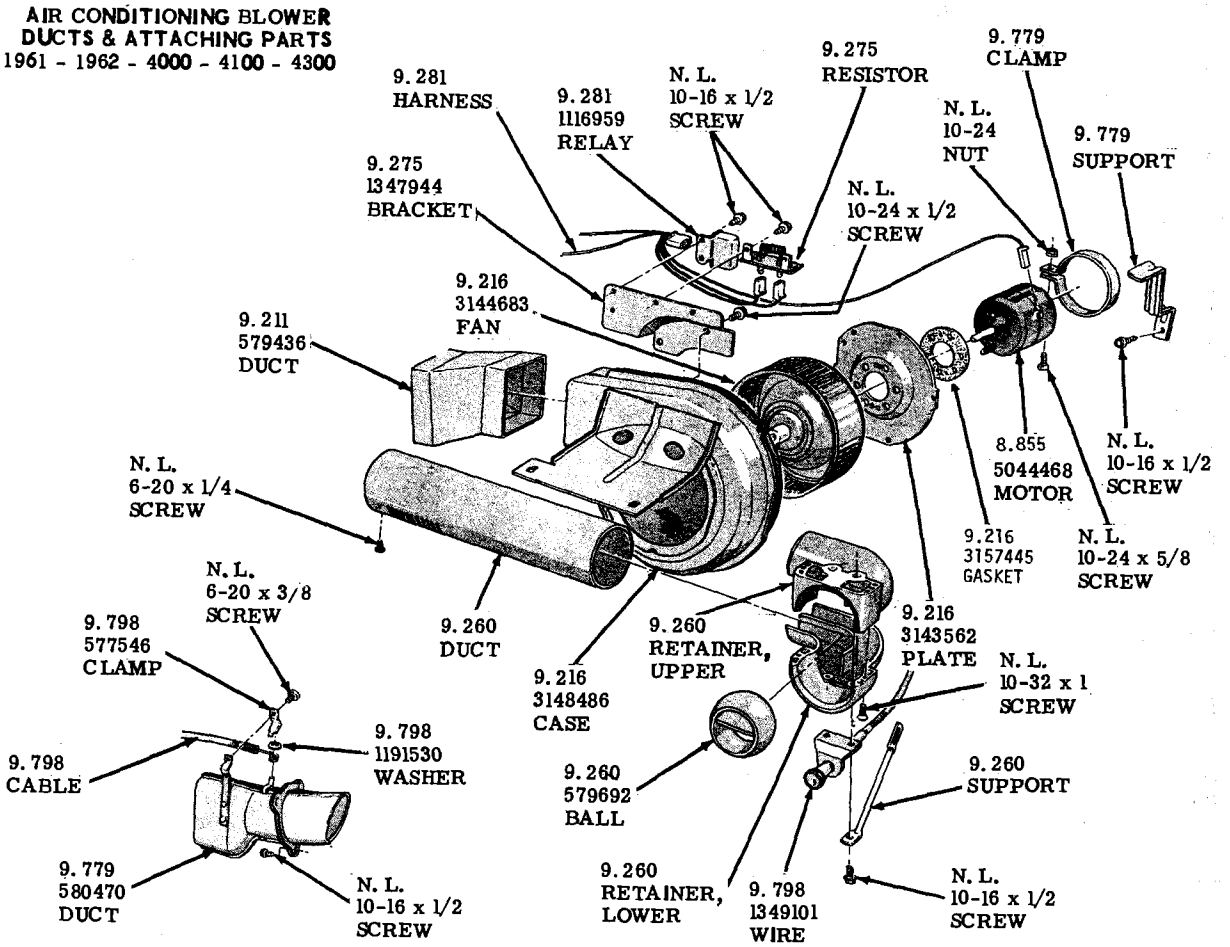

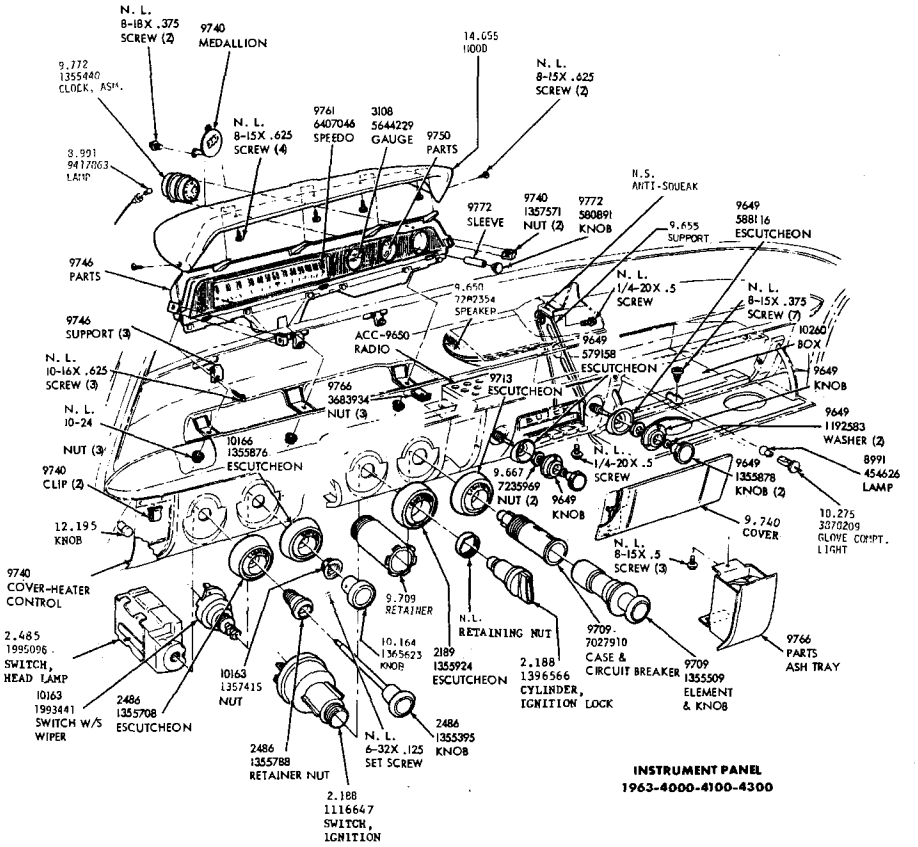

INSTRUMENT PANEL
1963-4000-4100-4300

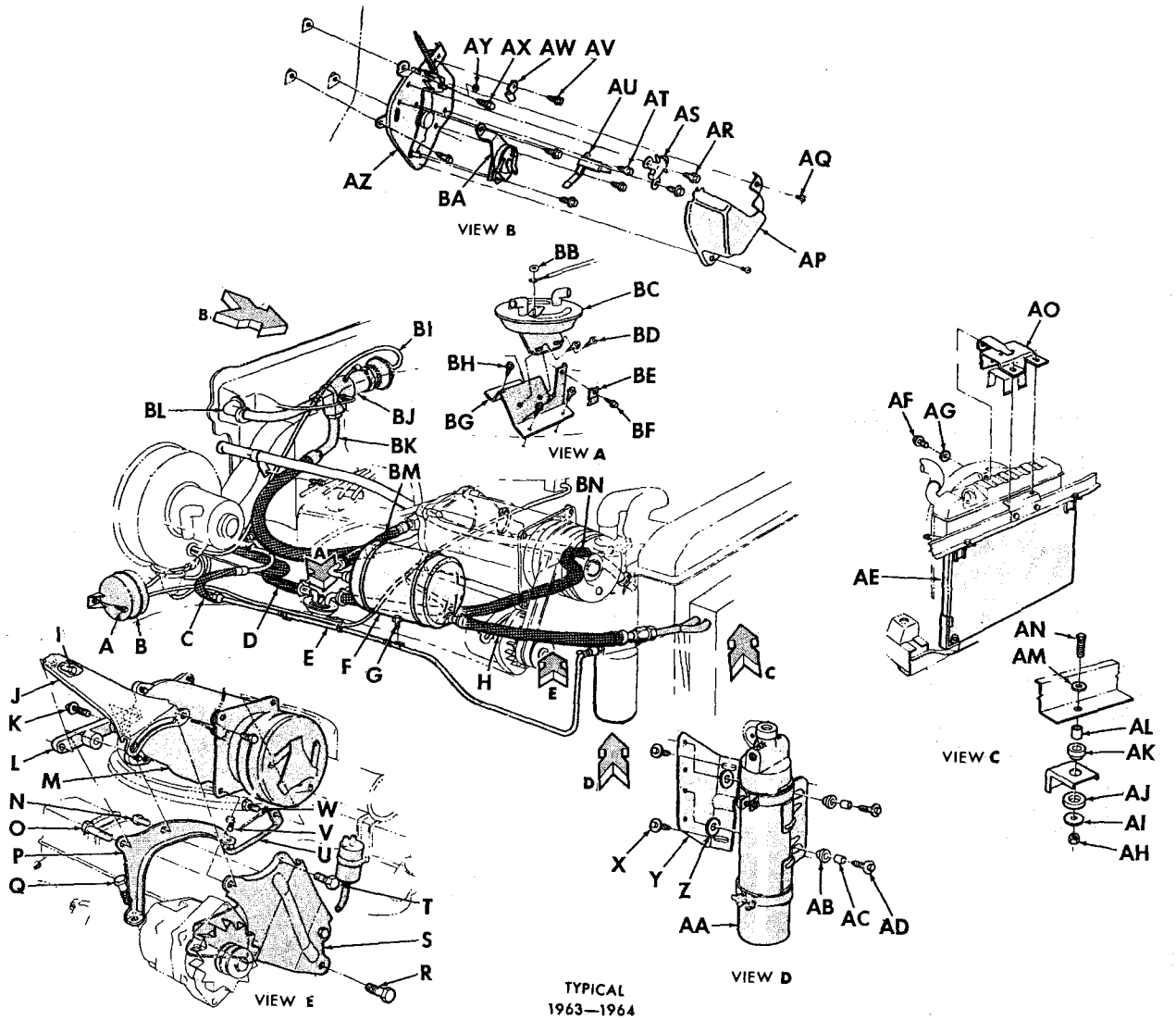

TYPICAL
1963—1964
AIR CONDITIONING-4400-4600-4800

TYPICAL 1963 — 1964—4400-4600-4800 AIR CONDITIONING

A	SCREW, Hex Washer Hd Tap 1/4-14 x 1/2"	N.L.
B	TANK, Vacuum	9.798
C	HOSE, Liquid	9.233
D	HOSE, Heater Water Inlet	8.846
E	CLAMP, Vacuum to Liquid Line	9.798
F	MUFFLER	9.225
G	SCREW, Hex Washer Hd Tap 10-16 x 5/8"	N.L.
H	HOSE, Muffler to Condenser	9.225
I	BOLT, Hex 3/4-16 x 15/16"	N.L.
J	BRACE, Delcotron & Compressor Mtg.	2.317
K	BOLT, Spacer to Compressor	3.275
L	SPACER, Rear Brkt.	9.171
M	COMPRESSOR, Complete	N.L.
N	BOLT, Hex 3/8-16 x 15/16"	N.L.
O	BOLT, Hex 3/8-16 x 2 1/8"	N.L.
P	BRACKET, Rear	9.171
Q	BOLT, Rear Bracket to Cylinder Hd.	0.293
R	BOLT, Hex 3/8-16 x 2 1/4	N.L.
S	BRACKET, Front	9.171
T	BOLT, Hex 5/16-24 x 1/2	N.L.
U	BRACE, Compressor	9.171
V	BOLT, Hex 3/8-16 x 3/4	N.L.
W	BOLT, Hex 5/16-24 x 1/2	N.L.
X	SCREW, Hex Hd Tap 1/4-14 x 5/8	N.L.
Y	BRACKET, Mounting	9.195
Z	SHIM	9.195
AA	RECEIVER & DEHYDRATOR	9.195
AB	INSULATOR, Brkt. to Support	9.195
AC	SPACER, Dehydrator to Support	9.195
AD	SCREW, Washer Hd 1/4-14 x 1"	N.L.
AE	CONDENSER	9.190
AF	BOLT, Hex 1/4-20 x 2 3/8"	N.L.
AG	WASHER, Flat 11/32"	N.L.
AH	NUT, Hex 1/4-20	N.L.
AI	WASHER, Flat 17/64"	N.L.
AJ	SHIM	9.198
AK	INSULATOR	0.413
AL	SPACER	9.198
AM	WASHER, Flat 9/32"	N.L.
AN	BOLT, Hex. 1/4-20 x 1	N.L.
AO	BRACKET, Upper Mtg.	1.270
AP	COVER, Circuit Control	9.798
AQ	SCREW, Pan Hd Tap 6-20 x 1/4"	N.L.
AR	SCREW, Hex Hd 8-15 x 3/8"	N.L.
AS	SWITCH, Vacuum (To Control & Volve)	9.798
AT	SCREW, Hex Washer Hd 8-18 x 3/8	N.L.
AU	SWITCH, Master Control - Elec	9.798
AV	SCREW, Hex Washer Hd 8-15 x 1/2"	N.L.
AW	CLAMP, Control Cable	9.798
AX	SCREW, Hex Washer Lid Tapping 10-16 x 3/8	N.L.
AY	WASHER, Spring Grip	9.798
AZ	CONTROL, A.C. Circuit	9.798
BA	SWITCH, Blower	8.852
BB	WASHER, Spring Grip	9.798
BC	VALVE, Heater Temperature Control	9.795
BD	SCREW, Washer Hd Tapping 10-16 x 1/2	N.L.
BE	CLAMP, Cable to Circuit Control	9.798
BF	SCREW, Hex Washer Hd. Tap 8-15 x 1/2	N.L.
BG	SUPPORT, Man. Gate Valve to Skirt	9.798
BH	SCREW, Washer Hd Tapping 10-16 x 1/2	N.L.
BI	HOSE, Control & Vacuum Switch	9.798
BJ	VALVE, Throttling	9.198
BK	HOSE, Suction	9.238
BM	HOSE, Discharge	9.225
BN	HOSE, Water Pump Outlet	8.846

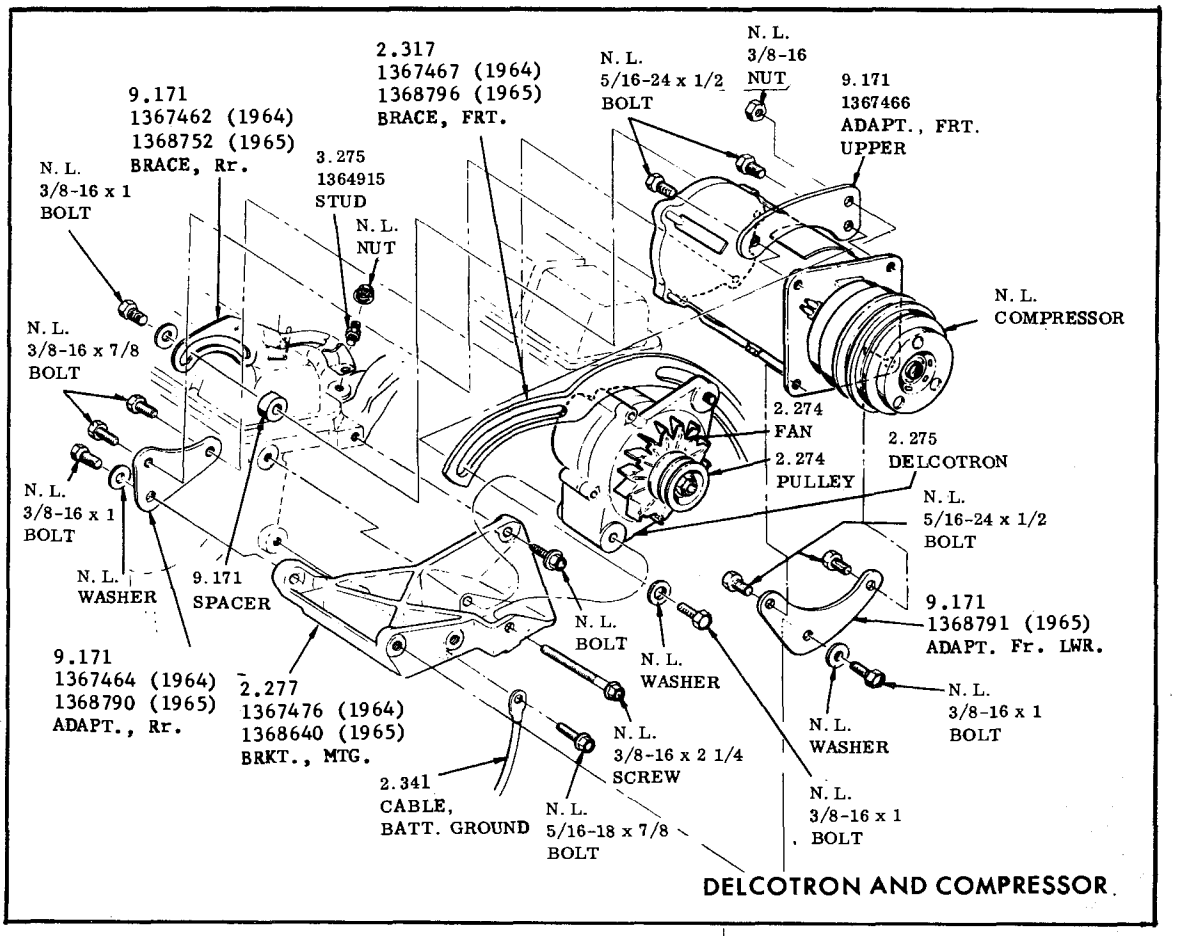

DELCOTRON AND COMPRESSOR

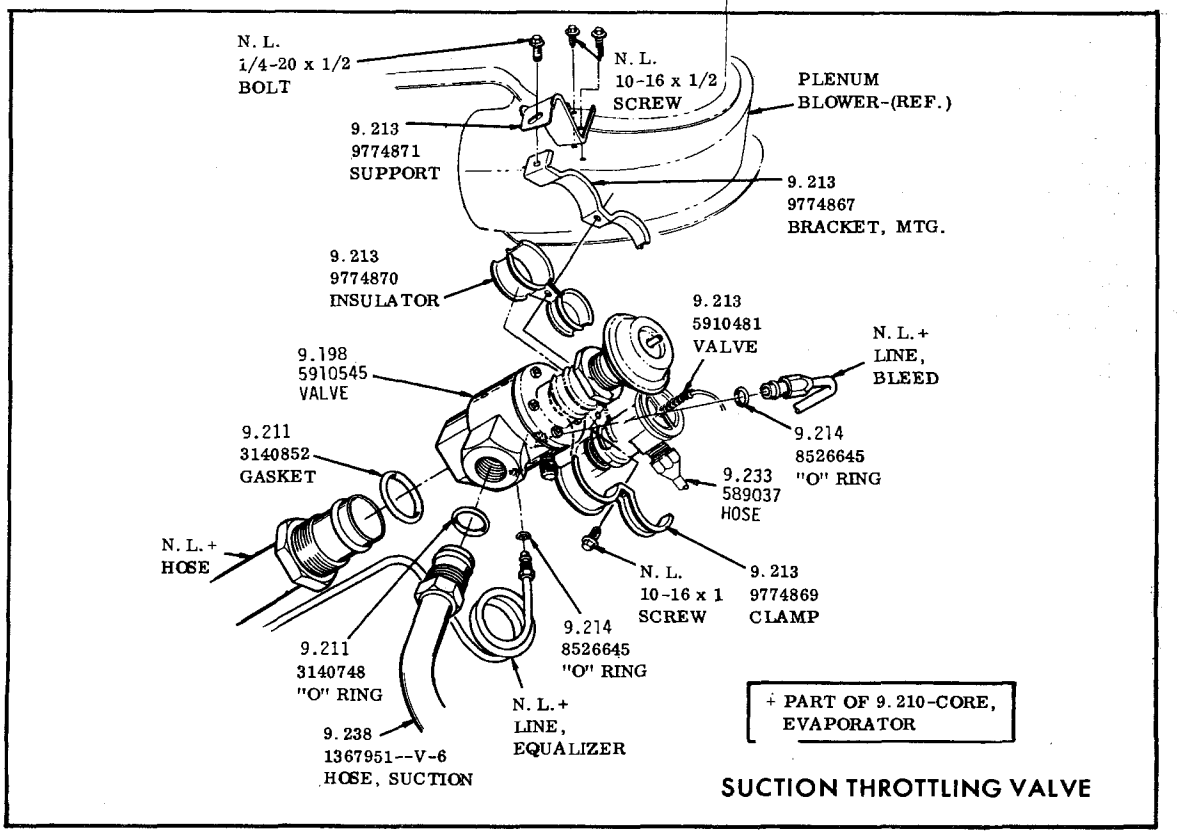

SUCTION THROTTLING VALVE

DELCOTRON AND SUCTION THROTTLING VALVE MOUNTING

1964-1965 SPECIAL - SKYLARK

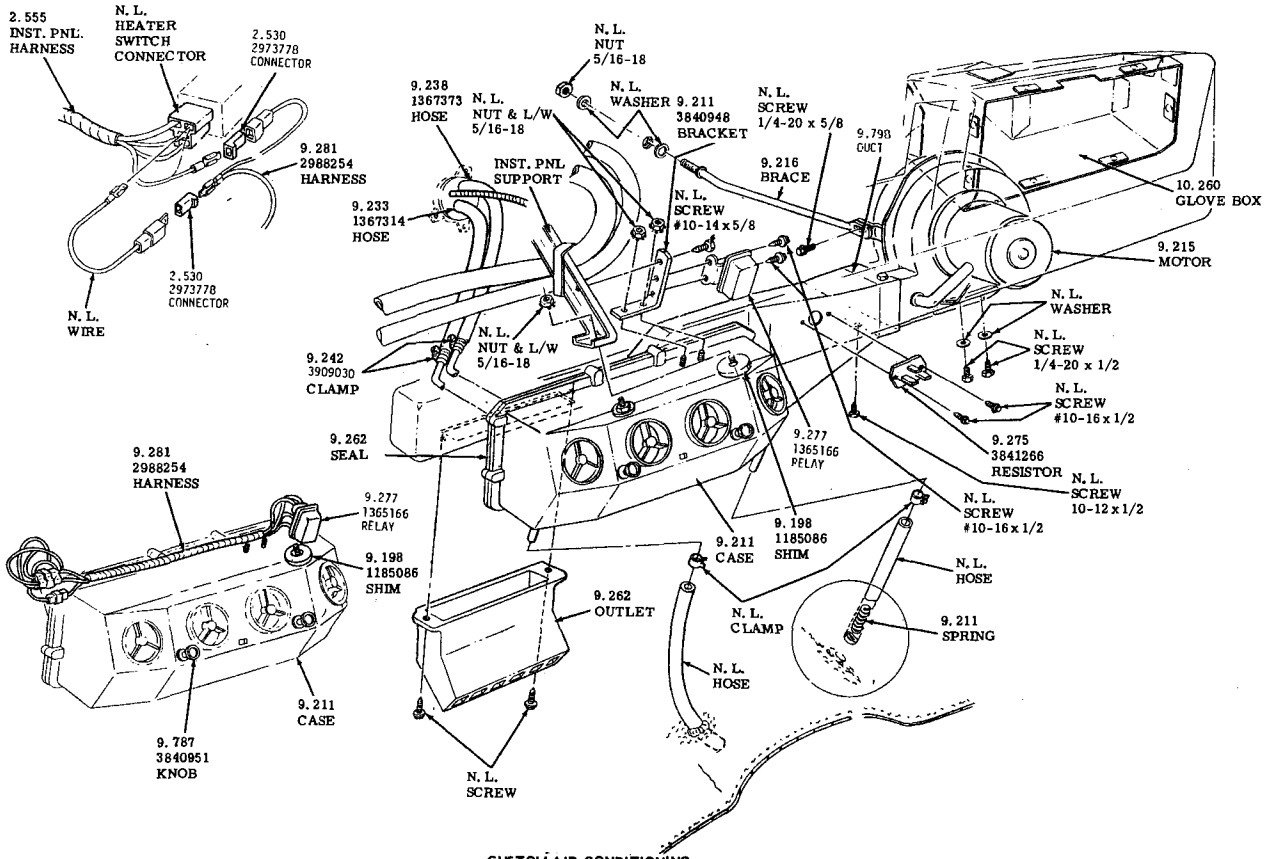

CUSTOM AIR CONDITIONING
1964-1965 SPECIAL & SKYLARK

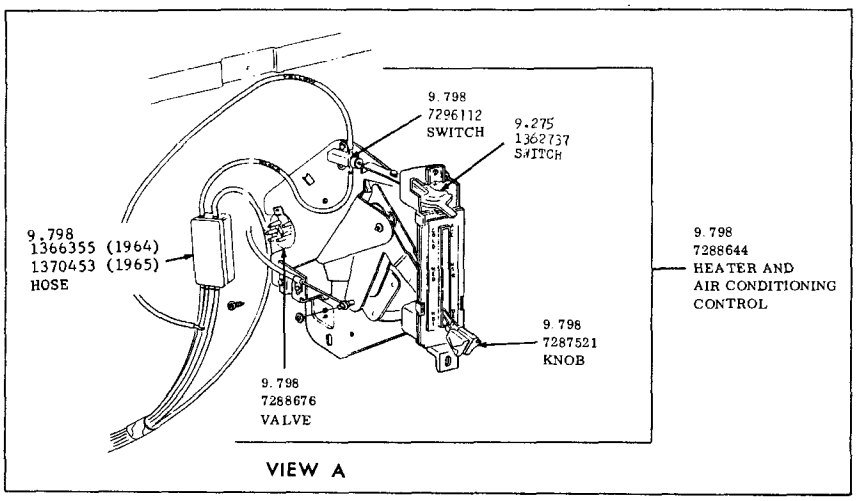

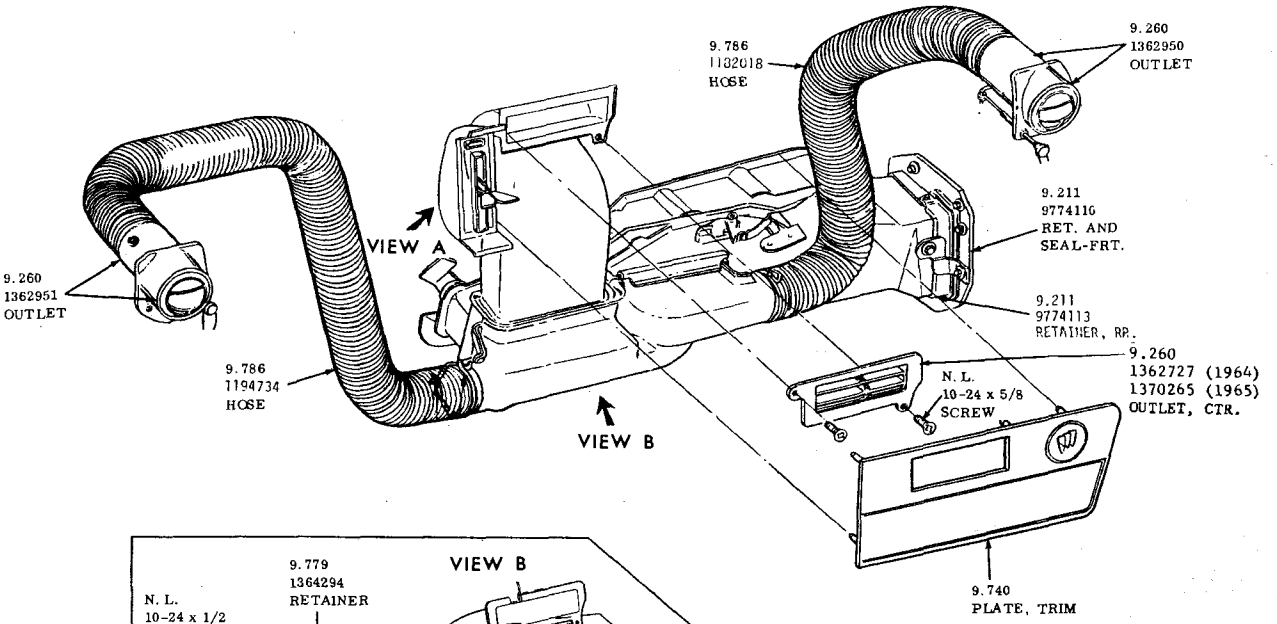

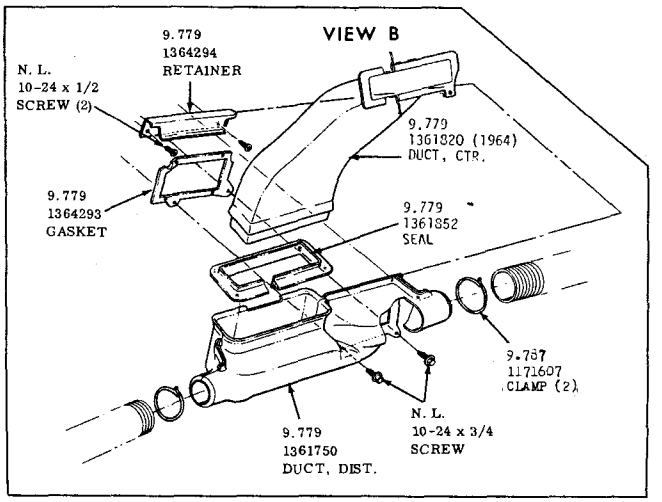

AIR CONDITIONING CONTROLS
1964-1965-SPECIAL-SKYLARK

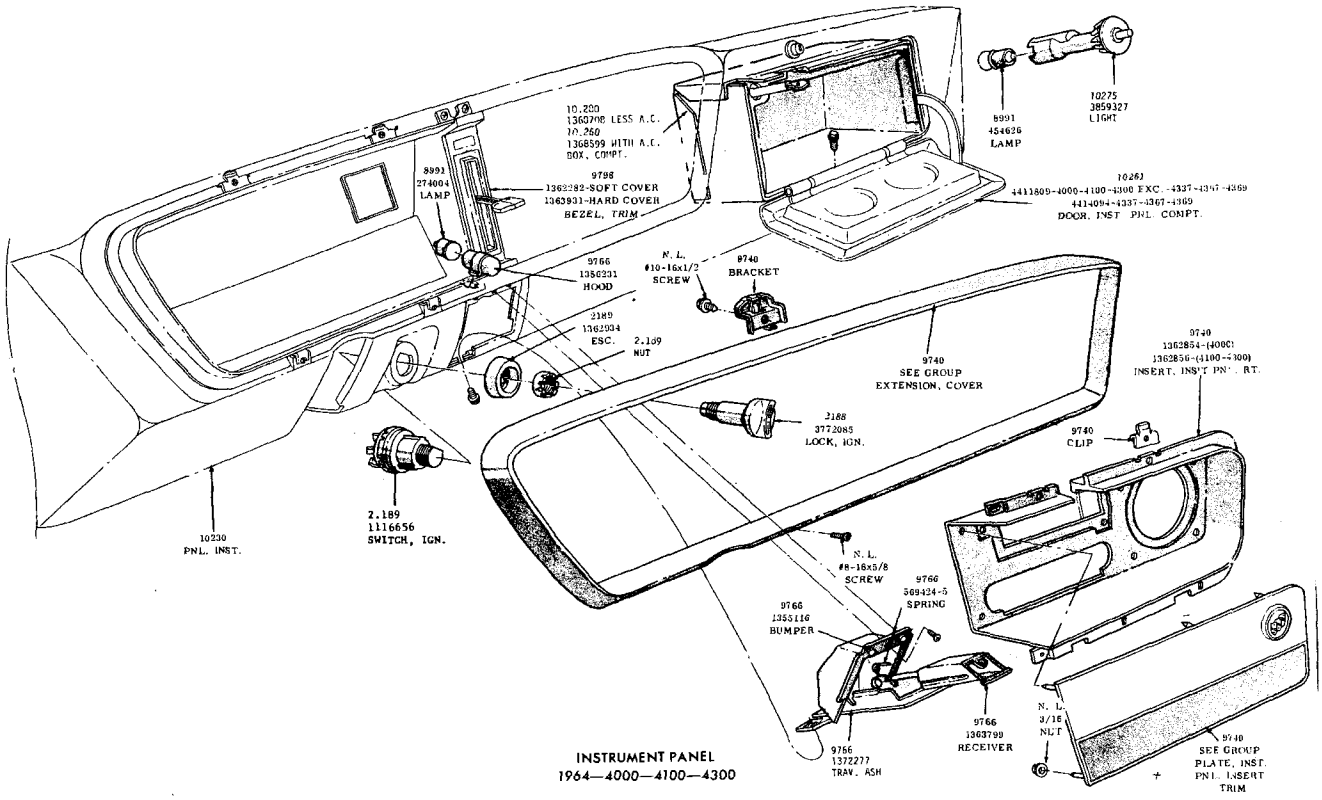

INSTRUMENT PANEL
1964—4000—4100—4300

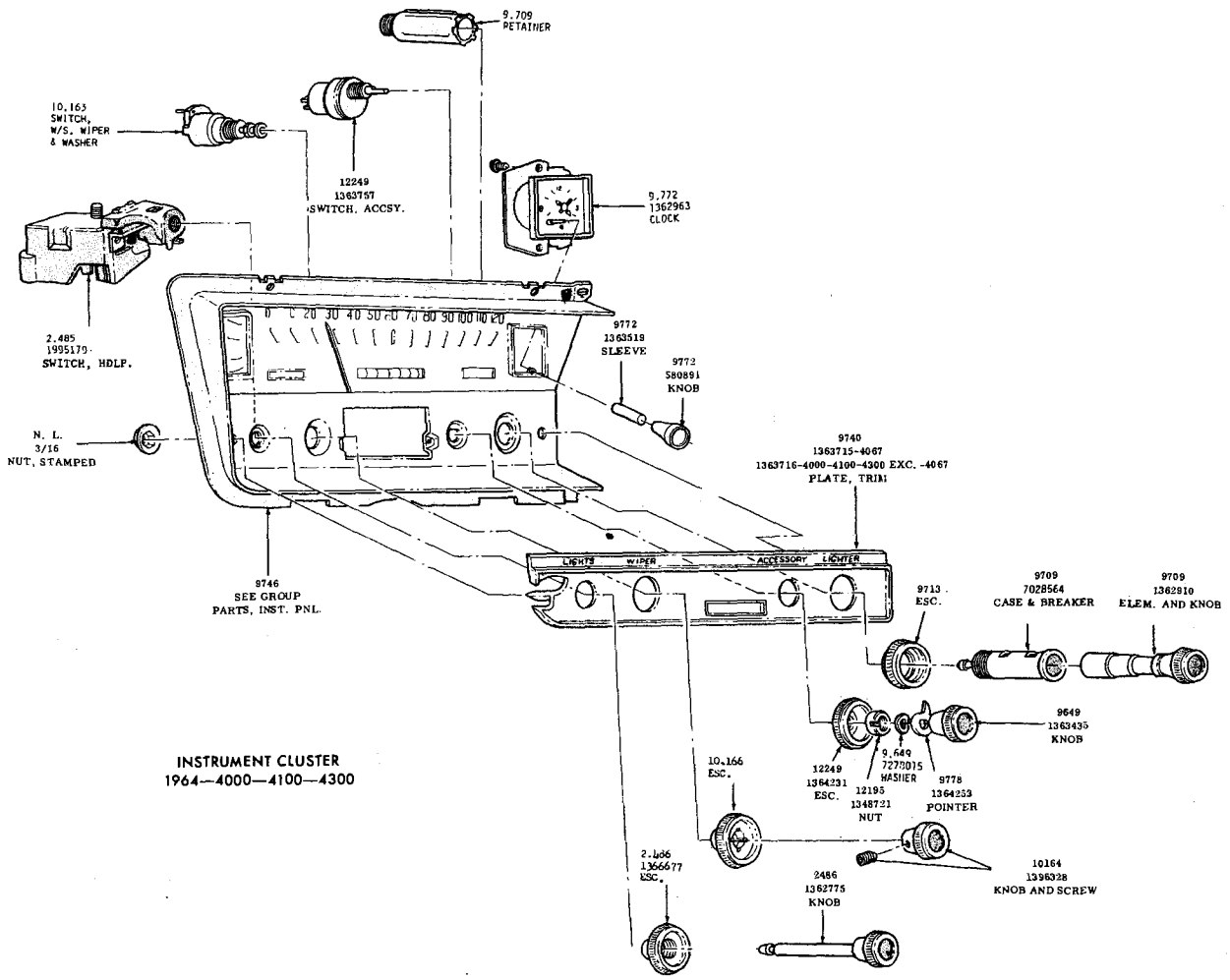

INSTRUMENT CLUSTER
1964—4000—4100—4300

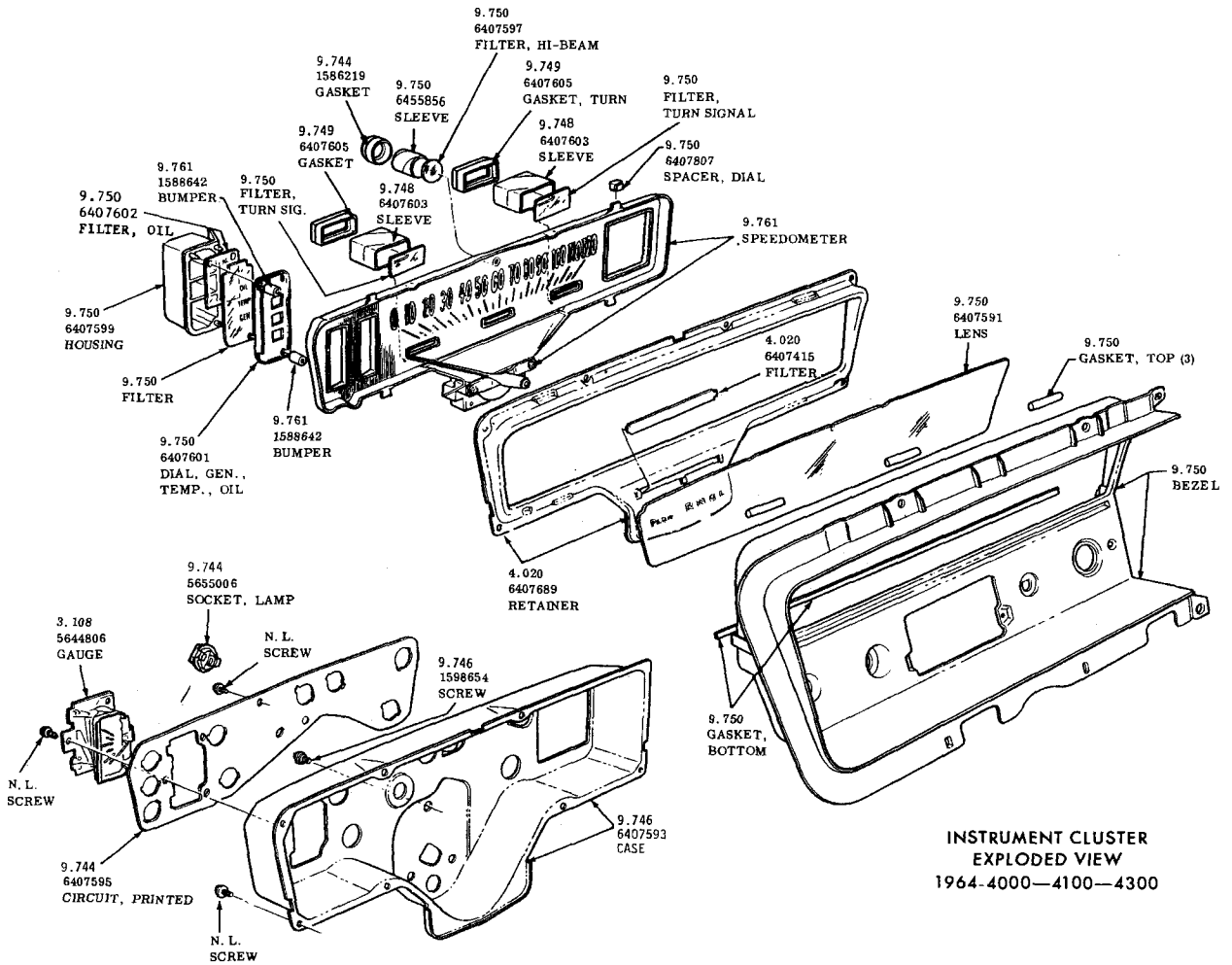

INSTRUMENT CLUSTER
EXPLODED VIEW
1964-4000—4100—4300

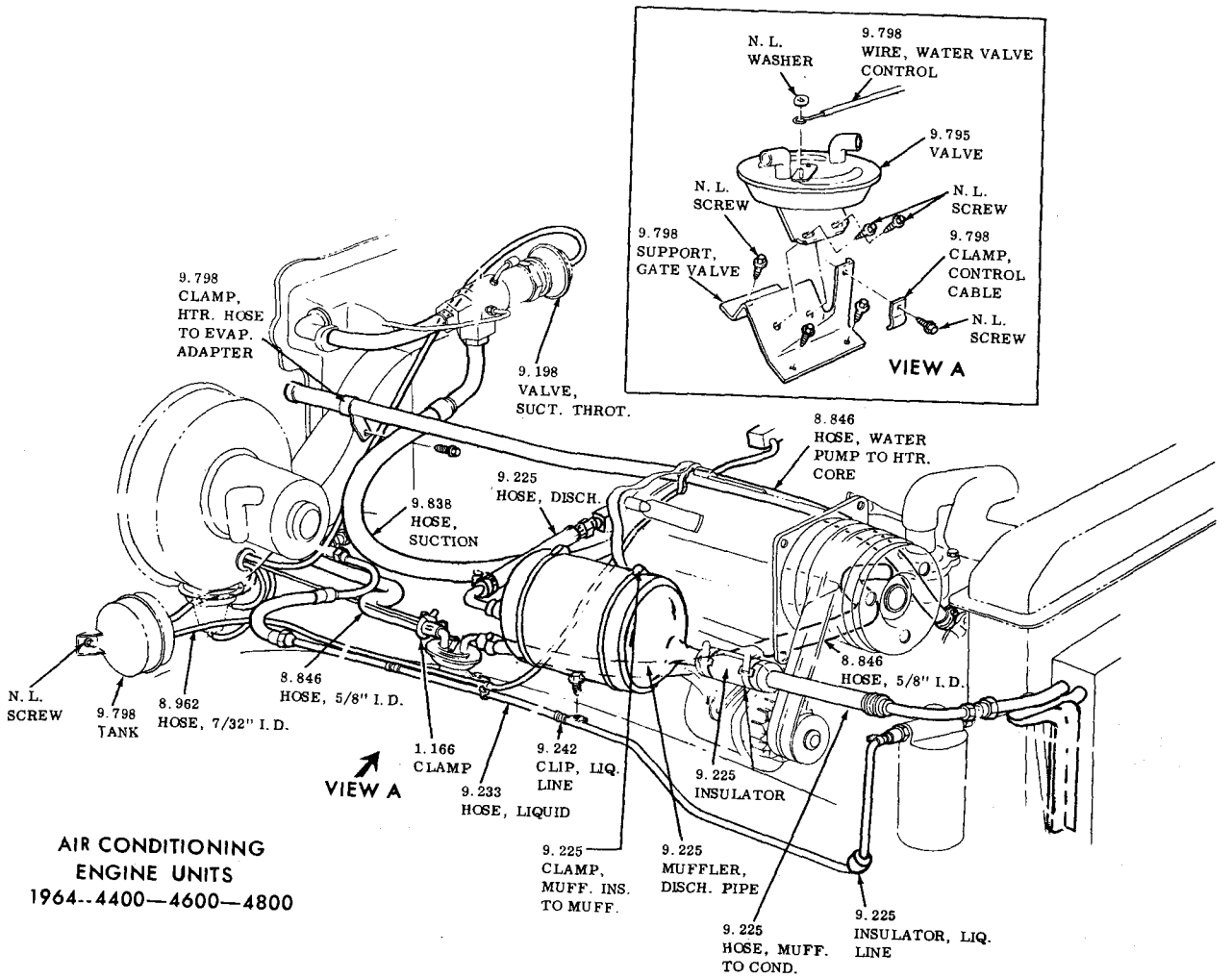

AIR CONDITIONING
ENGINE UNITS
1964--4400—4600—4800

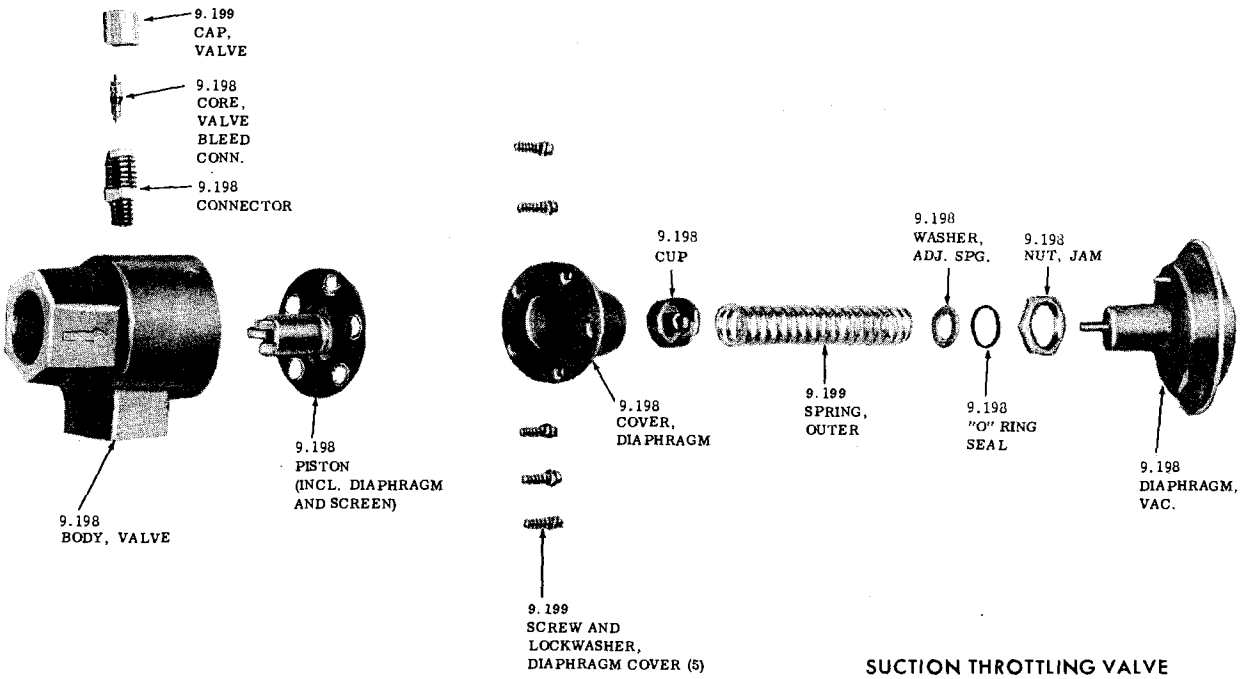

SUCTION THROTTLING VALVE

1964-1965 LE SABRE - WILDCAT
ELECTRA 225 - RIVIERA

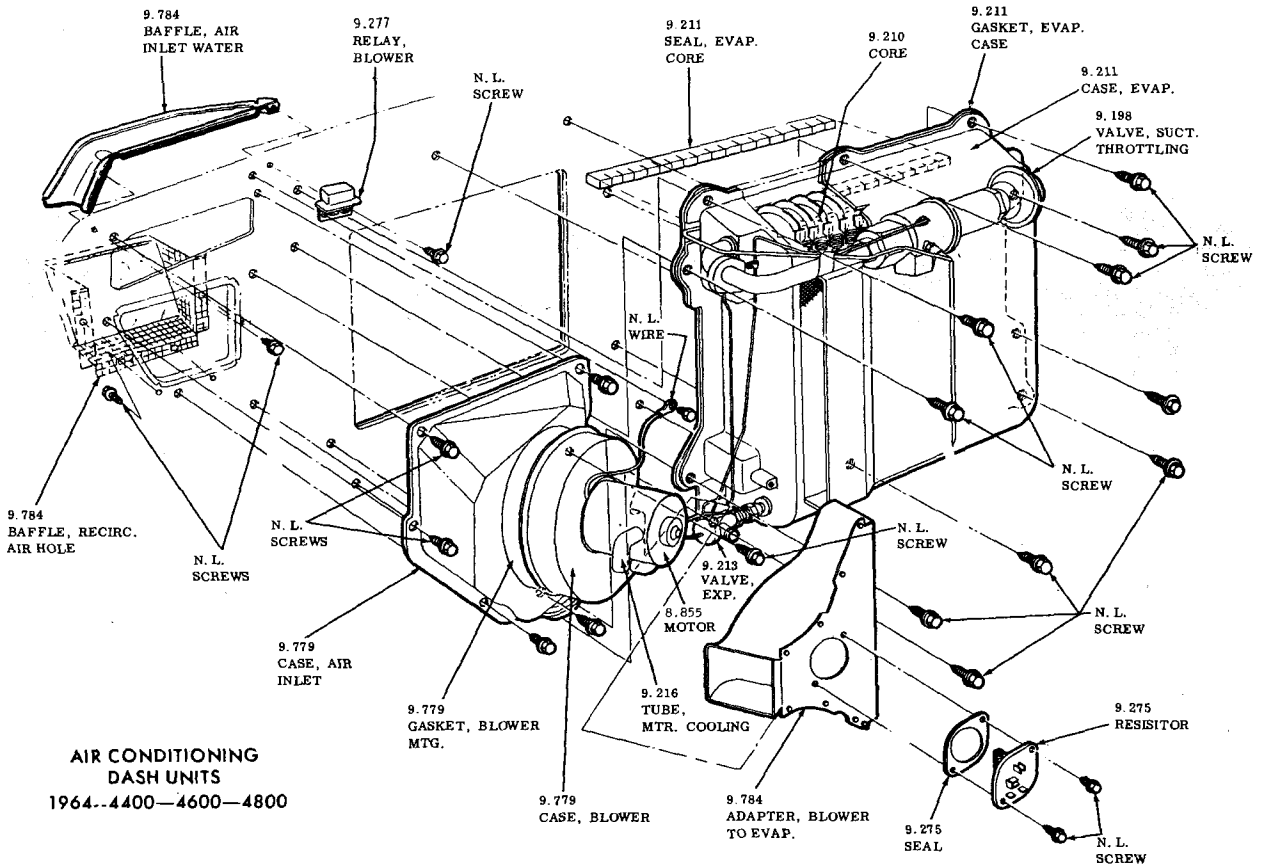

AIR CONDITIONING
DASH UNITS
1964--4400—4600—4800

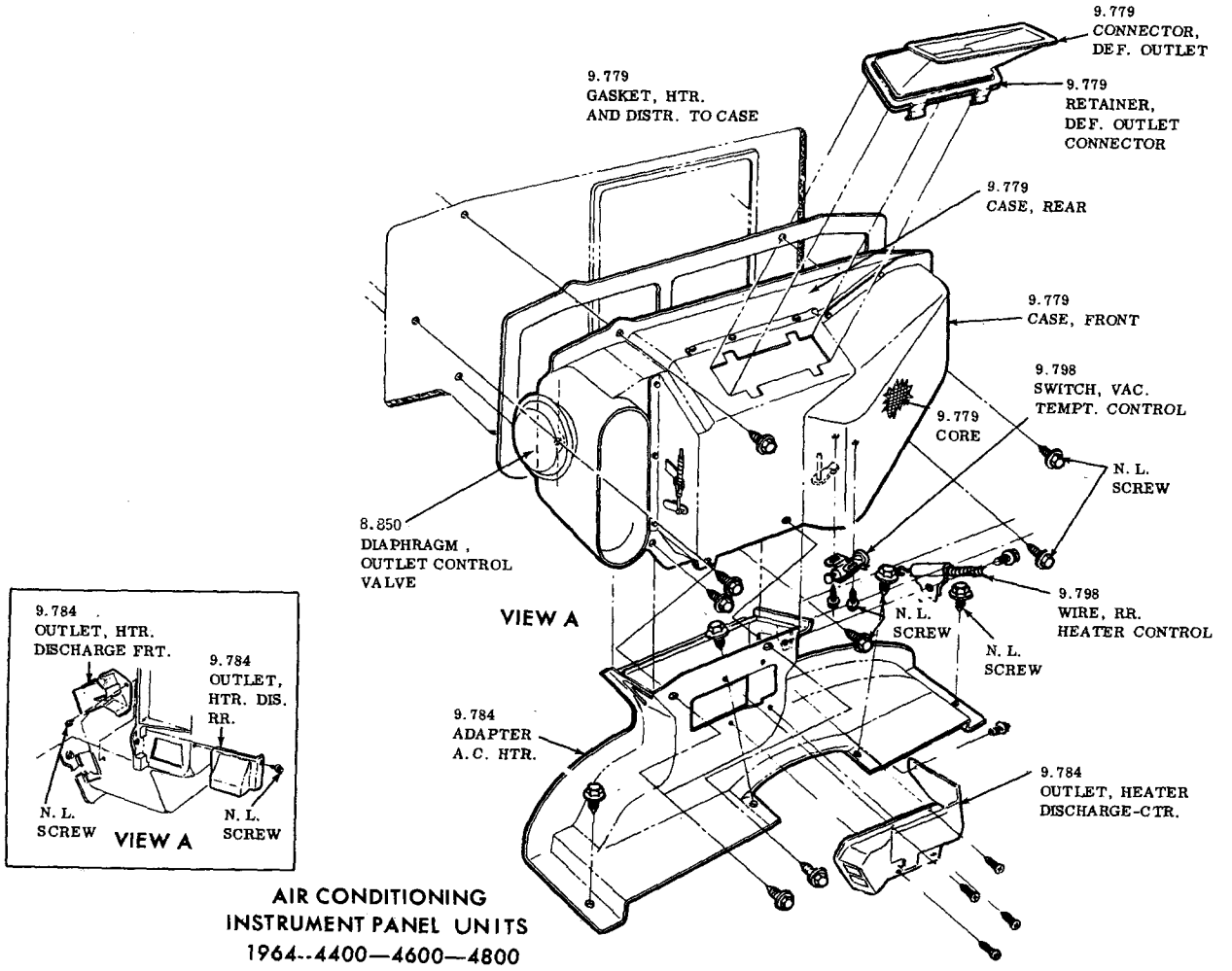

AIR CONDITIONING
INSTRUMENT PANEL UNITS
1964--4400—4600—4800

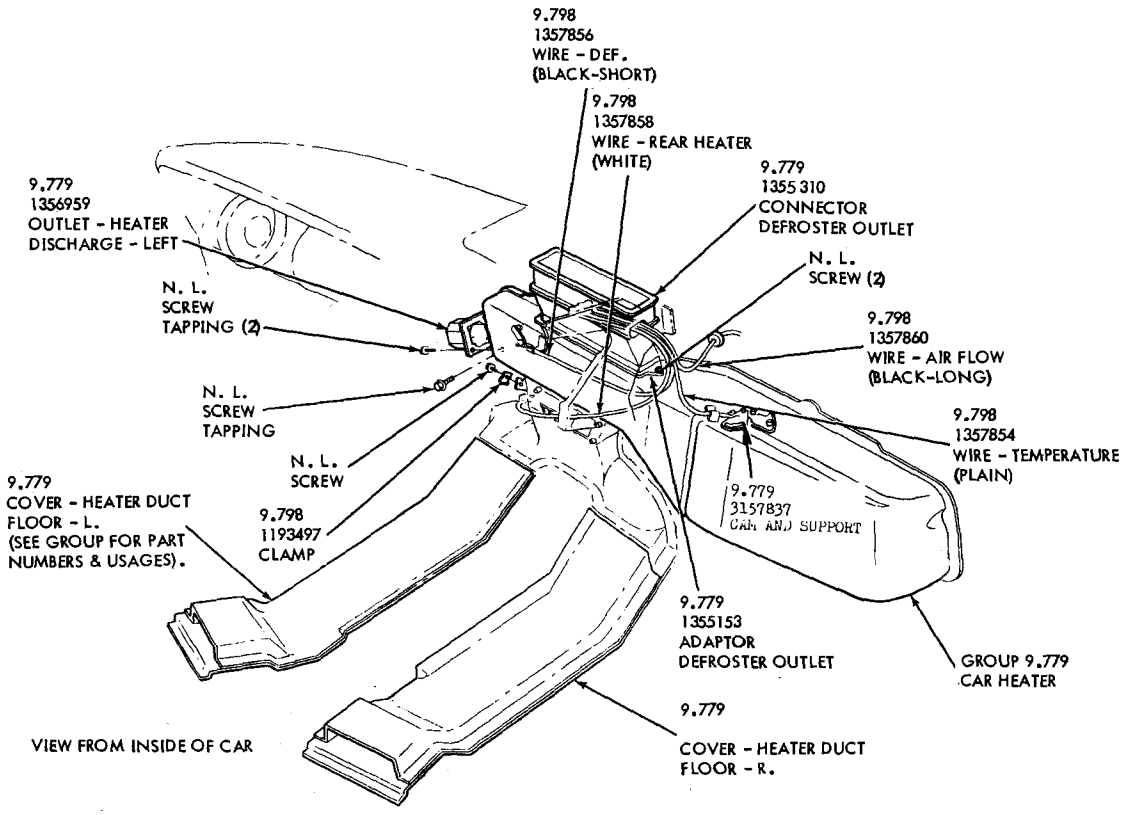

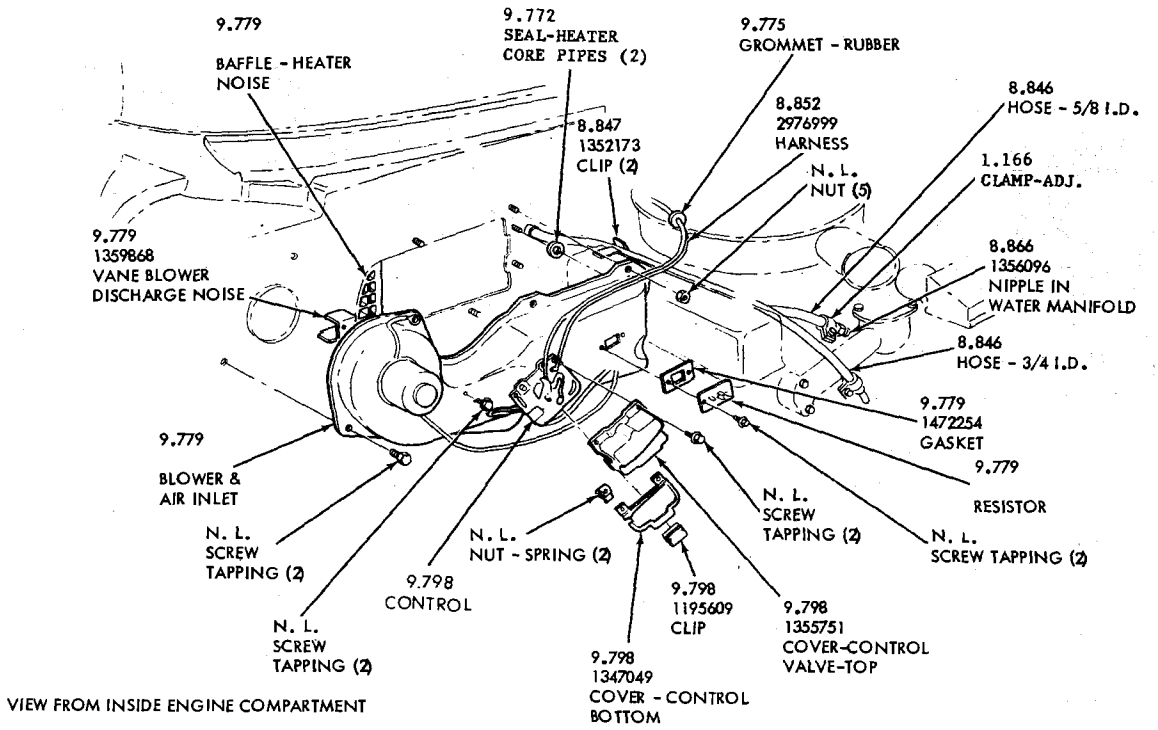

TYPICAL
1963—1964 HEATER & DEFROSTER
4400-4600-4800

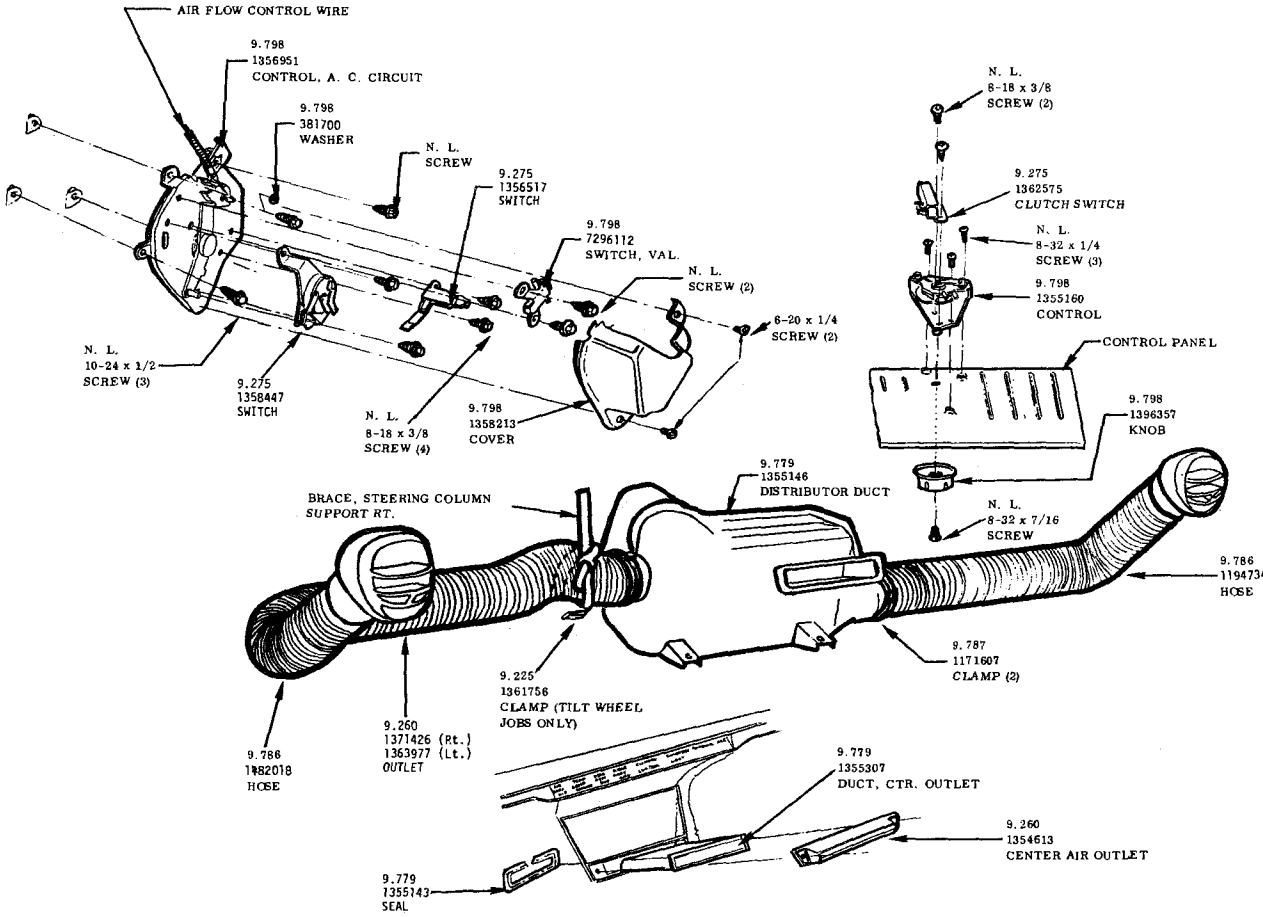

AIR CONDITIONING OUTLETS AND CONTROLS
1964—4400—4600—4800

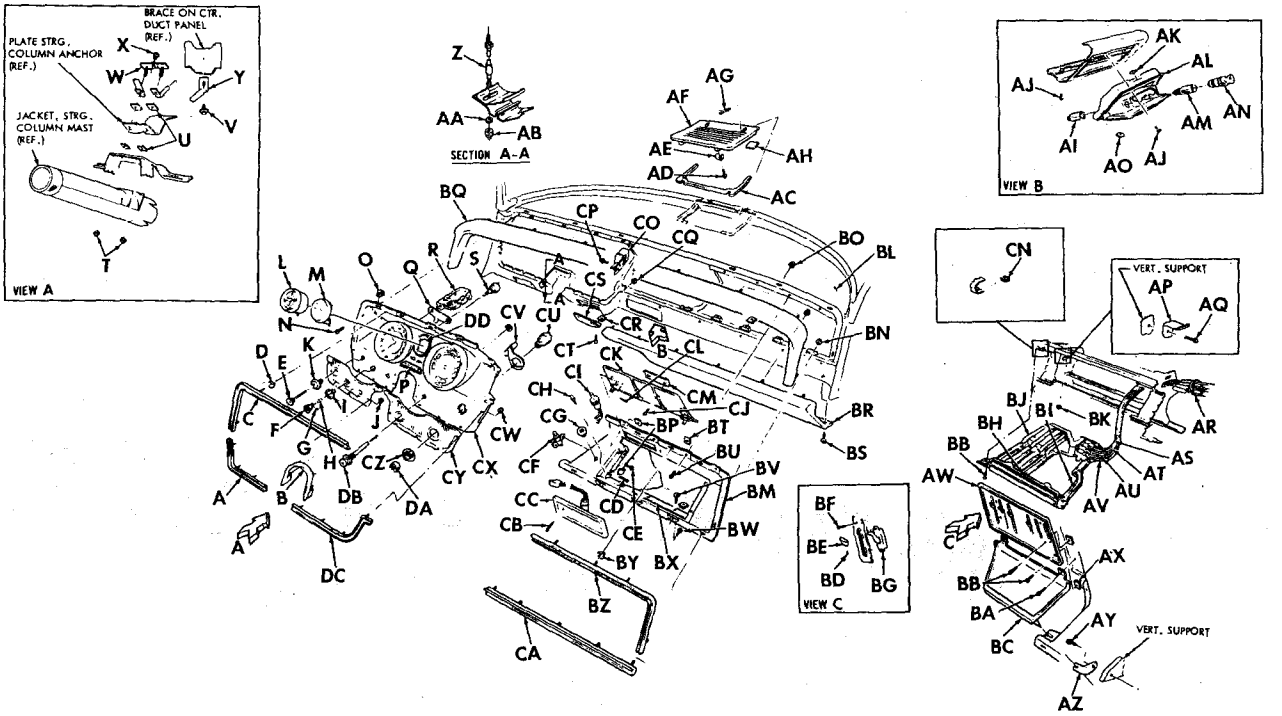

INSTRUMENT PANEL
1963-1964-4400 4600 4800

INSTRUMENT PANEL
1963—1964—4400-4600-4800

Key	Description	Part No.	Group
A	MOLDING, Lower Left	1355295	9.740
B	BEZEL, Steering Column	1356146-All Exc. 4400 3 Speed 1357661-4400 3 Speed	6.750
C	MOLDING, Upper Left	1355297	9.740
D	SNAP	1356502	9.740
E	KNOB, Light Switch		2.486
F	KNOB	1365623-4400-4600 1365624-4800	10.164
G	SCREW, Set 6-32 x .125	—	N.L.
H	BUTTON	1355598	10.164
I	ESCUTCHEON	1358910	10.166
J	NUT, Hex. Machine 6-32	—	N.L.
K	ESCUTCHEON, Switch	1355415	2.486
L	CLOCK		Acc. 9.772
M	MEDALLION (Omit when clock is specified)	1366270	9.740
N	SCREW, Pan Head #8-18 x 9/16		N.L.
O	CLIP	1356860	9.746
P	MONOGRAM, Transmission Shift Indicator Lens		4.038
Q	PLATE, Ground	1356763	2.486
R	SWITCH, Headlamp		2.485
S	SWITCH, Windshield Wiper	1998729-4400-4600 1993607-4800	10.163
T	NUT, 5/16-18	—	N.L.
U	SILENCER	—	N.L.
V	BOLT, Hex. Head 5/16-18 x .625	—	N.L.
W	BRACKET, Steering Column Mounting		6.750
X	SCREW, Hex. Washer Head 1/4-14 x .625	—	N.L.
Y	BRACE, Steering Column Support	1355298-RT. 1355299-LT.	
Z	SHAFT, Speedometer Trip Reset	6406856	9.761
AA	NUT, Shaft Retaining	1564075	9.761
AB	KNOB, Reset Stem	1569776	9.761
AC	GASKET, Instrument Panel Radio Speaker Grille	1355996	9.655
AD	SCREW, Hex. Head #8-18 x .375	—	N.L.
AE	CLIP, Grille Retainer	1356831	9.655
AF	GRILLE, Instrument Panel Radio	1354388	9.655
AG	SCREW, Oval Head #8-15 x .875	—	N.L.
AH	SILENCER, Grille Mounting	1362653	9.655
AI	RETAINER, Cigar Lighter	3771764	9.712
AJ	SCREW, Pan Head 10-16 x .625	—	N.L.
AK	HOOD, Ash Tray Light	1356231	9.766
AL	ASH TRAY, Instrument Panel	See Group	9.766
AM	BARE AND FUSE	1350625	9.709
AN	ELEMENT AND KNOB	1355507	9.709
AO	NUT, Anchor #10-12 x .300	—	N.L.
AP	BRACKET, Heater and Defroster Control Mounting	1355819	9.798
AQ	SCREW, Hex. Head #10-16 x .375	—	N.L.
AR	CLAMP, Hose	1185159	9.242
AS	WIRE, Air Control (Black-Long)		9.798
AT	WIRE, Temperature Control (Plain)		9.798
AU	WIRE, Defroster Control (Black-Short)		9.798
AV	WIRE, Rear Heater Control (White)		9.798
AW	PANEL, Control and Accessory Switch Mounting	1354328	9.740
AX	NUT, Anchor #8-15 x .310	—	N.L.
AY	SCREW, Hex. Hd. #10-16 x .375	—	N.L.
AZ	SUPPORT, Trim Plate	1356844-RT. 1356845-LT.	9.740
BA	SCREW, Pan Head #8-32 x .500	—	N.L.
BB	SCREW, Oval Head #8-15 x .625	—	N.L.
BC	PLATE, Trim	1354547	9.740
BD	SCREW, Hex. Socket Set #6-32 x .187	—	N.L.
BE	KNOB	1361624	9.798
BF	SCREW, Oval Head #6-32 x .312	—	N.L.
BG	SWITCH, Courtesy Light	1358959	2.773
BH	LENS	1366087	9.740
BI	BRACKET	1355478	9.740
BJ	CONTROL	1354497	9.798
BK	NUT, Hex. Flange #10-24	—	N.L.
BL	PANEL, Instrument	See Group	10.230
BM	PANEL, Instrument Center Right	See Group	10.230
BN	NUT, Stamped 1/8	—	N.L.
BO	NUT, Hex. Lock #8-32	—	N.L.
BP	NUT, Anchor #8-15 x .310		
BQ	EXTENSION, Cover	See Group	14.655
BR	COVER, Instrument Panel Lower	See Group	14.655
BS	SCREW, Hex. Head #8-18 x .750	—	N.L.
BT	CLIP	1356860	9.746
BU	SCREW, Pan Head #8-18 x .562	—	N.L.
BV	SCREW, Round Head Cross Recess Tapping	—	N.L.
BW	SCREW, Hex. Hd. #8-32 x .312	—	N.L.
BX	BOX, Instrument Panel	See Group	10.260
BY	SNAP	1356502	9.740
BZ	MOLDING, Upper Right	1355296	9.740
CA	MOLDING, Lower Right	1355294	9.740
CB	SCREW, Oval Head #8-18 x .625	—	N.L.
CC	LAMP, Courtesy	1357126	2.774
CD	SCREW, Oval Head #8-15 x .437	—	N.L.
CE	SCREW, Pan Head #6-32 x .375	—	N.L.
CF	LOCK, Instrument Panel Compartment Door	1380871	10.266
CG	ESCUTCHEON, Lock	1356651	10.267
CH	BUMPER	1361808	10.263
CI	SWITCH		10.275
CJ	SCREW, Flat Head #6-32 x .187	—	N.L.
CK	DOOR		10.261
CL	SCREW, Flat Head #8-32 x .375	—	N.L.
CM	MONOGRAM, Instrument Panel	See Group	10.256
CN	NUT, Anchor #8-15 x .310	—	N.L.
CO	BAZZER, Speed Safety		9.762
CP	SCREW, Hex. Head #10-16 x .500	—	N.L.
CQ	NUT, External Lock #8-32	—	N.L.
CR	NUT, Anchor #8-15 x .280	—	N.L.
CS	DOOR, Instrument Panel Access	See Group	10.230
CT	SCREW, Oval Head #8-15 x .625	—	N.L.
CU	SWITCH, Ignition		2.189
CV	HOOD, Lamp	1356677	9.740
CW	NUT, Stamped 1/8	—	N.L.
CX	CLUSTER, Instrument	See Group	9.746
CY	PANEL, Trim (Wildcat Only)		9.740
CZ	ESCUTCHEON, Ignition Switch	1359653	2.189
DA	NUT, Ignition Lock Repairing		9.798
DB	KNOB, Control and Wire	1355168-RT. 1355169-LT.	9.798
DC	MOLDING, Lower Center	1355291	9.740
DD	RETAINER, Clock Spring	6406259	9.772

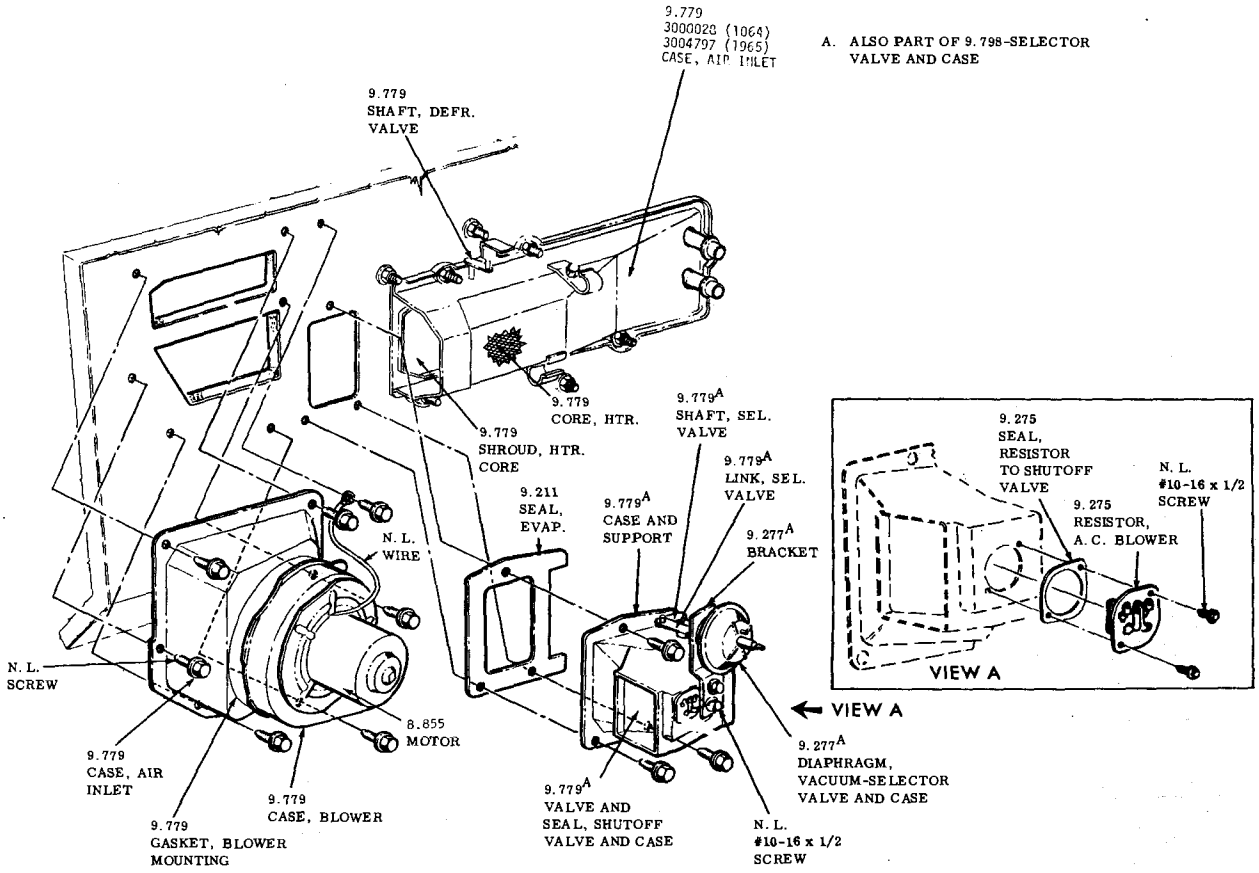

AIR CONDITIONING--DASH UNITS

1964-1965 RIVIERA

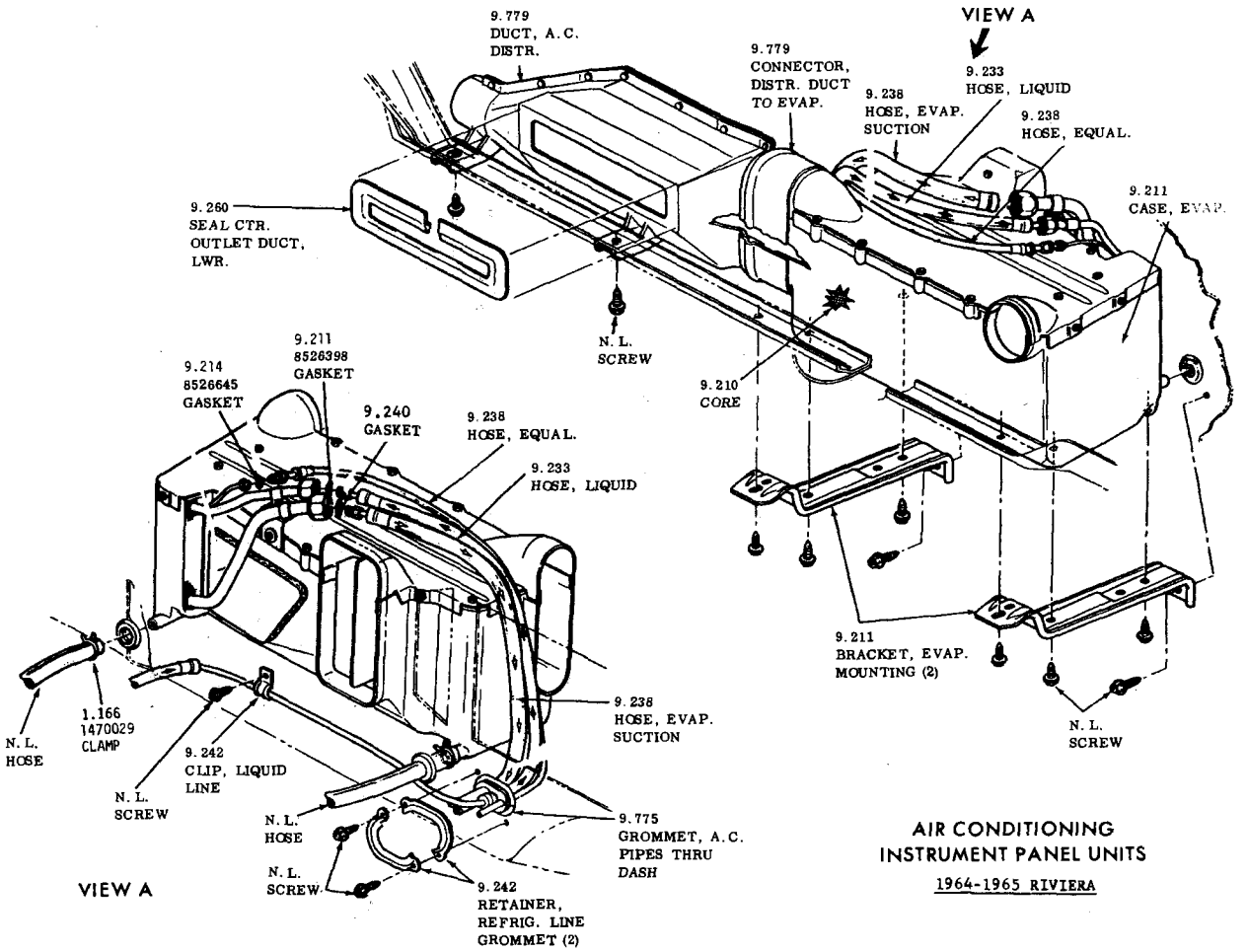

AIR CONDITIONING
INSTRUMENT PANEL UNITS

1964-1965 RIVIERA

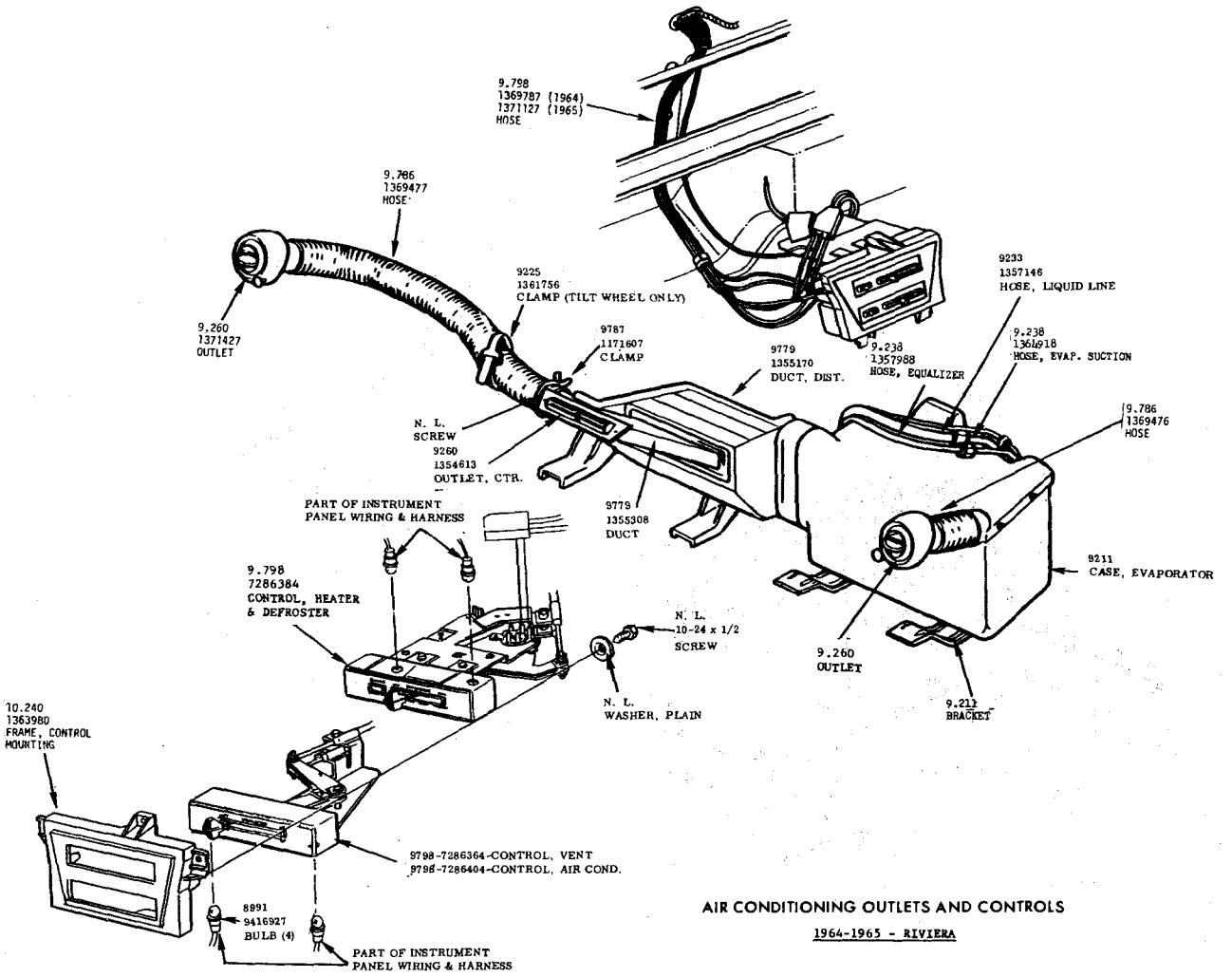

AIR CONDITIONING OUTLETS AND CONTROLS

1964-1965 - RIVIERA

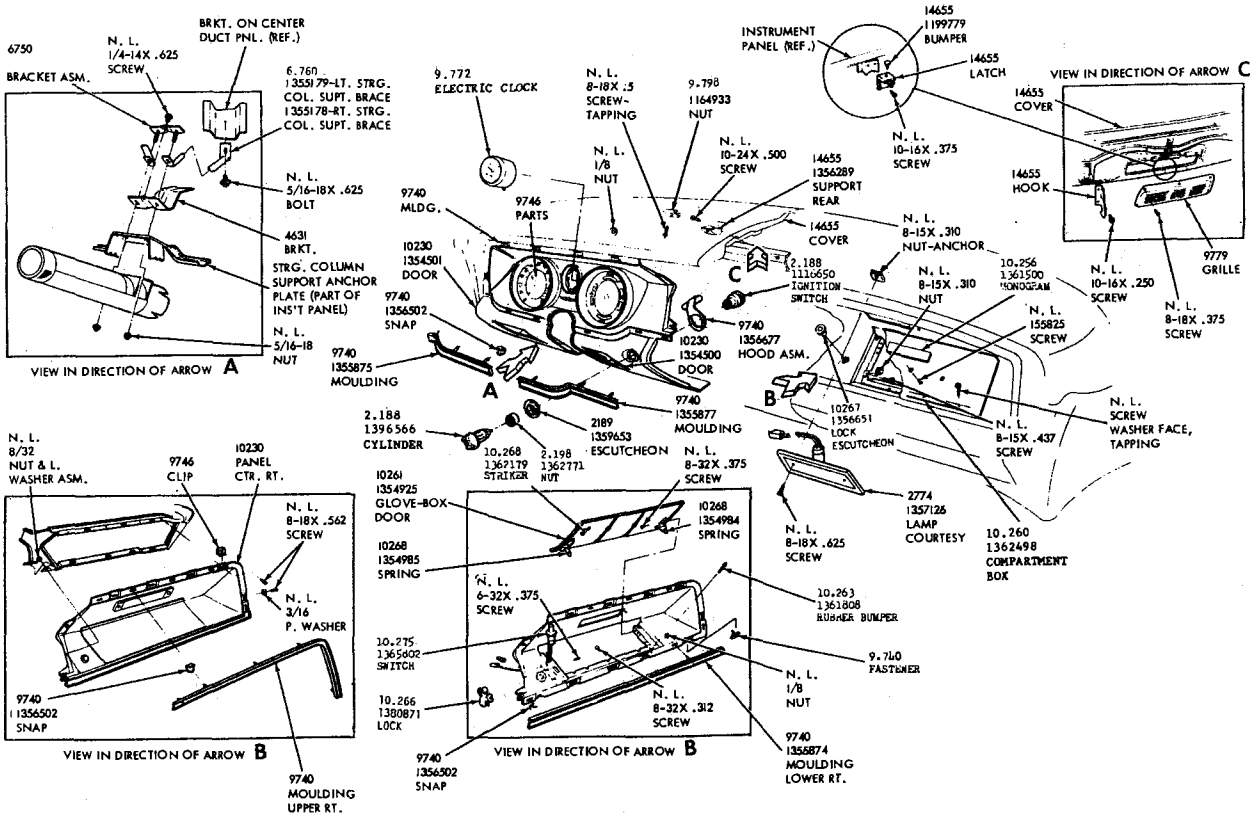

INSTRUMENT PANEL
1964-4747

INSTRUMENT PANEL TRIM 1964 — 4600-4700-4800

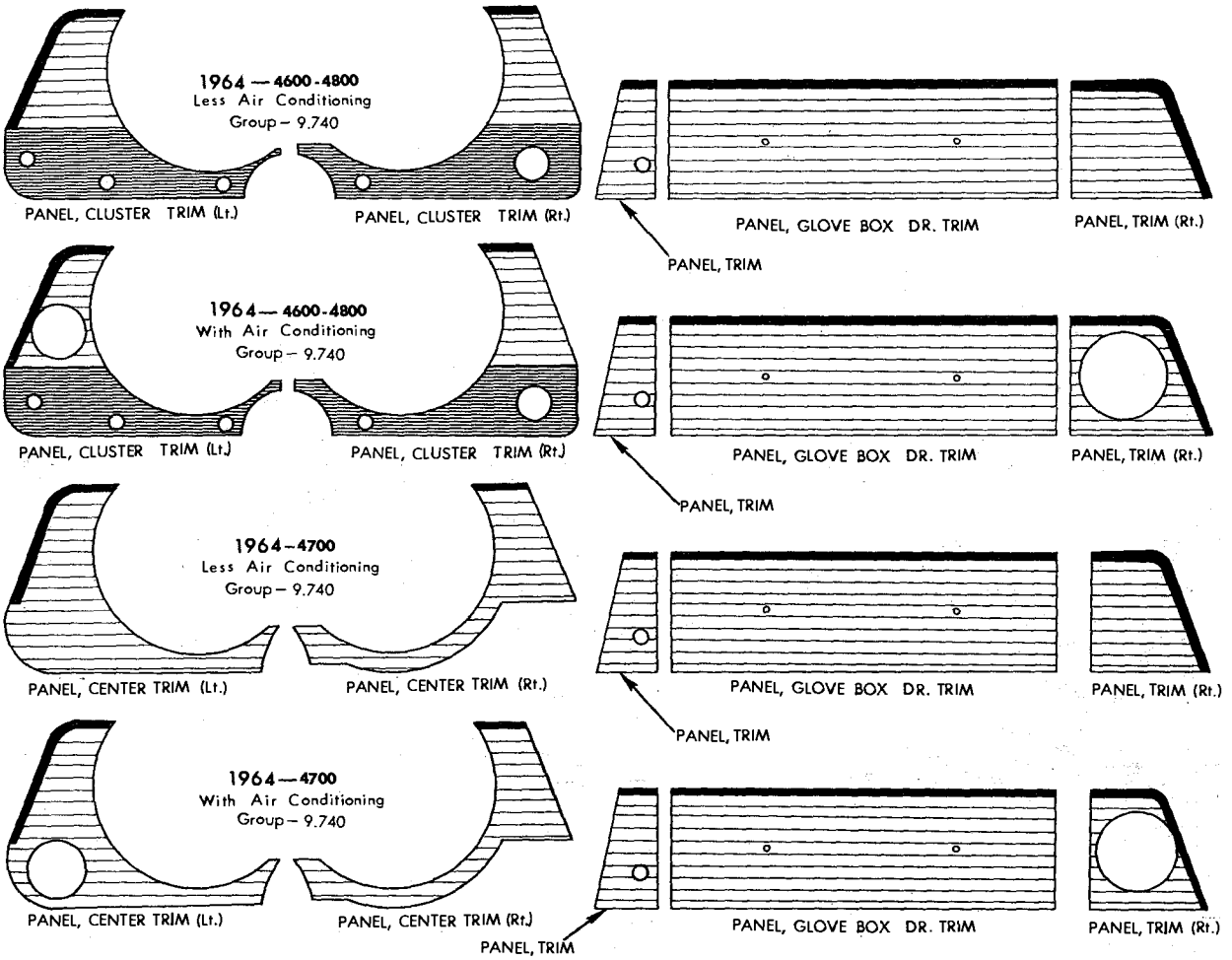

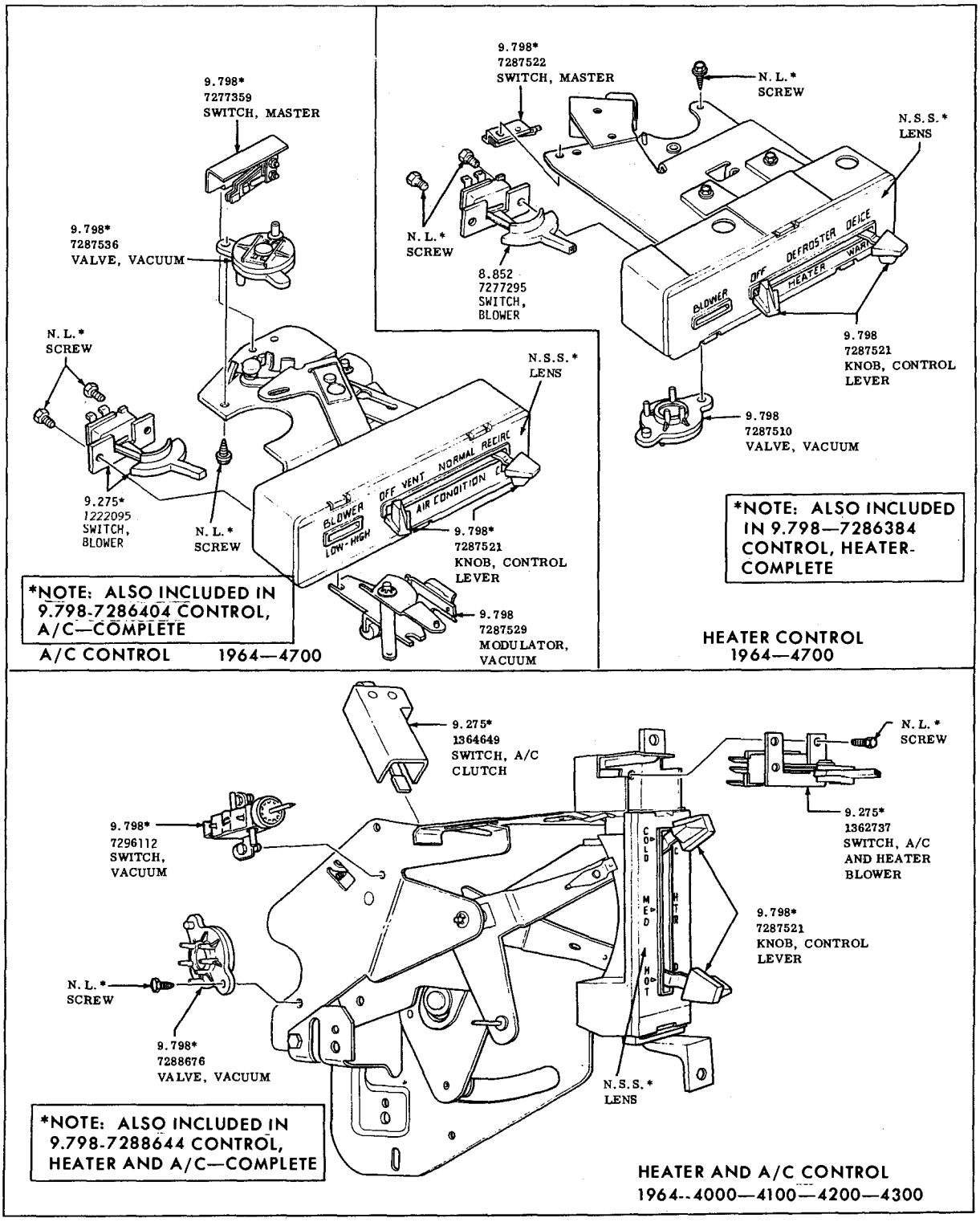

1964 HEATER AND A/C CONTROLS

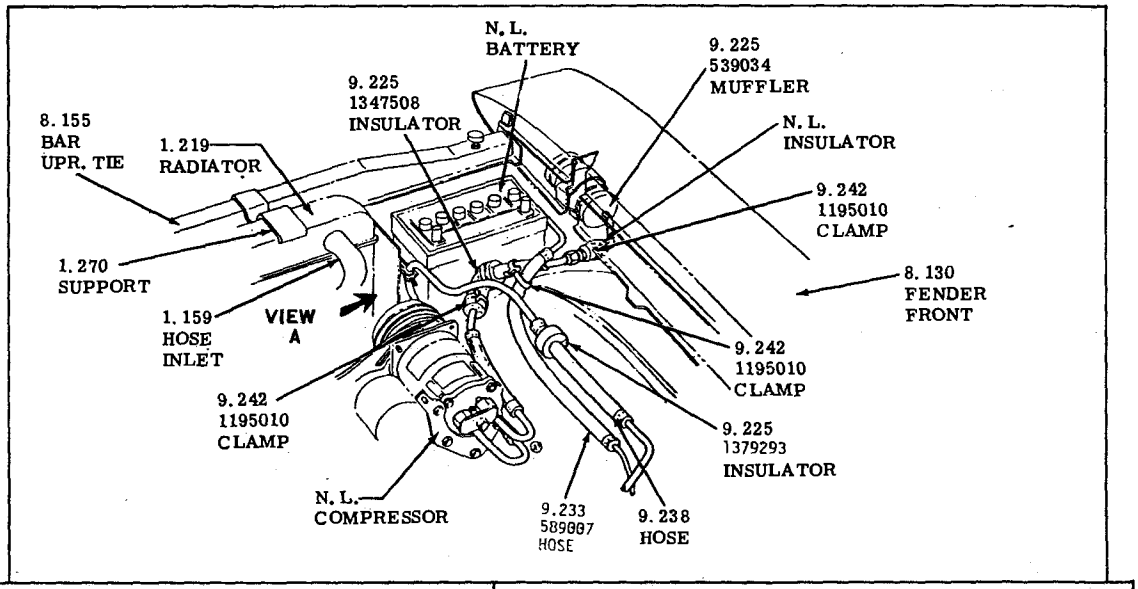

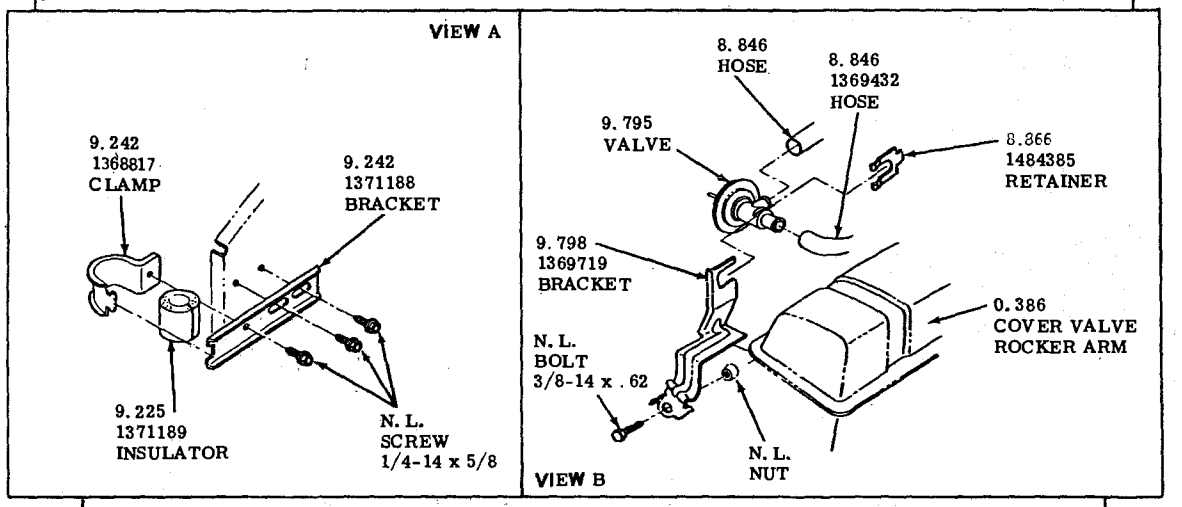

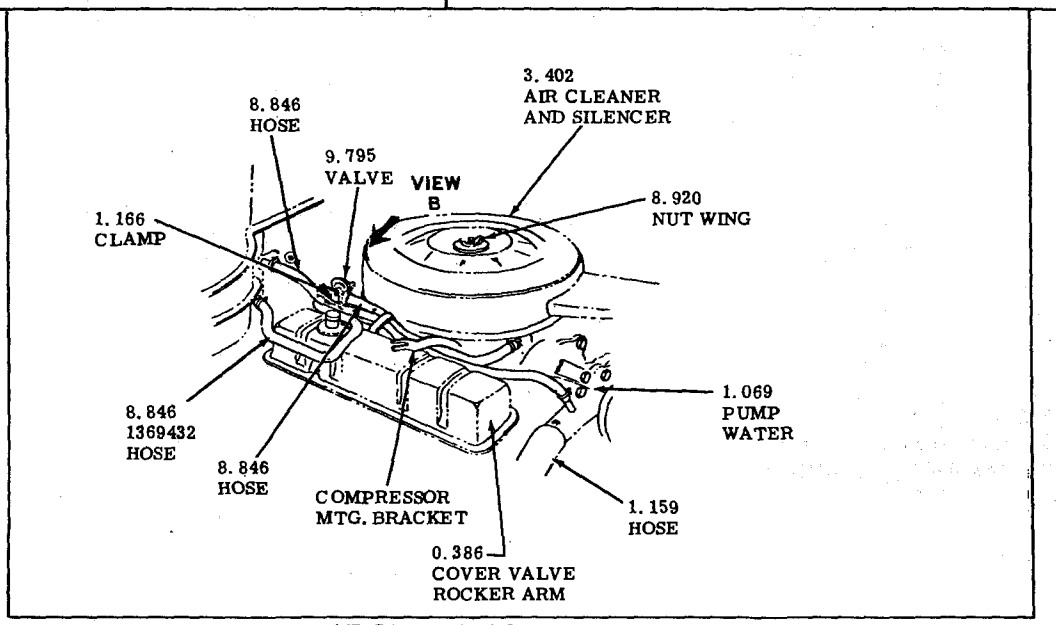

AIR CONDITIONING ENGINE COMP. UNITS
1965-SPECIAL-SKYLARK

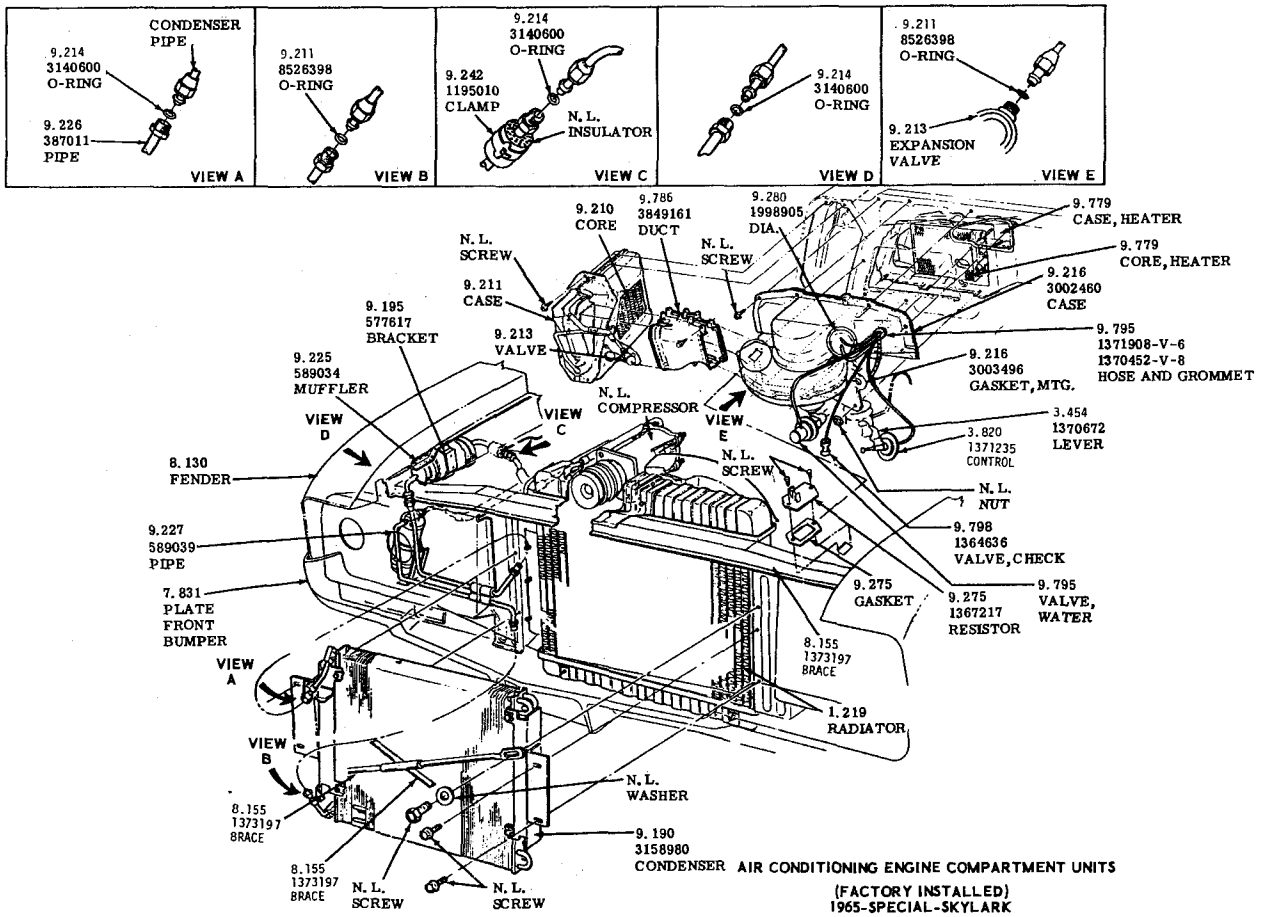

AIR CONDITIONING ENGINE COMPARTMENT UNITS
(FACTORY INSTALLED)
1965-SPECIAL-SKYLARK

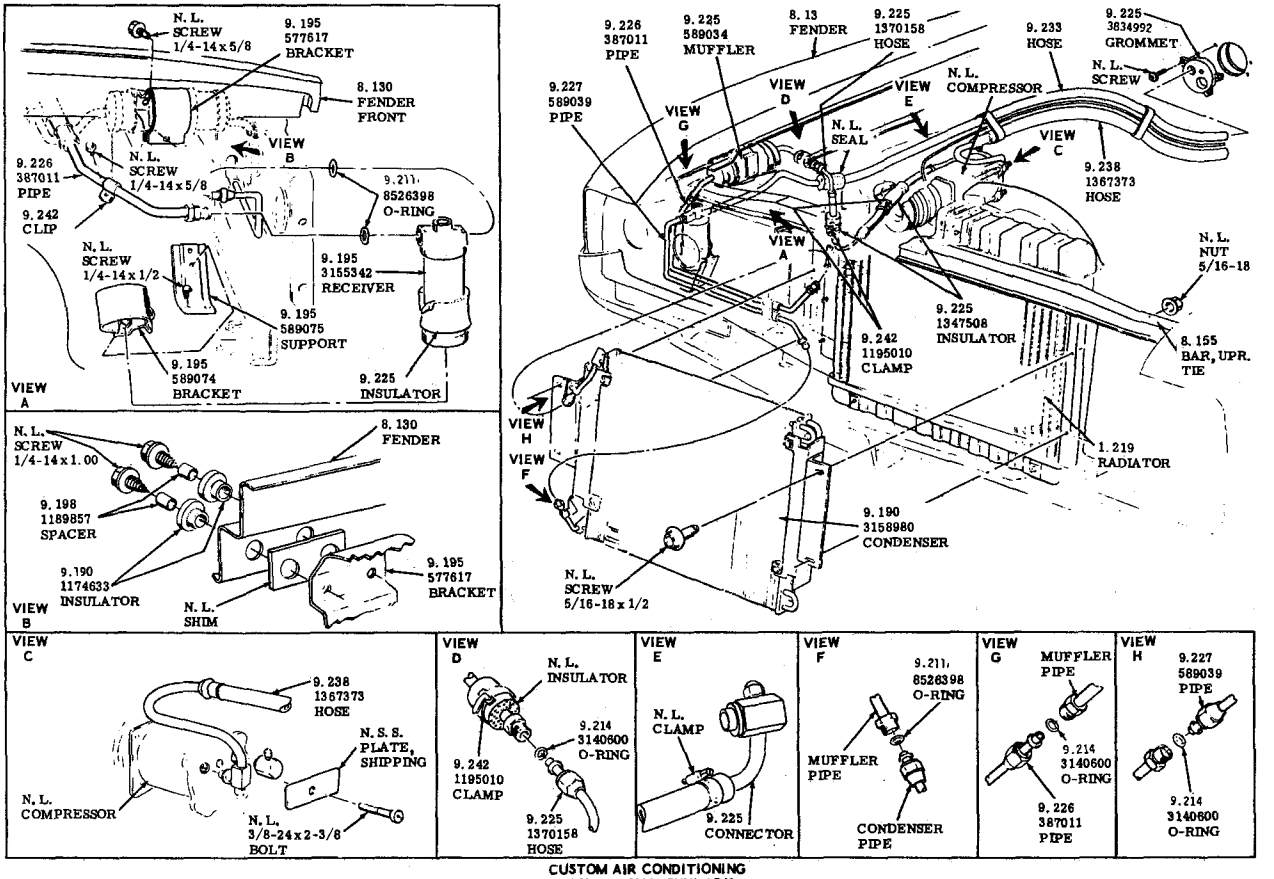

CUSTOM AIR CONDITIONING
1965-SPECIAL-SKYLARK

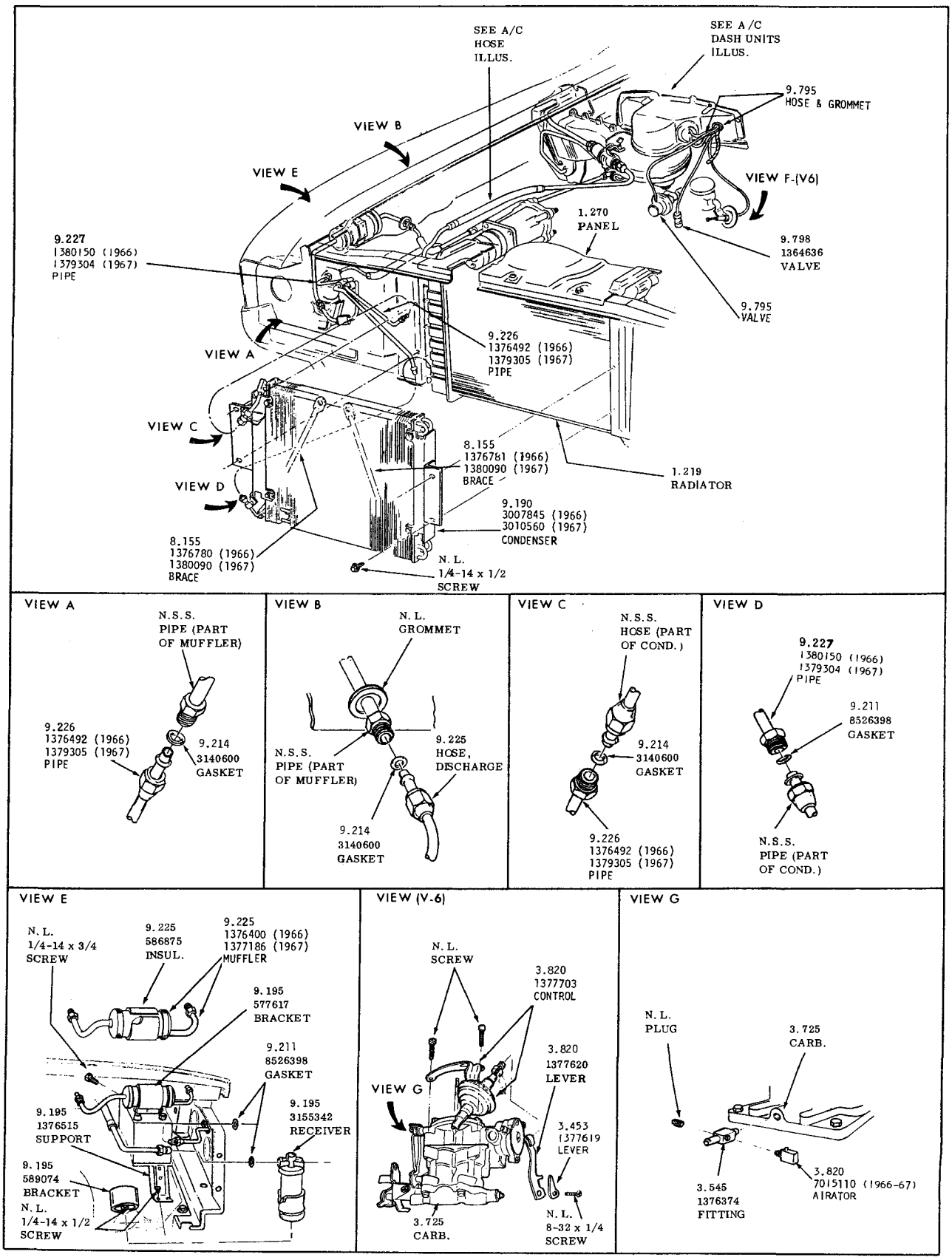

AIR CONDITIONING ENGINE UNITS

1965-1967 - SPECIAL - SKYLARK - SKYLARK GRAN SPORT

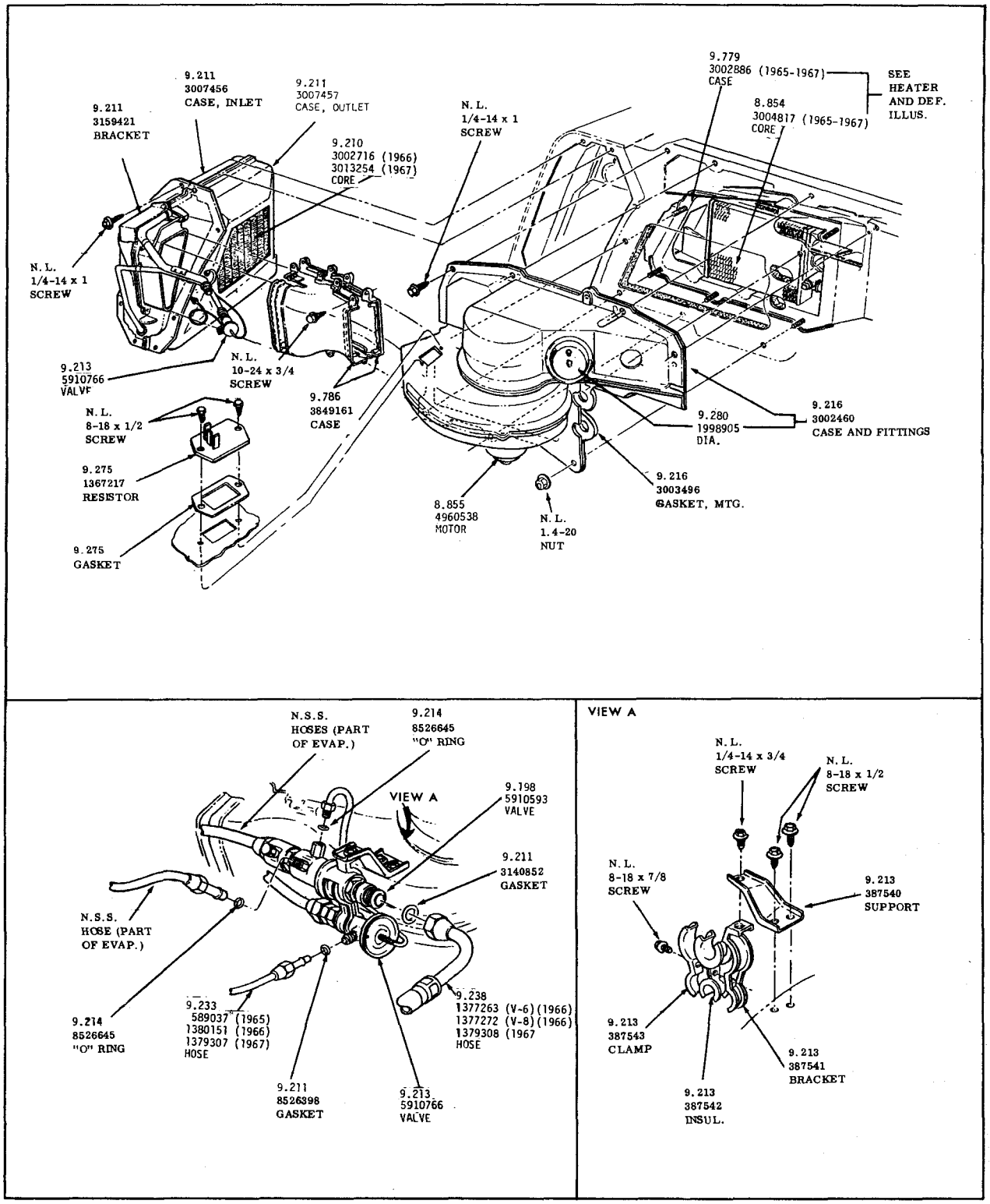

AIR CONDITIONING DASH UNITS AND
SUCTION THROTTLING VALVE
1965-1967 - SPECIAL - SKYLARK - SKYLARK GRAN SPORT

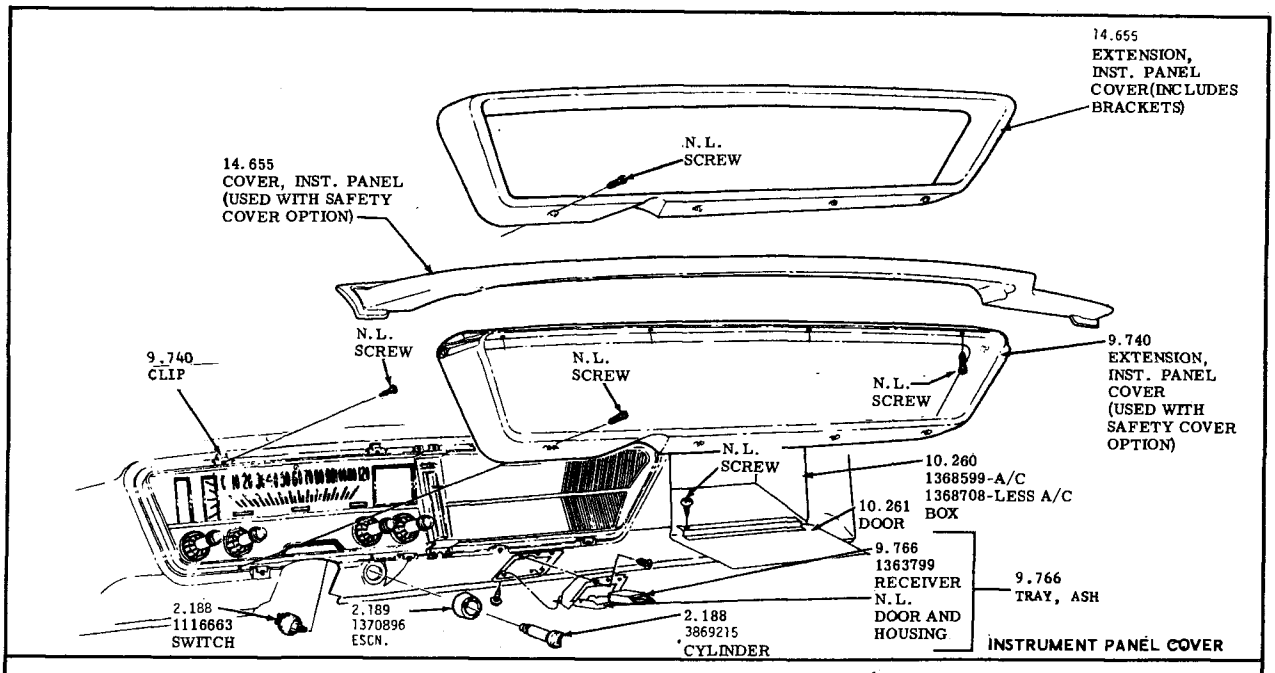

INSTRUMENT PANEL COVER

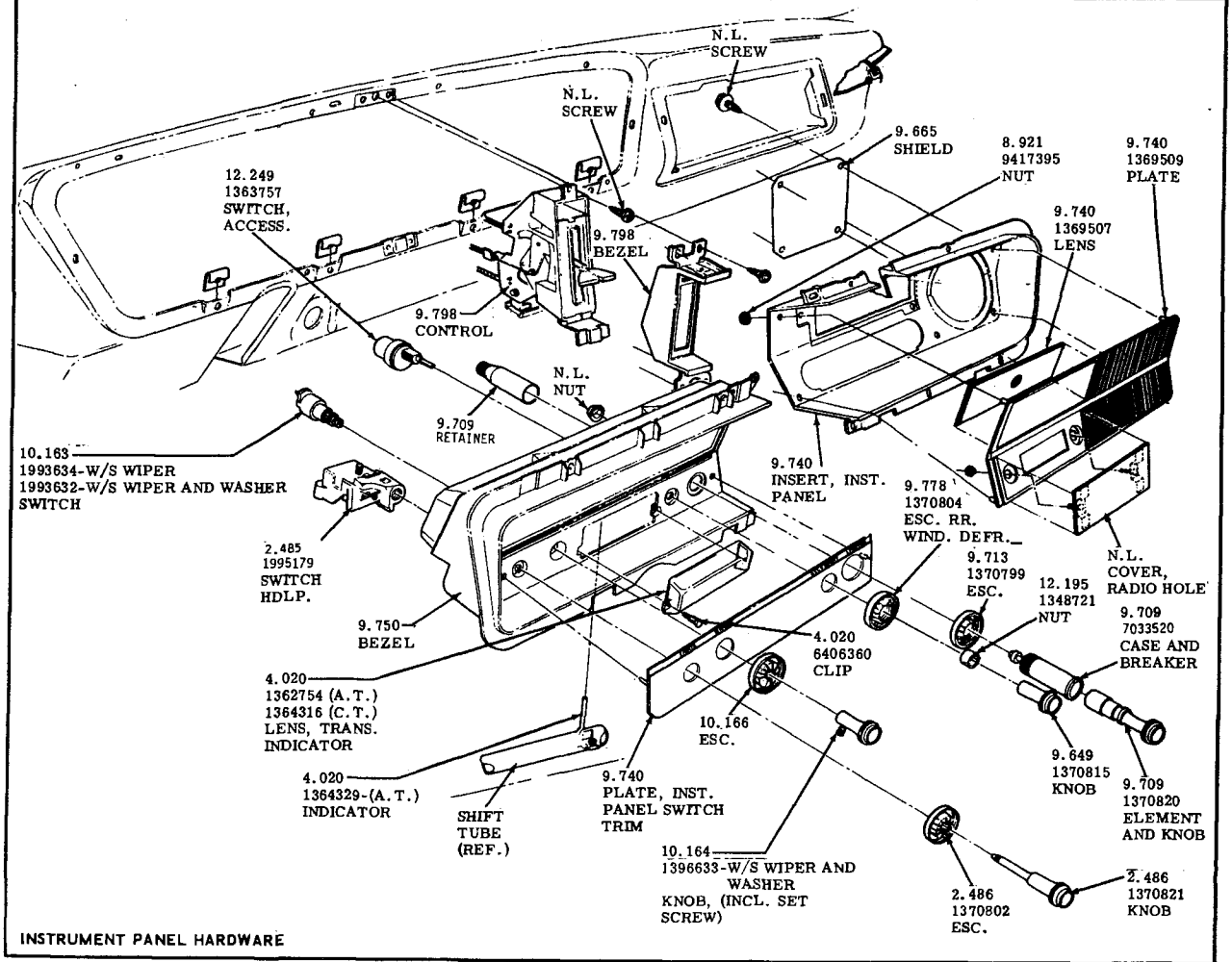

INSTRUMENT PANEL HARDWARE

INSTRUMENT PANEL
1965 - SPECIAL-SKYLARK

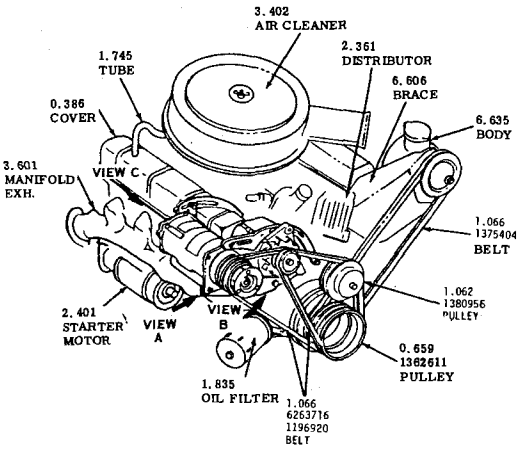

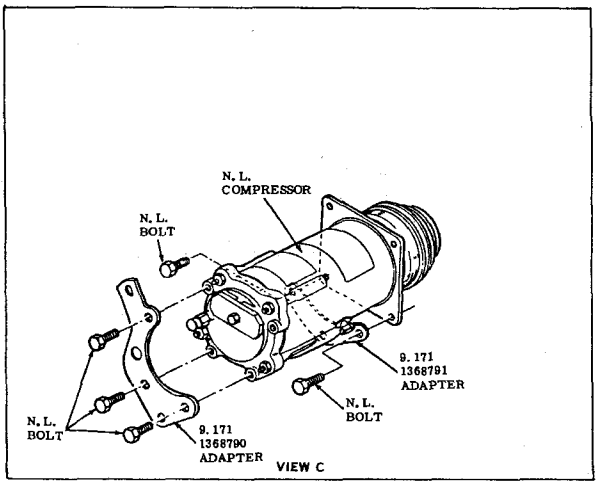

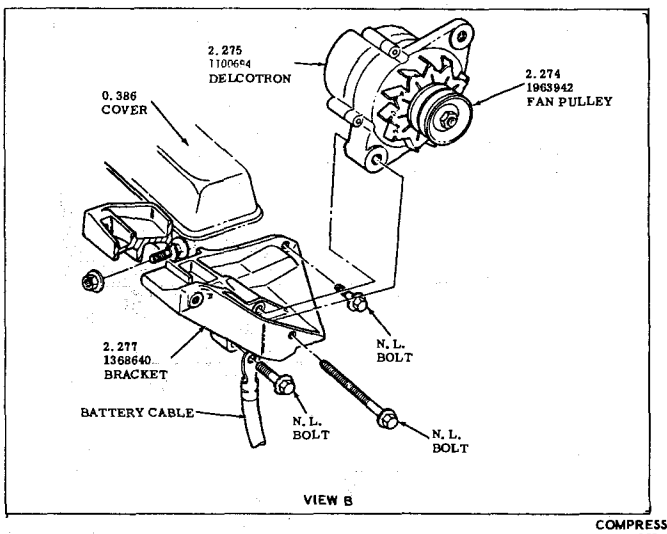

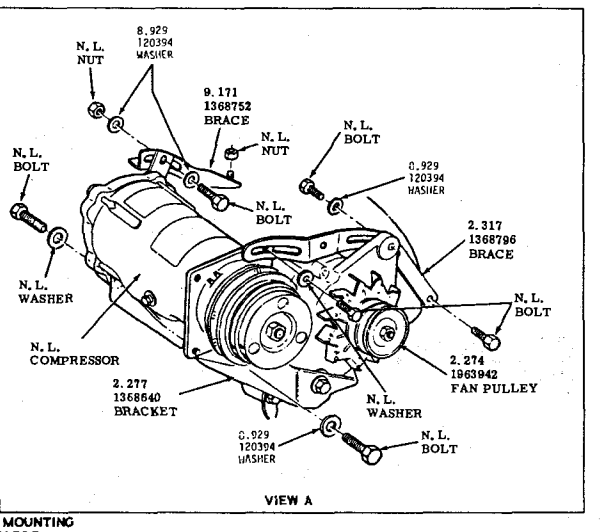

COMPRESSOR MOUNTING
1965-LESABRE

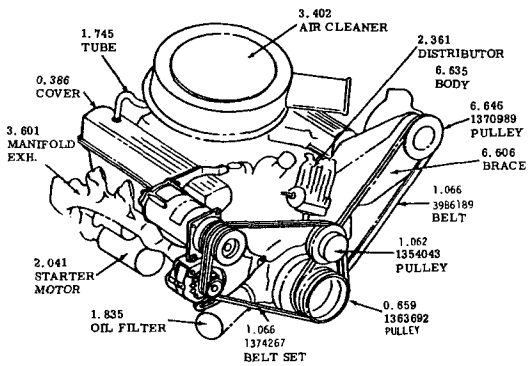

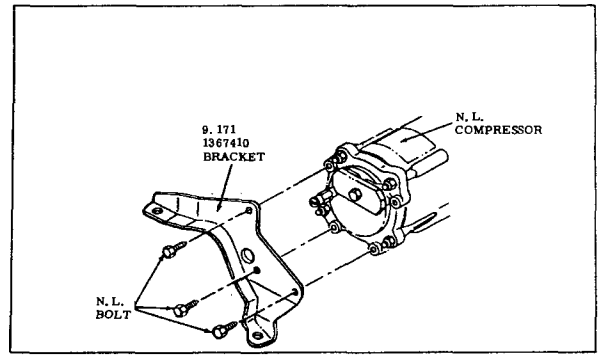

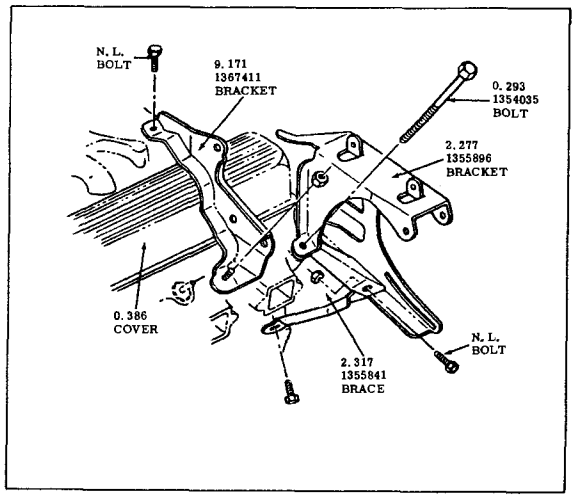

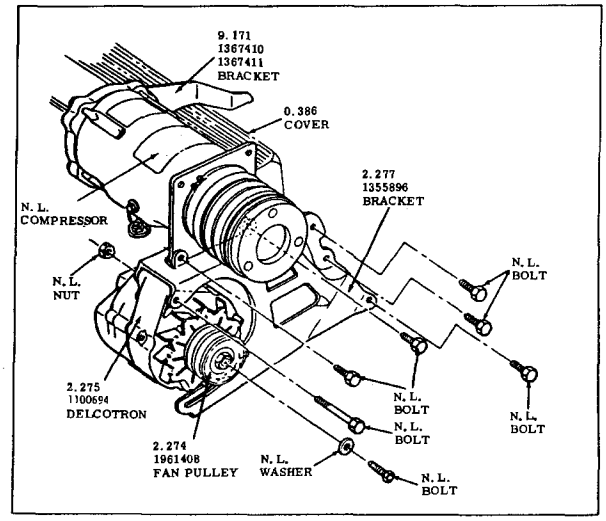

COMPRESSOR MOUNTING
1965 - WILDCAT-ELECTRA 225

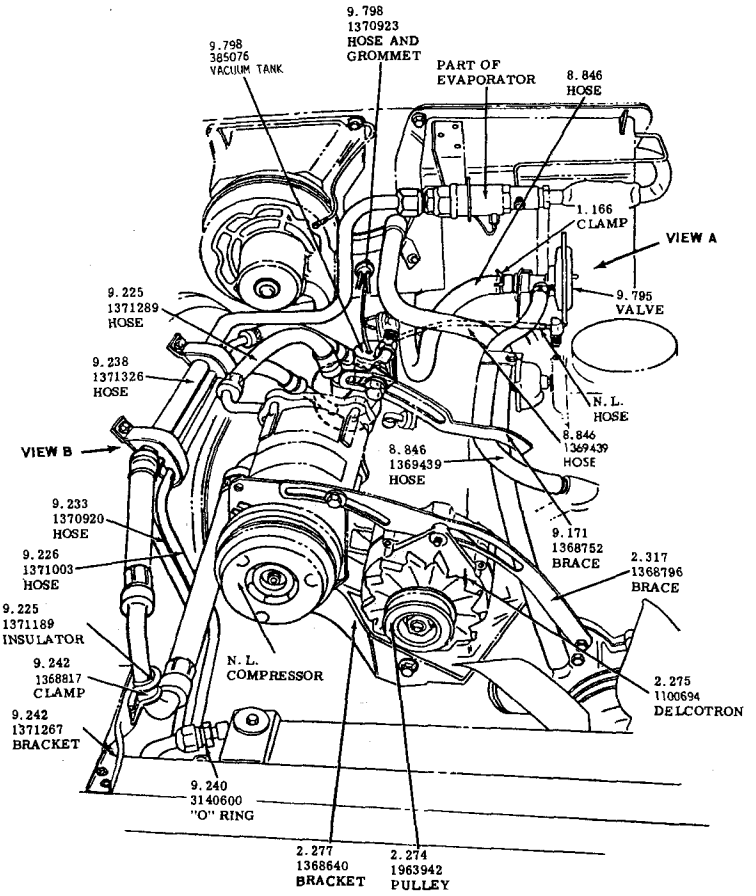

AIR CONDITIONING HOSES
1965 - LESABRE

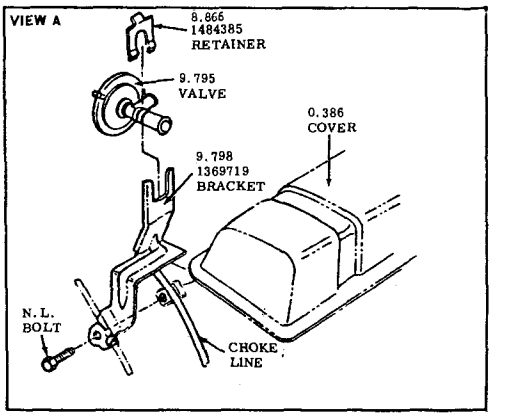

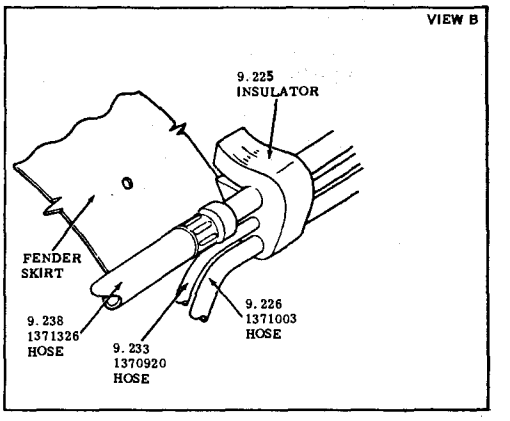

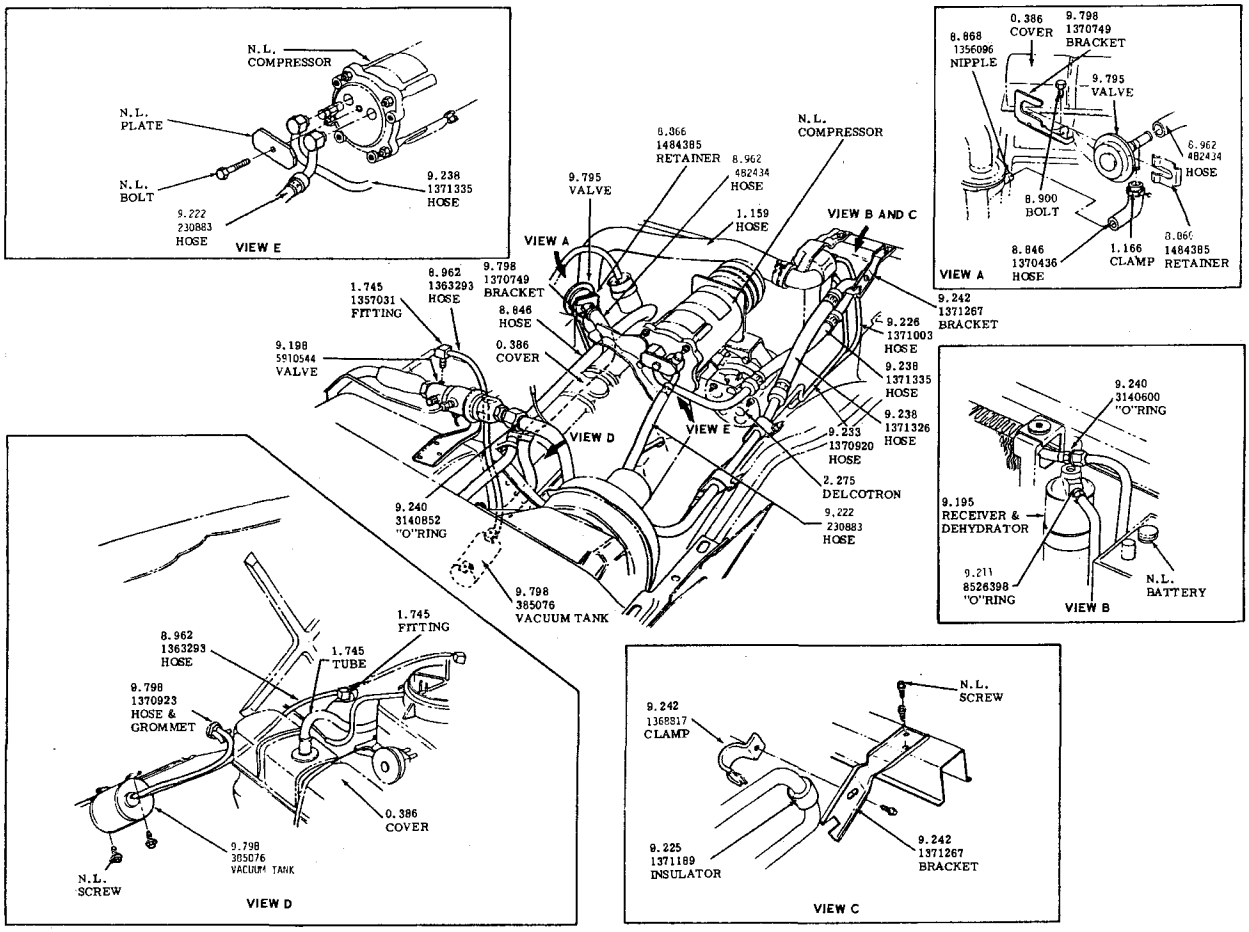

AIR CONDITIONING ENGINE COMPARTMENT UNITS
1965 LESABRE-WILDCAT-ELECTRA 225

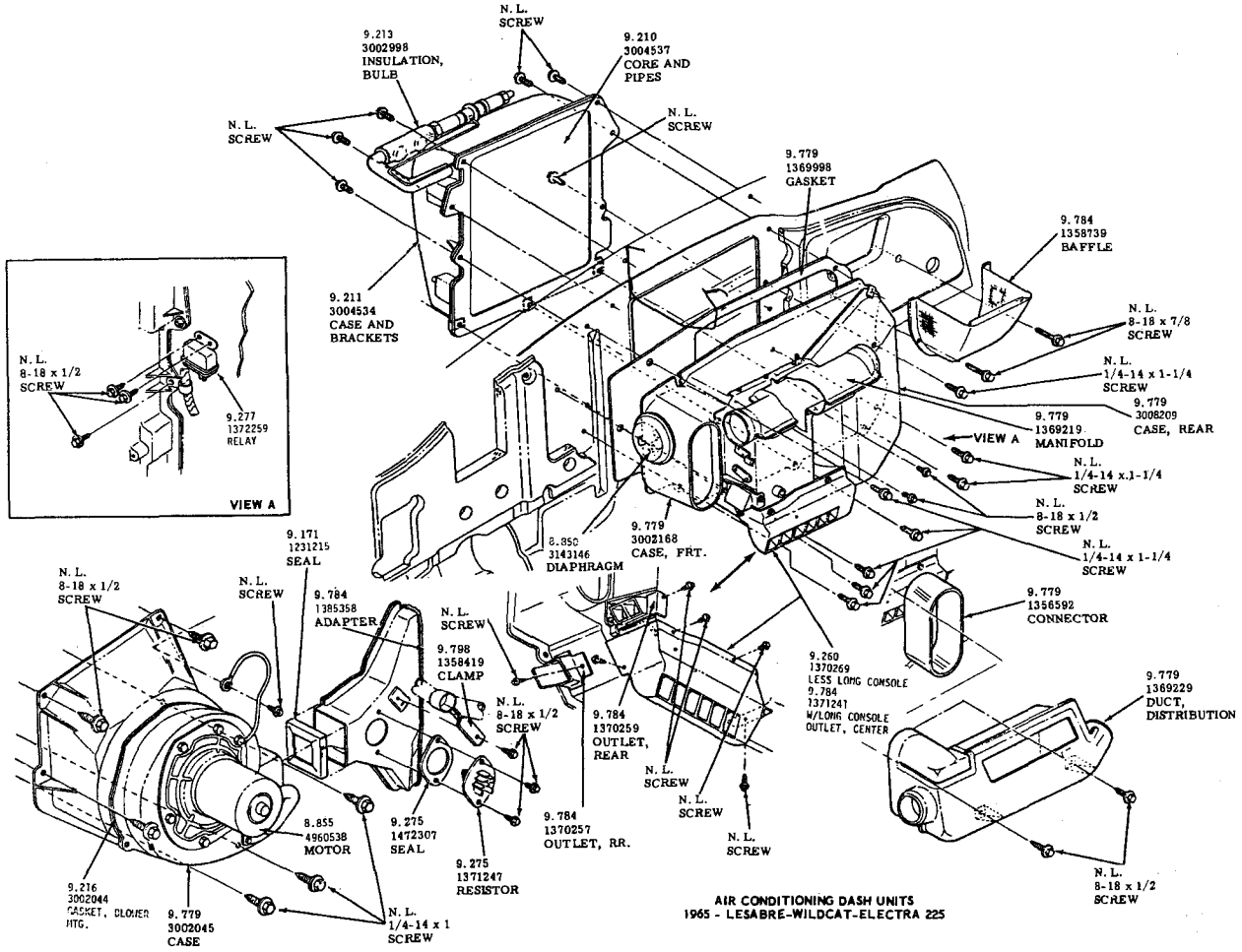

AIR CONDITIONING DASH UNITS
1965 - LESABRE-WILDCAT-ELECTRA 225

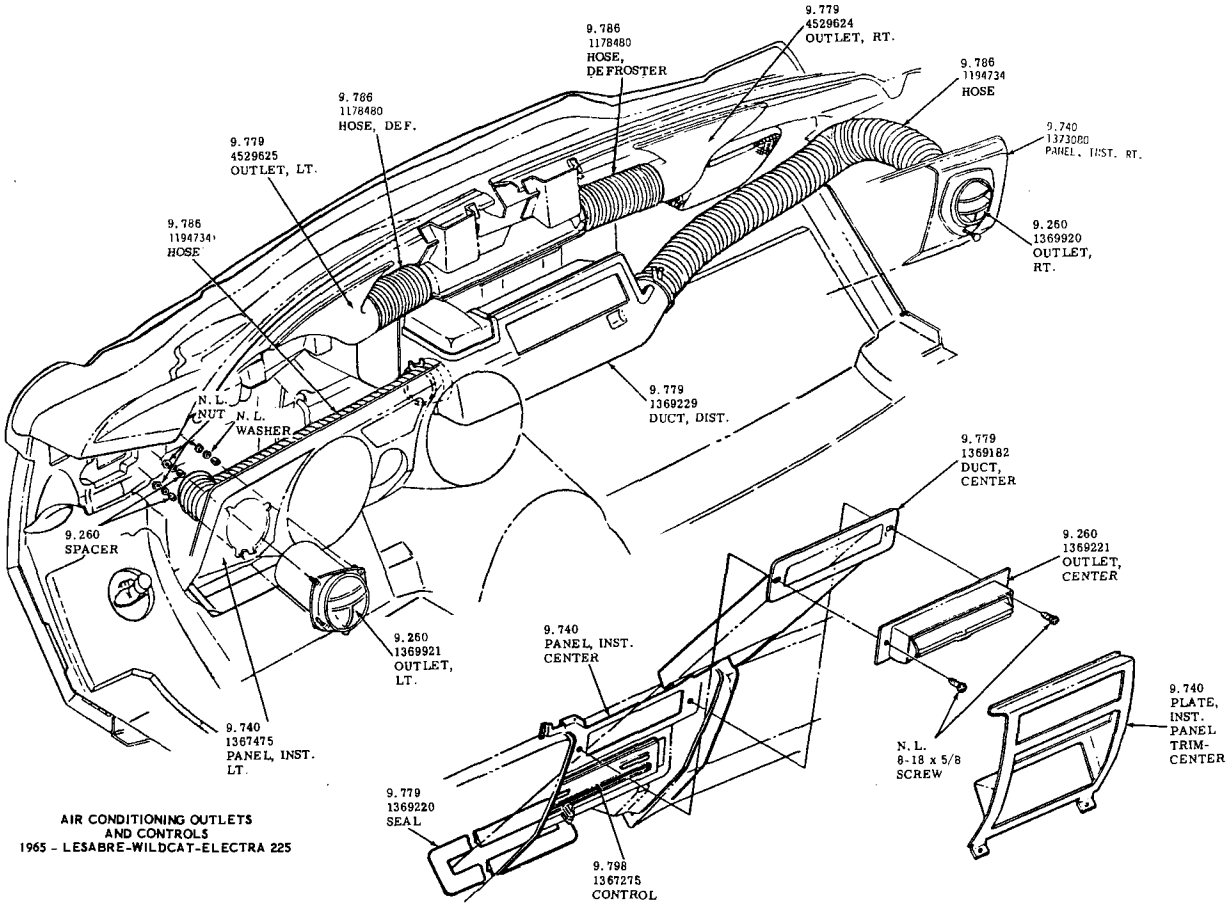

AIR CONDITIONING OUTLETS
AND CONTROLS
1965 - LESABRE-WILDCAT-ELECTRA 225

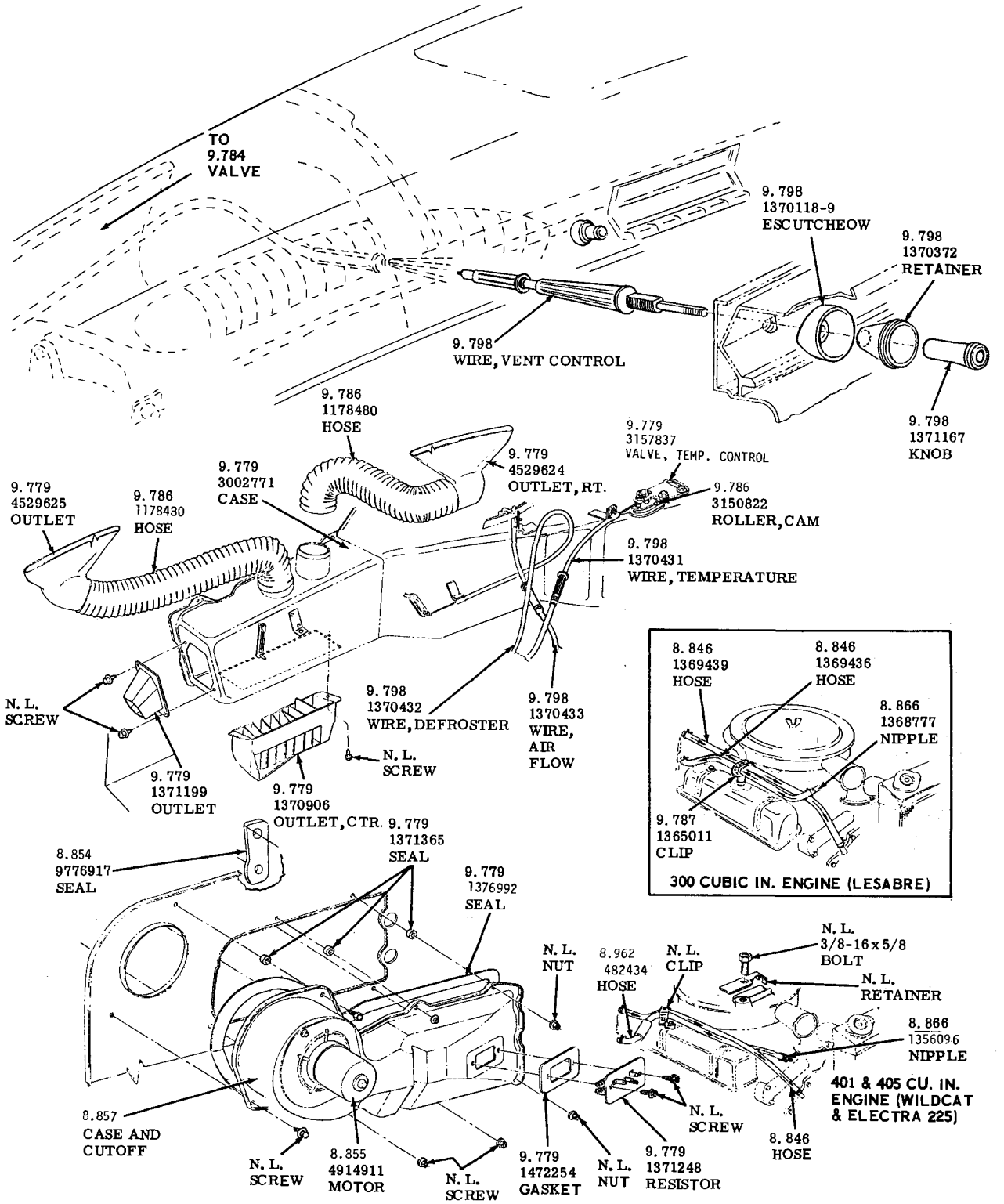

HEATER AND DEFROSTER
1965 LESABRE-WILDCAT-ELECTRA 225
(LESS AIR CONDITIONING)

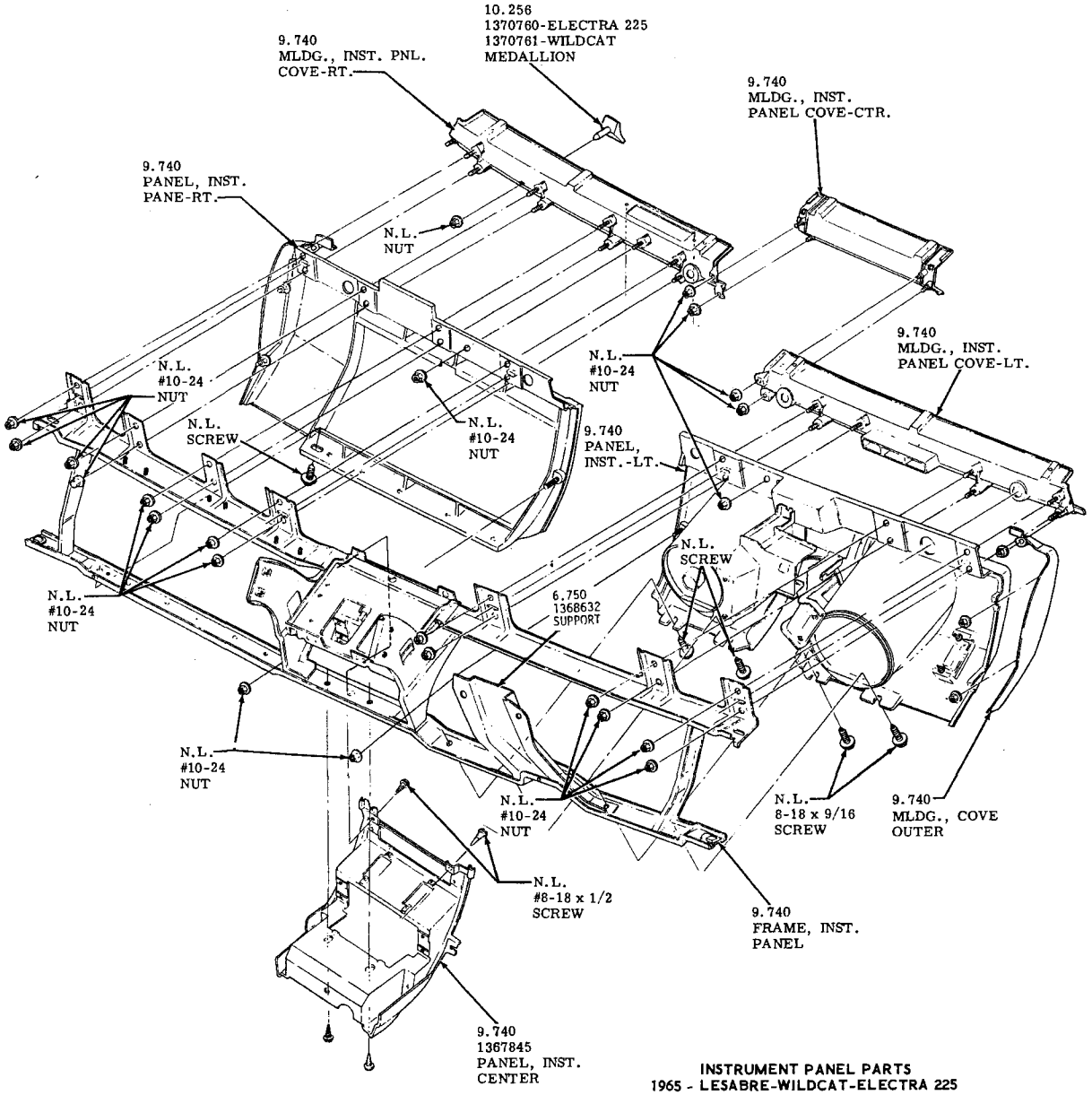

INSTRUMENT PANEL PARTS
1965 - LESABRE-WILDCAT-ELECTRA 225

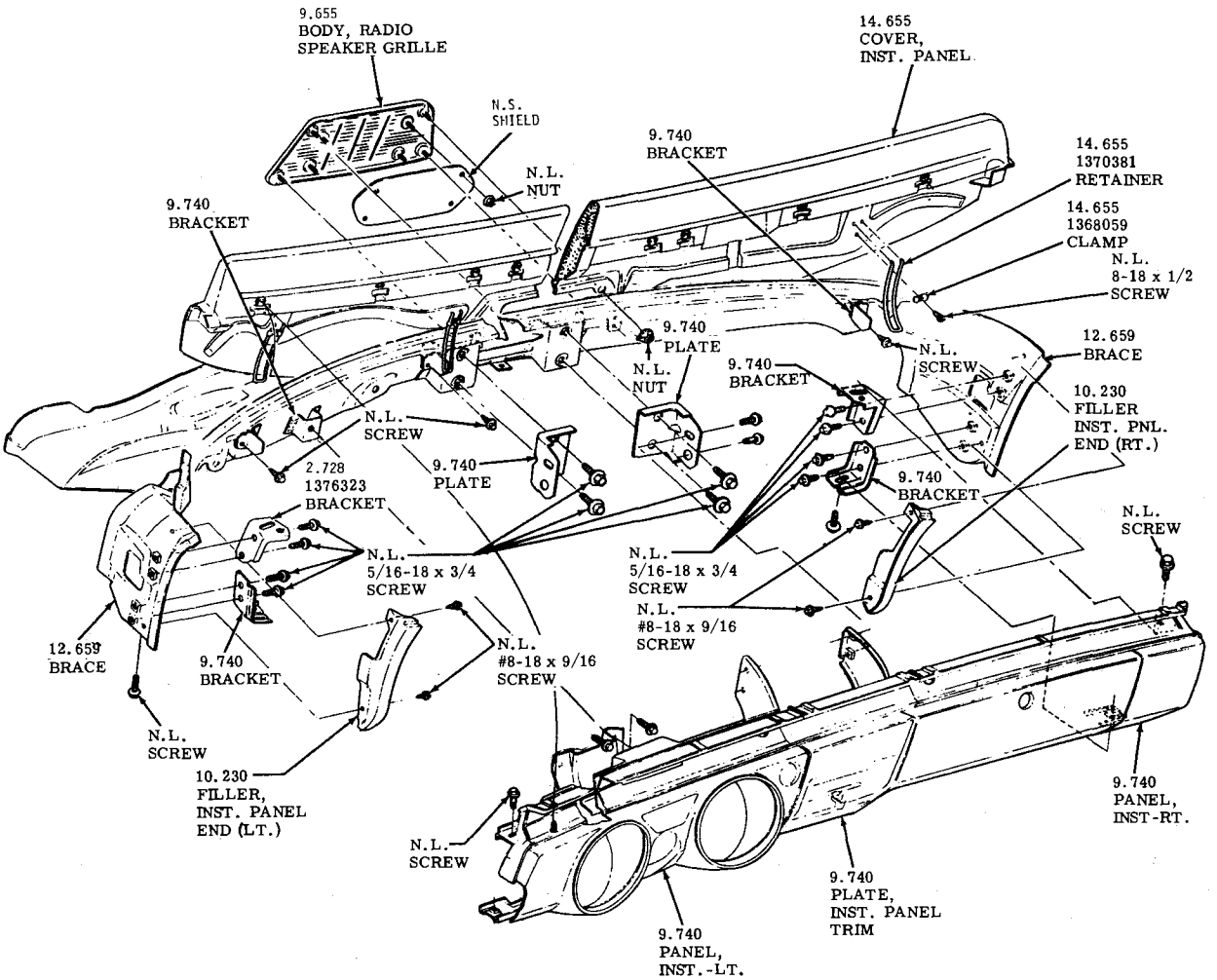

INSTRUMENT PANEL ATTACHING PARTS
AND INSTRUMENT PANEL COVER
1965 - LESABRE-WILDCAT-ELECTRA 225

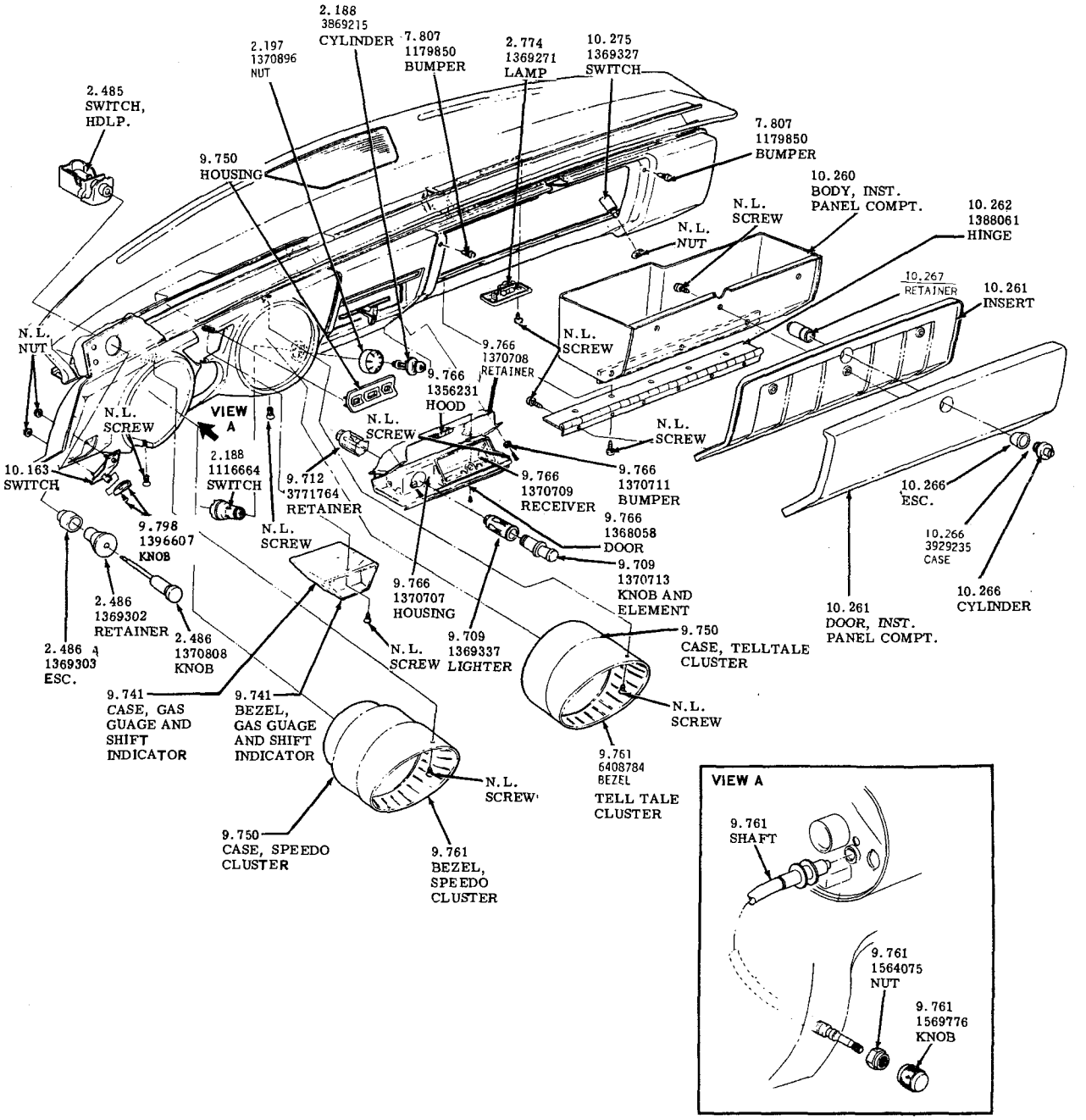

INSTRUMENT PANEL HARDWARE
1965 - LESABRE-WILDCAT-ELECTRA 225

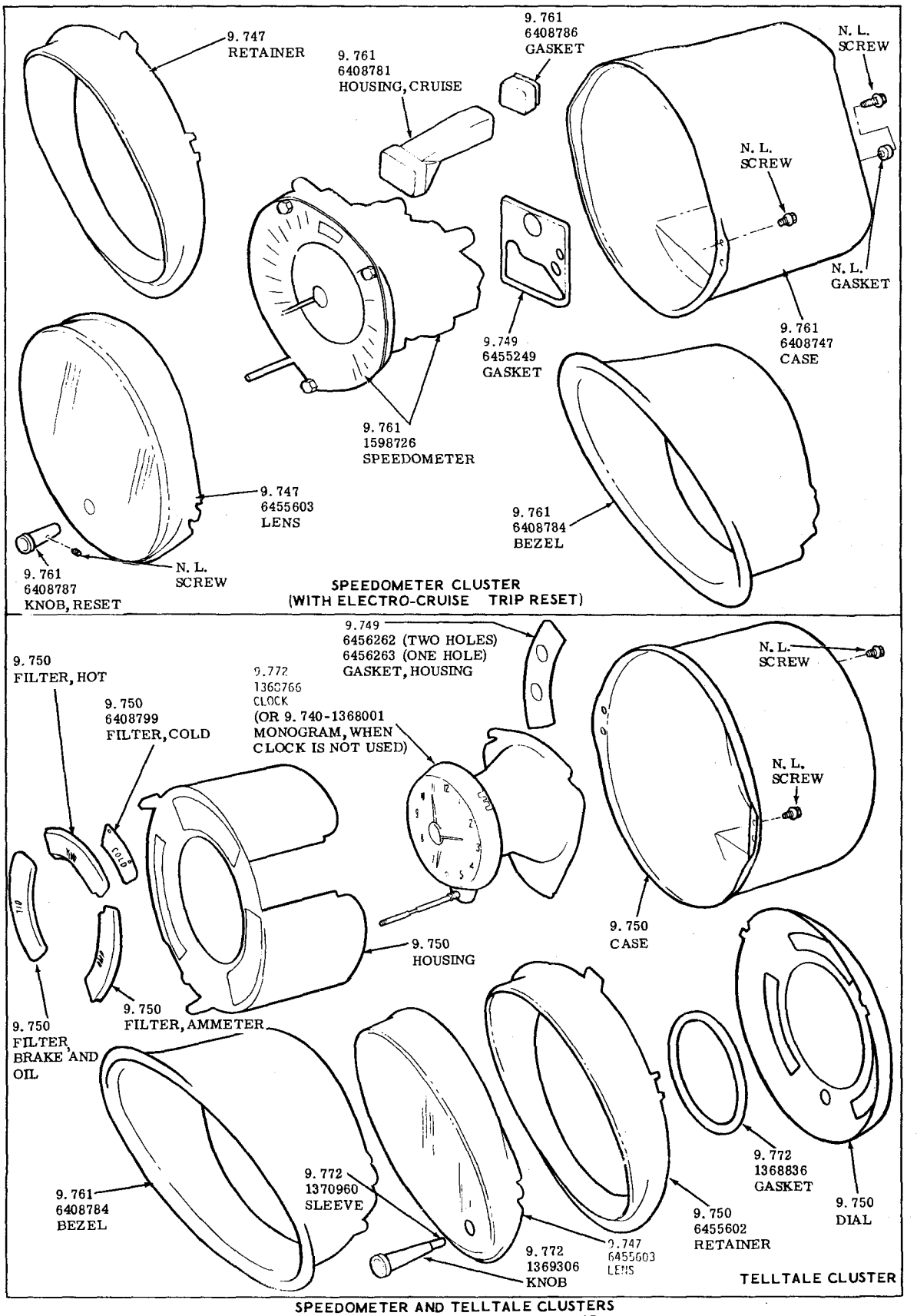

SPEEDOMETER AND TELLTALE CLUSTERS
1965-LESABRE-WILDCAT-ELECTRA 225

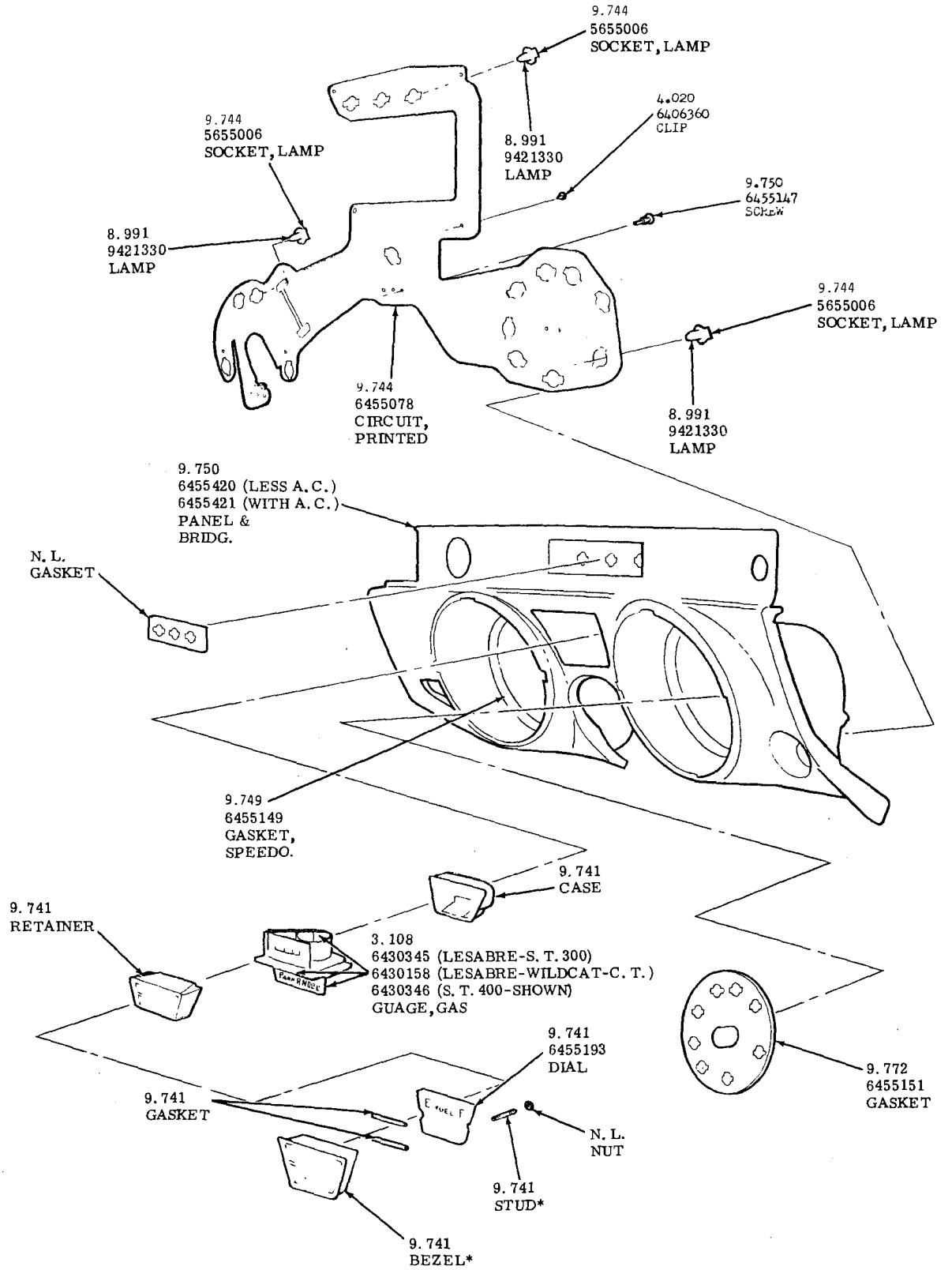

*NOTE: 9.741-6455190-BEZEL INCLUDES 2-9.741-6455192 STUD

GAS GUAGE, SHIFT INDICATOR
INS'T. PANEL AND CIRCUIT
1965-LESABRE-WILDCAT-ELECTRA 225

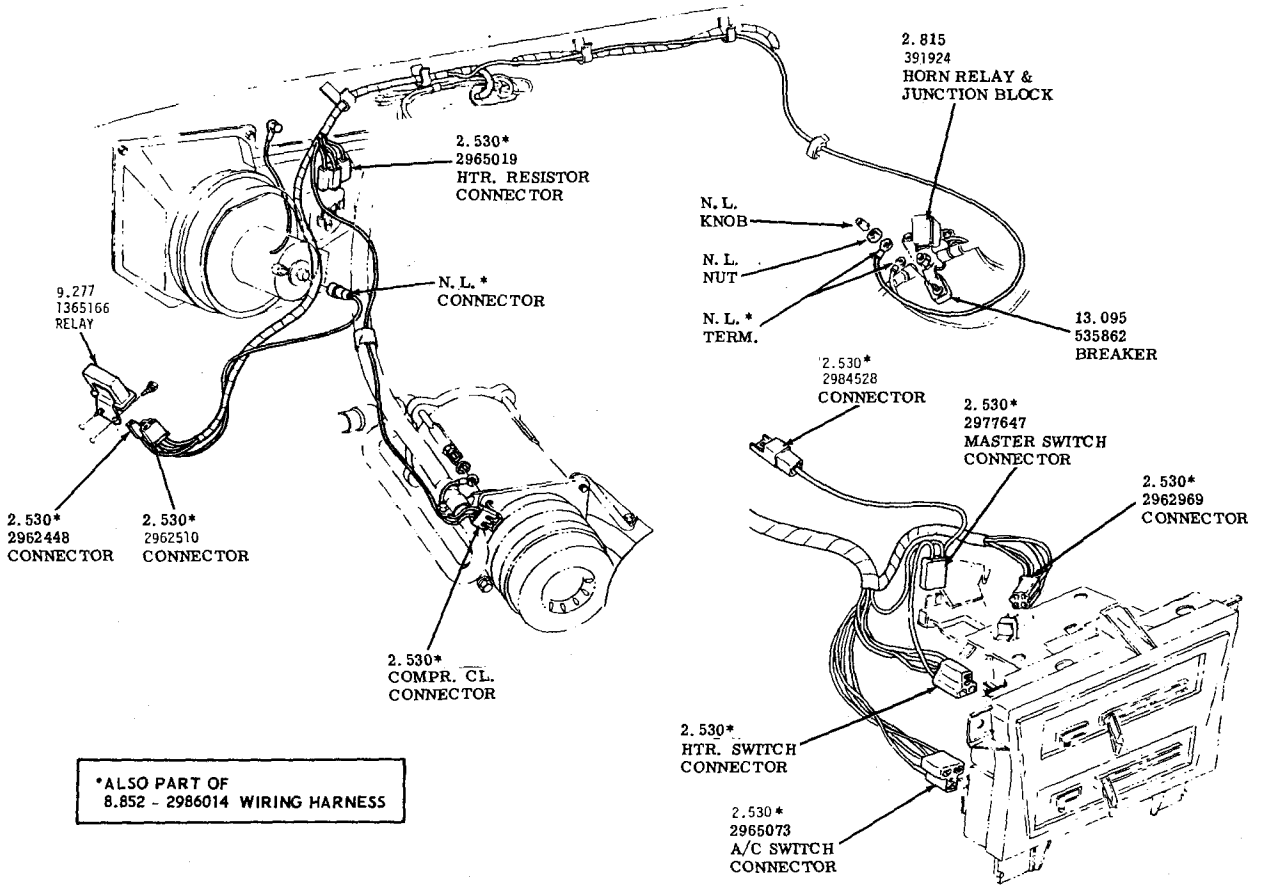

1965 RIVIERA AIR CONDITIONING WIRING HARNESS

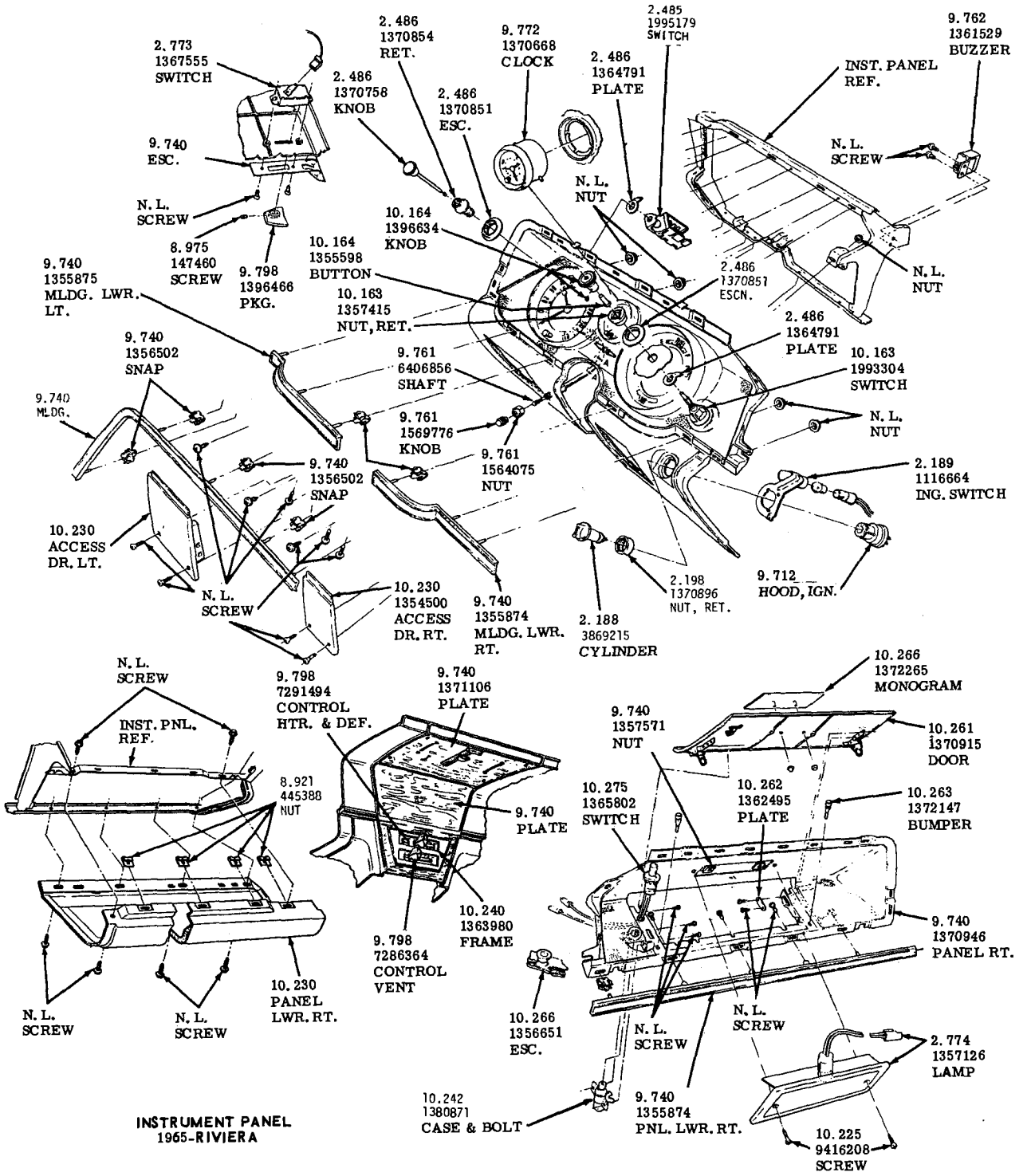

INSTRUMENT PANEL
1965-RIVIERA

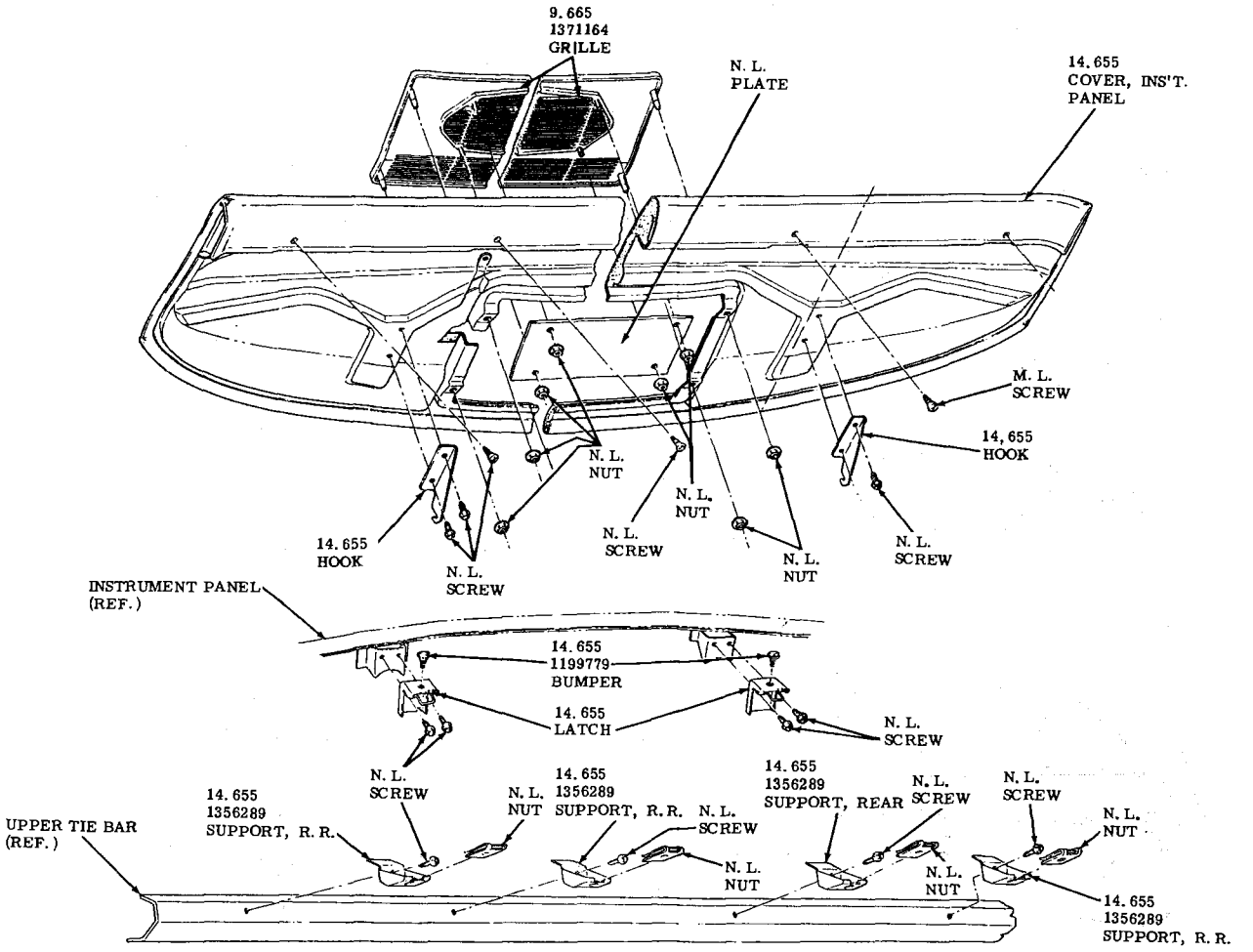

INSTRUMENT PANEL COVER
1965 - RIVIERA

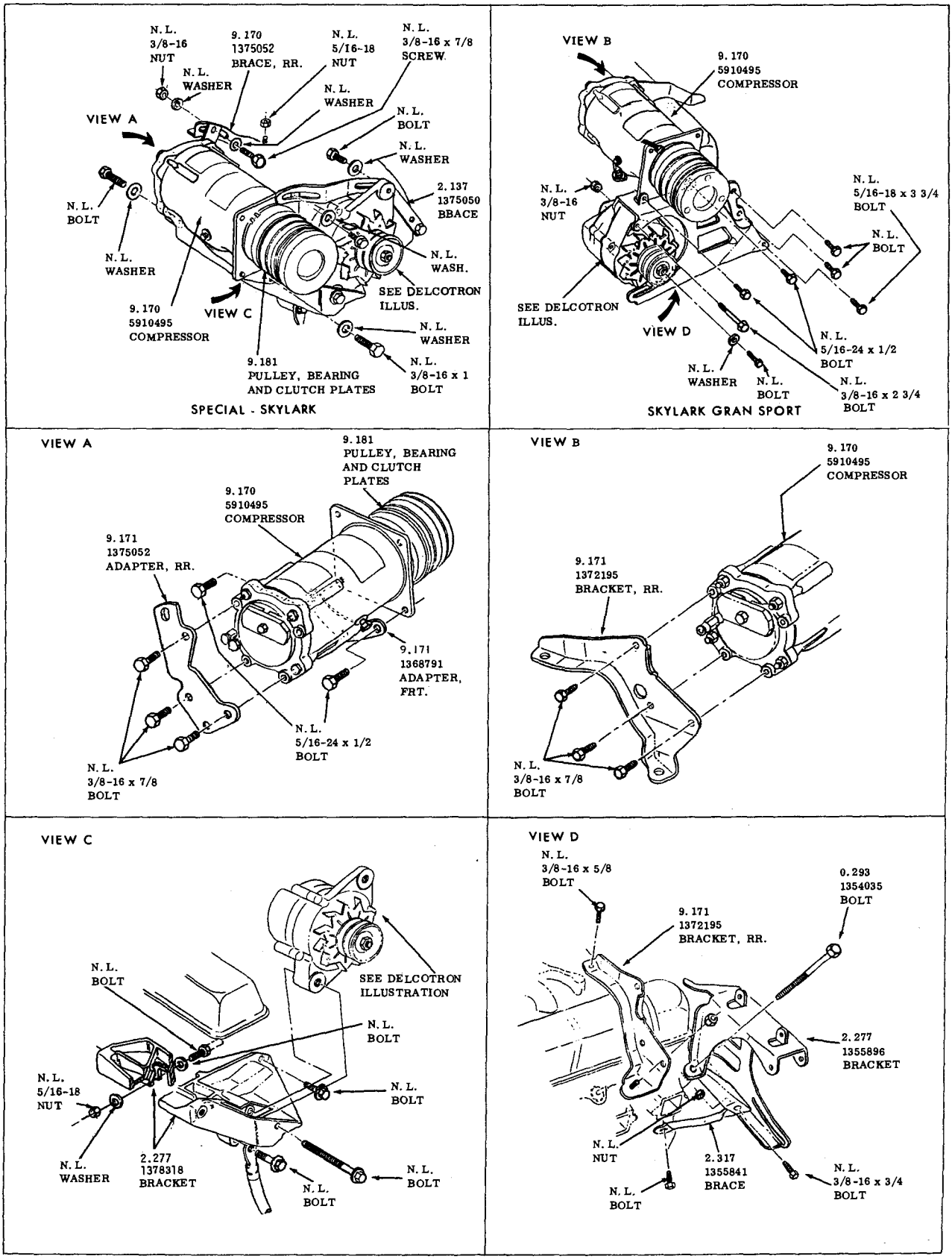

DELCOTRON AND COMPRESSOR MOUNTING
1966 - SPECIAL - SKYLARK - SKYLARK GRAN SPORT

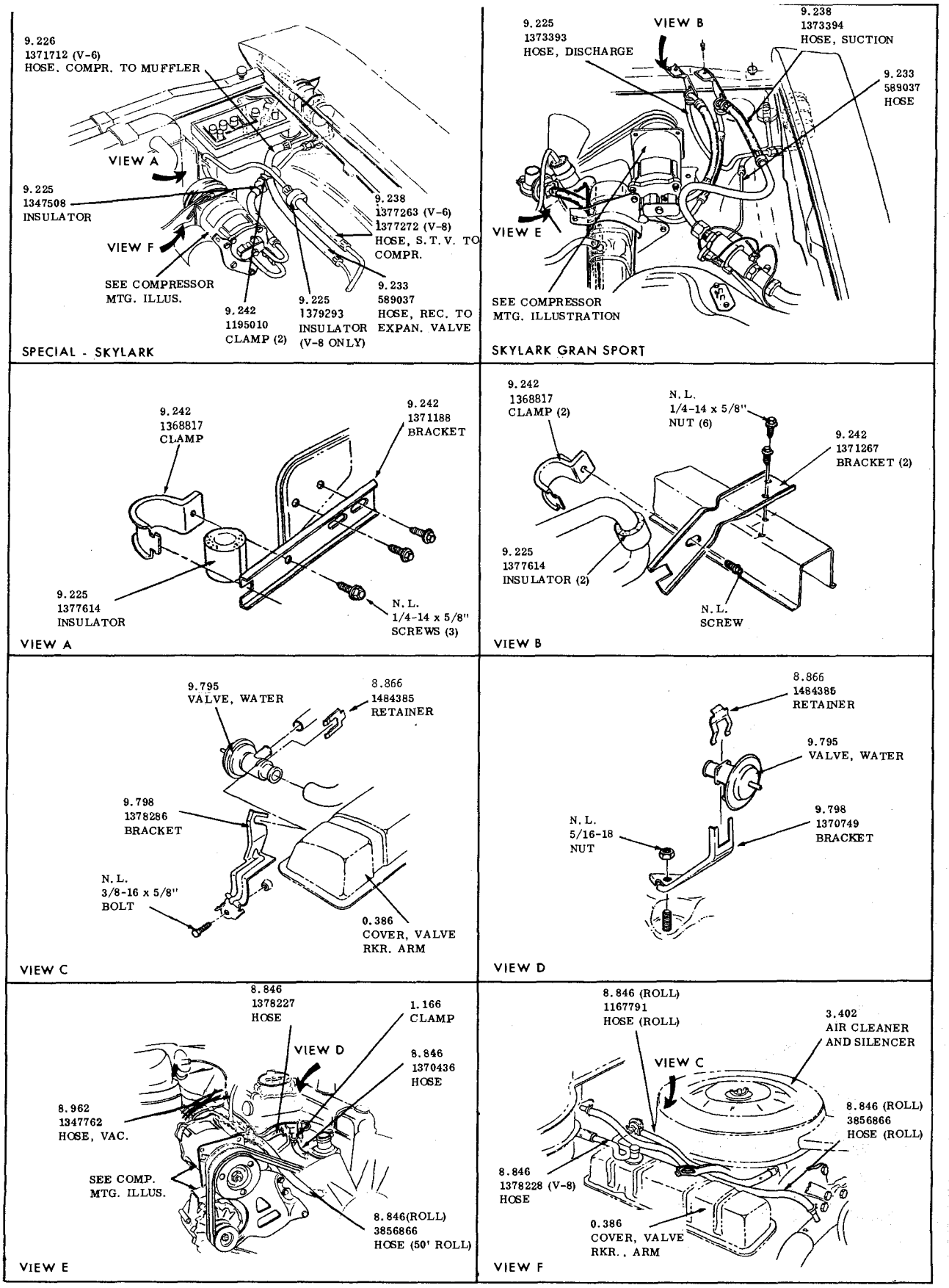

AIR CONDITIONING HOSES

1966 - SPECIAL -SKYLARK - SKYLARK GRAN SPORT

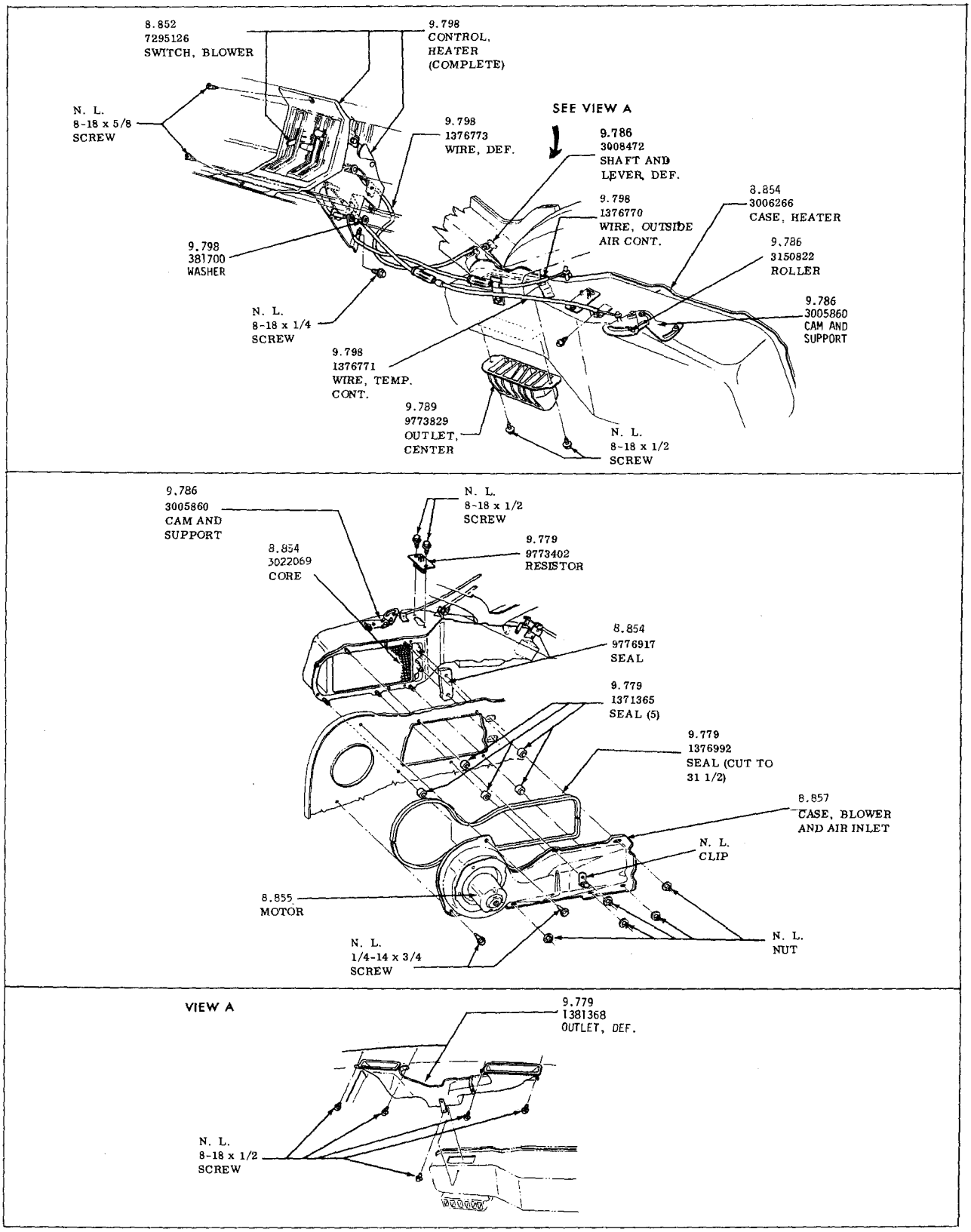

HEATER AND DEFROSTER
1966-1967 —SPECIAL—SKYLARK—SKYLARK GRAN SPORT

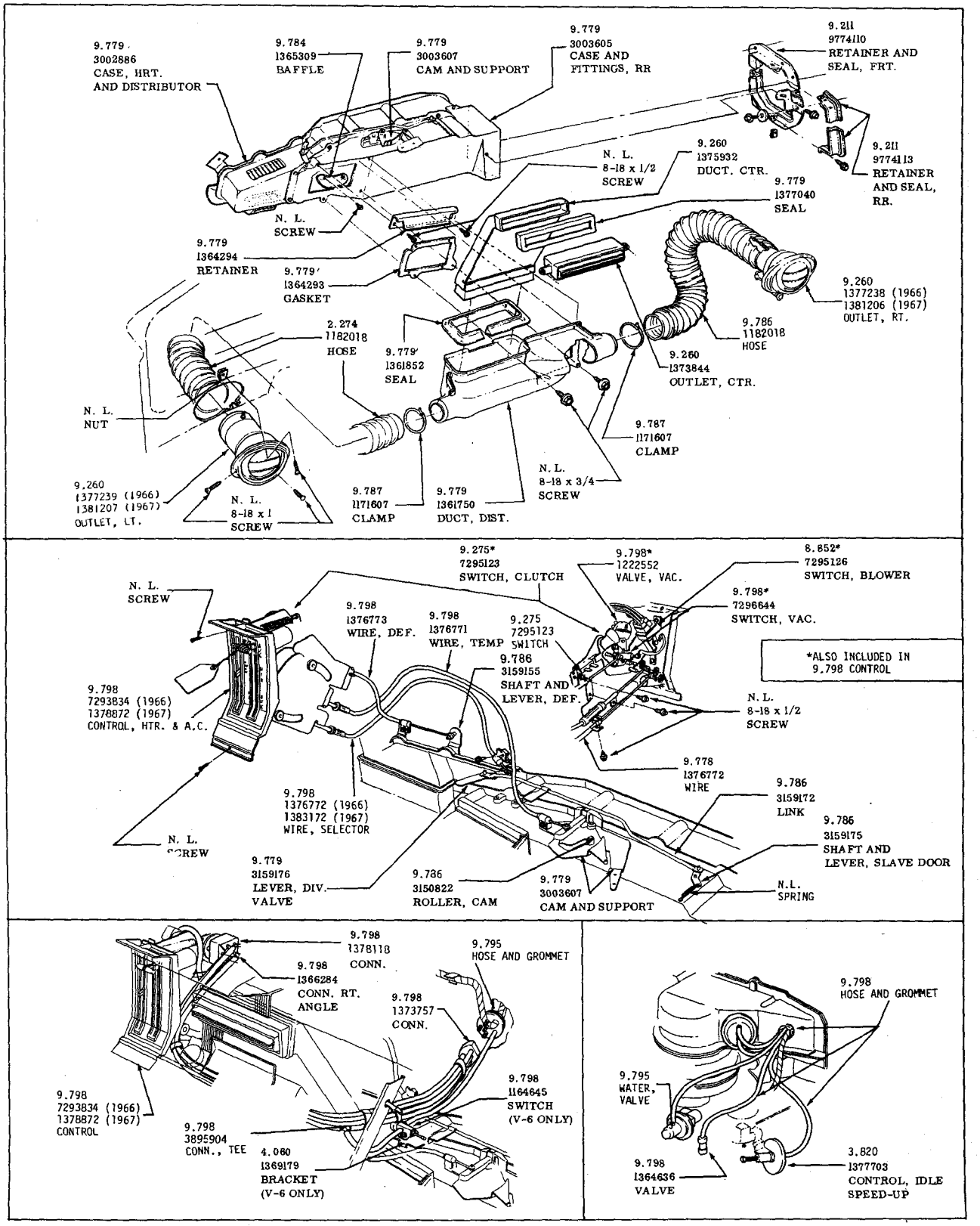

AIR CONDITIONING
INSTRUMENT PANEL UNITS
1966-1967 SPECIAL-SKYLARK-GRAN SPORT

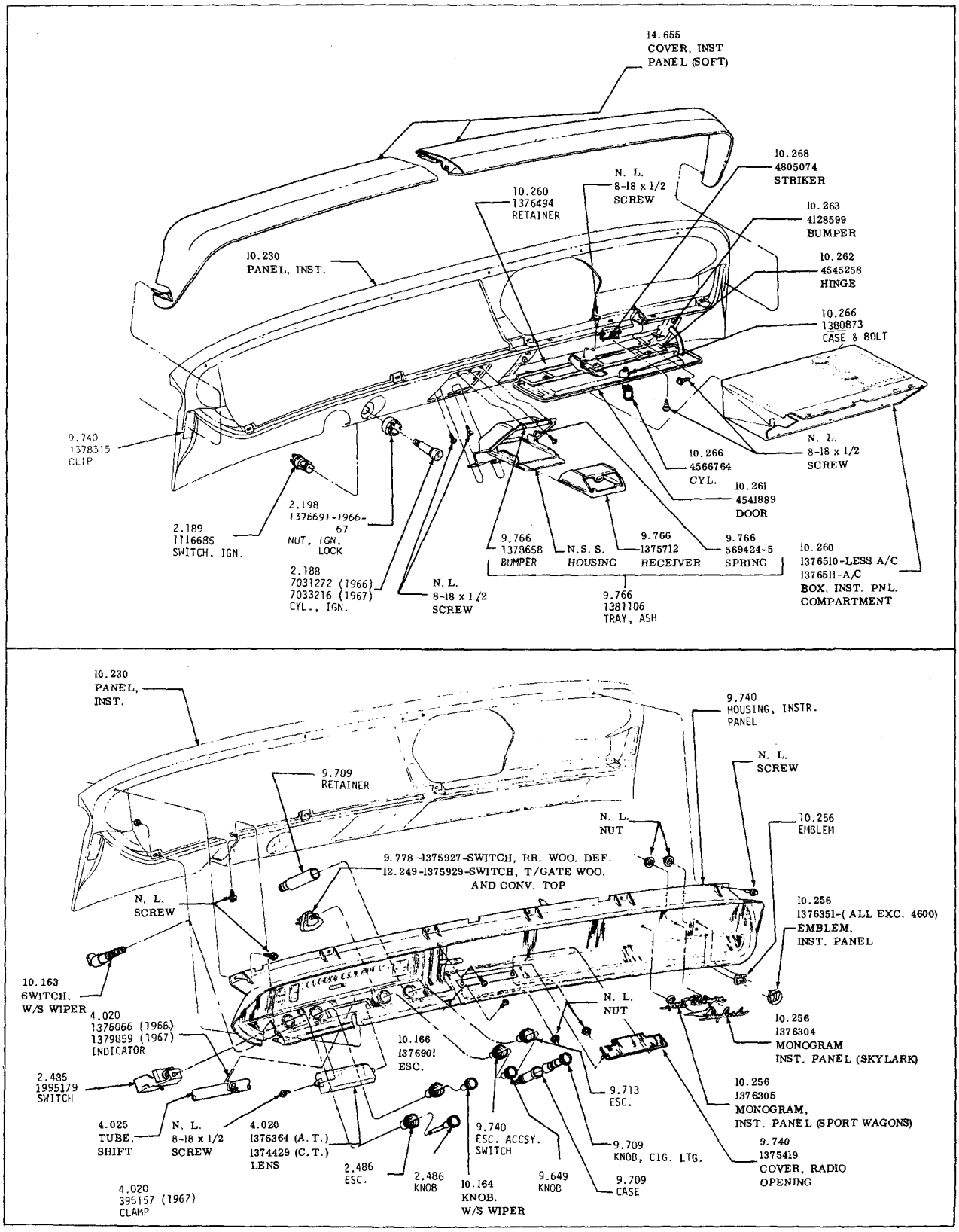

INSTRUMENT PANEL

1966-SPECIAL-SKYLARK-GRAN SPORT

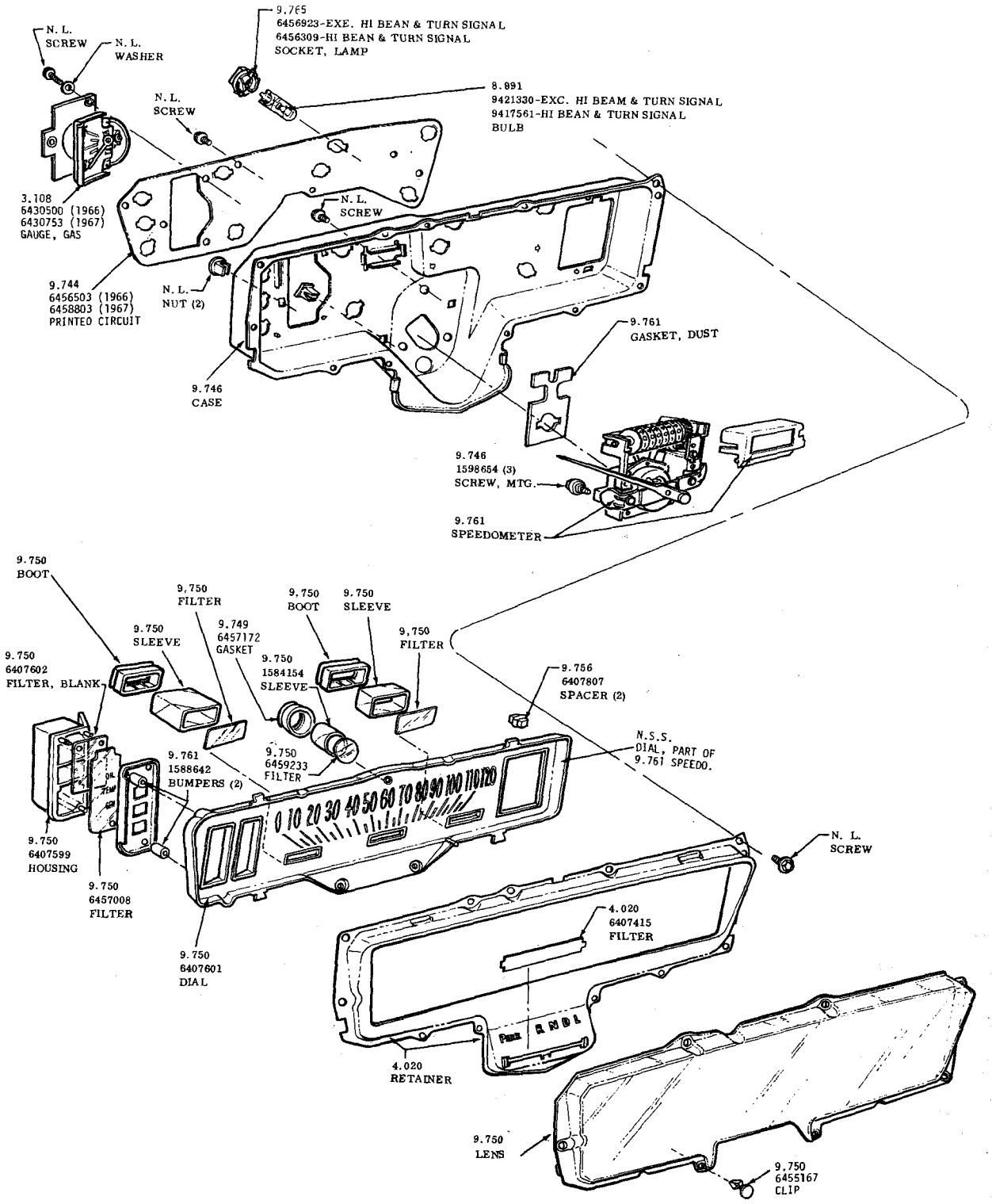

INSTRUMENT CLUSTER
1966-1967 - SPECIAL - SKYLARK - SKYLARK GRAN SPORT

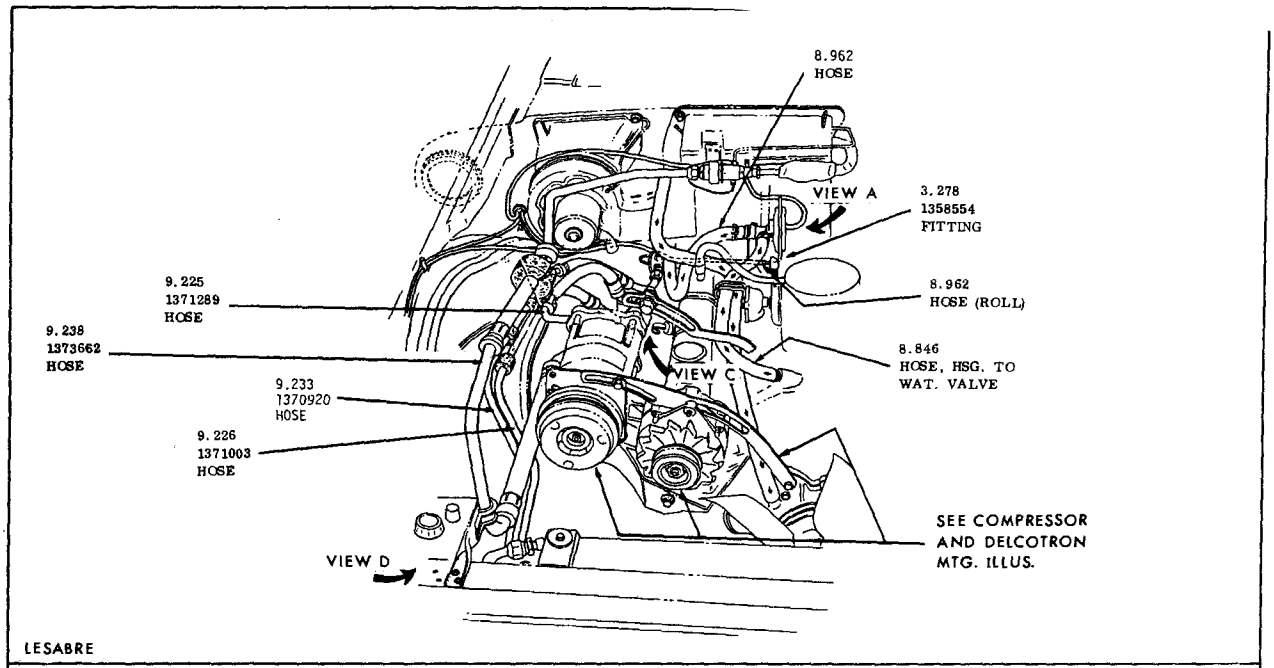

LESABRE

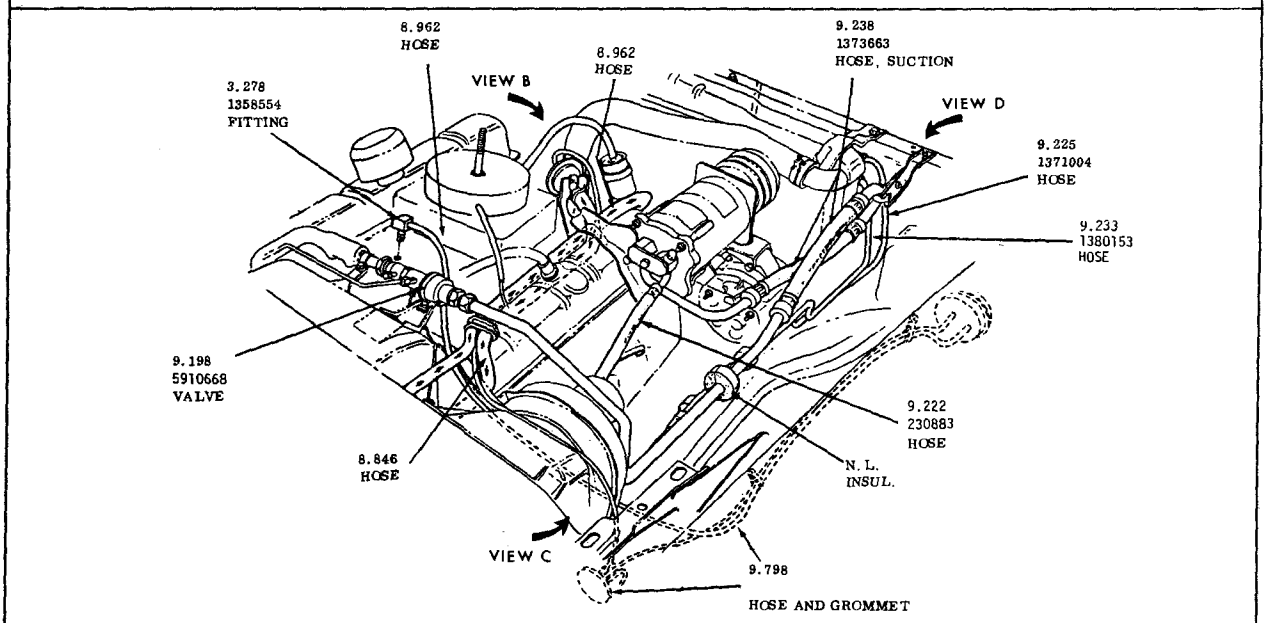

WILDCAT - ELECTRA 225

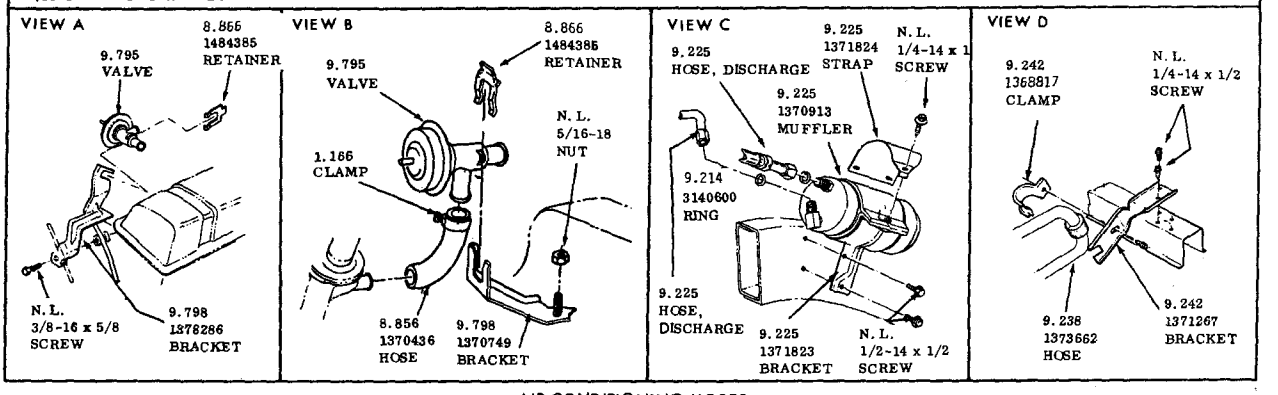

AIR CONDITIONING HOSES
1966 - LESABRE - WILDCAT - ELECTRA 225

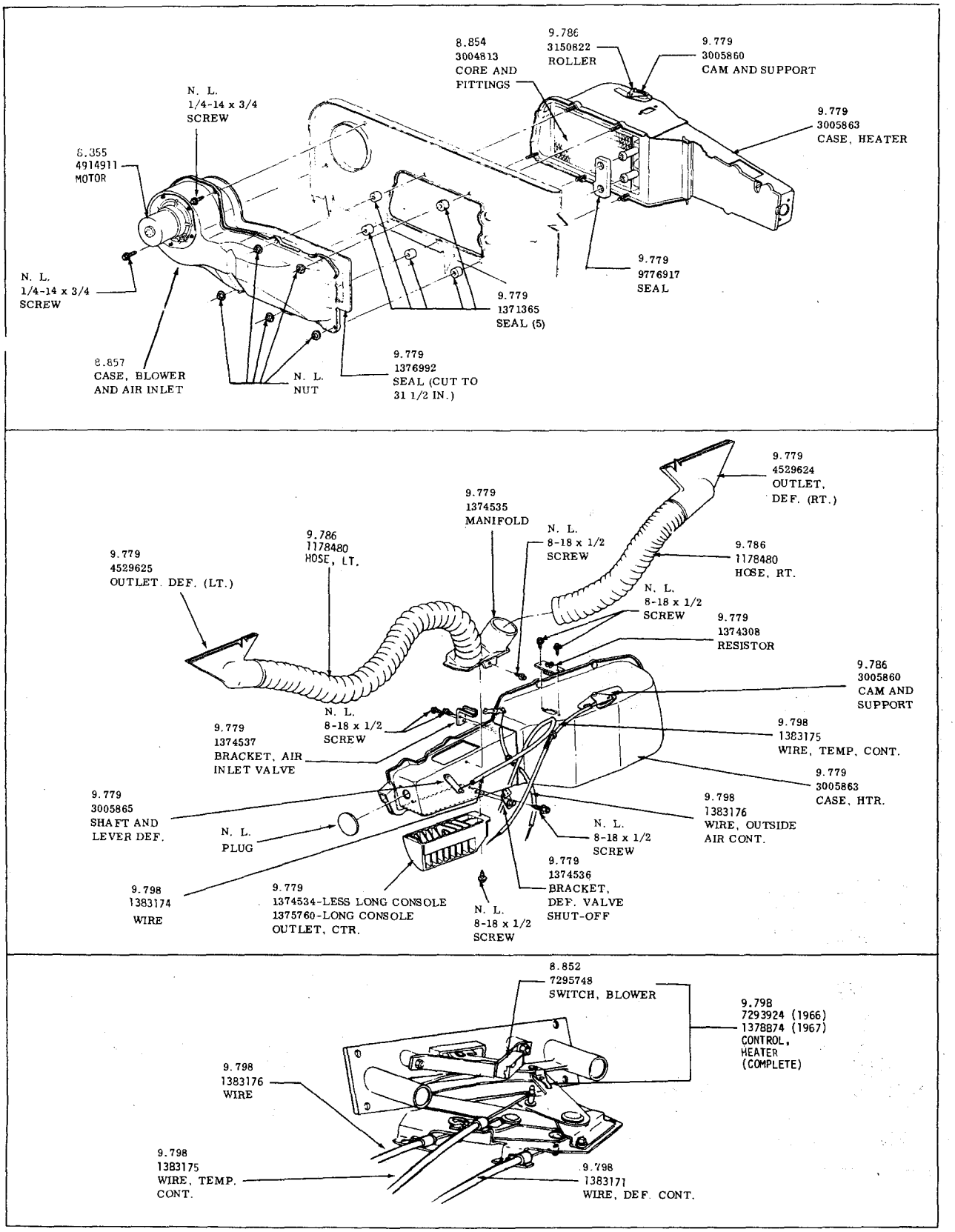

HEATER AND CONTROLS

1966—LE SABRE, WILDCAT, ELECTRA 225

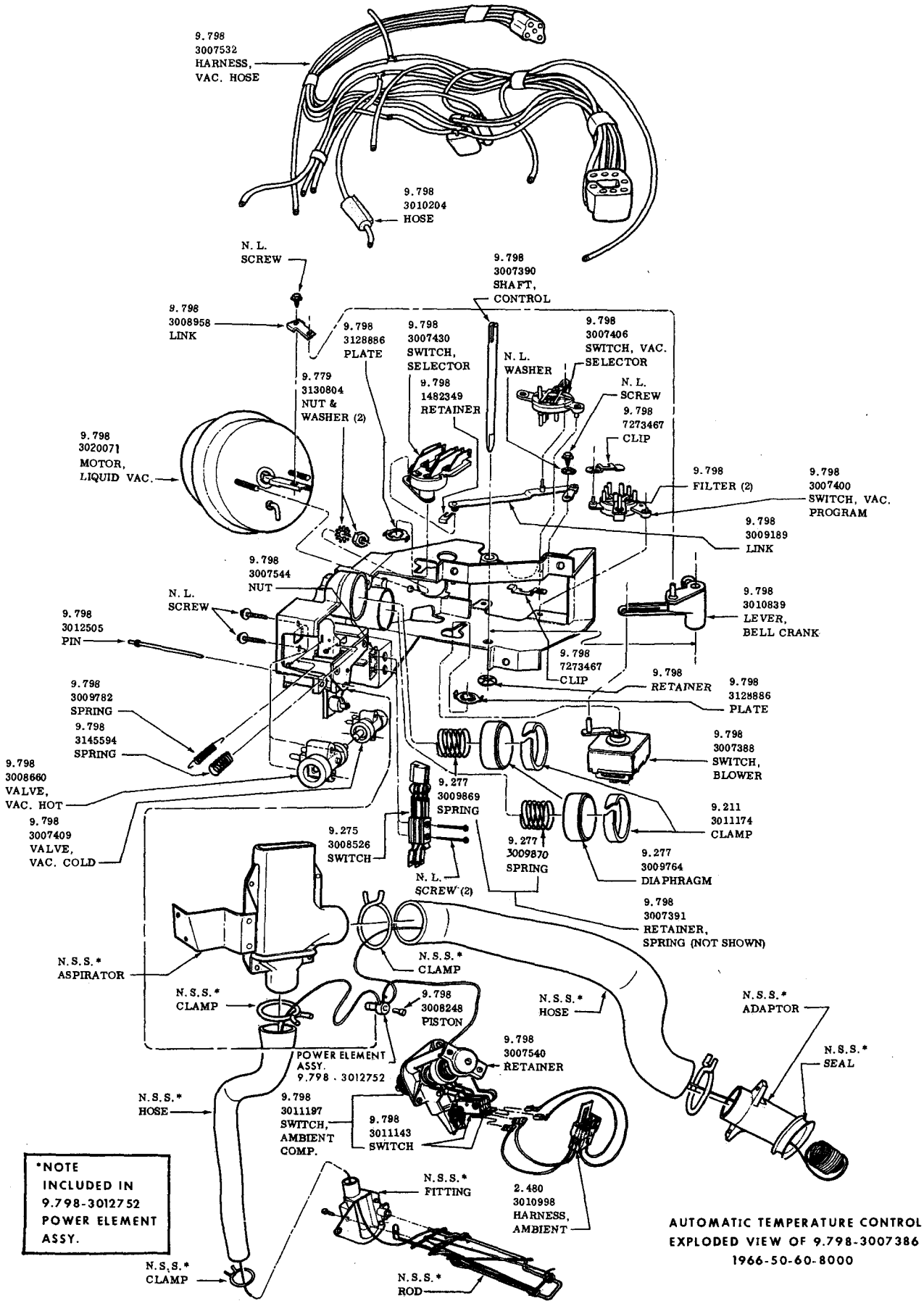

AUTOMATIC TEMPERATURE CONTROL
EXPLODED VIEW OF 9.798-3007386
1966-50-60-8000

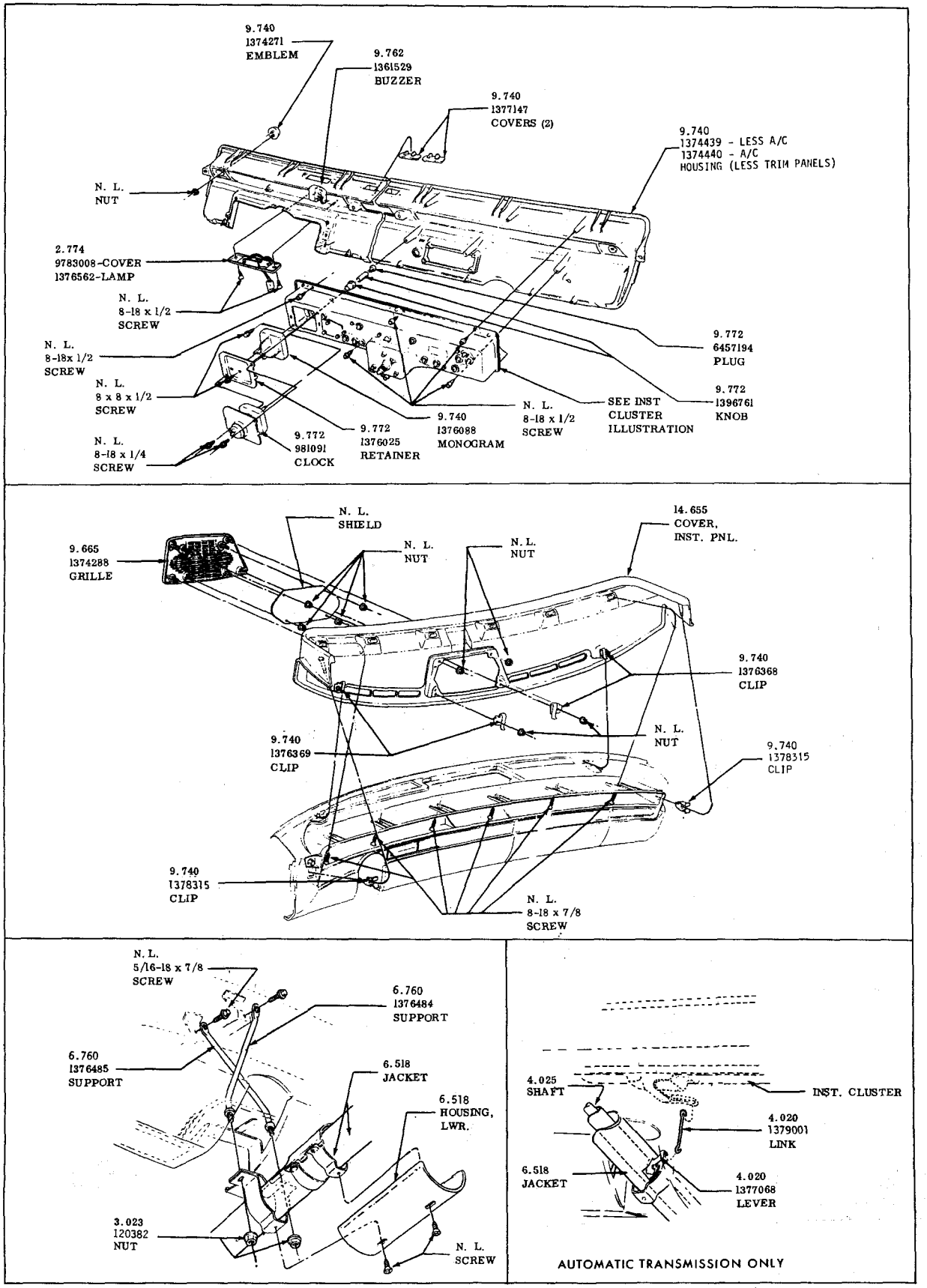

INSTRUMENT PANEL COVER AND HARDWARE
1966-LE SABRE-WILDCAT-ELECTRA 225

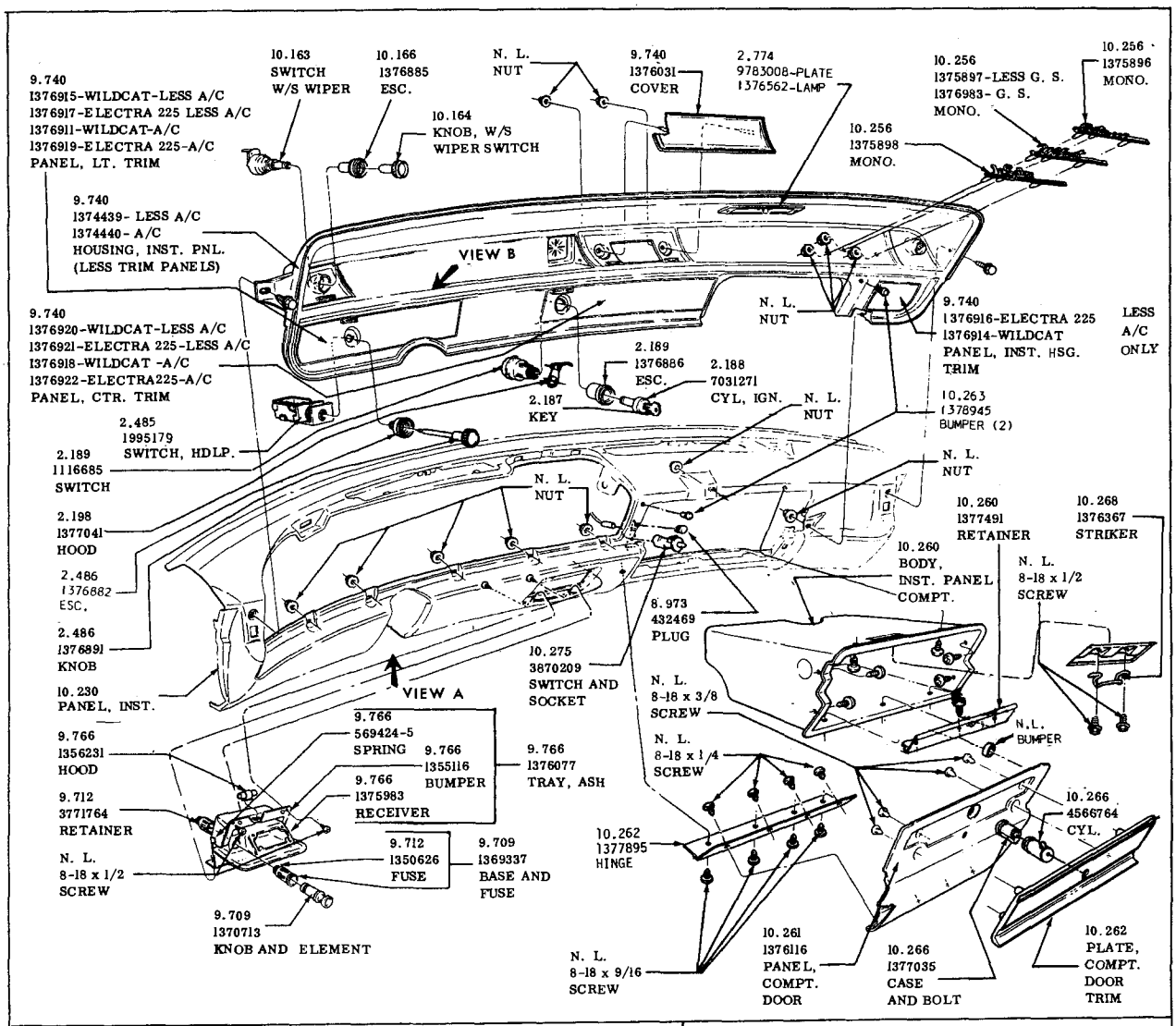

INSTRUMENT PANEL
1966-LE SABRE-WILDCAT ELECTRA 225

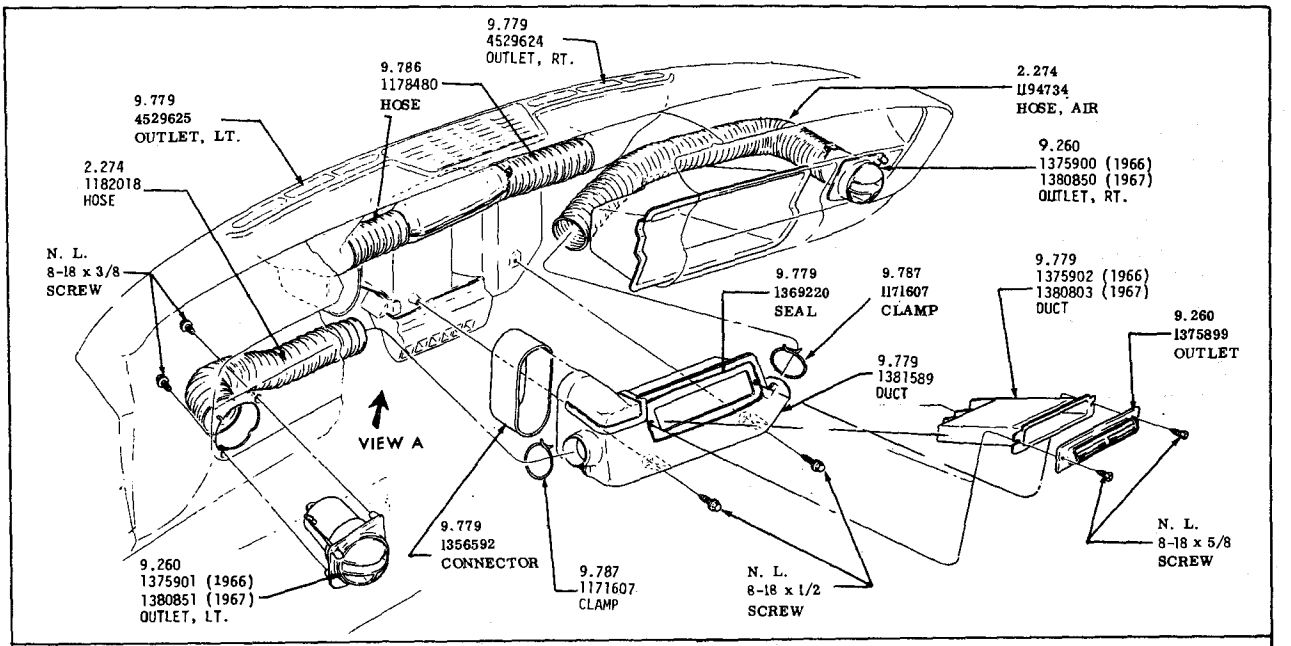

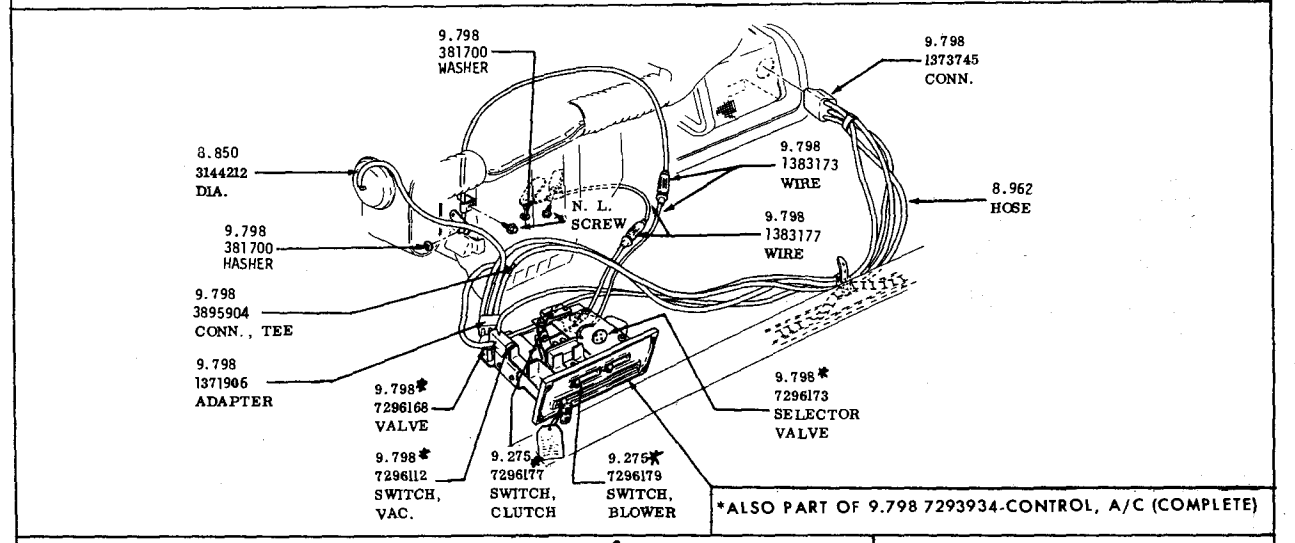

*ALSO PART OF 9.798 7293934-CONTROL, A/C (COMPLETE)

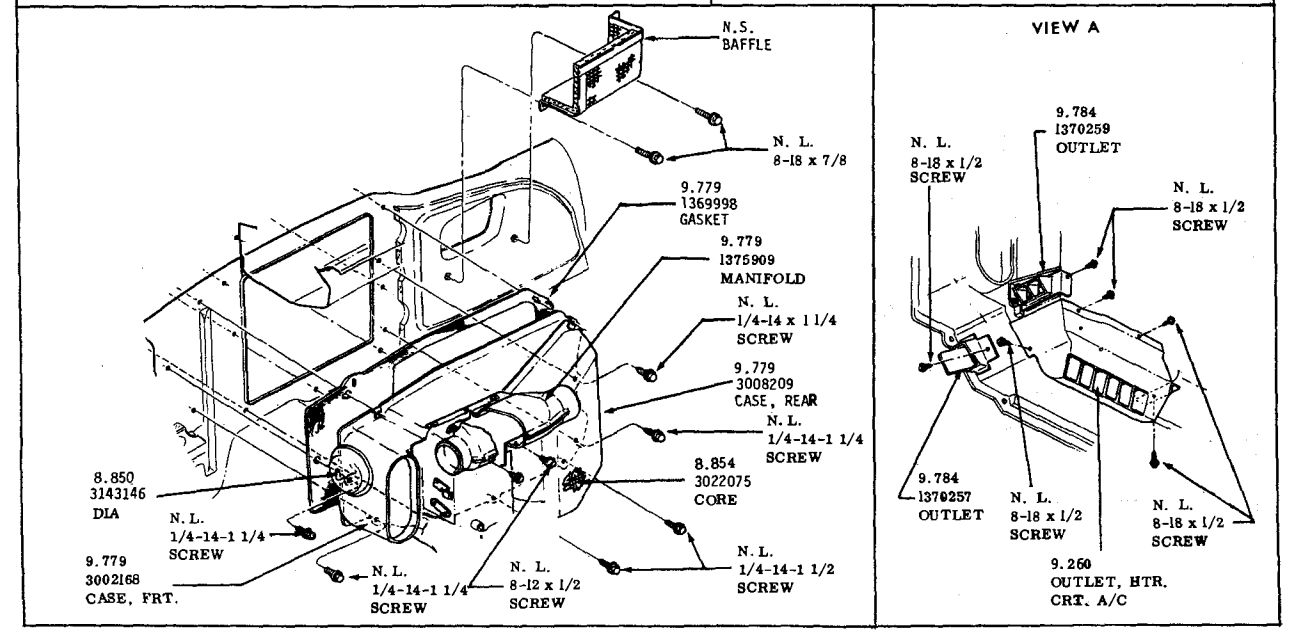

INSTRUMENT PANEL UNITS
1966-1967 -LE SABRE-WILDCAT- ELECTRA 225
AIR CONDITIONING

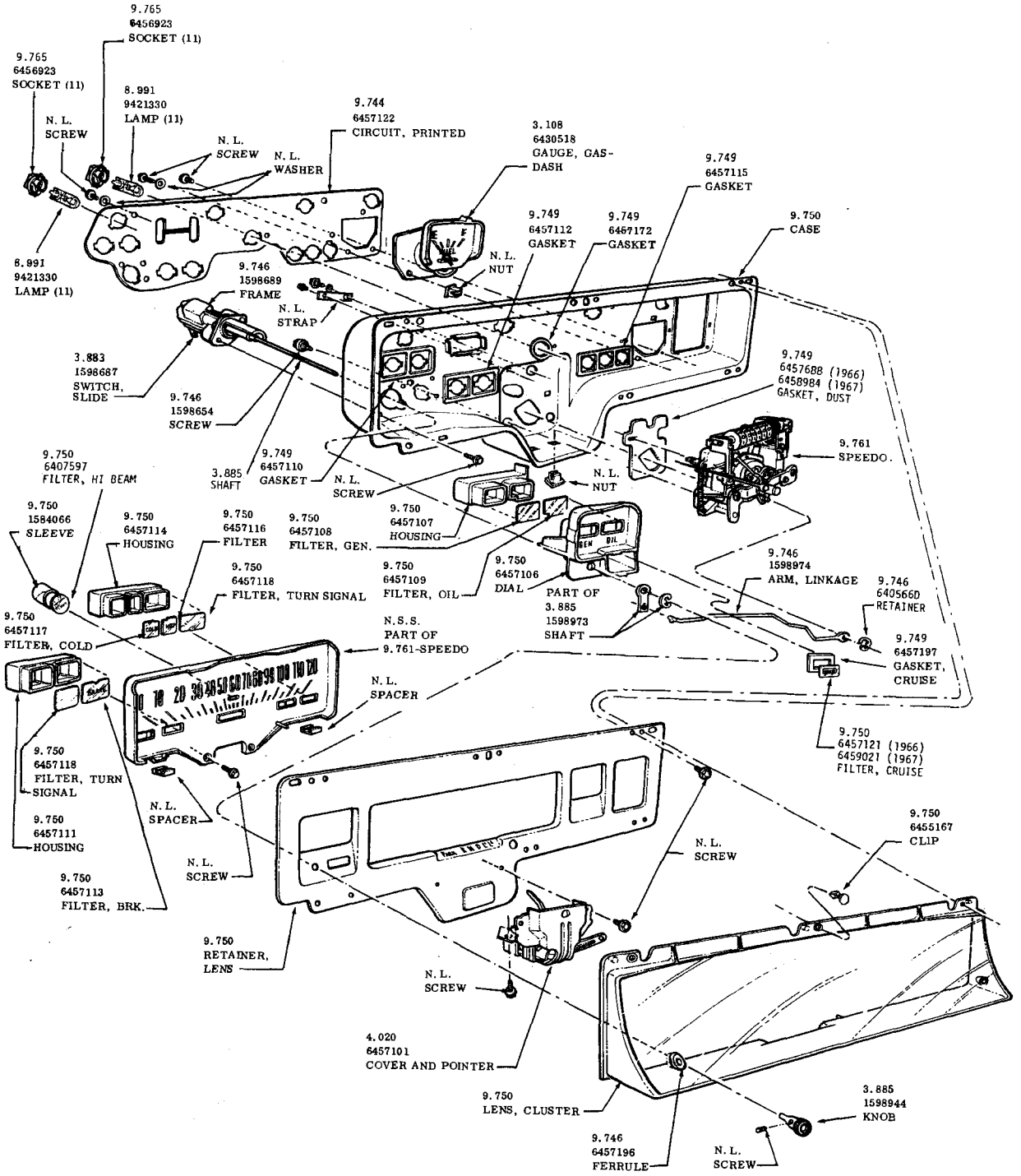

INSTRUMENT CLUSTER
1966-1967 - LESABRE - WILDCAT - ELECTRA 225
(WITH A. T. AND CRUISE CONTROL)

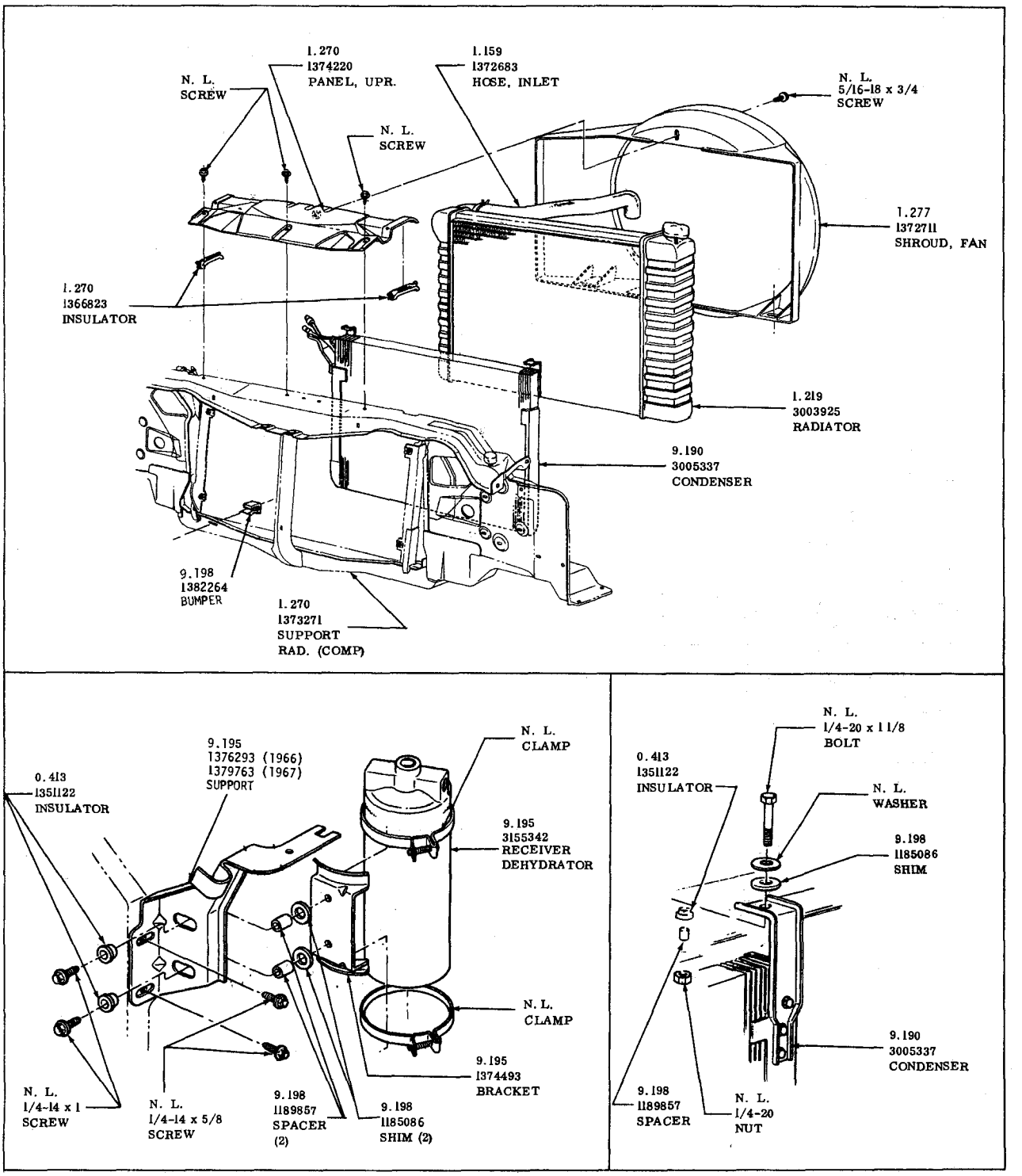

ENGINE COMPARTMENT UNITS
FACTORY INSTALLED AIR COND.
1966-1967 -RIVIERA

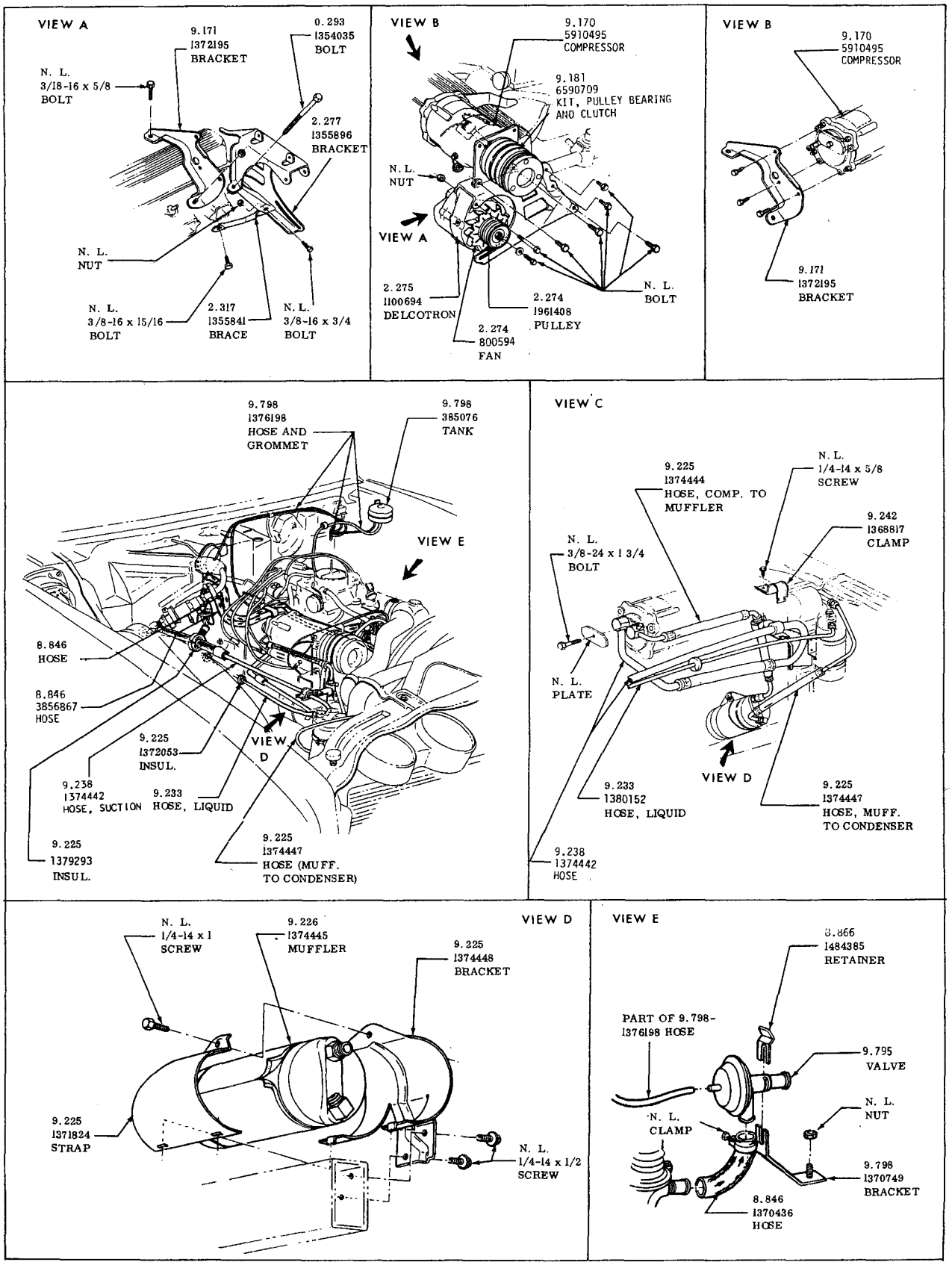

AIR CONDITIONING HOSES
1966-RIVIERA

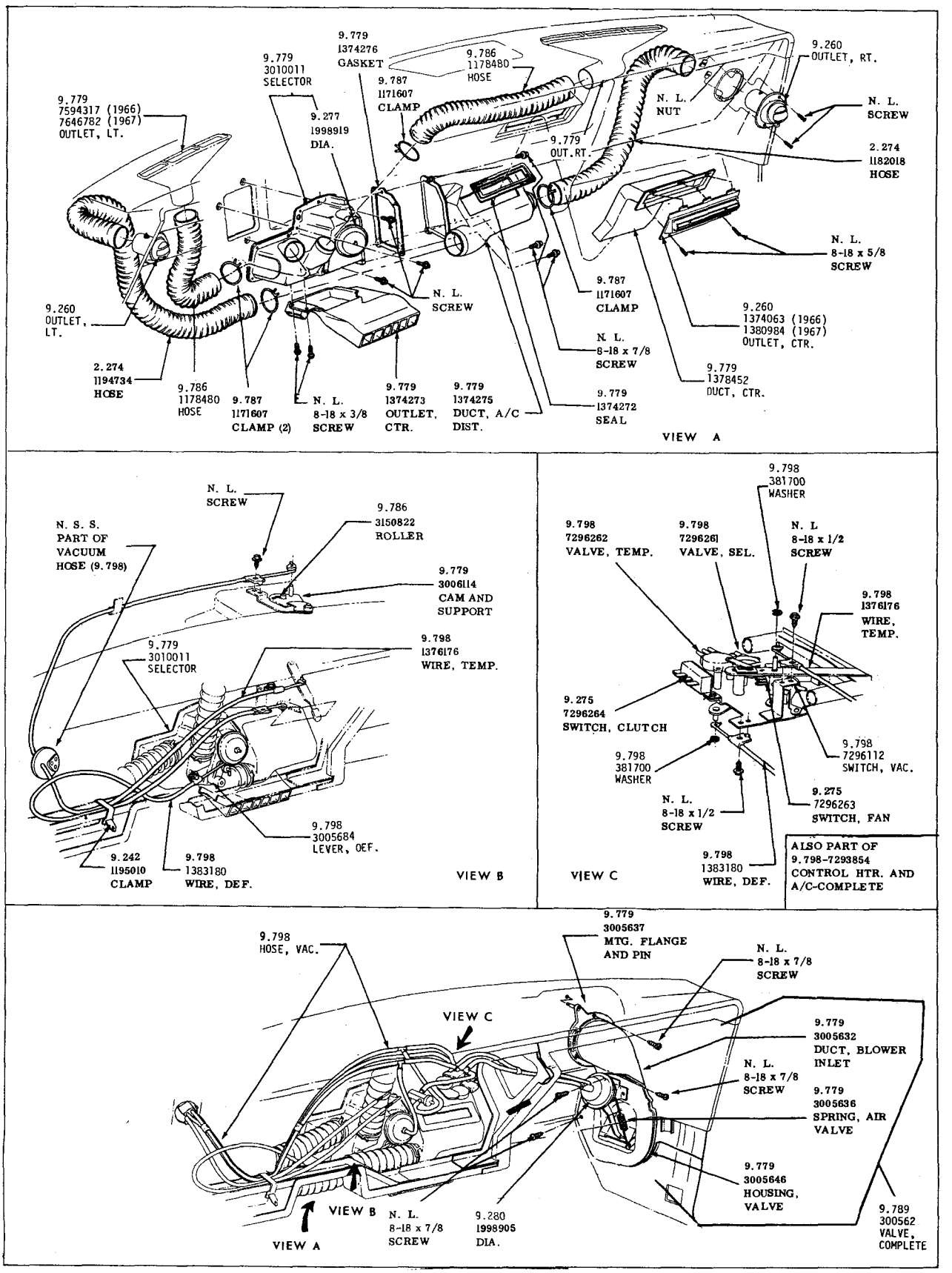

INSTRUMENT PANEL UNITS
AIR CONDITIONING
1966-1967 -RIVIERA

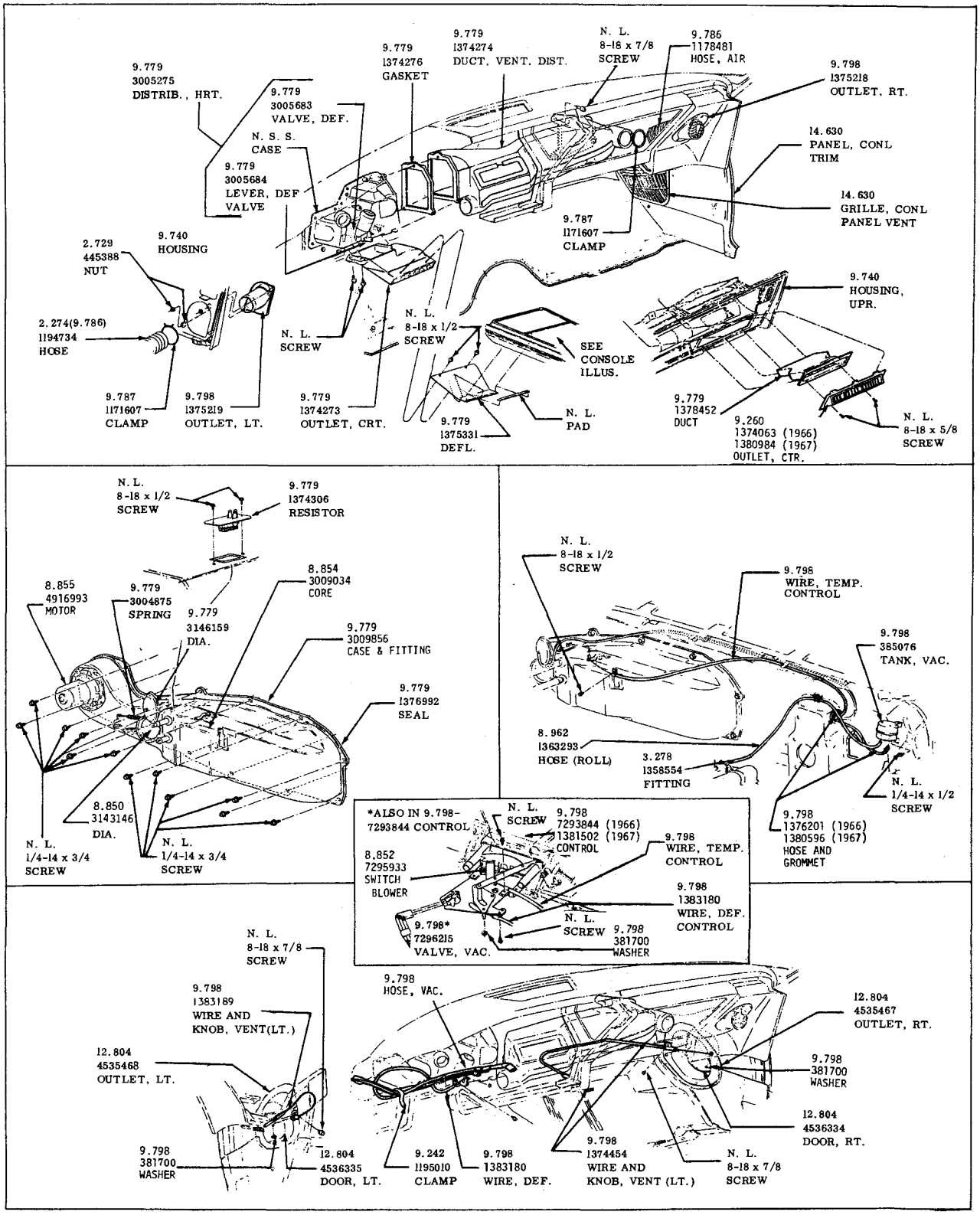

HEATER AND DEFROSTER

1966-1967 —RIVIERA (LESS A.C.)

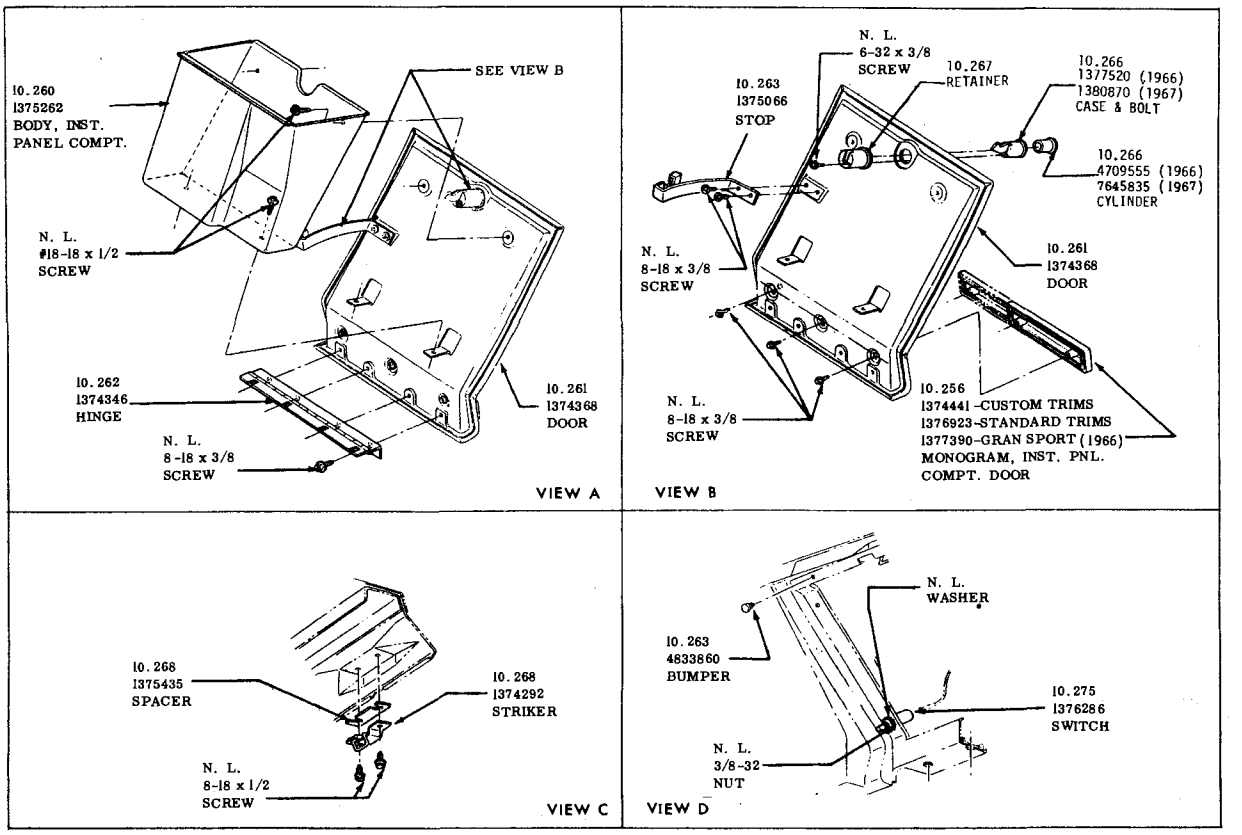

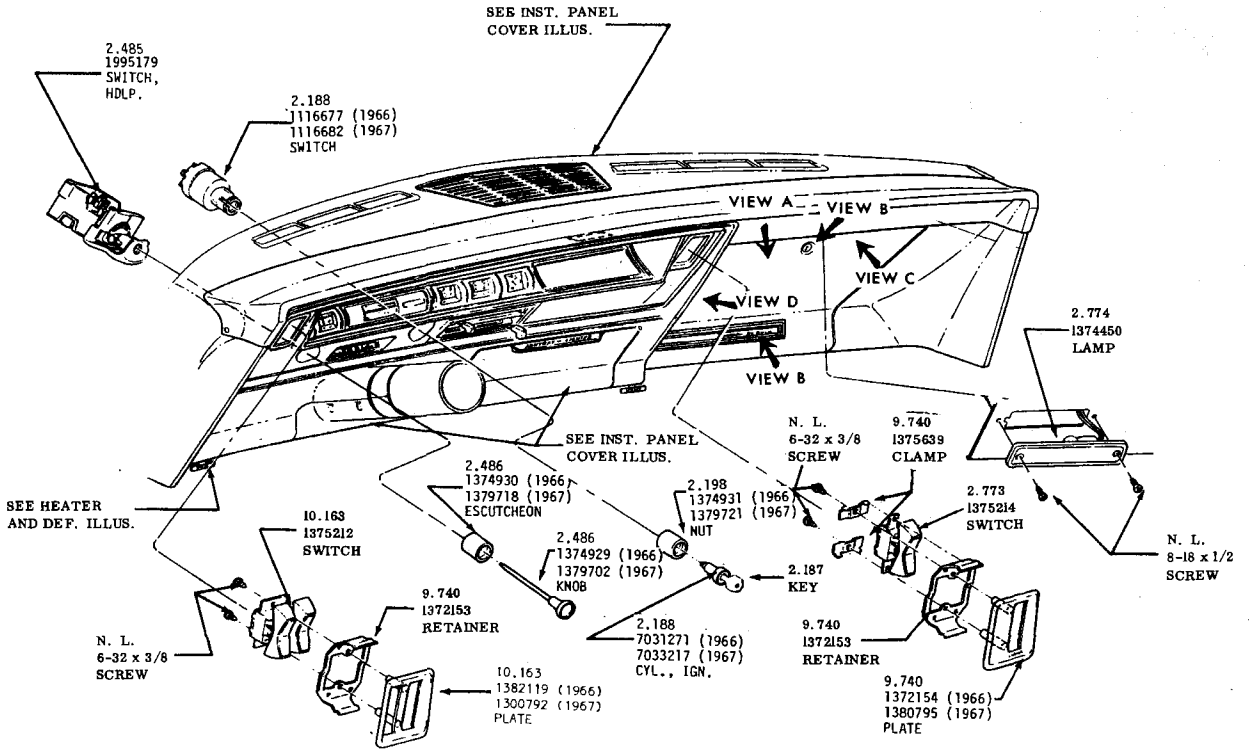

INSTRUMENT PANEL HARDWARE
1966-1967—RIVIERA

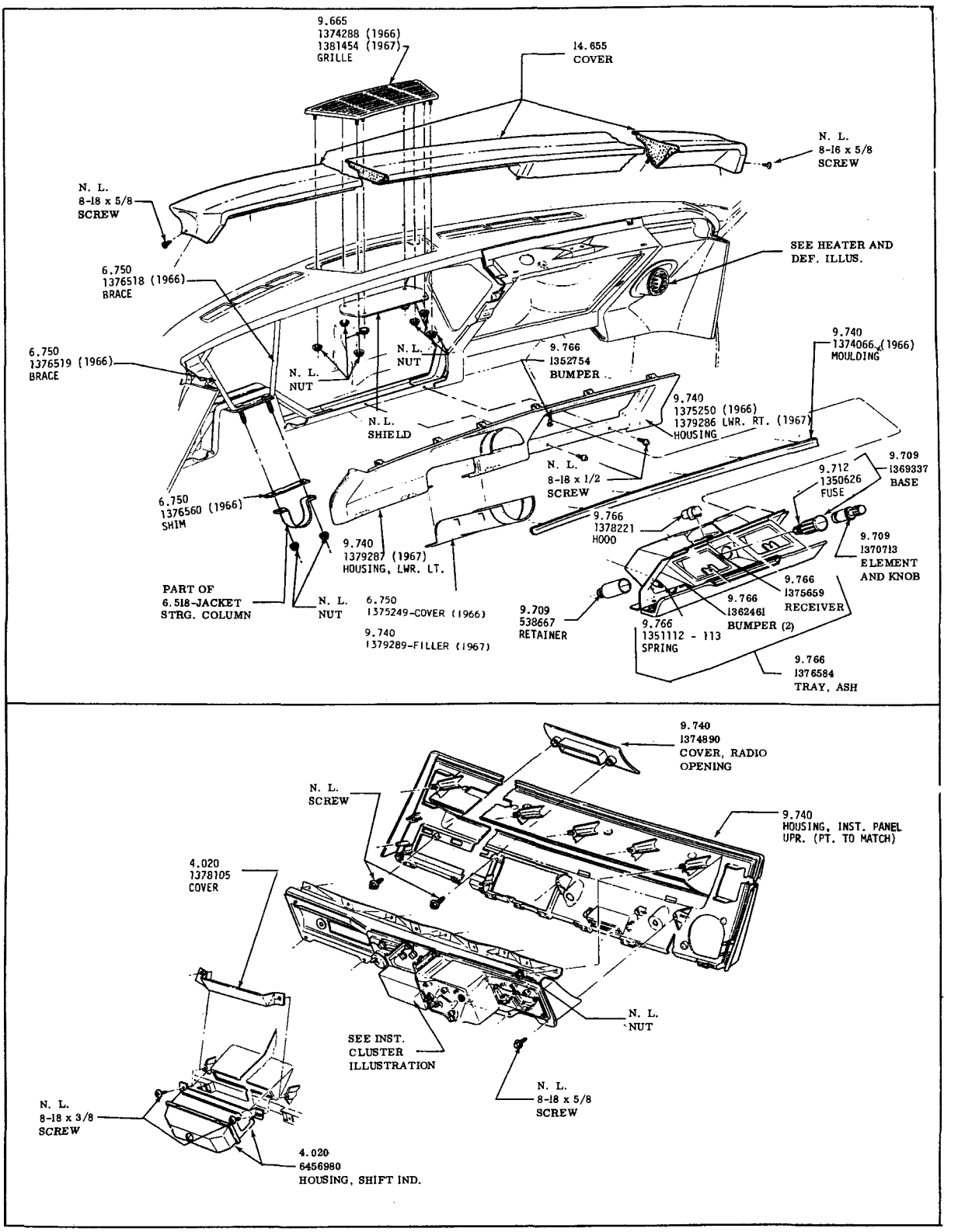

INSTRUMENT PANEL COVER AND HOUSING
1966-1967—RIVIERA

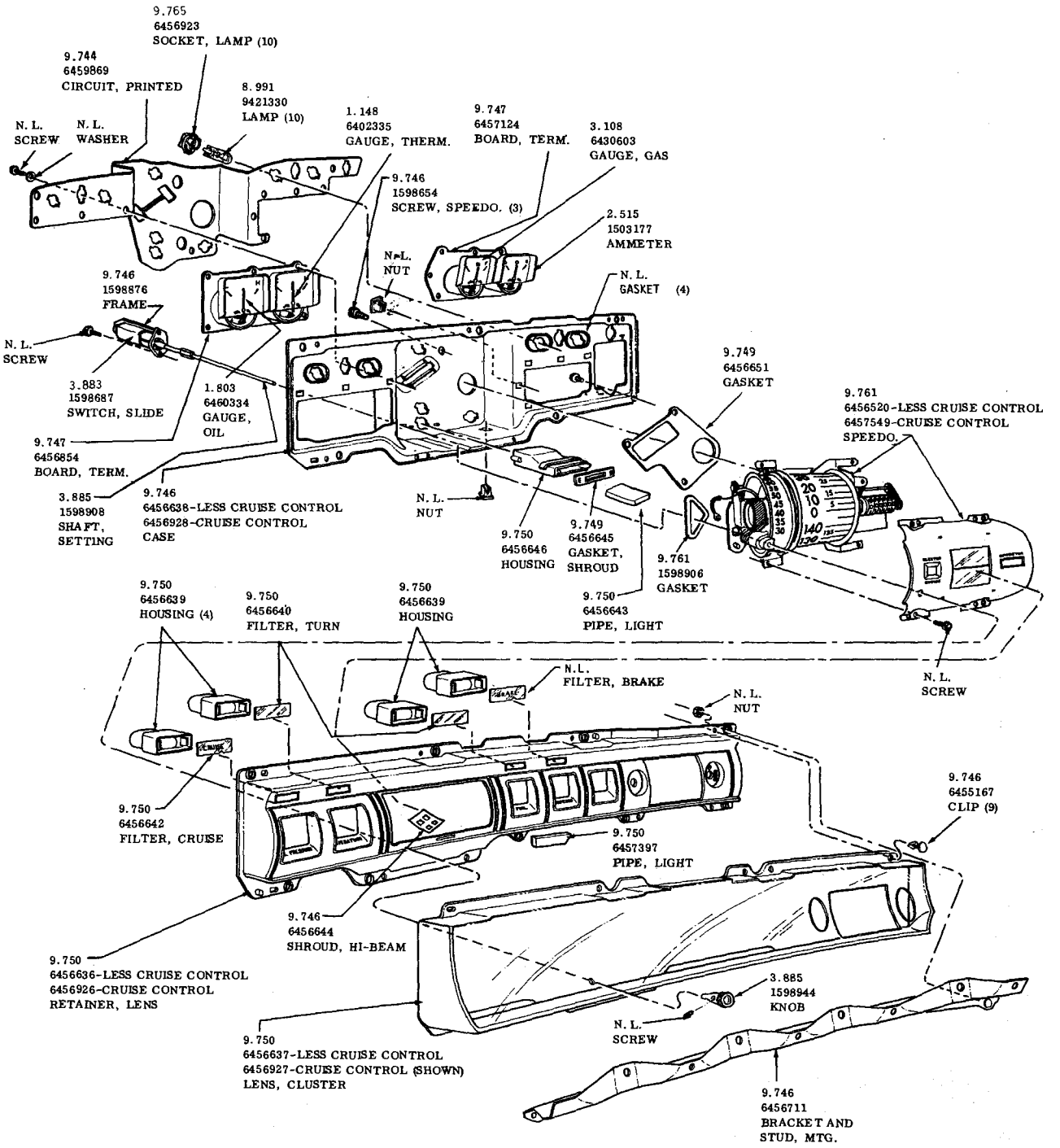

INSTRUMENT CLUSTER
1966-1967 — RIVIERA
(ELECTRO CRUISE CLUSTER SHOWN)

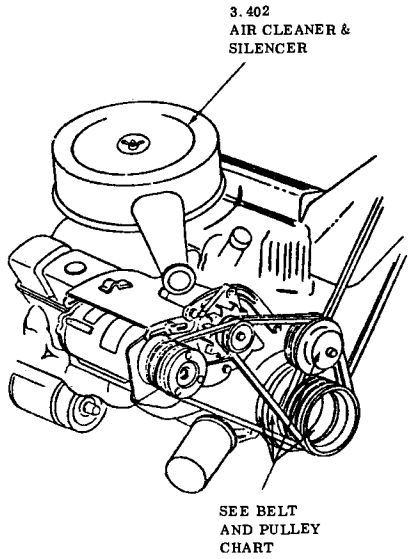

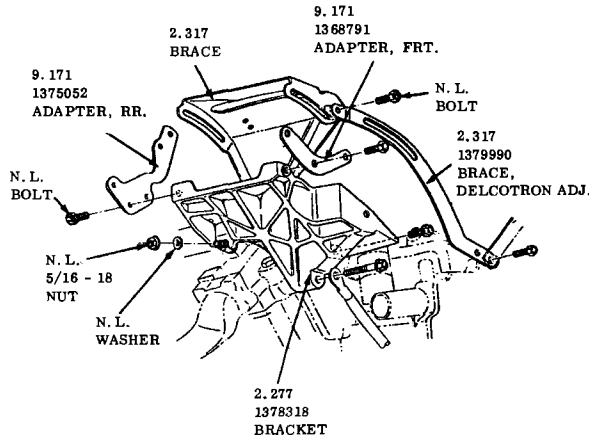

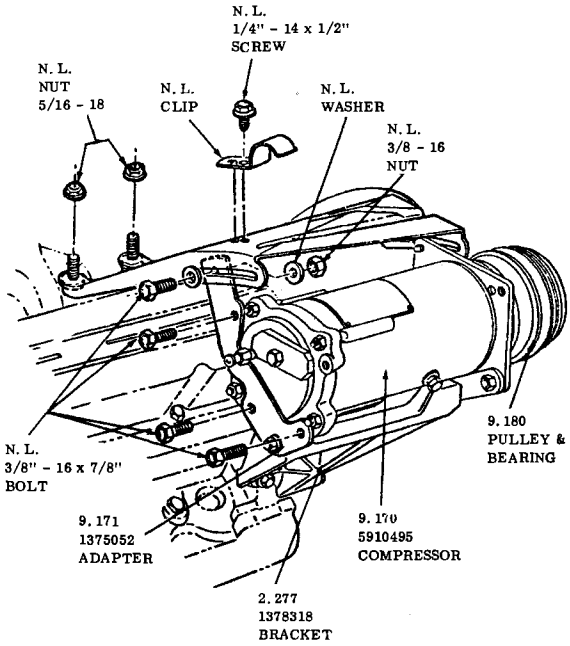

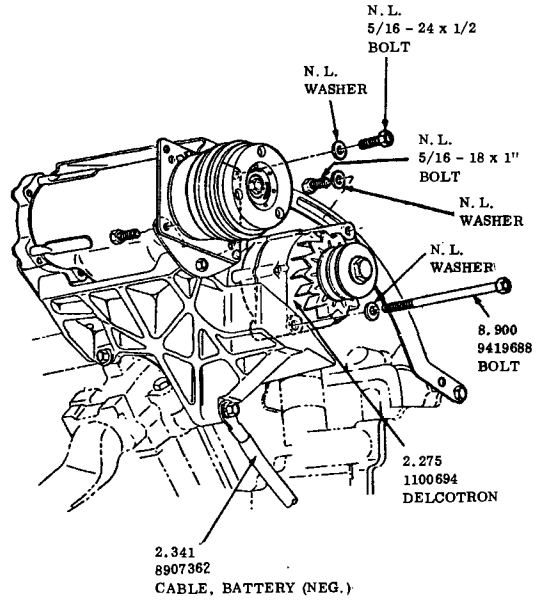

COMPRESSOR AND DELCOTRON MOUNTING

1967—ALL

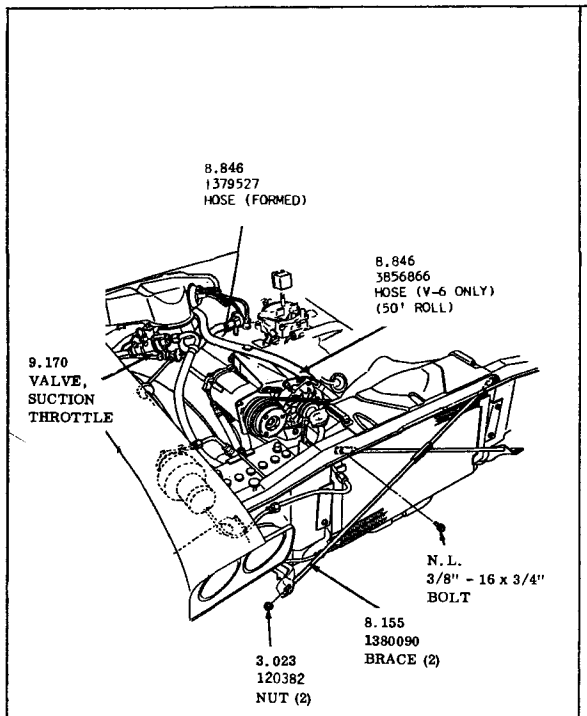

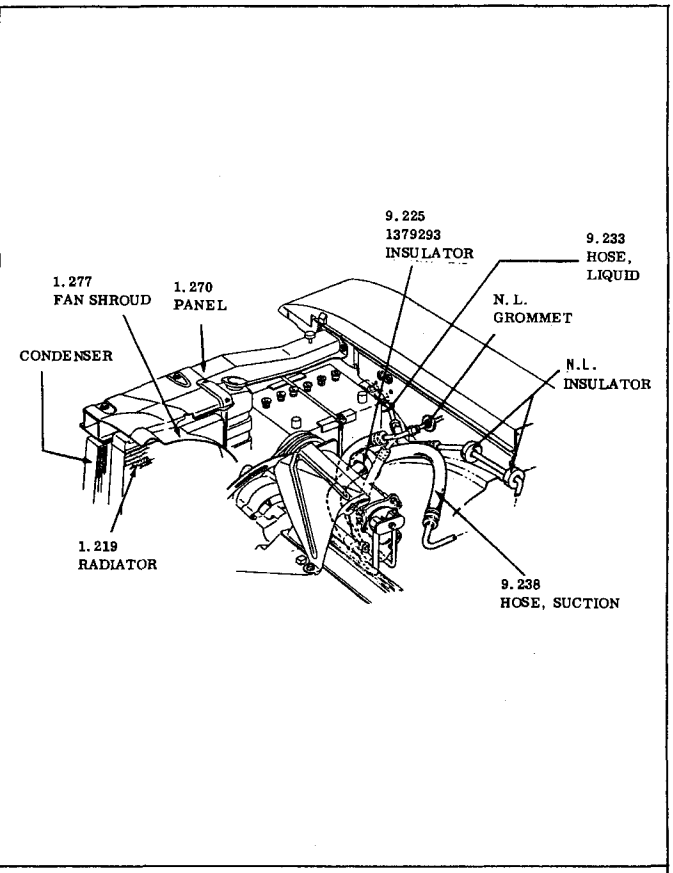

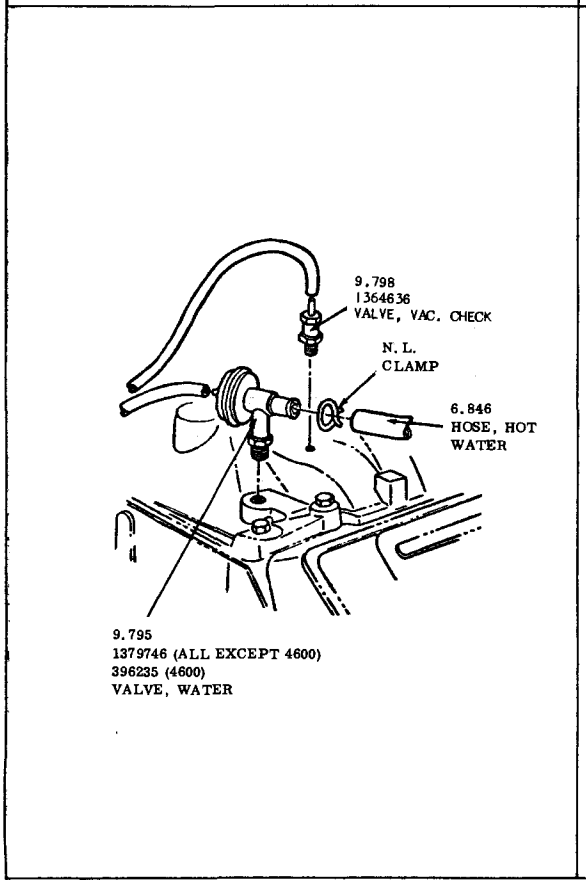

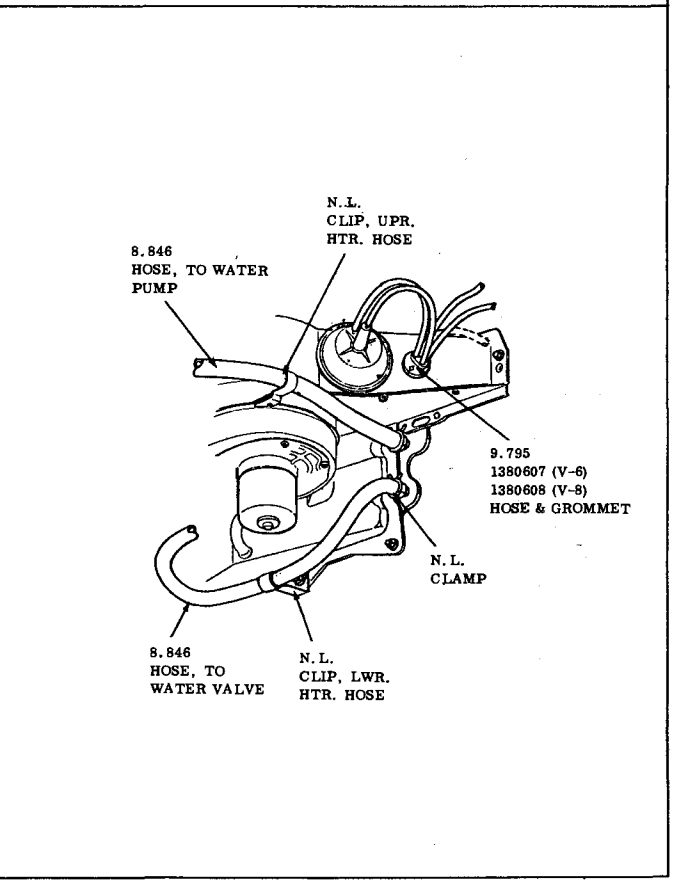

A.C. HOSES ENGINE UNIT
1967—SPECIAL—SKYLARK—G.S. 400

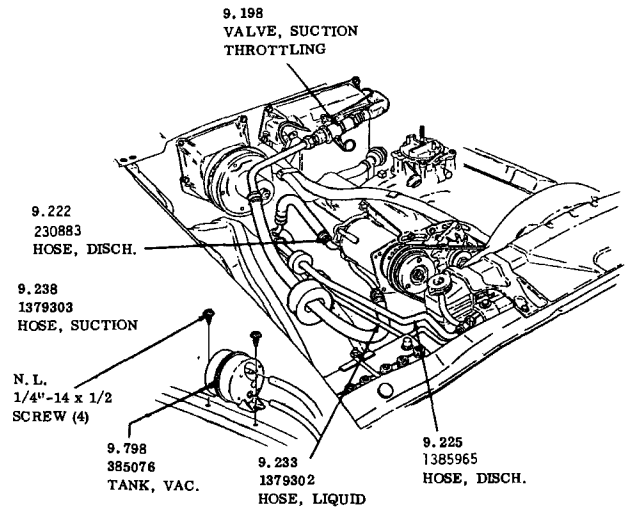

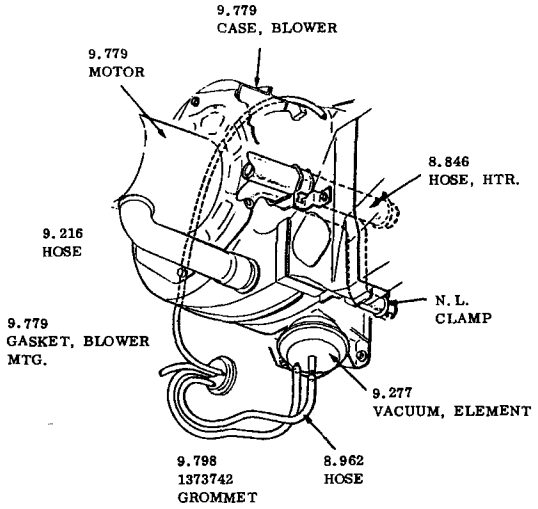

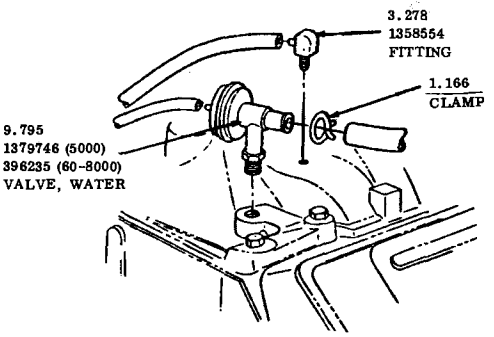

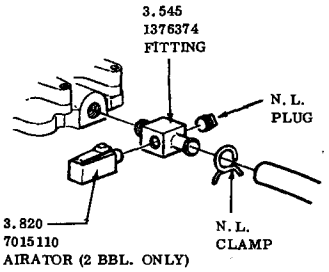

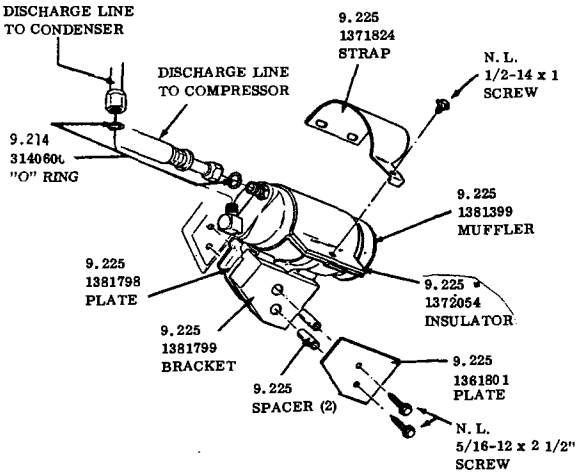

A.C. HOSES

1967—50—60—8000

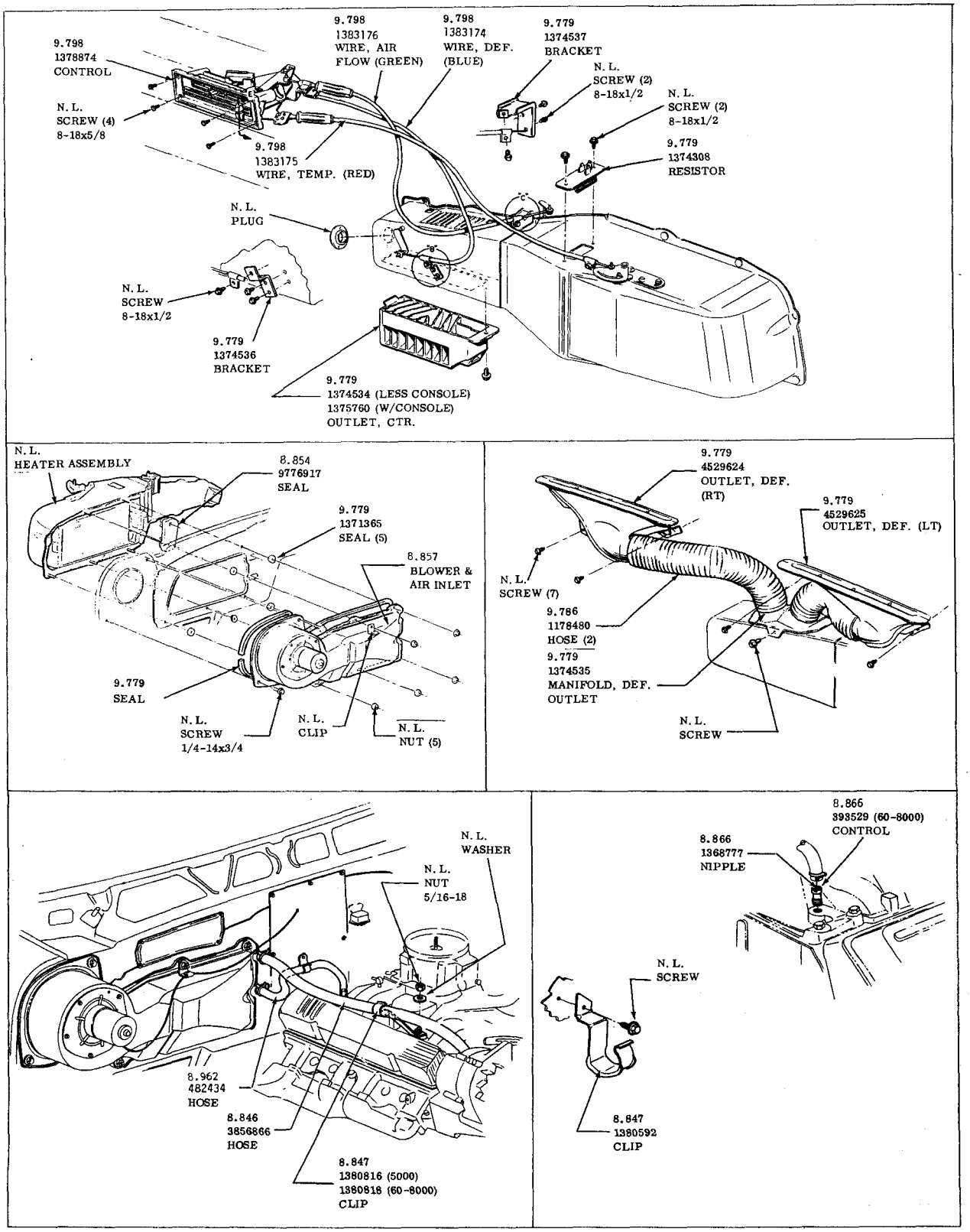

HEATER AND DEFROSTER

1967—LeSabre—Wildcat—Electra 225

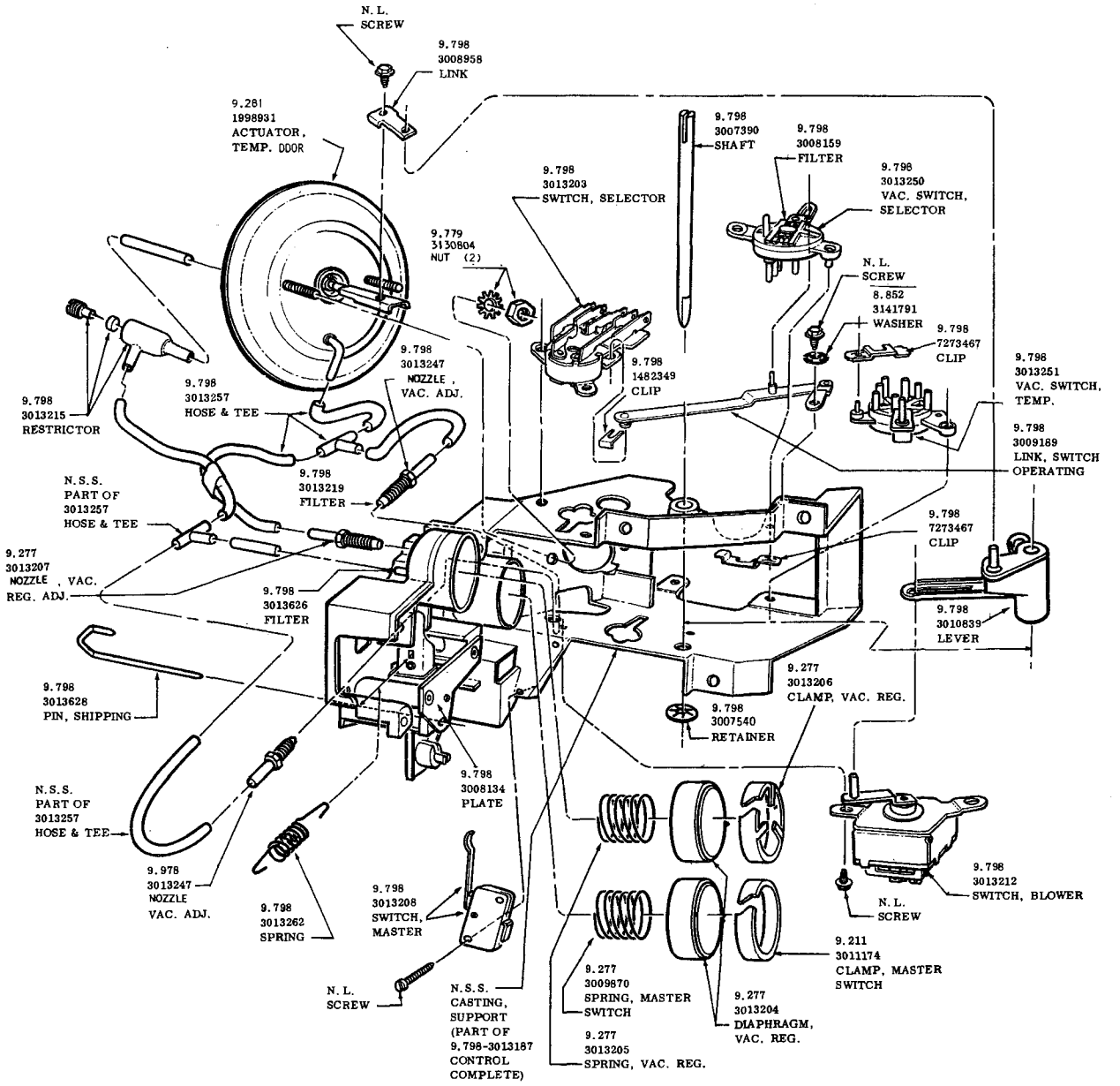

AUTOMATIC TEMPERATURE CONTROL
EXPLODED VIEW OF 9.798- 3021873
1967-50-60-8000 W/AUTO CLIMATE CONTROL
(SECOND TYPE)

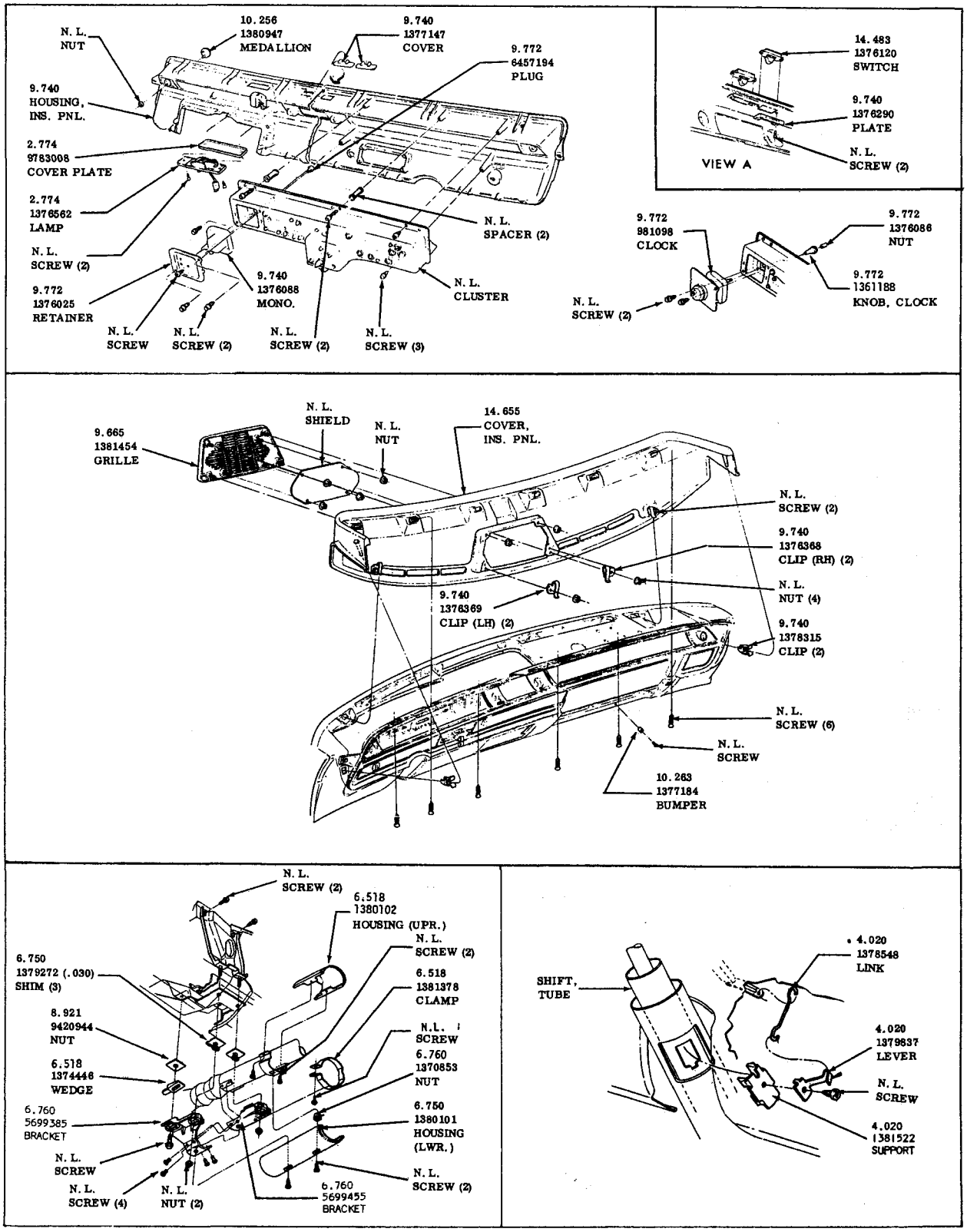

INSTRUMENT PANEL COVER AND HARDWARE
1967—LE SABRE— WILDCAT —ELECTRA 225

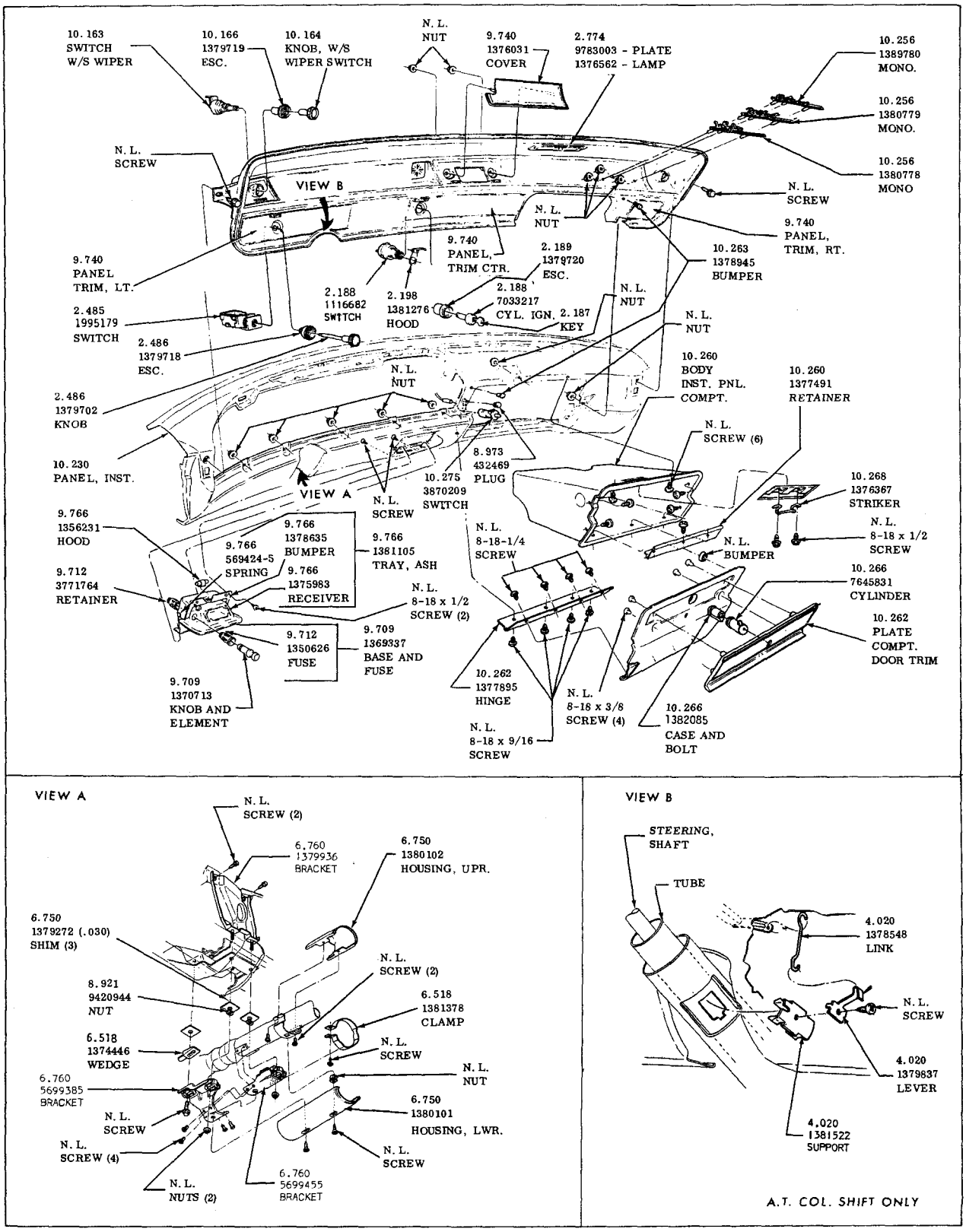

INSTRUMENT PANEL

1967—LE SABRE—WILDCAT—ELECTRA 225

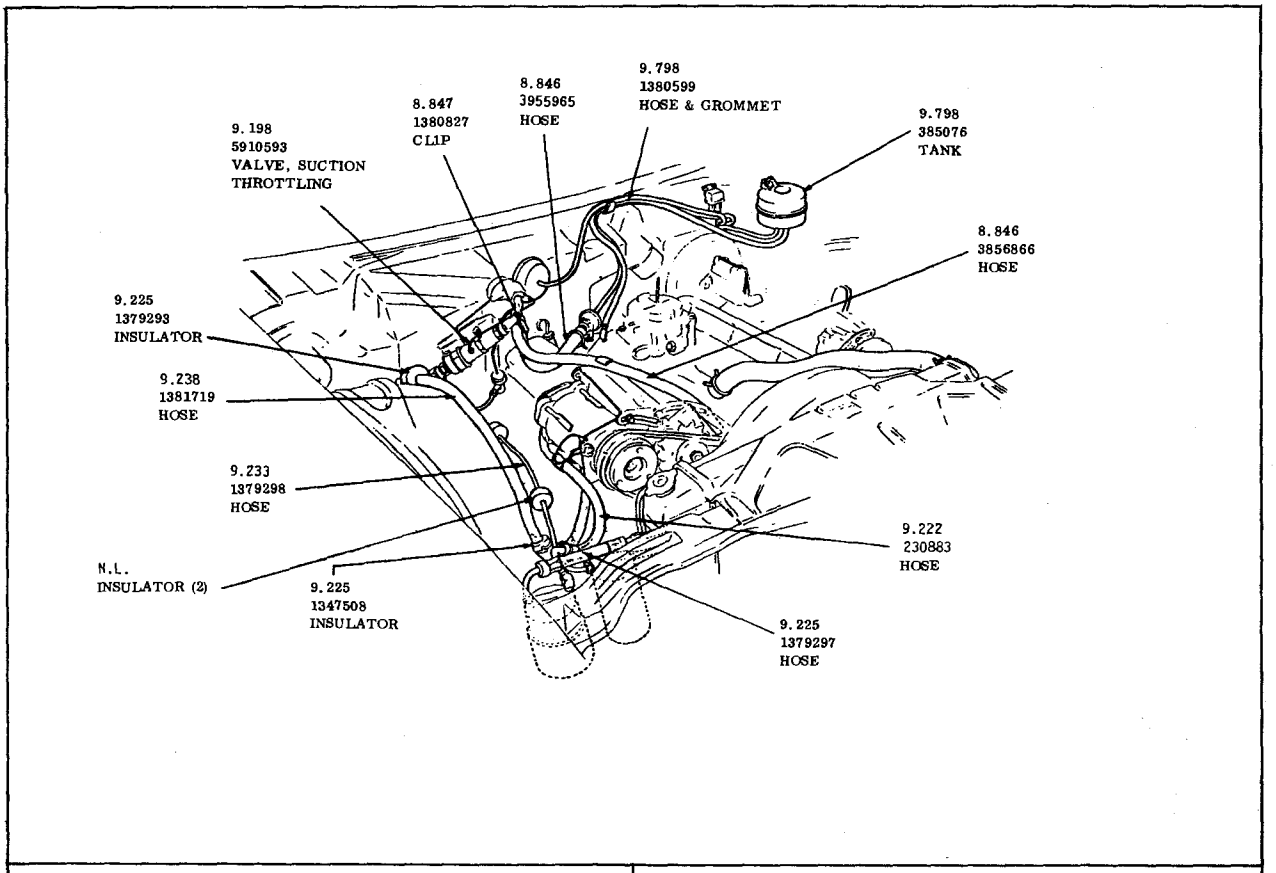

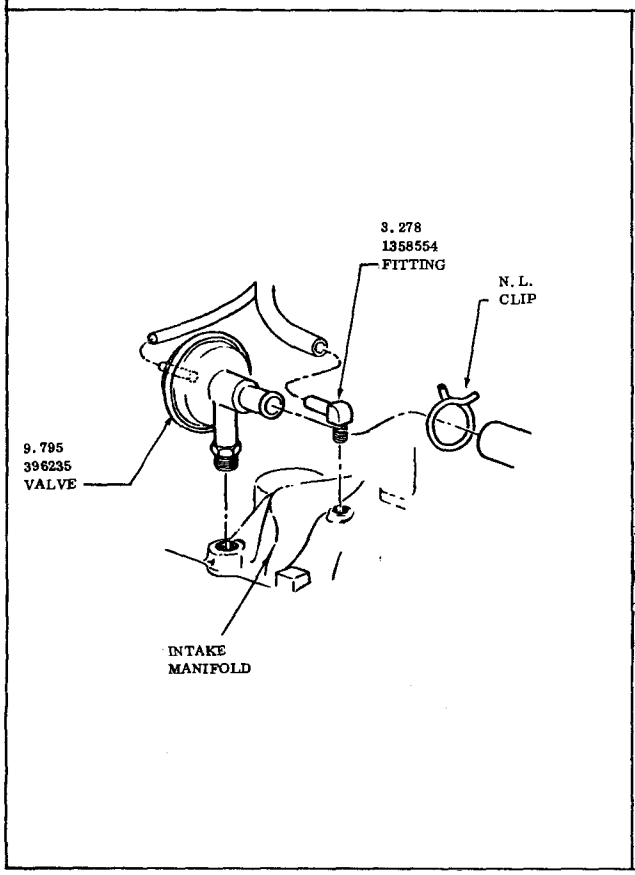

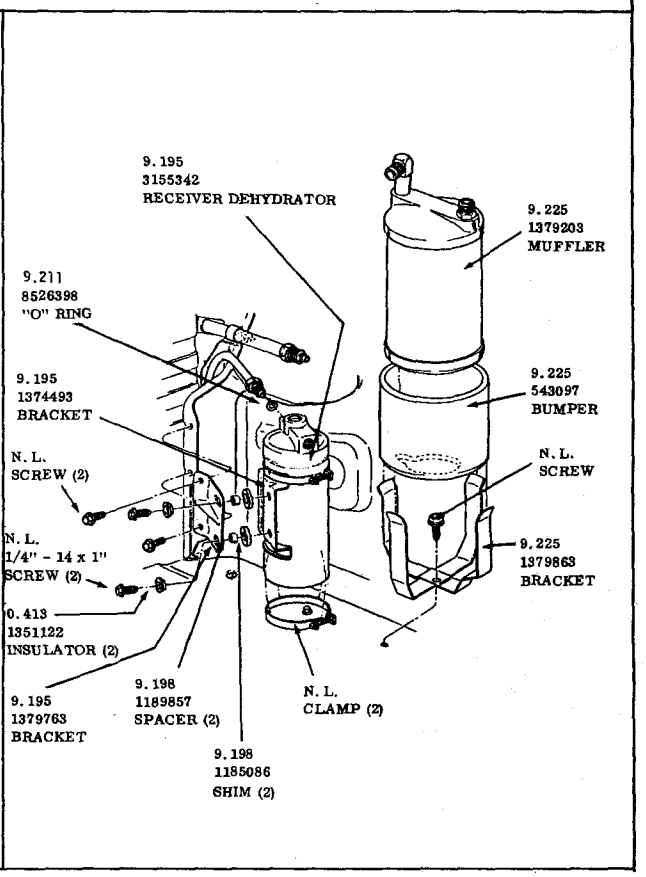

A.C. HOSES
1967—RIVIERA

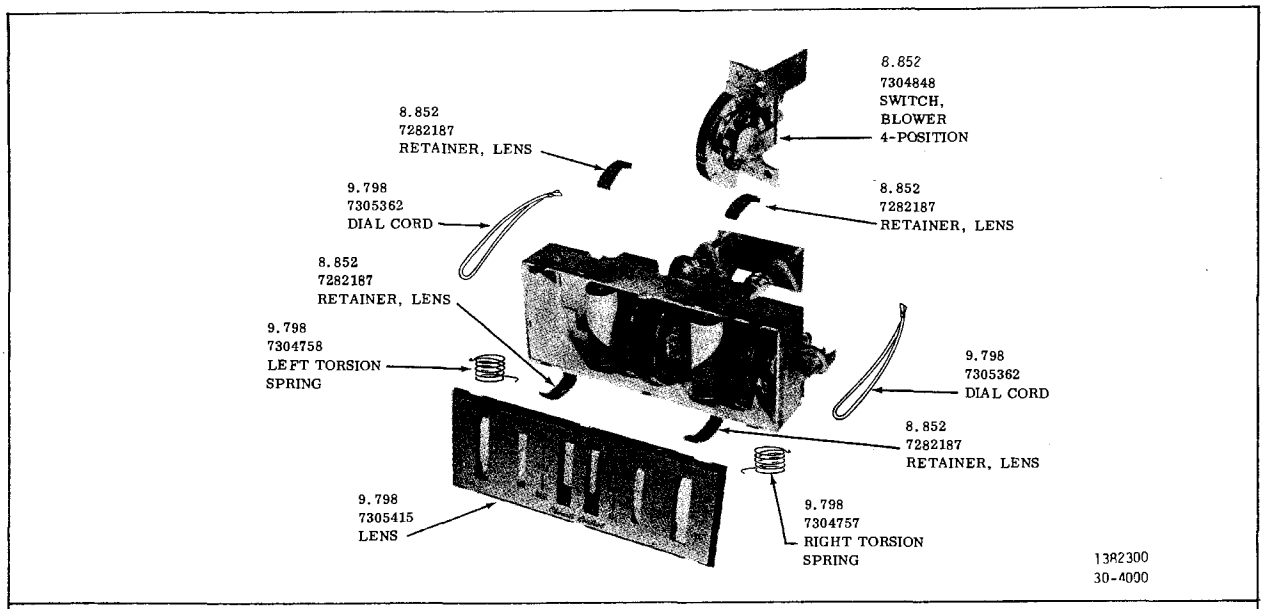

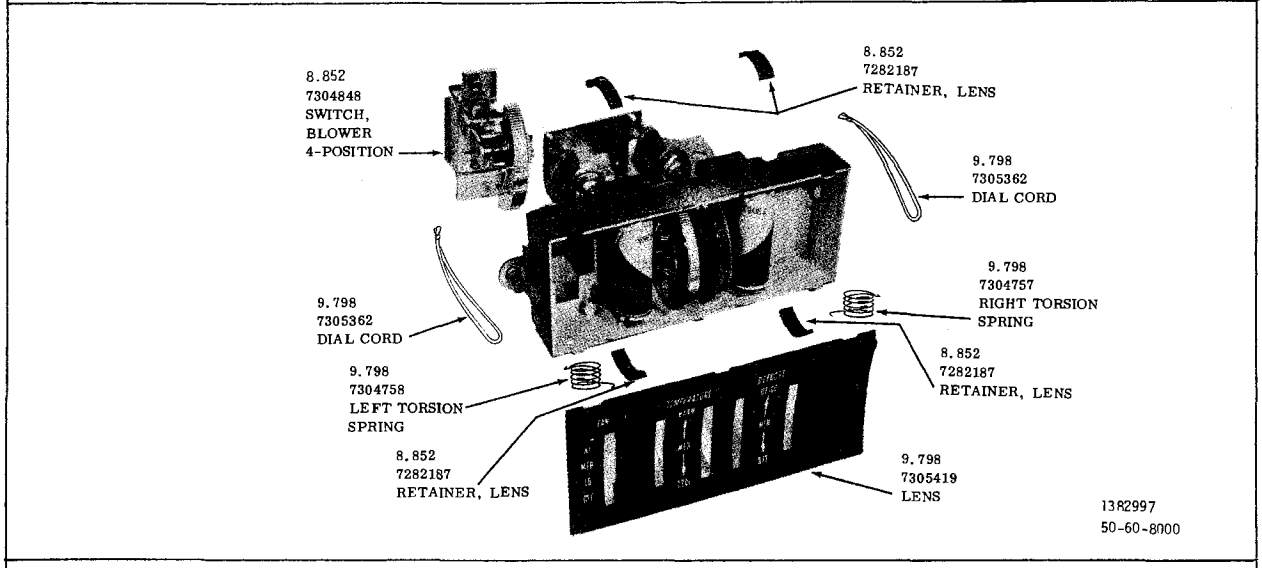

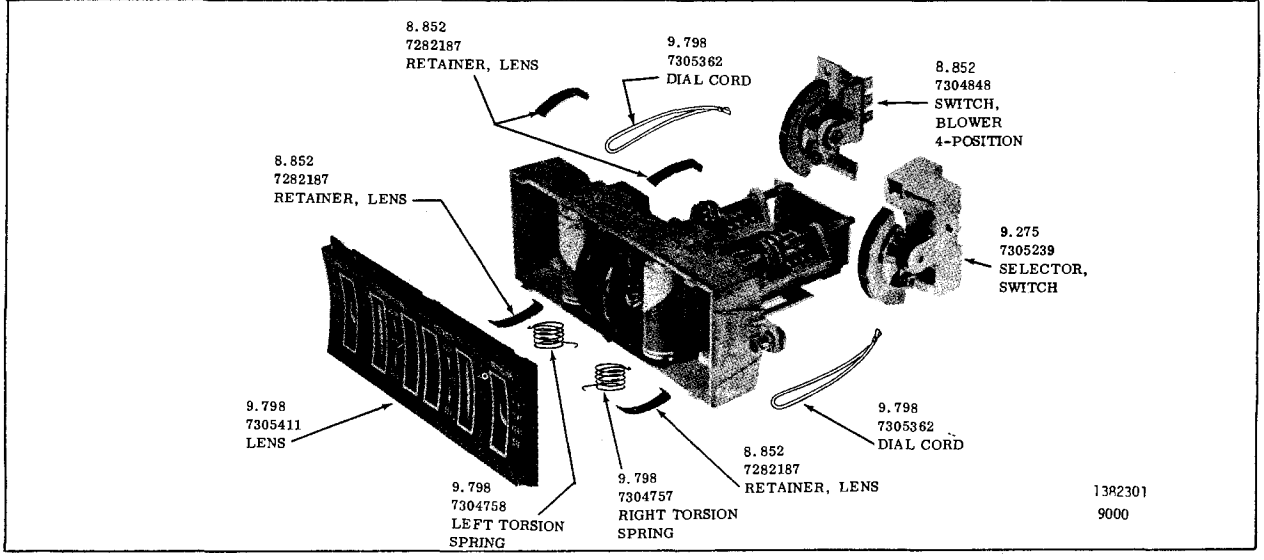

HEATER CONTROL
1968-ALL

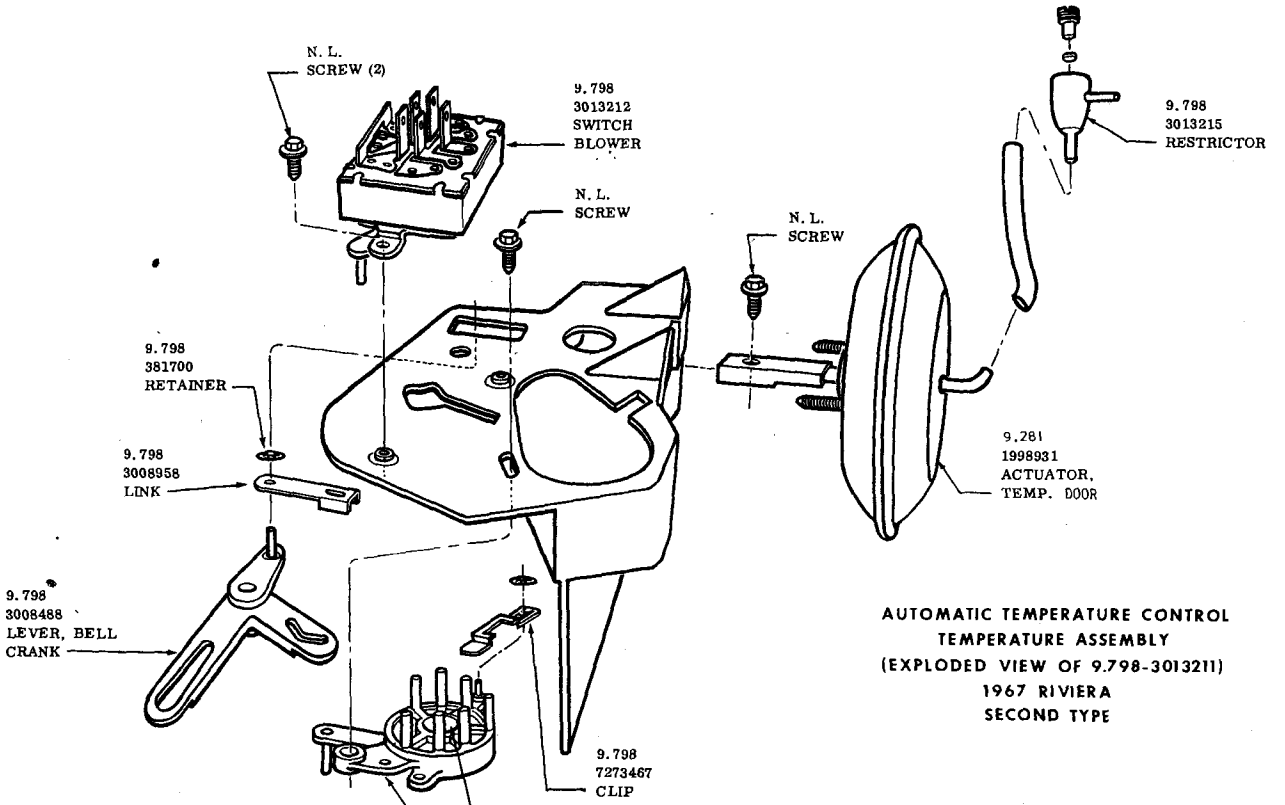

AUTOMATIC TEMPERATURE CONTROL
TEMPERATURE ASSEMBLY
(EXPLODED VIEW OF 9.798-3013211)
1967 RIVIERA
SECOND TYPE

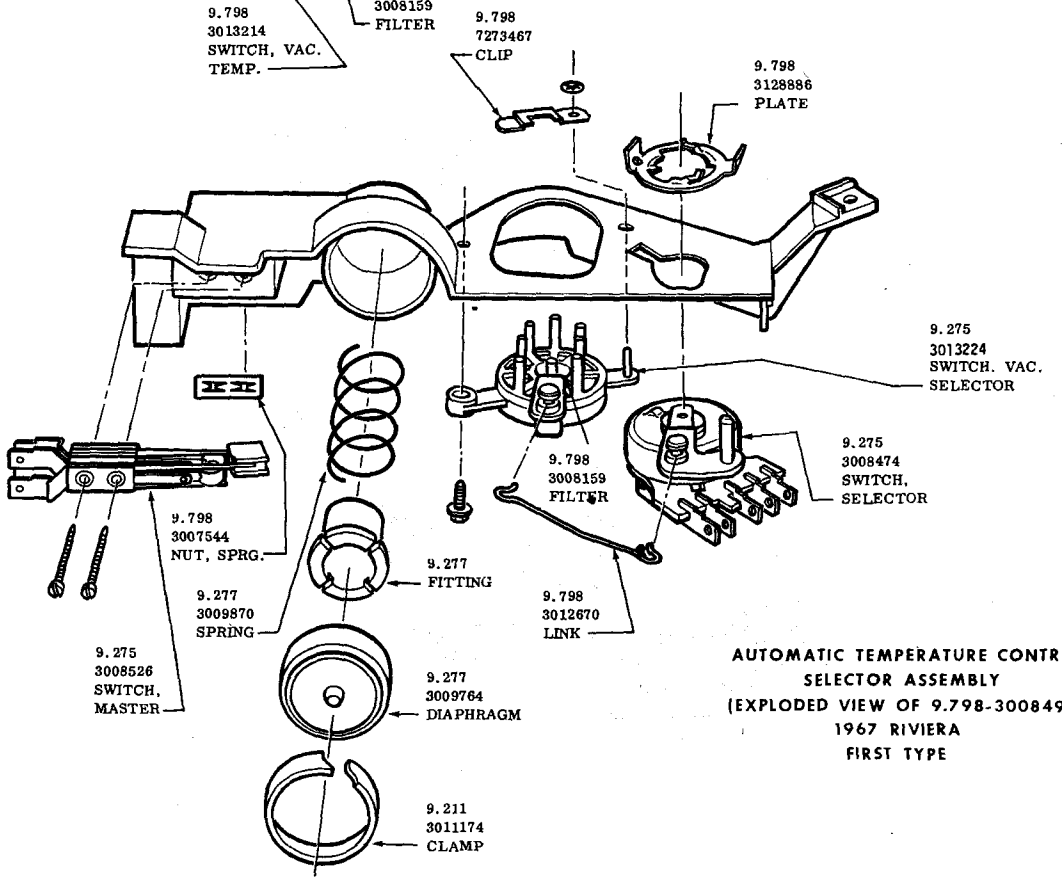

AUTOMATIC TEMPERATURE CONTROL
SELECTOR ASSEMBLY
(EXPLODED VIEW OF 9.798-3008497)
1967 RIVIERA
FIRST TYPE

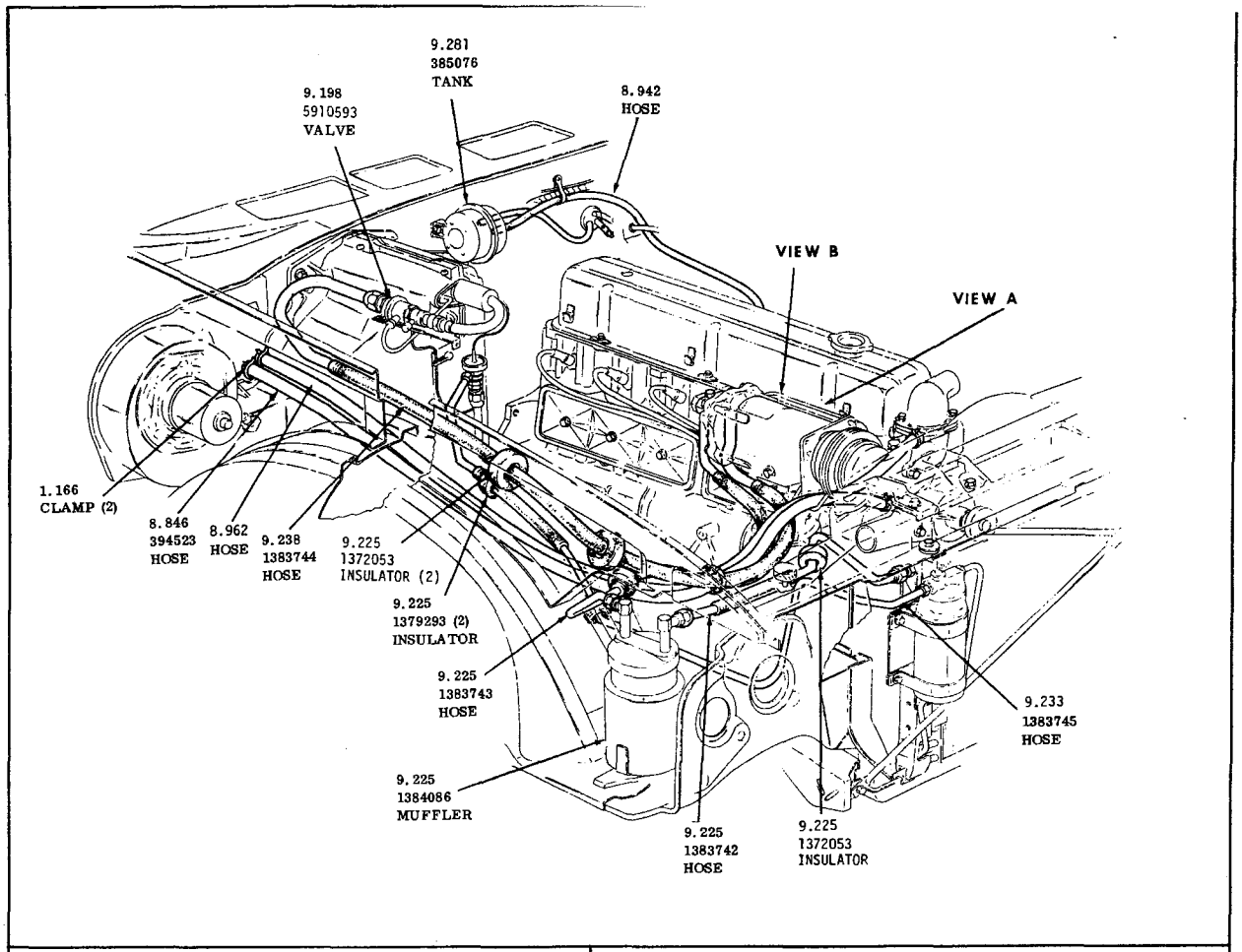

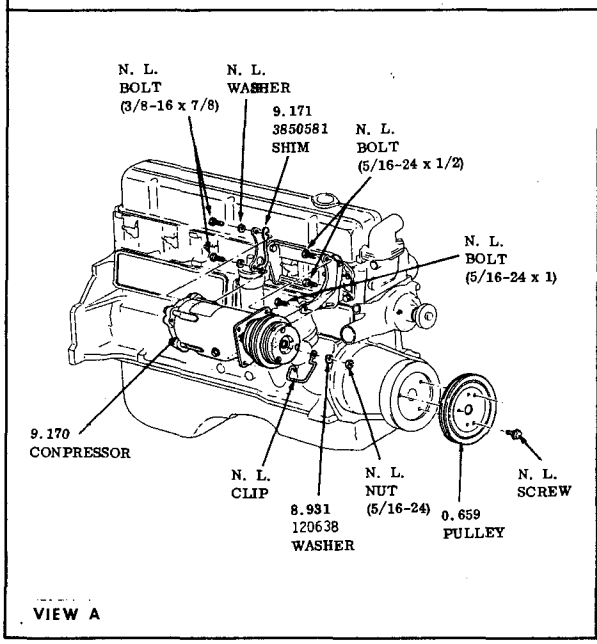

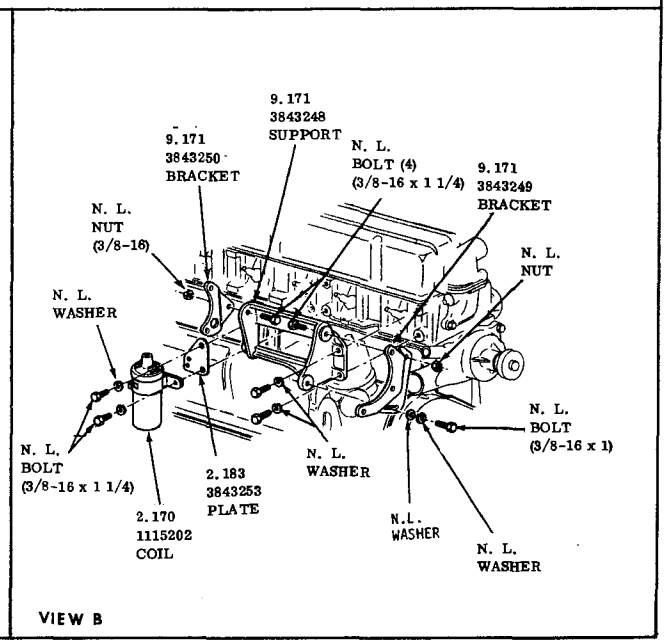

AIR CONDITION HOSE & COMPRESSOR
1968-1971 - L-6 250 CU. IN. ENGINE

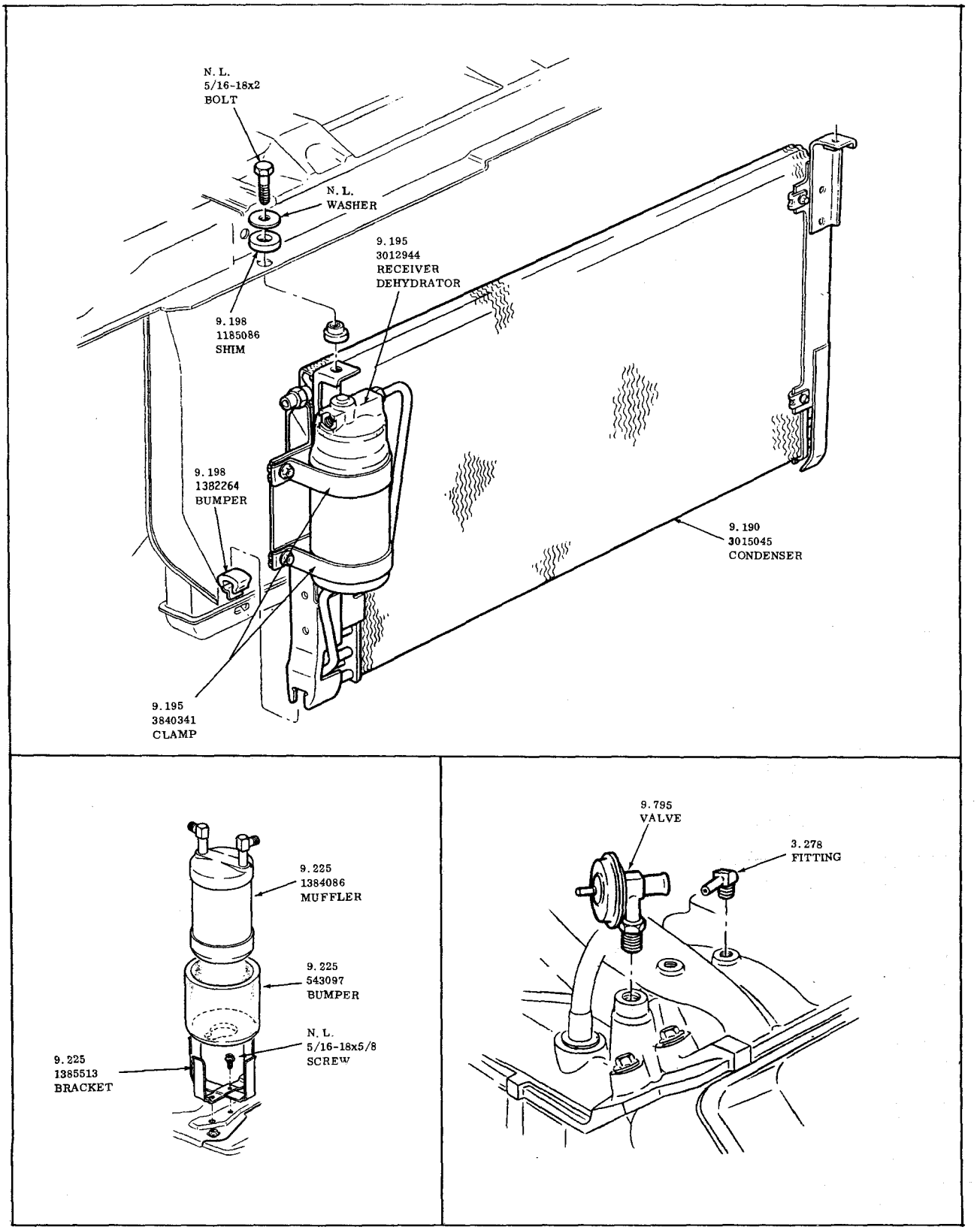

A/C RECEIVER DEHYDRATOR, MUFFLER & WATER VALVE

1968 - 30-4000

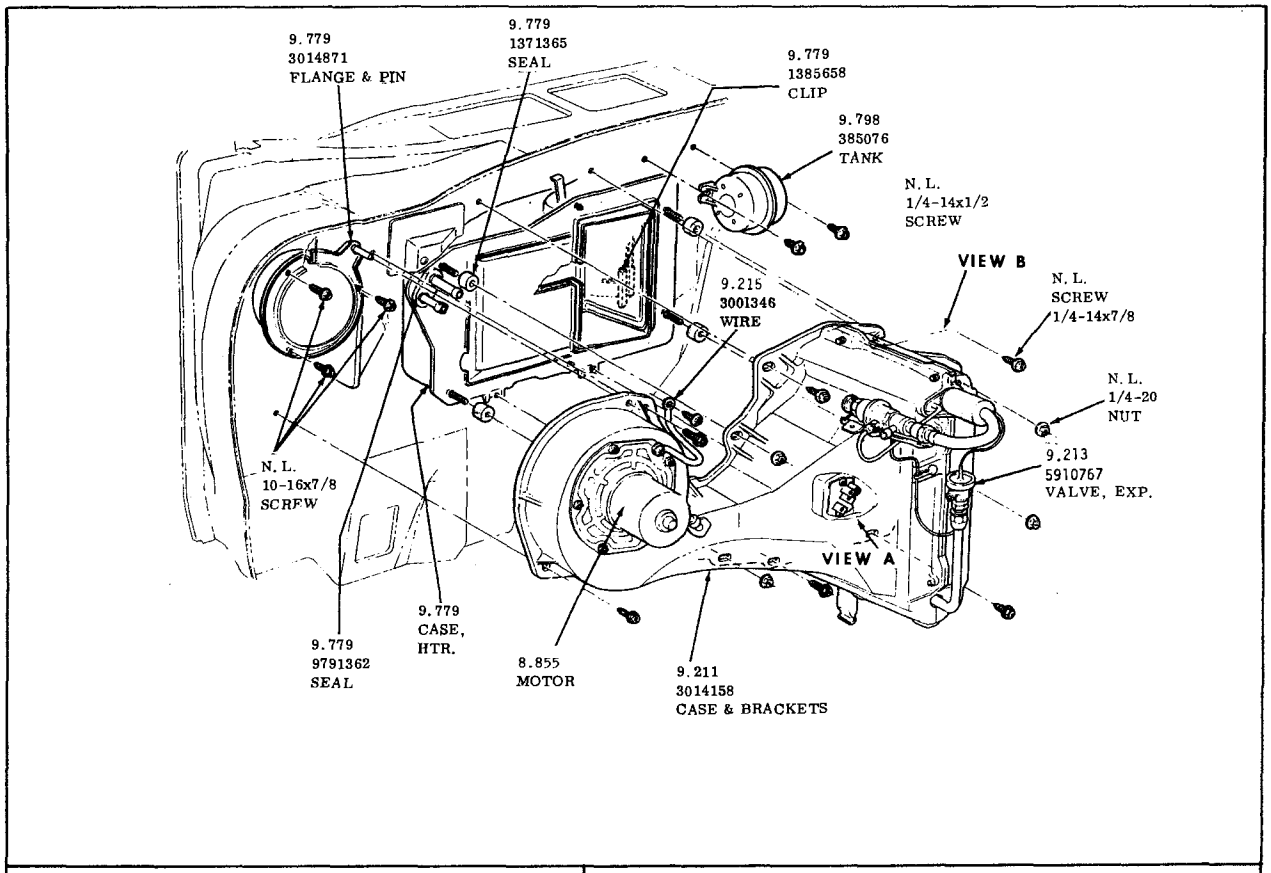

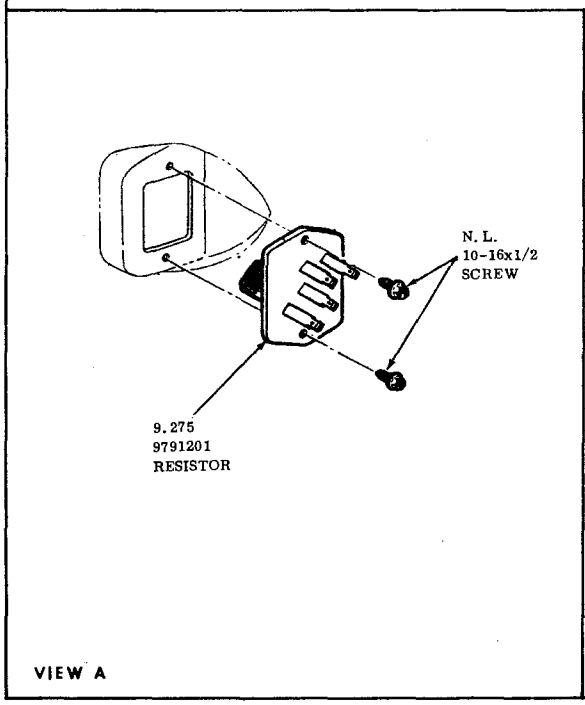

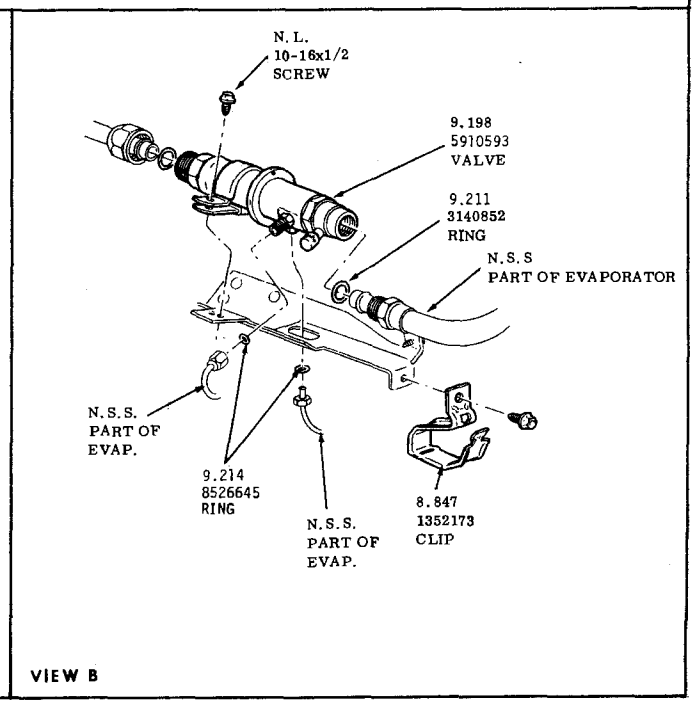

AIR CONDITIONING EVAPORATOR & BLOWER
1968 - 30-4000

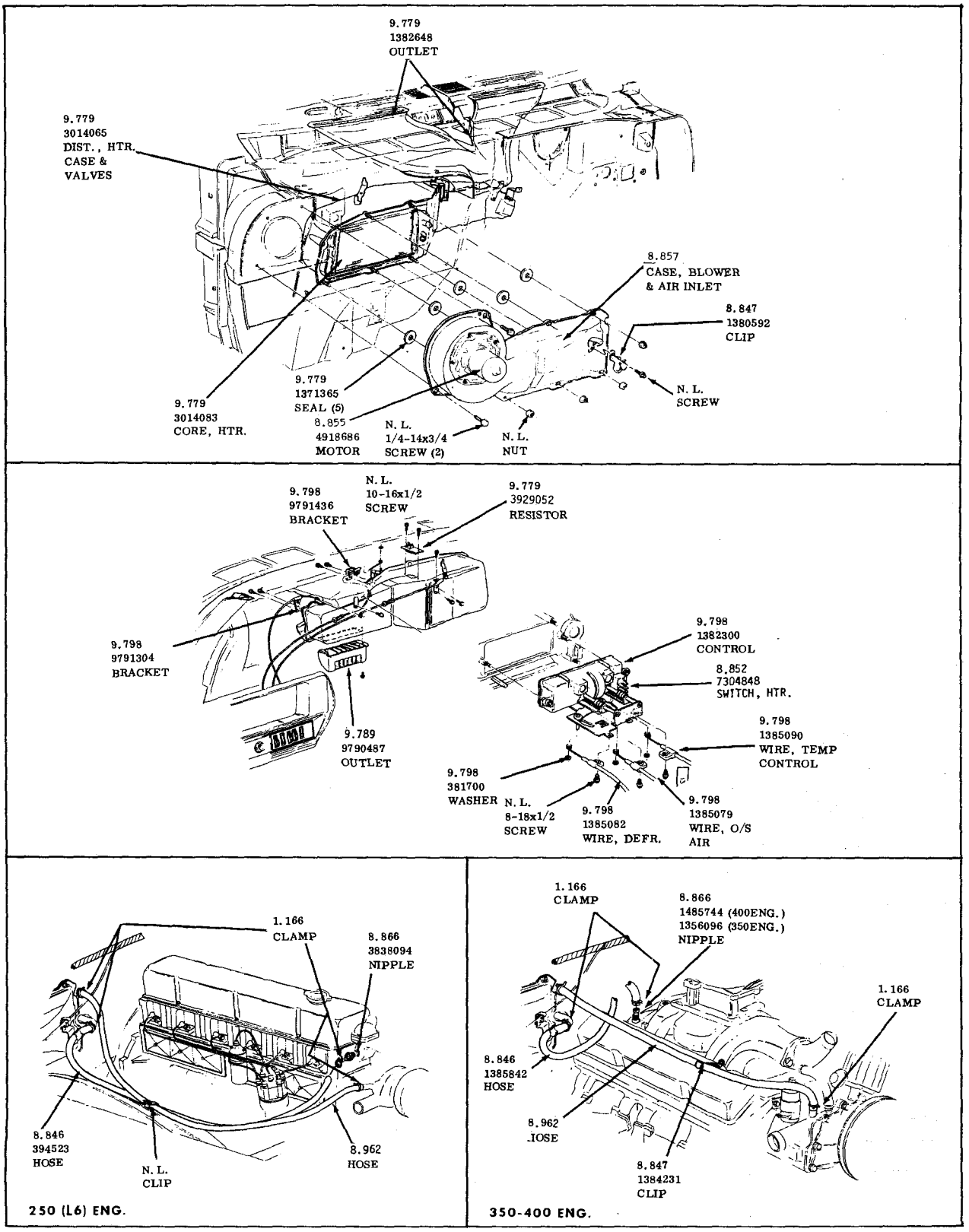

HEATER & DEFROSTER
1968 - 30-4000

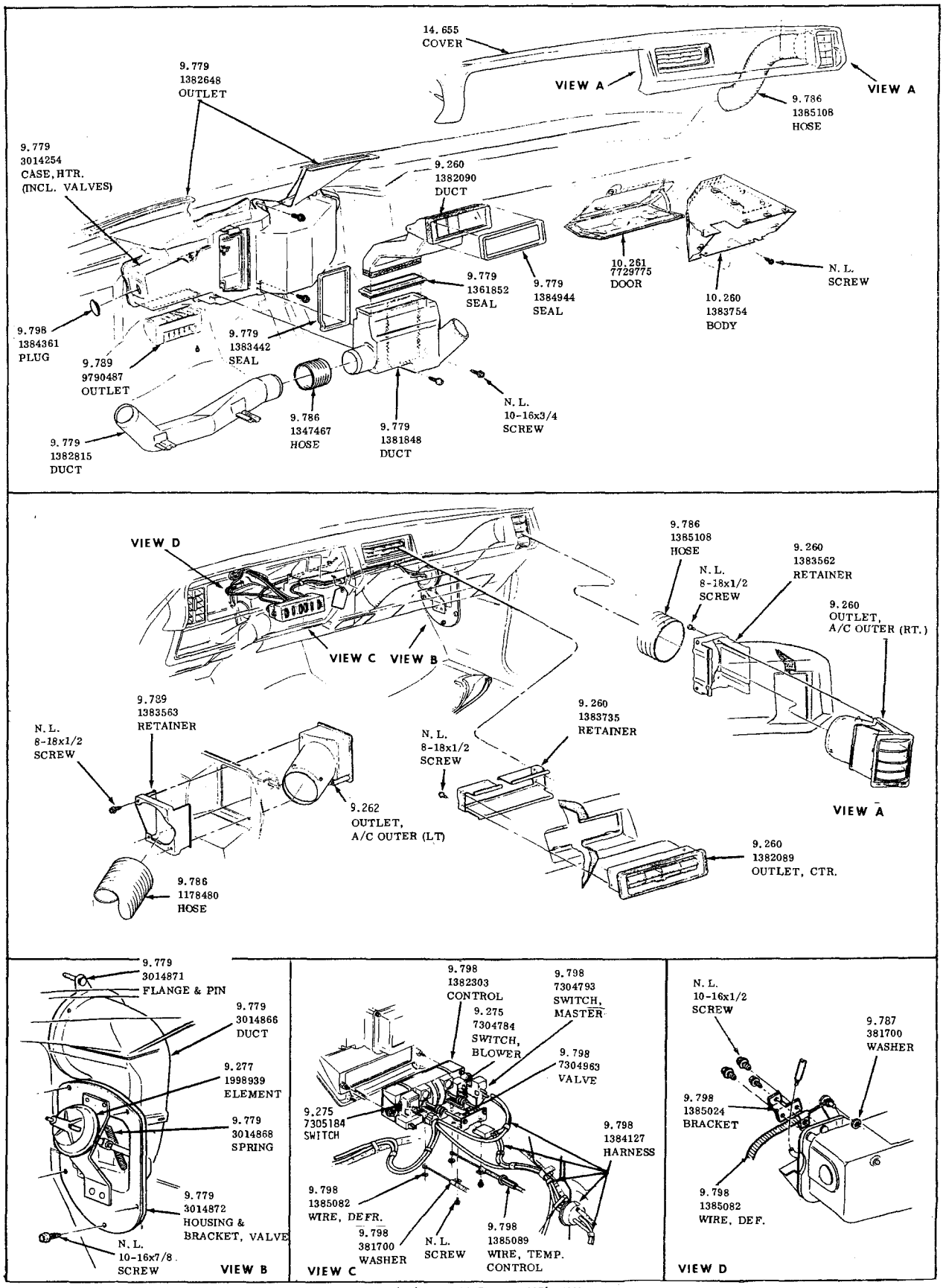

A/C INSTRUMENT PANEL UNITS
1968 - 30 -4000

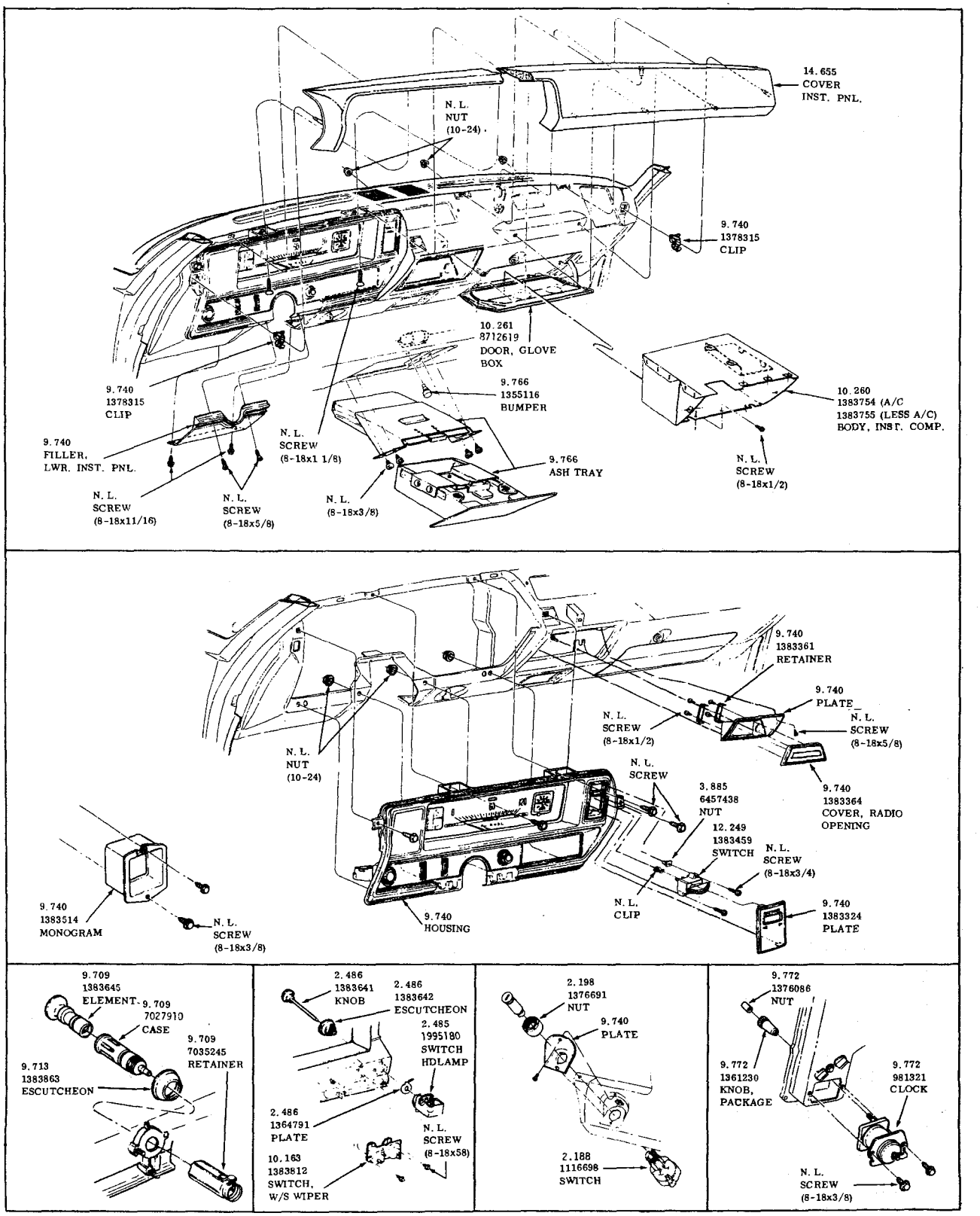

INSTRUMENT PANEL
1968-1969 - 30-4000

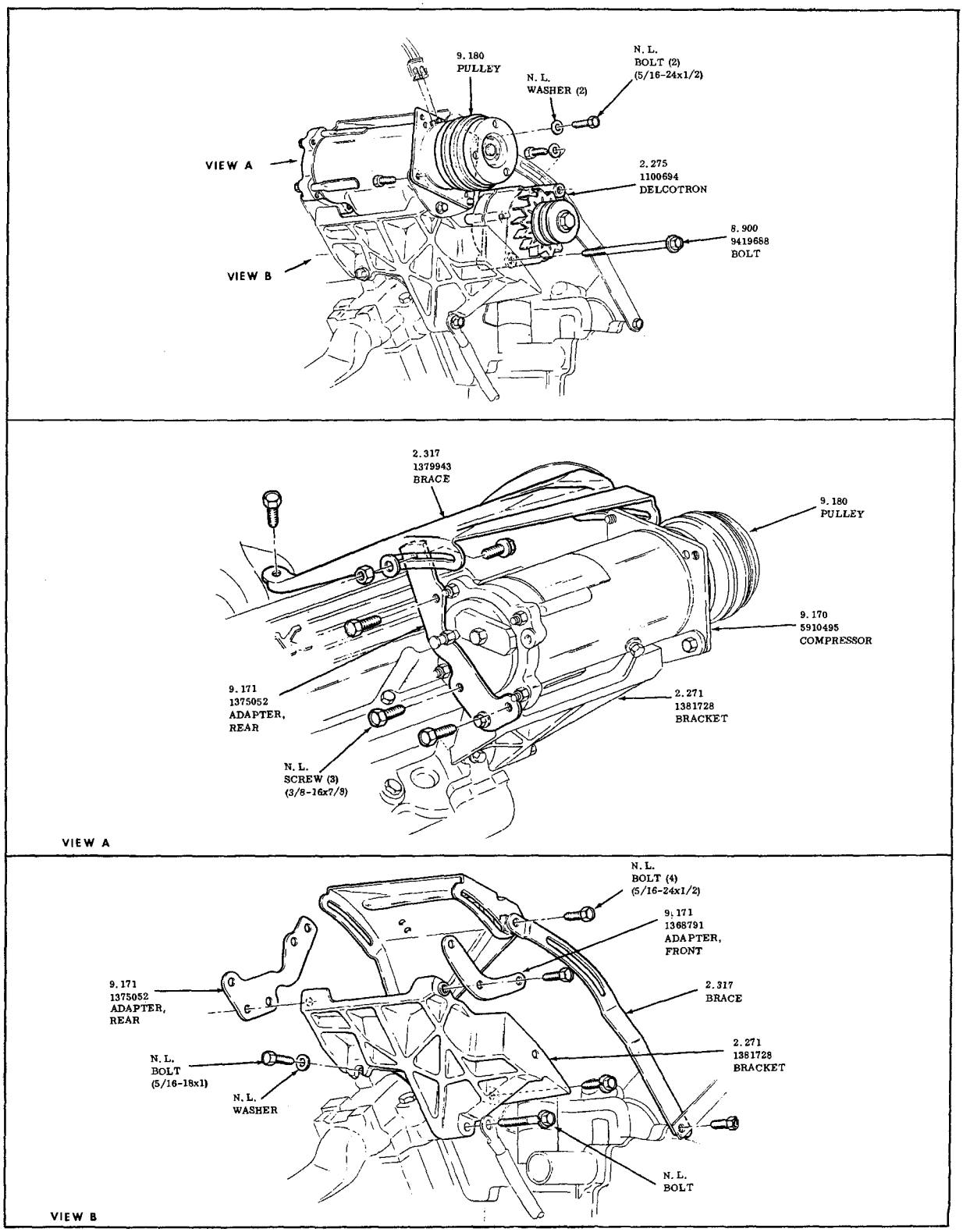

AIR CONDITIONING COMPRESSOR MOUNTING
1968-50-60-8000

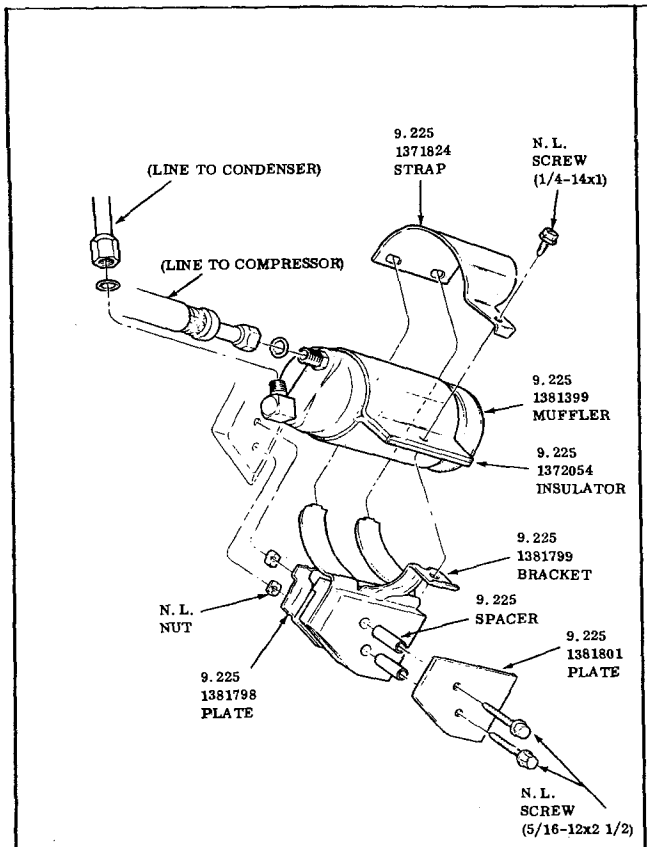

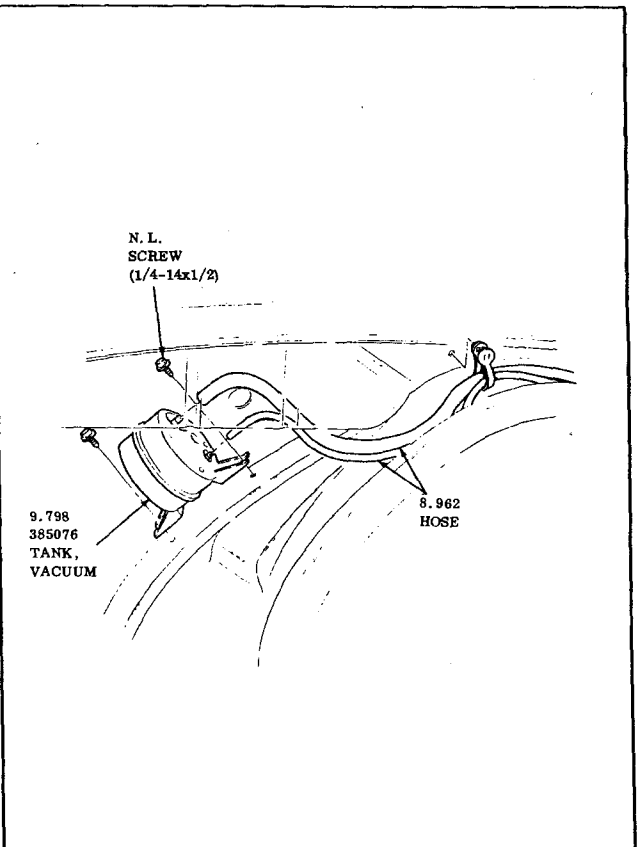

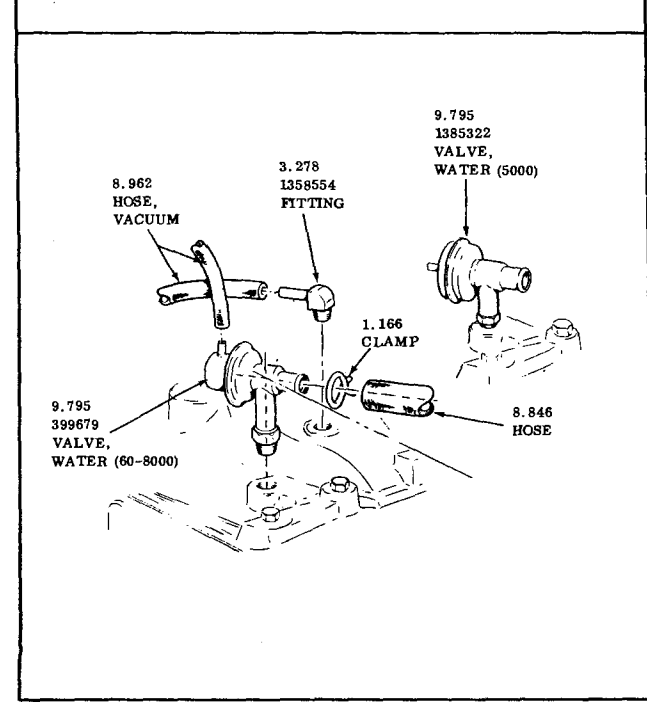

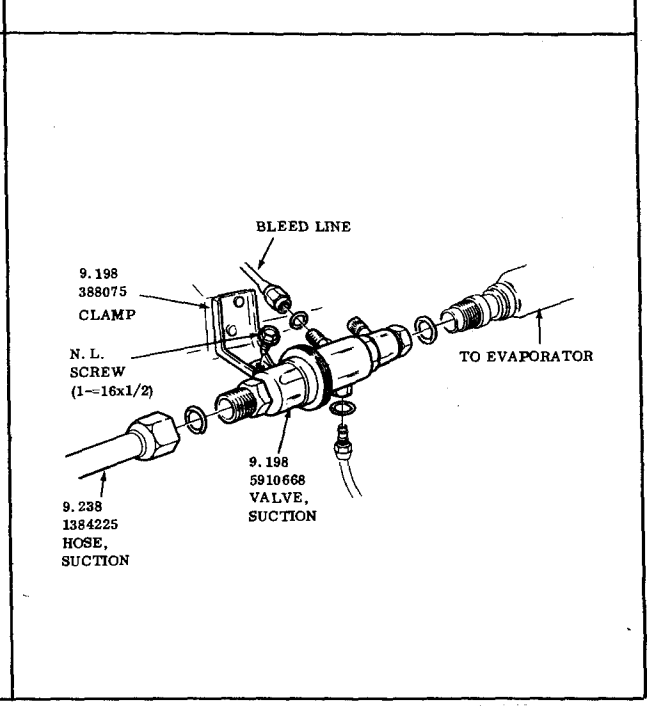

AIR CONDITIONING ENGINE UNITS
1968-50-60-8000

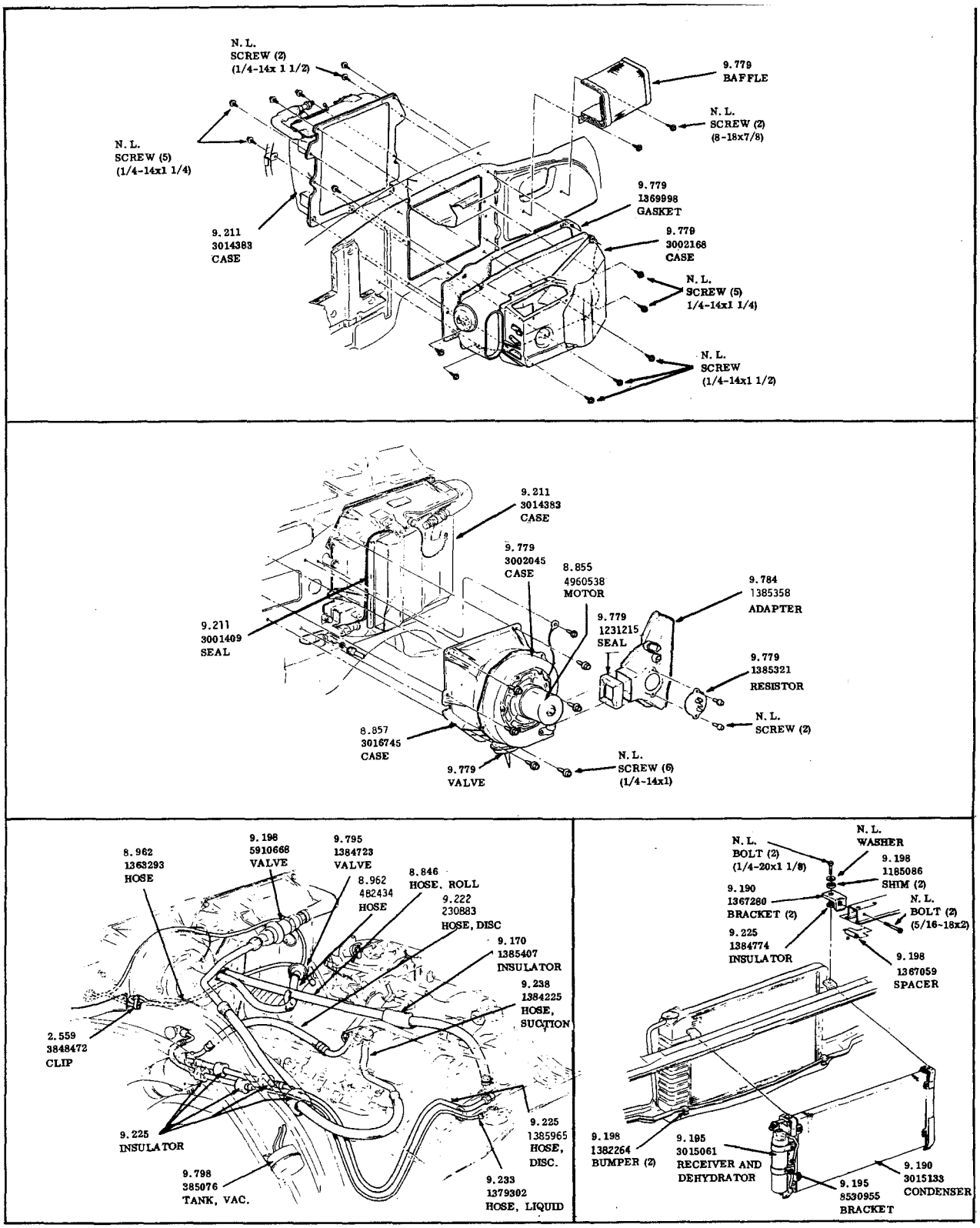

AIR CONDITIONING DASH UNITS
1968-50-60-8000

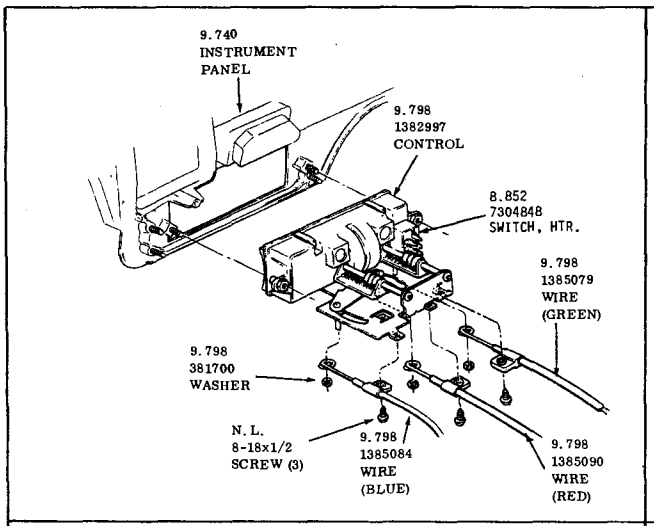

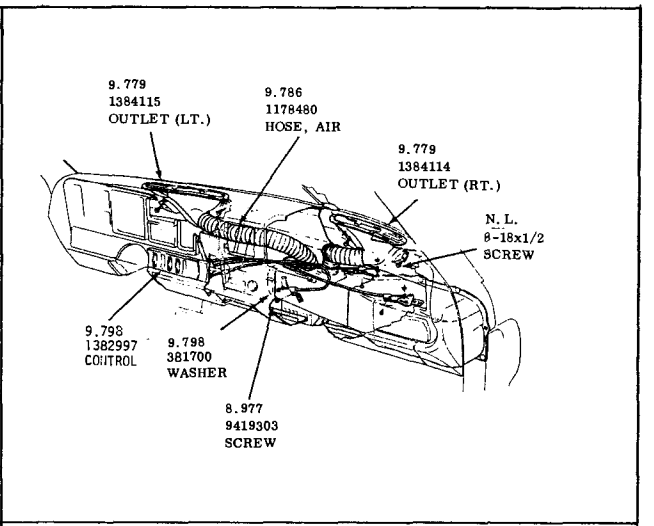

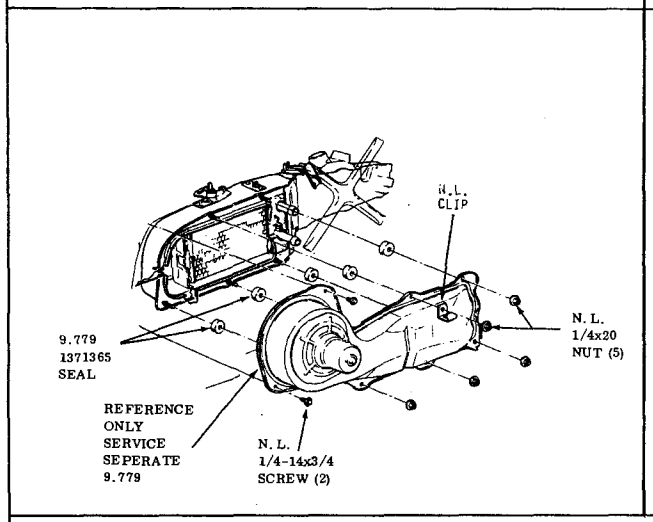

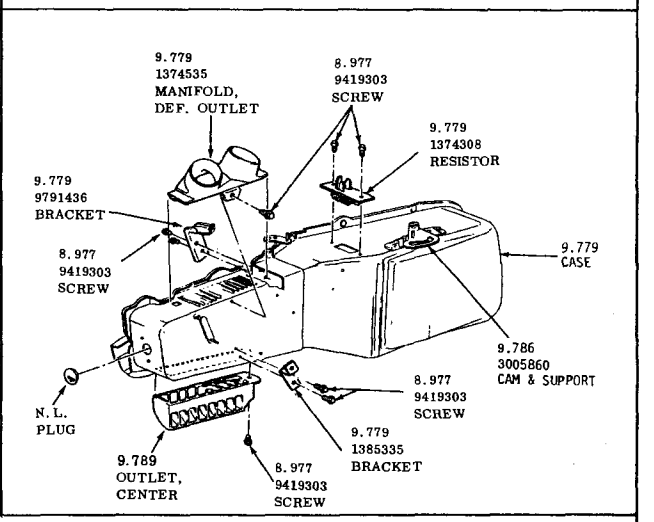

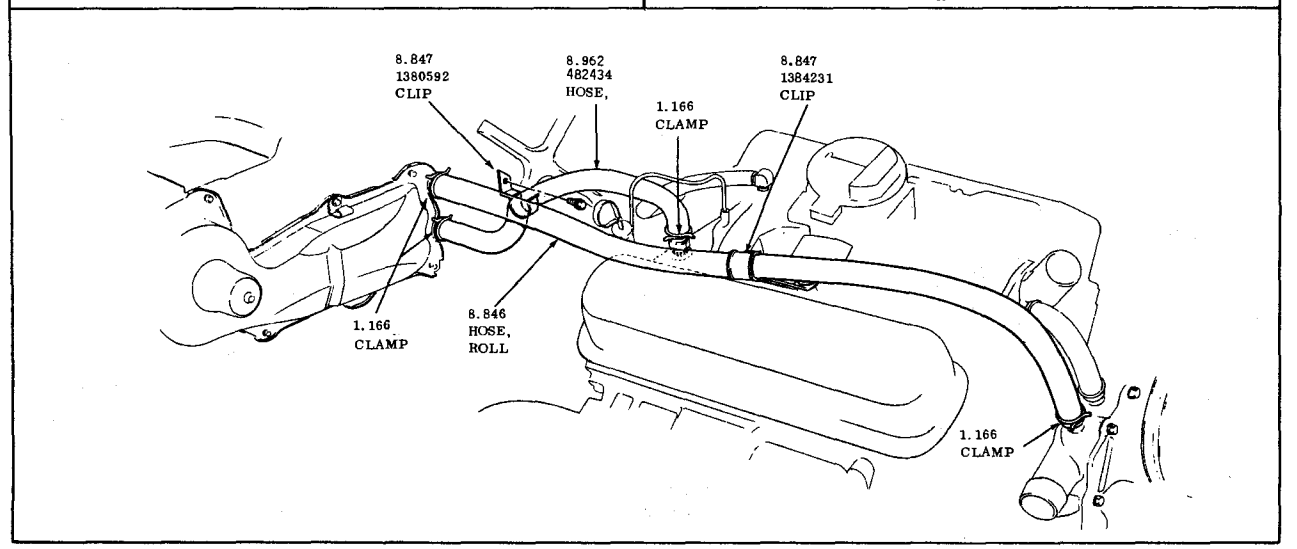

HEATER & DEFROSTER
1968 - 50-60-8000

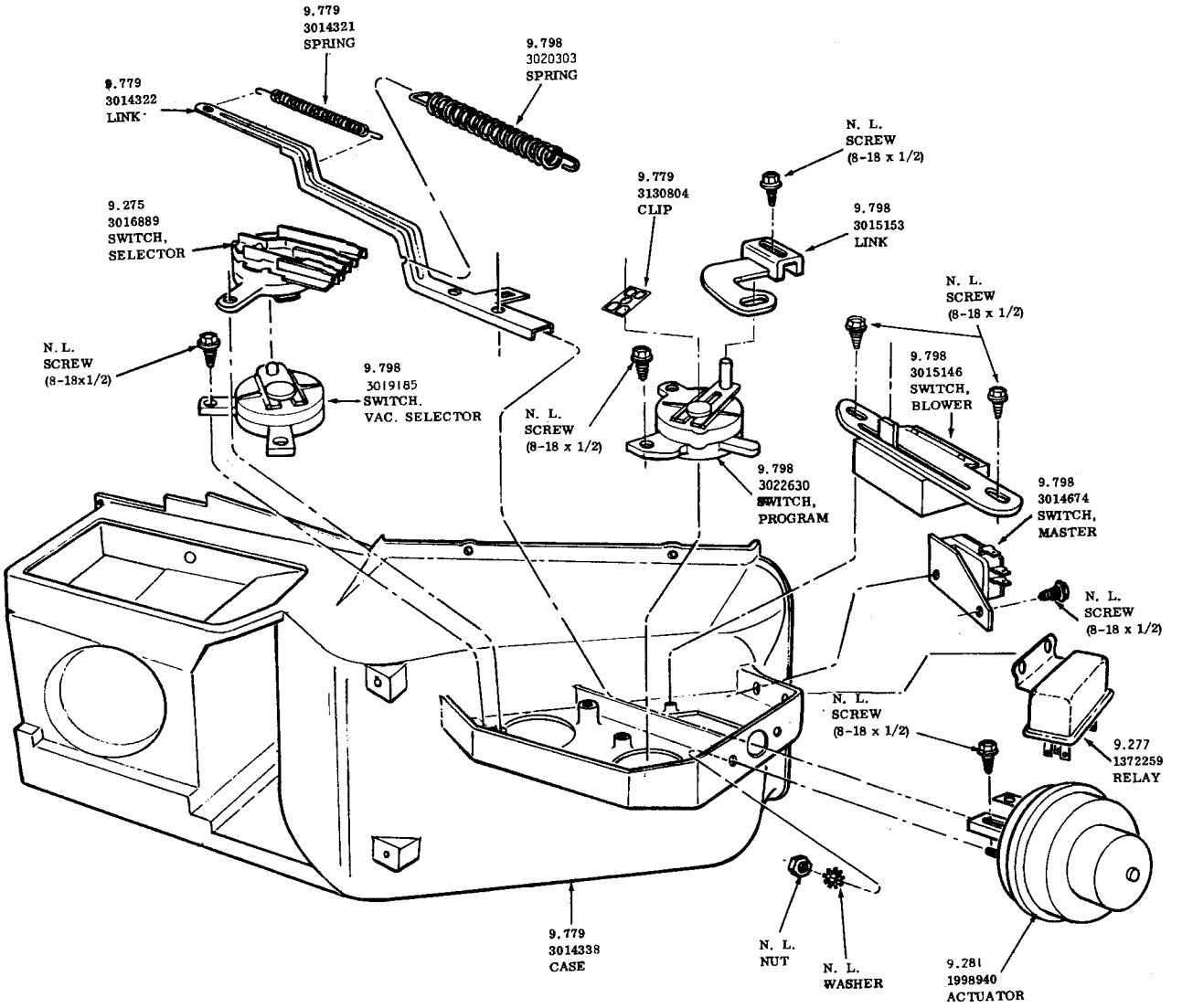

AUTOMATIC CLIMATIC CONTROL
1968 - LESABBRA - WILDCAT - ELECTRA 225

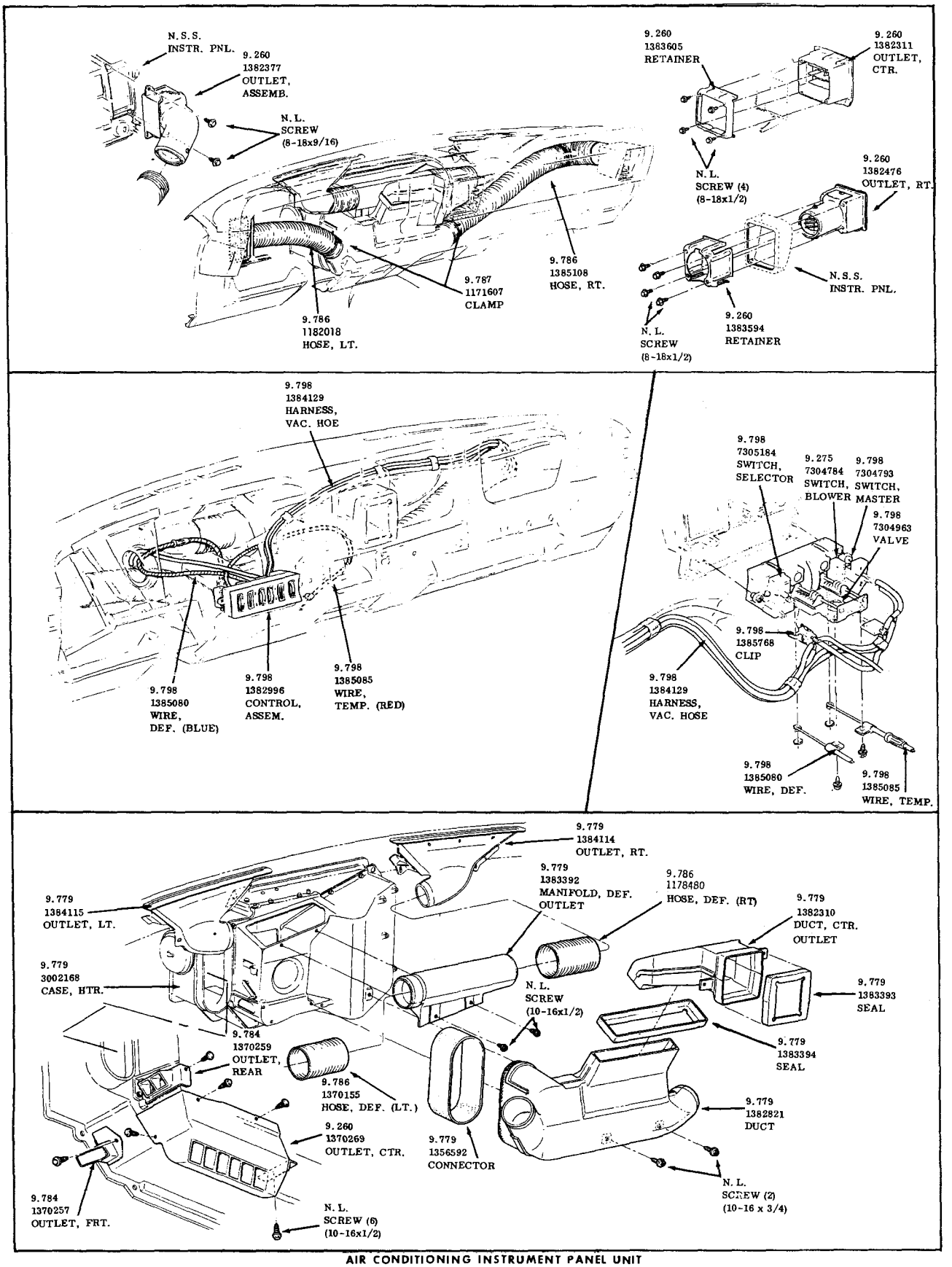

AIR CONDITIONING INSTRUMENT PANEL UNIT
1968-50-60-8000

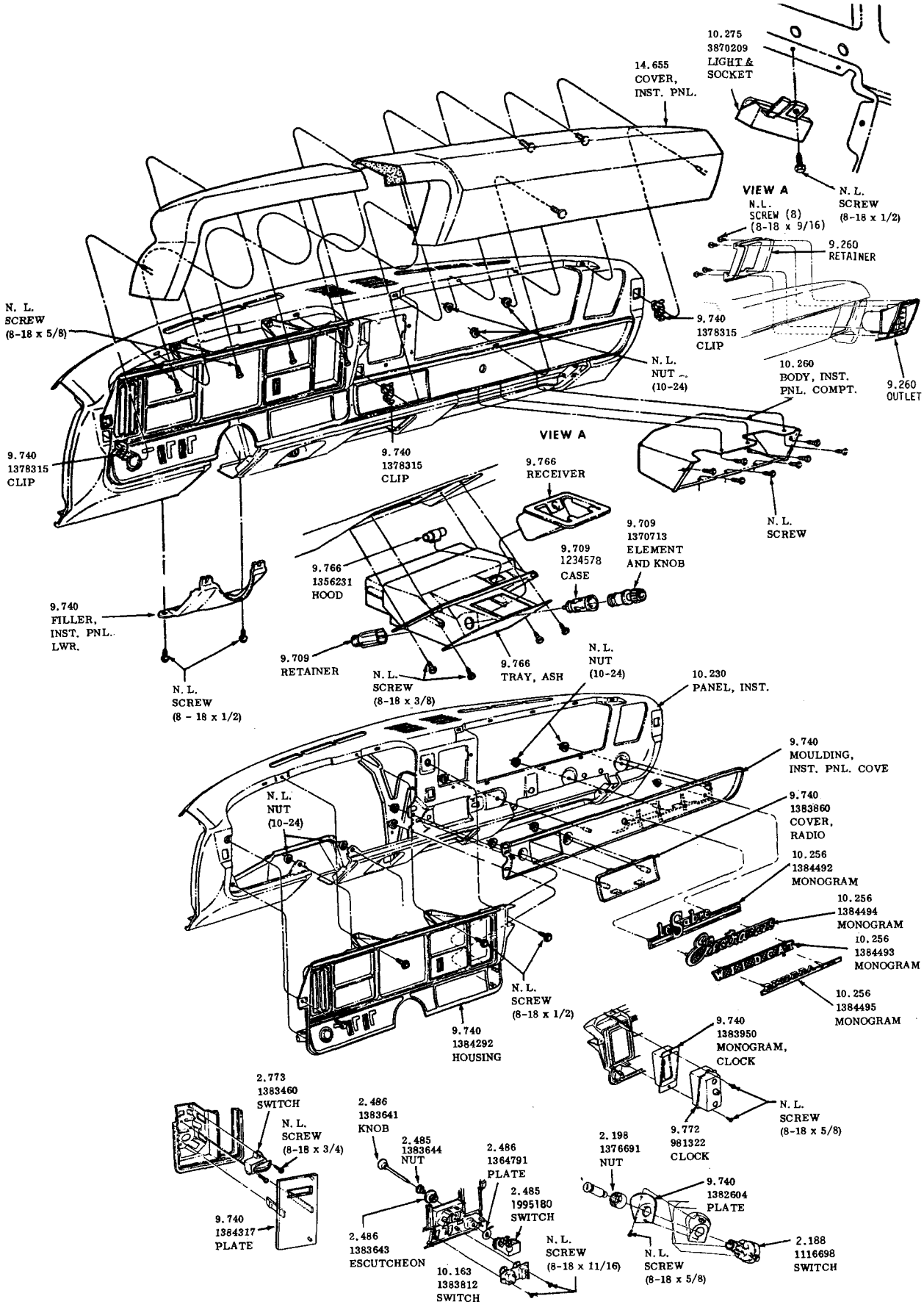

INSTRUMENT PANEL
1968-50-60-80-9000

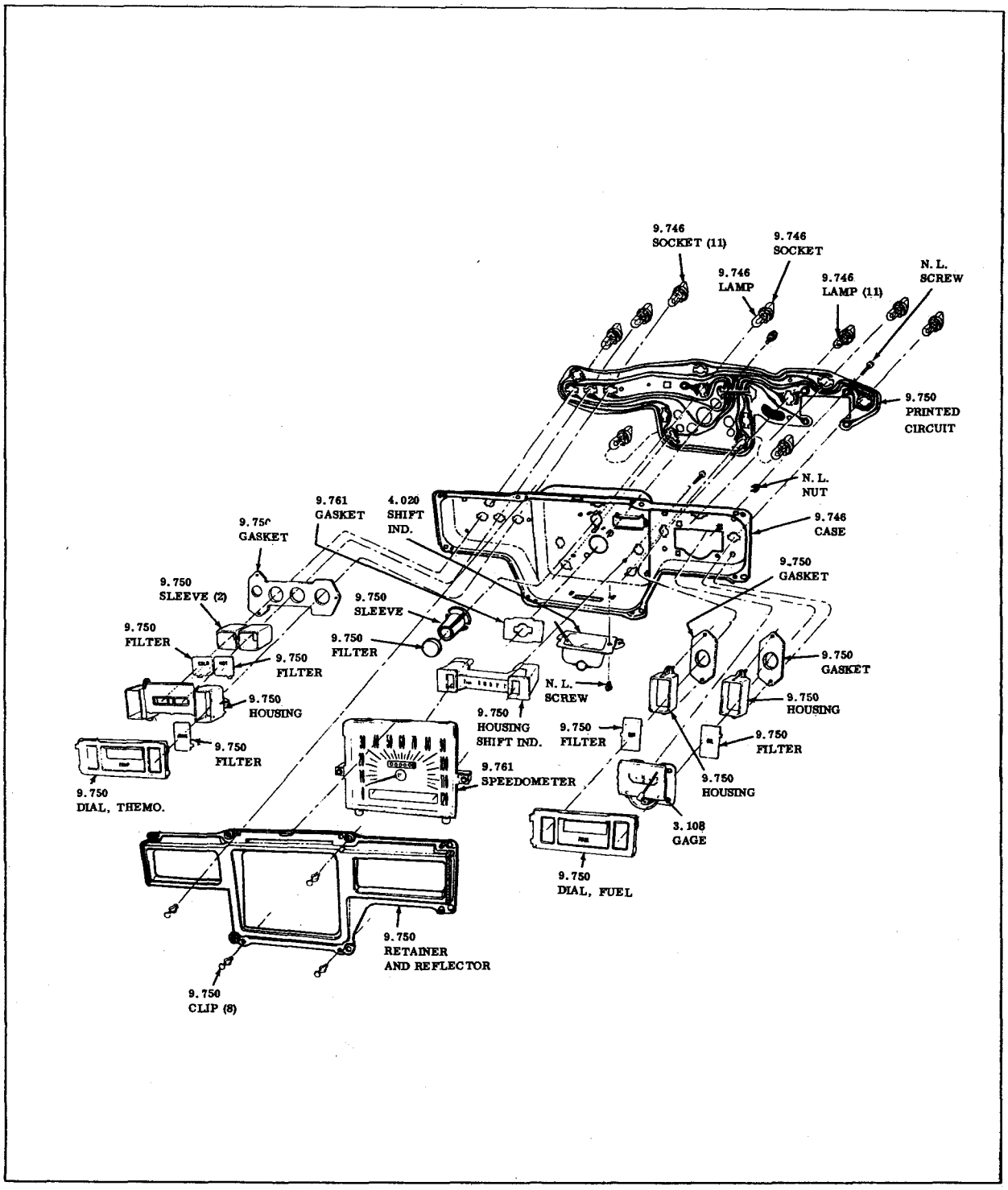

TYPICAL
INSTRUMENT CLUSTER
1968-1969 -50-60-8000

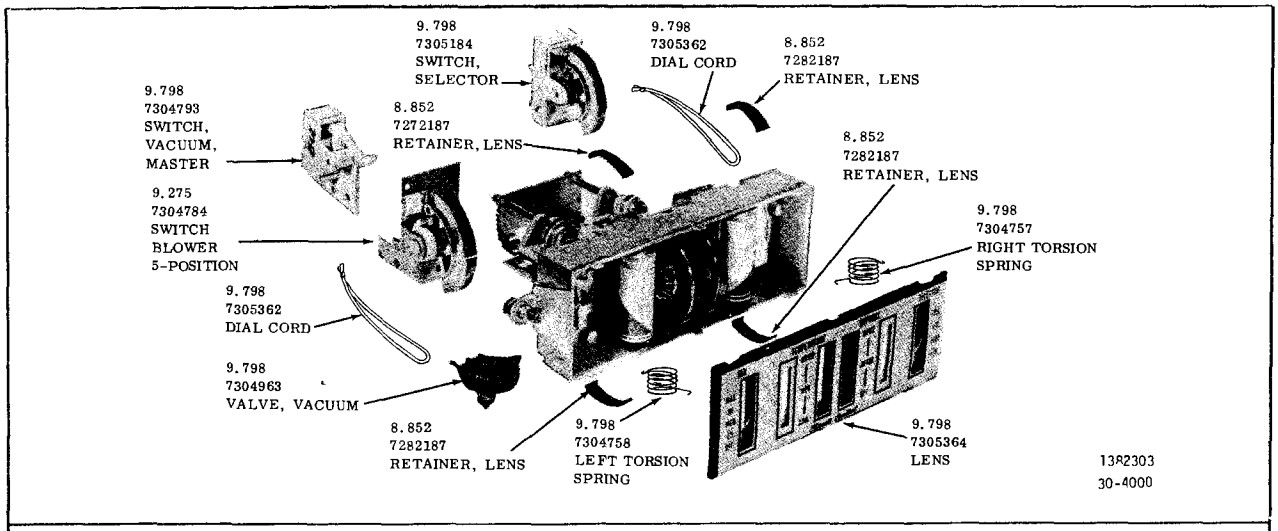

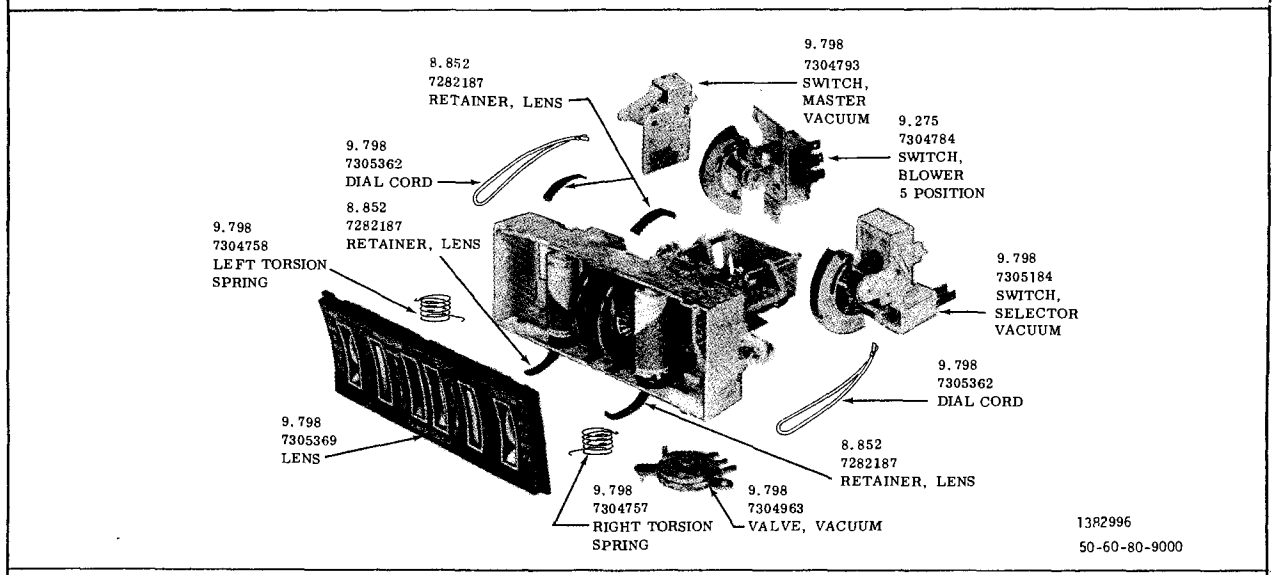

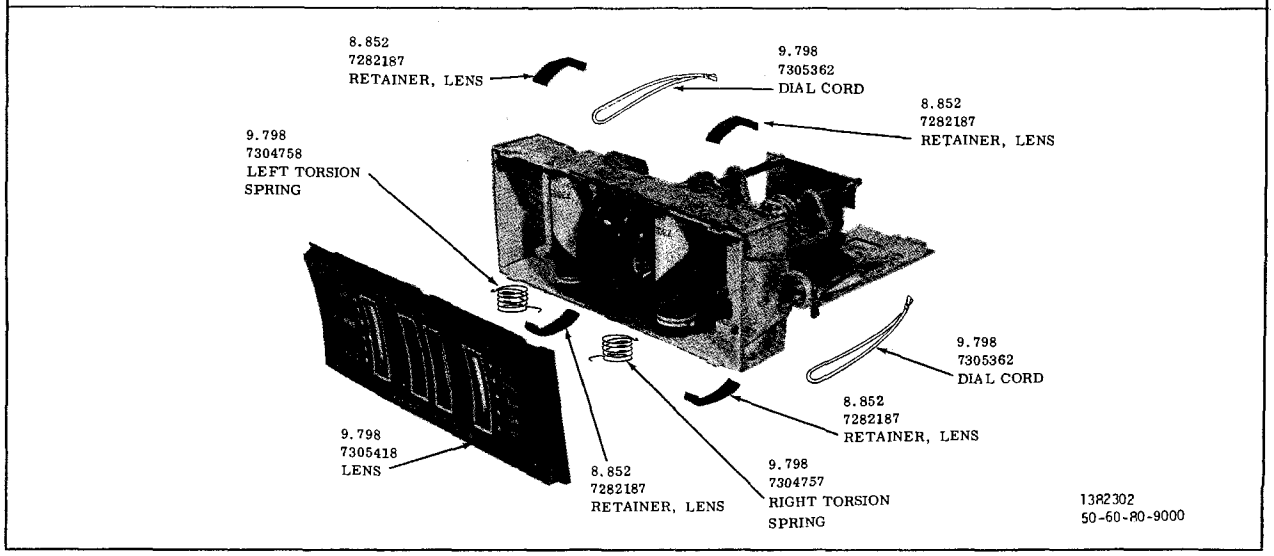

HEATER & AIR CONDITIONING CONTROL
1968-ALL

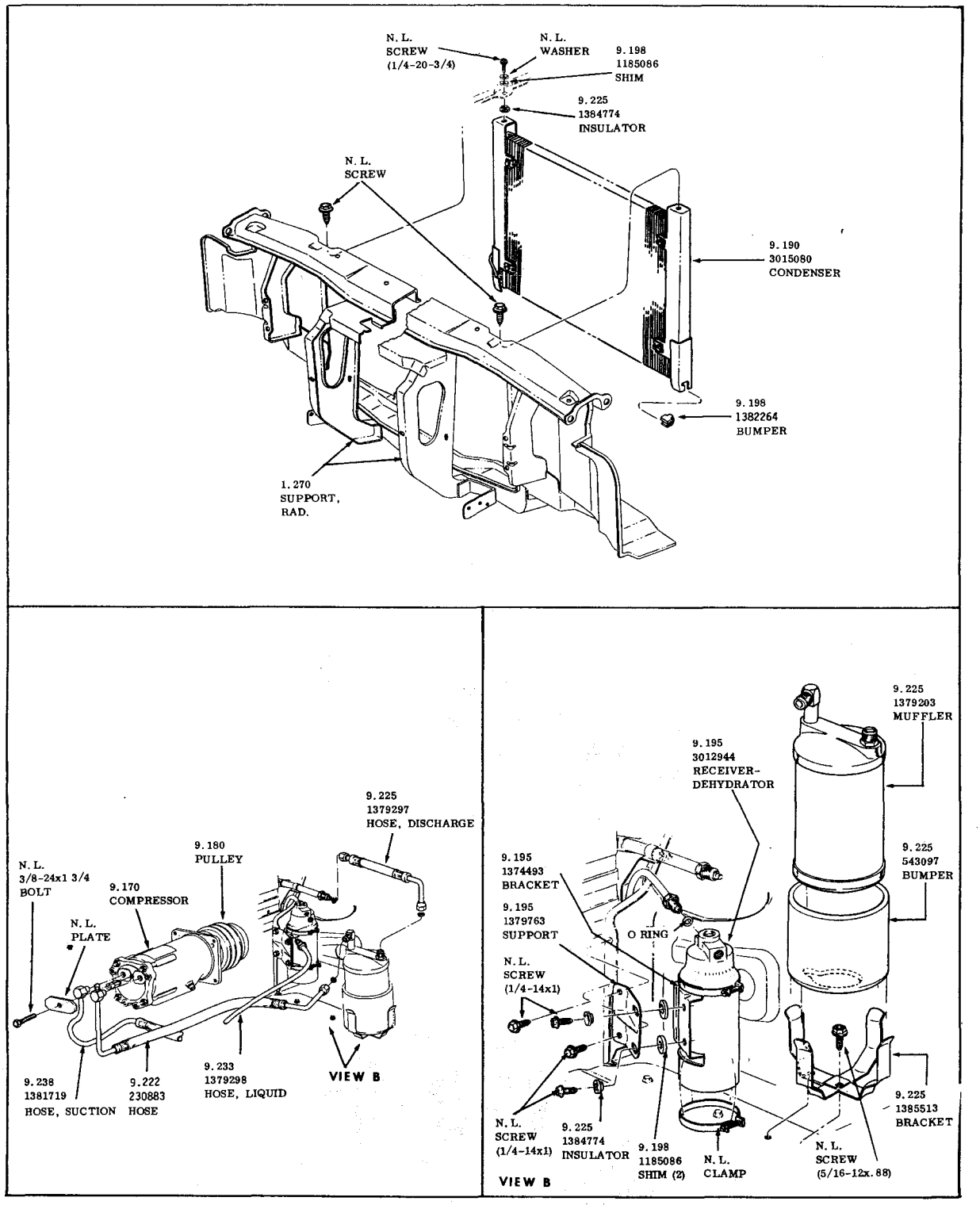

A/C HOSES, RECEIEVER DEHYDRATOR CONDENSER & MUFFLER
1968 - 9000

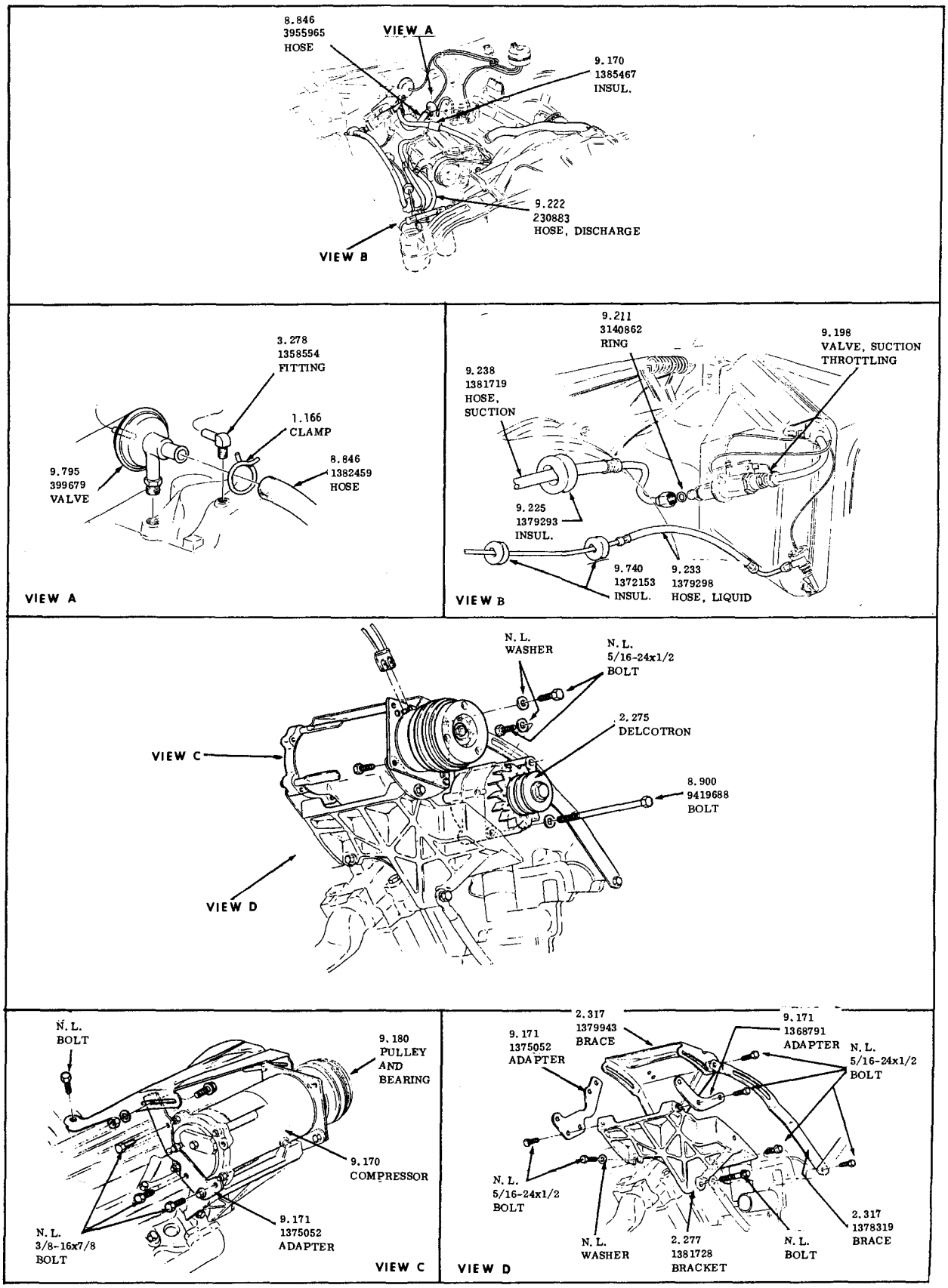

A/ C HOSES, DELCOTRON & COMPRESSOR MOUNTING
1968 - 9000

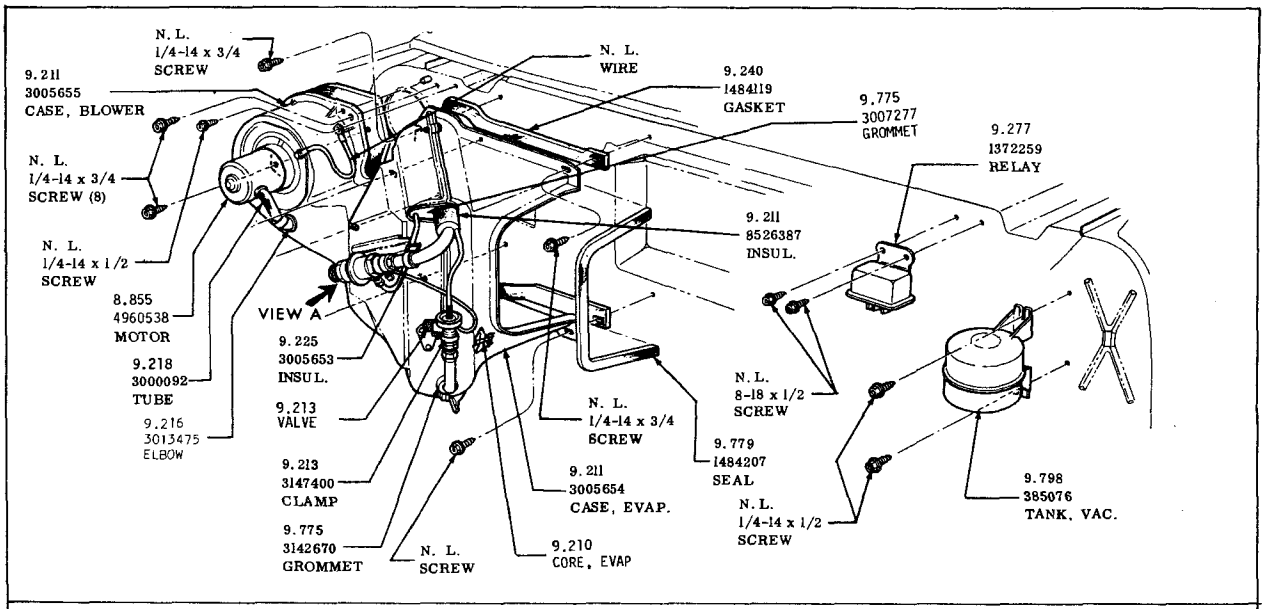

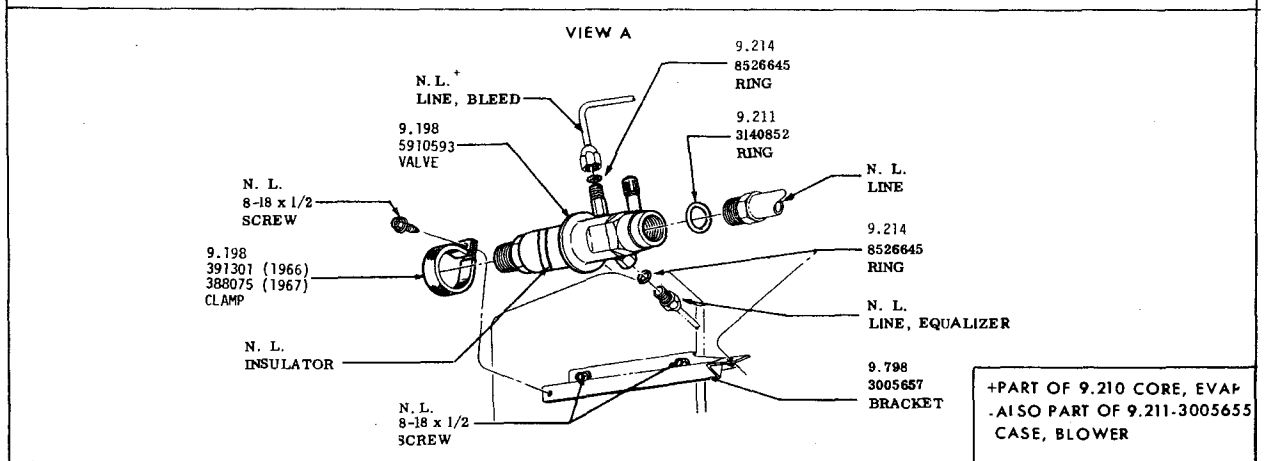

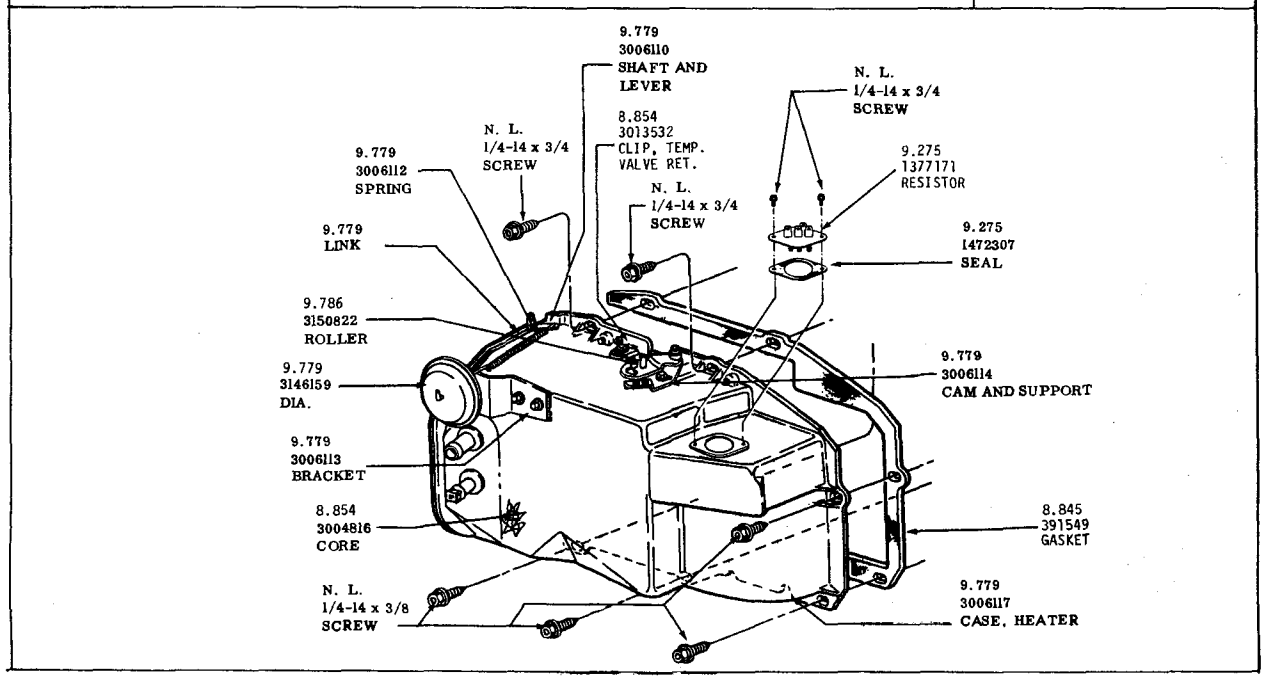

AIR CONDITIONING
DASH UNITS
1966-1968 -RIVIERA

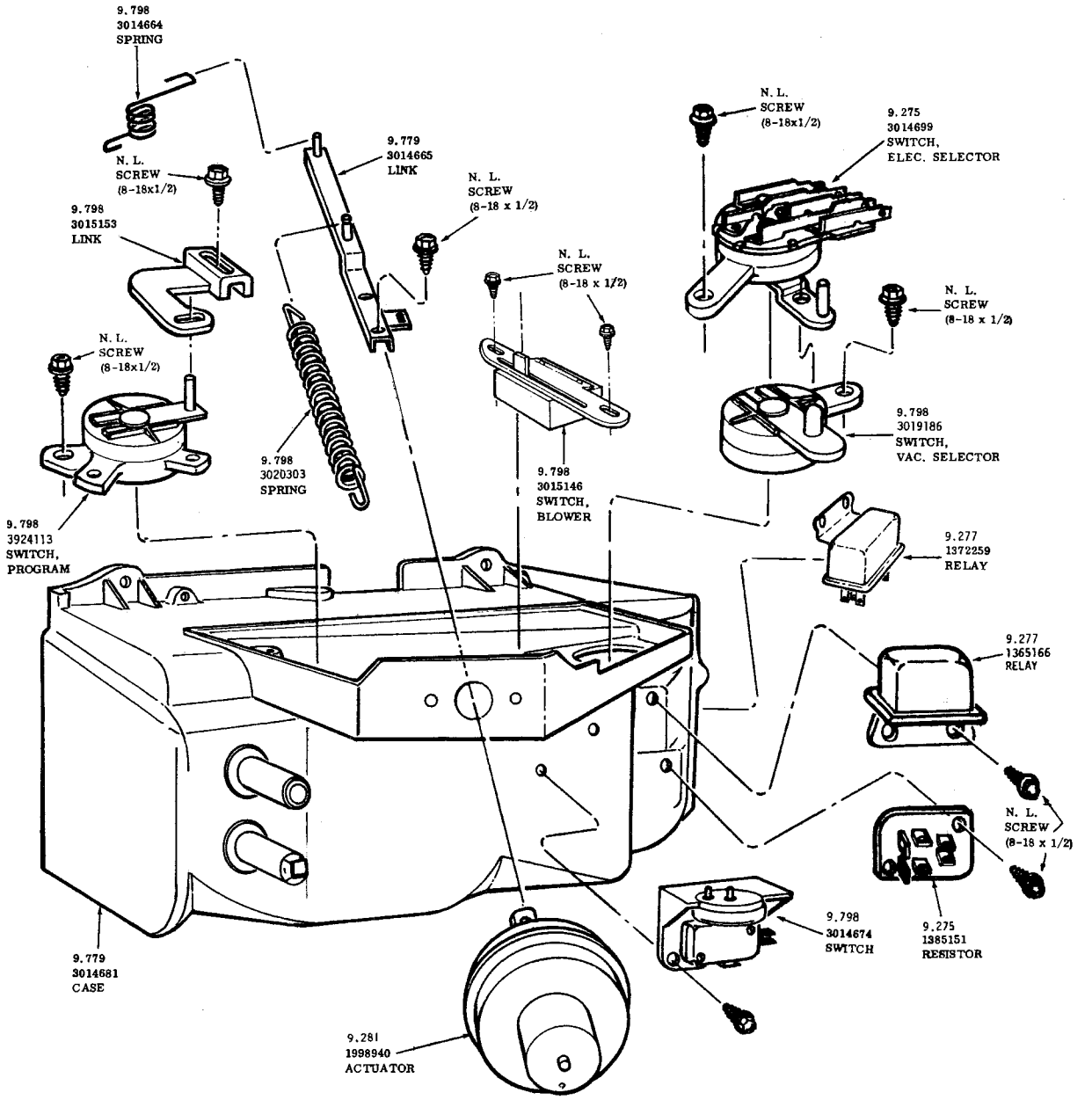

AUTOMATIC CLIMATIC CONTROL
1968 RIVIERA

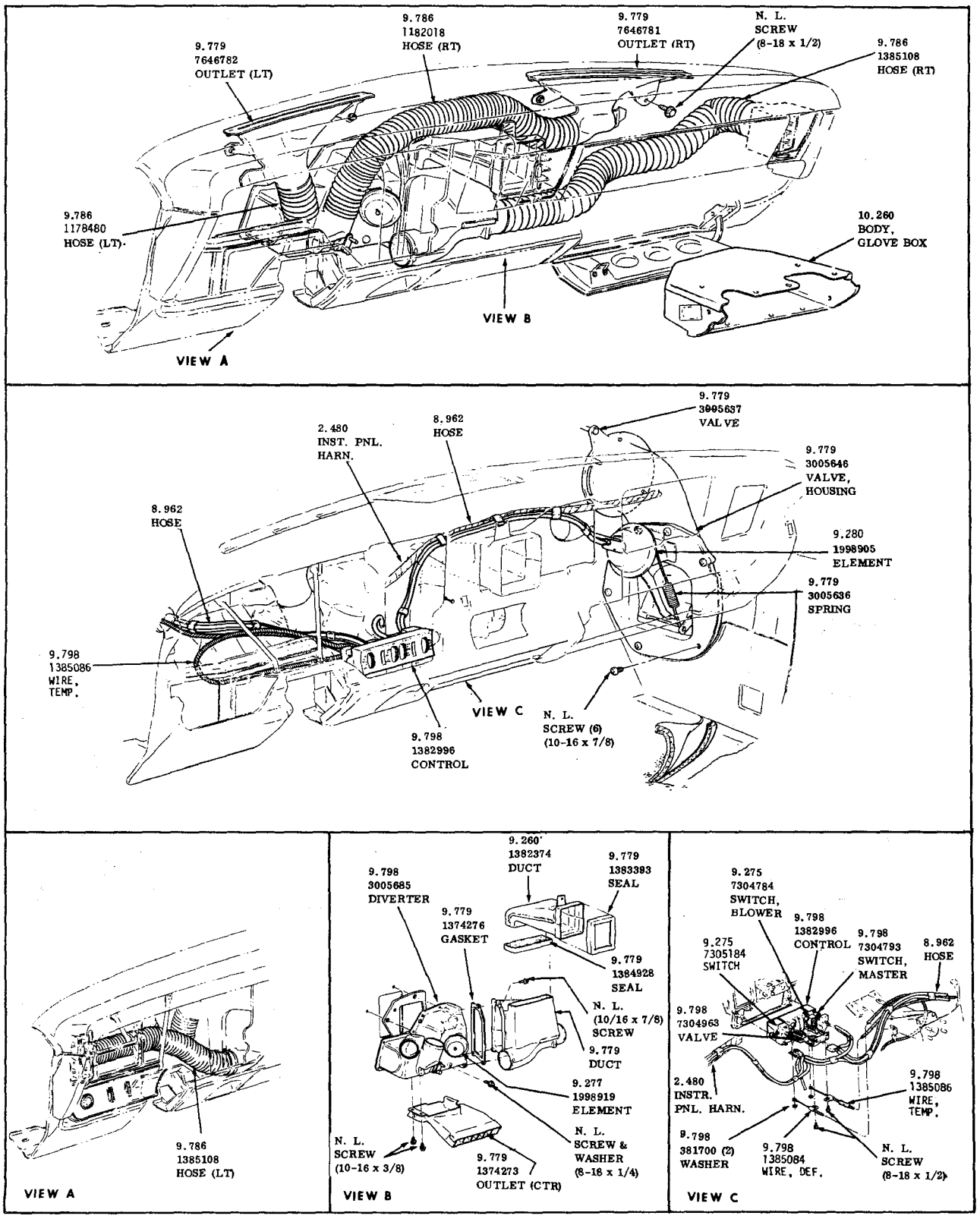

AIR CONDITION INSTRUMENT PANEL UNIT
1968 RIVIERA

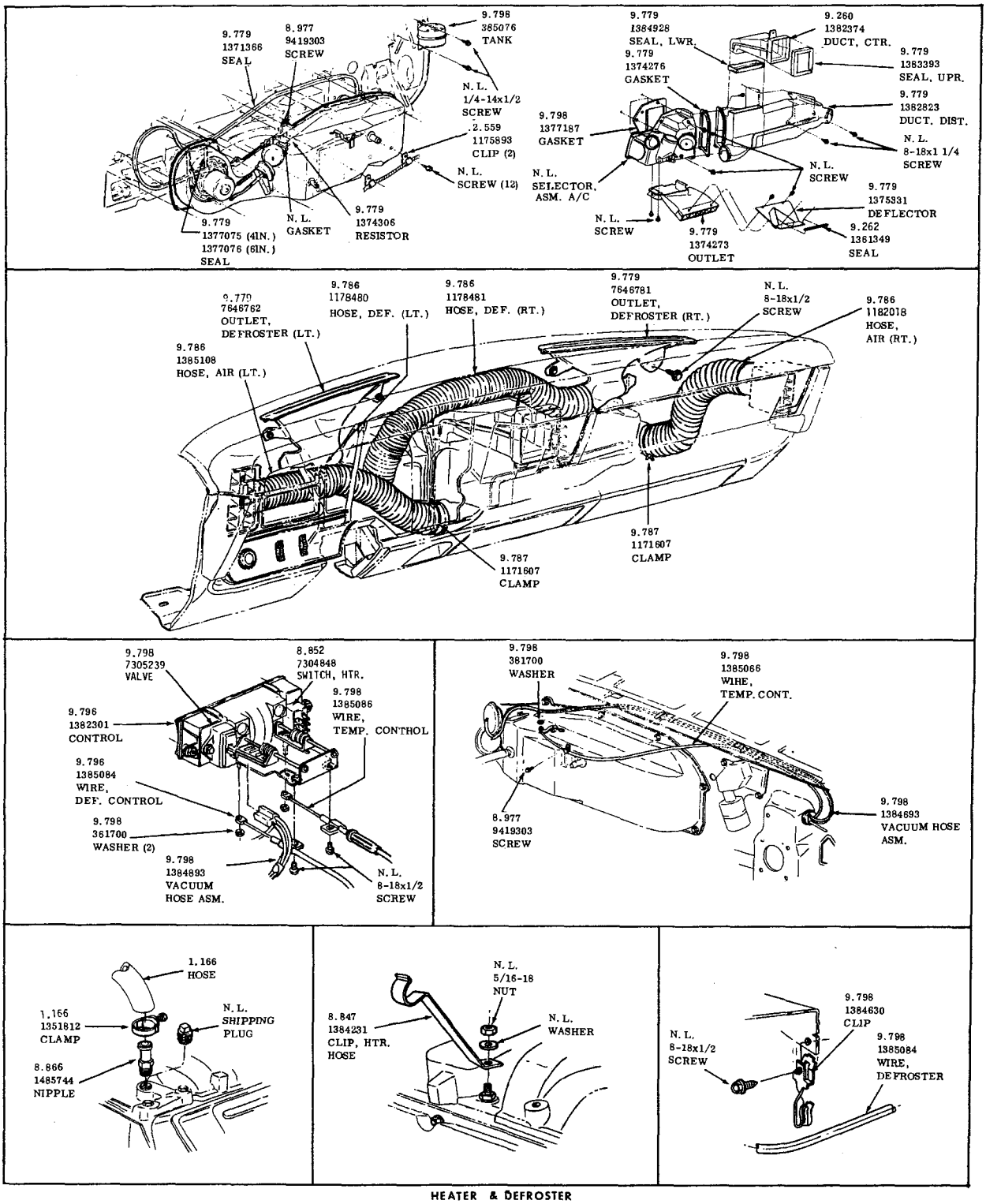

HEATER & DEFROSTER
1968 RIVIERA (LESS A/C.)

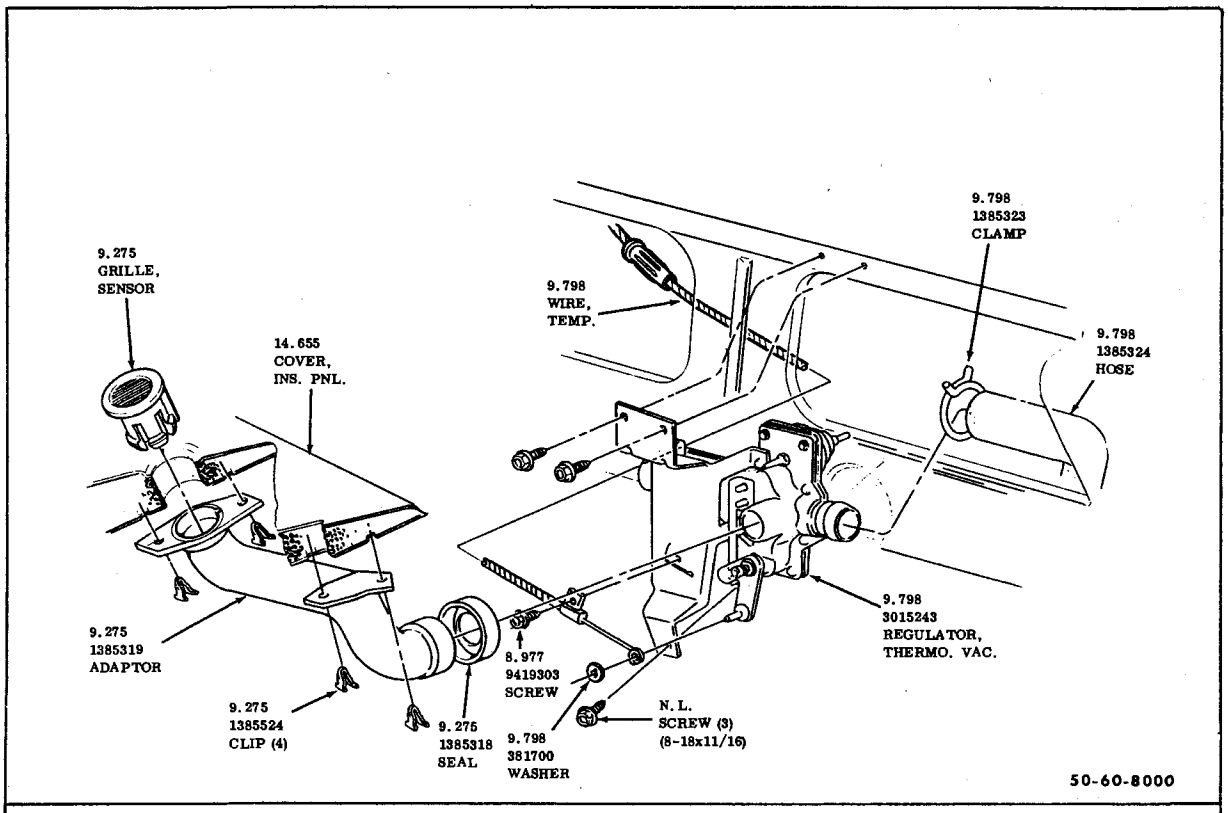

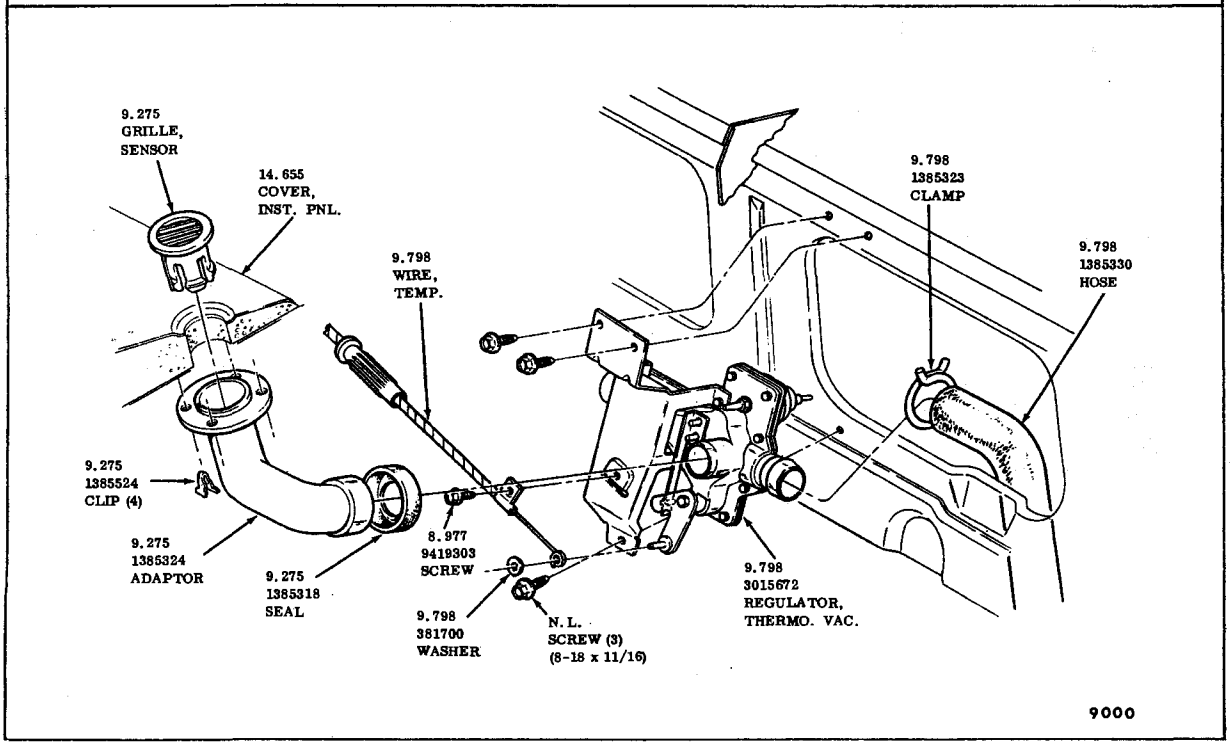

AUTOMATIC CLIMATE CONTROL
REGULATOR, THERMOSTATIC VACCUM
1968 - 50-60-80-9000

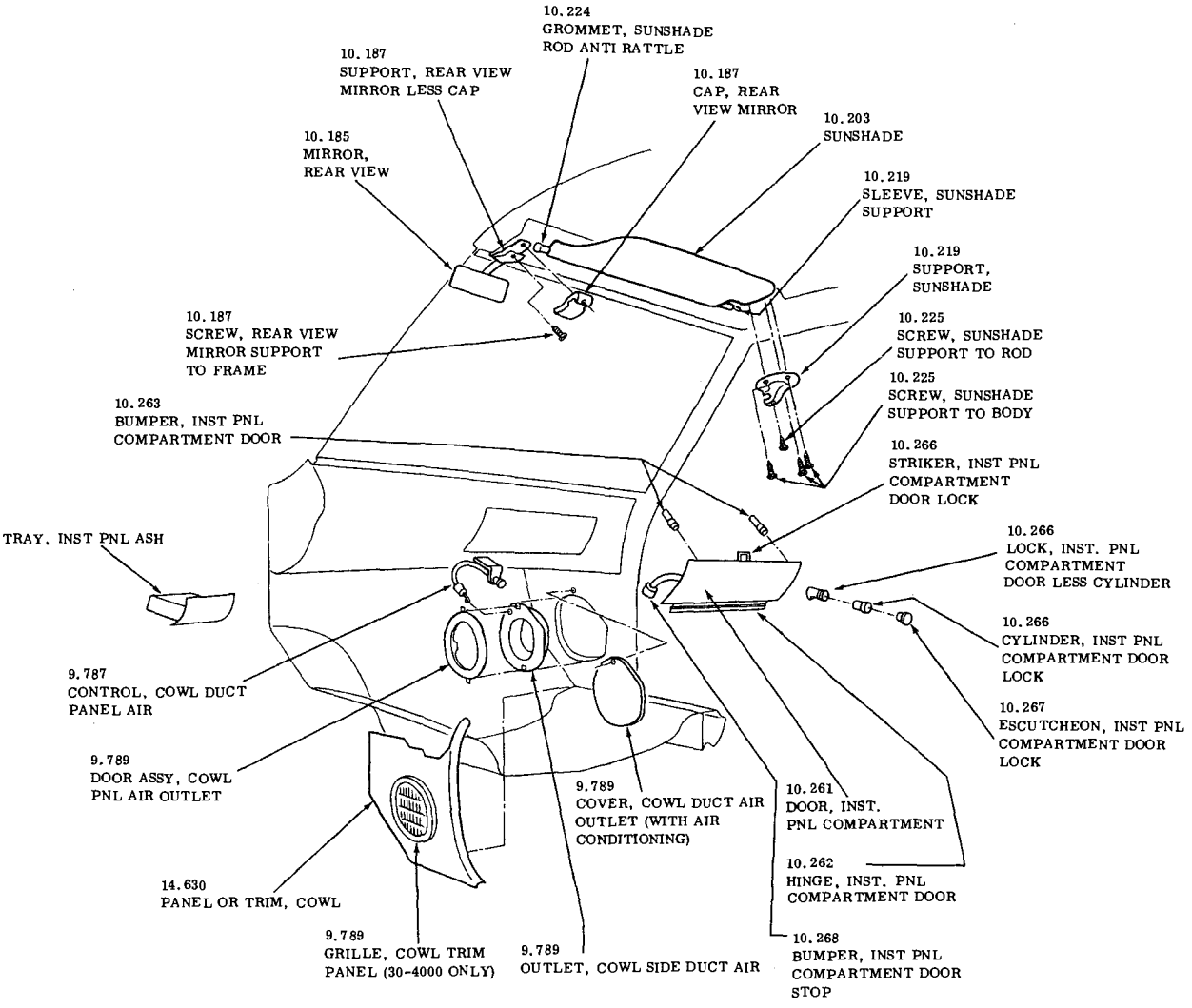

BODY FRONT END HARDWARE
1968 ALL

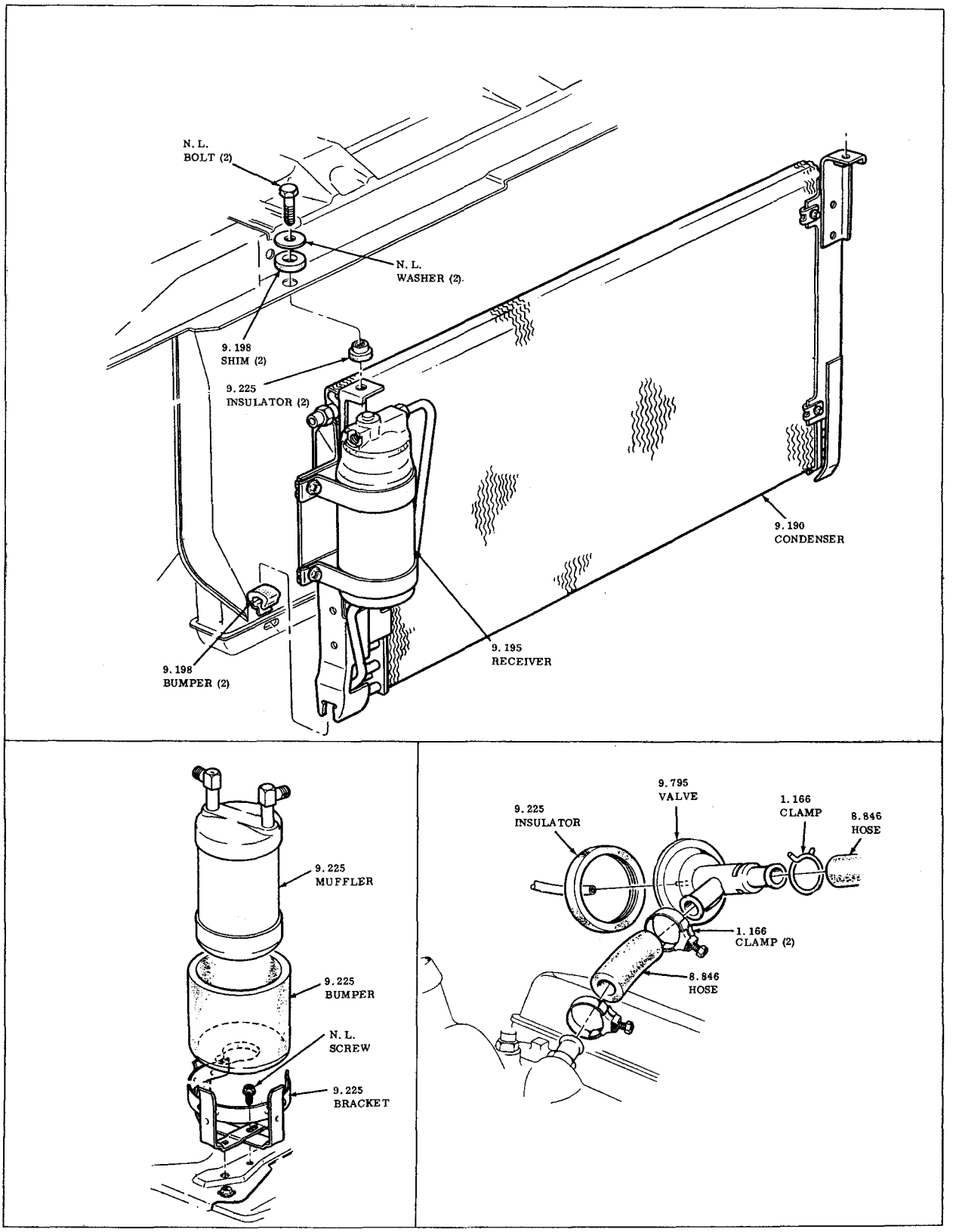

A/C RECEIVER DEHYDRATOR, MUFFLER, & WATER VALVE

1969-30-4000

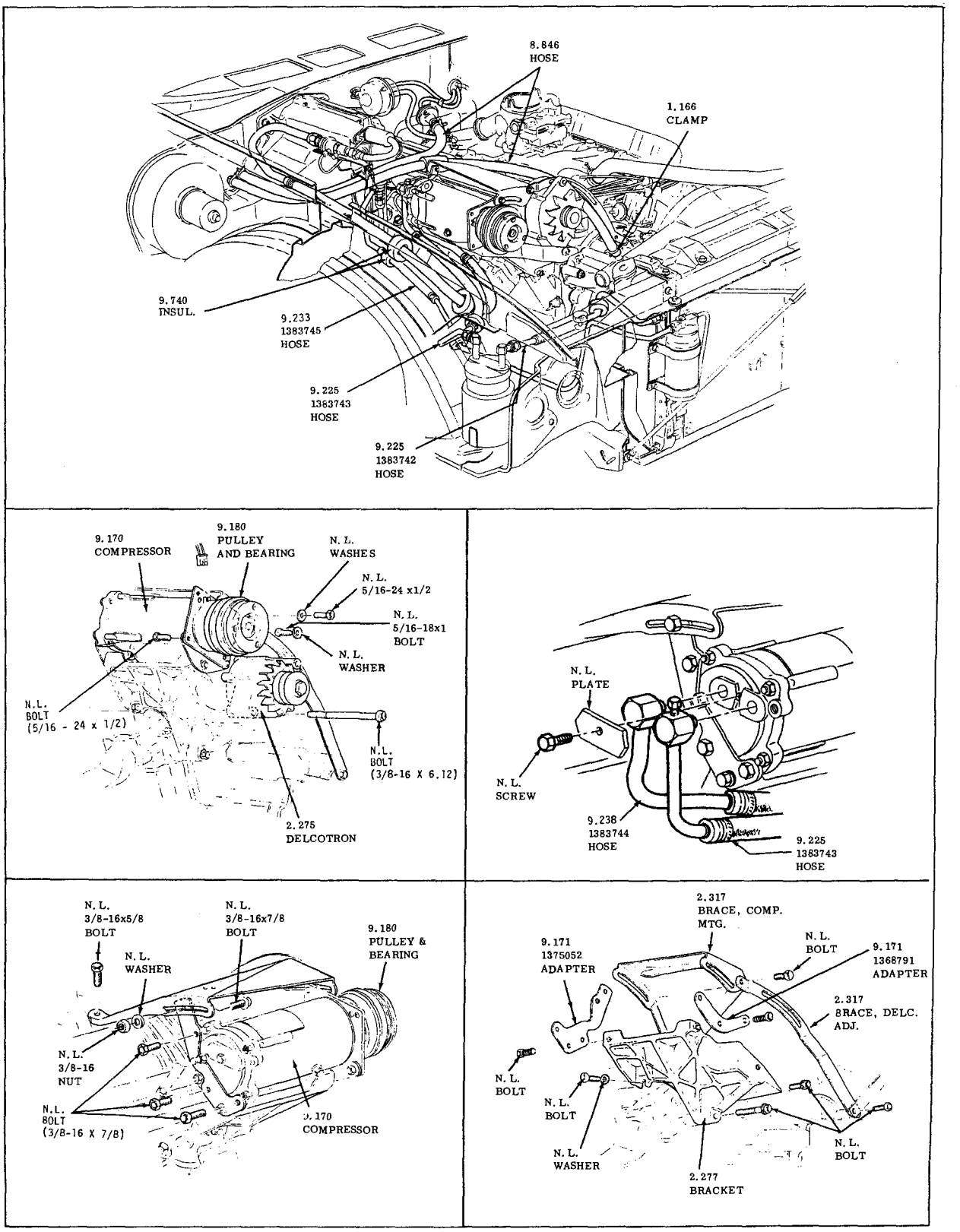

A/C HOSE, COMPRESSOR & DELCOTRON MOUNTINGS
1968-1969 - 30-4000

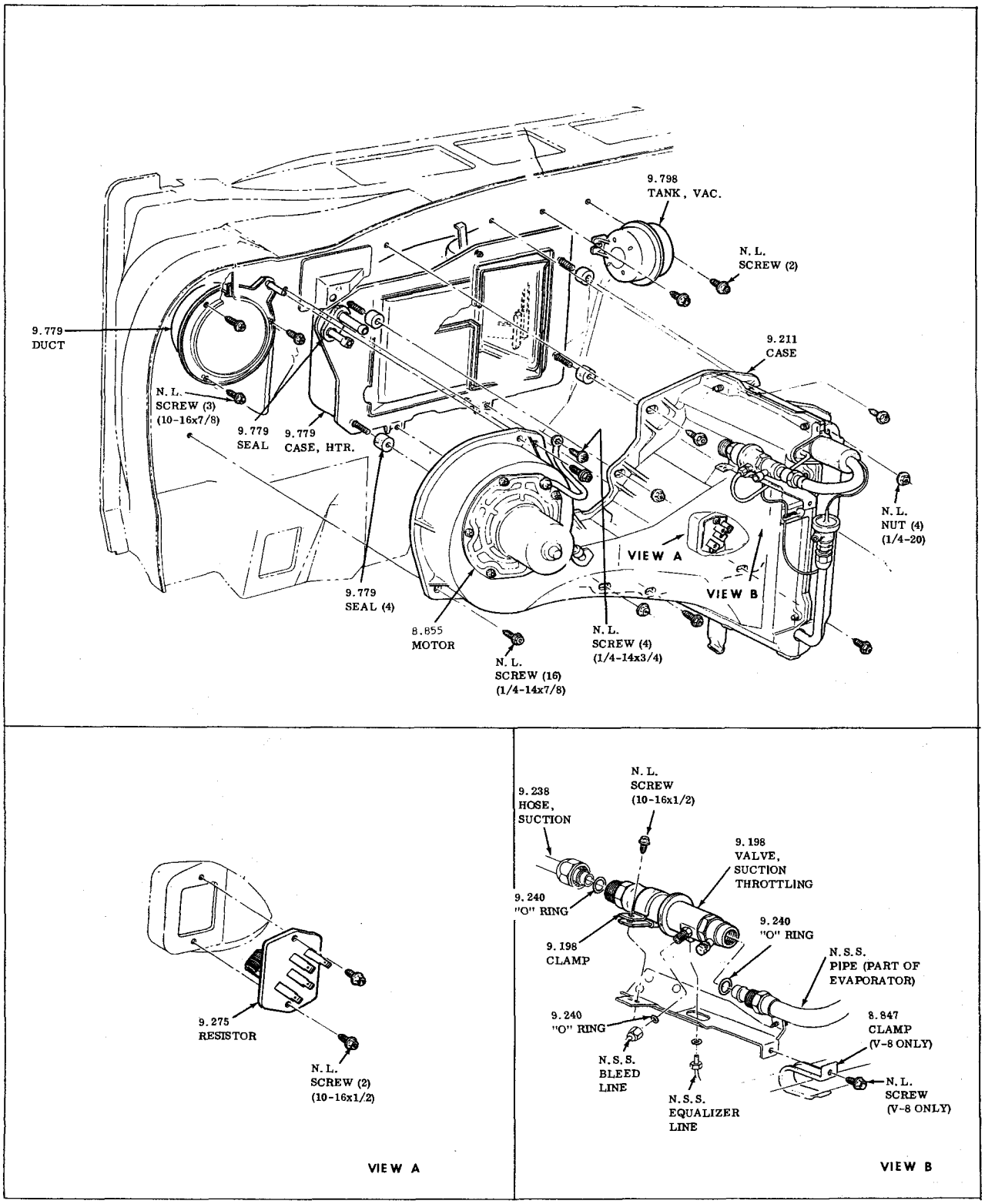

AIR CONDITIONING EVAPORATOR & BLOWER
1969-1970 -30-4000

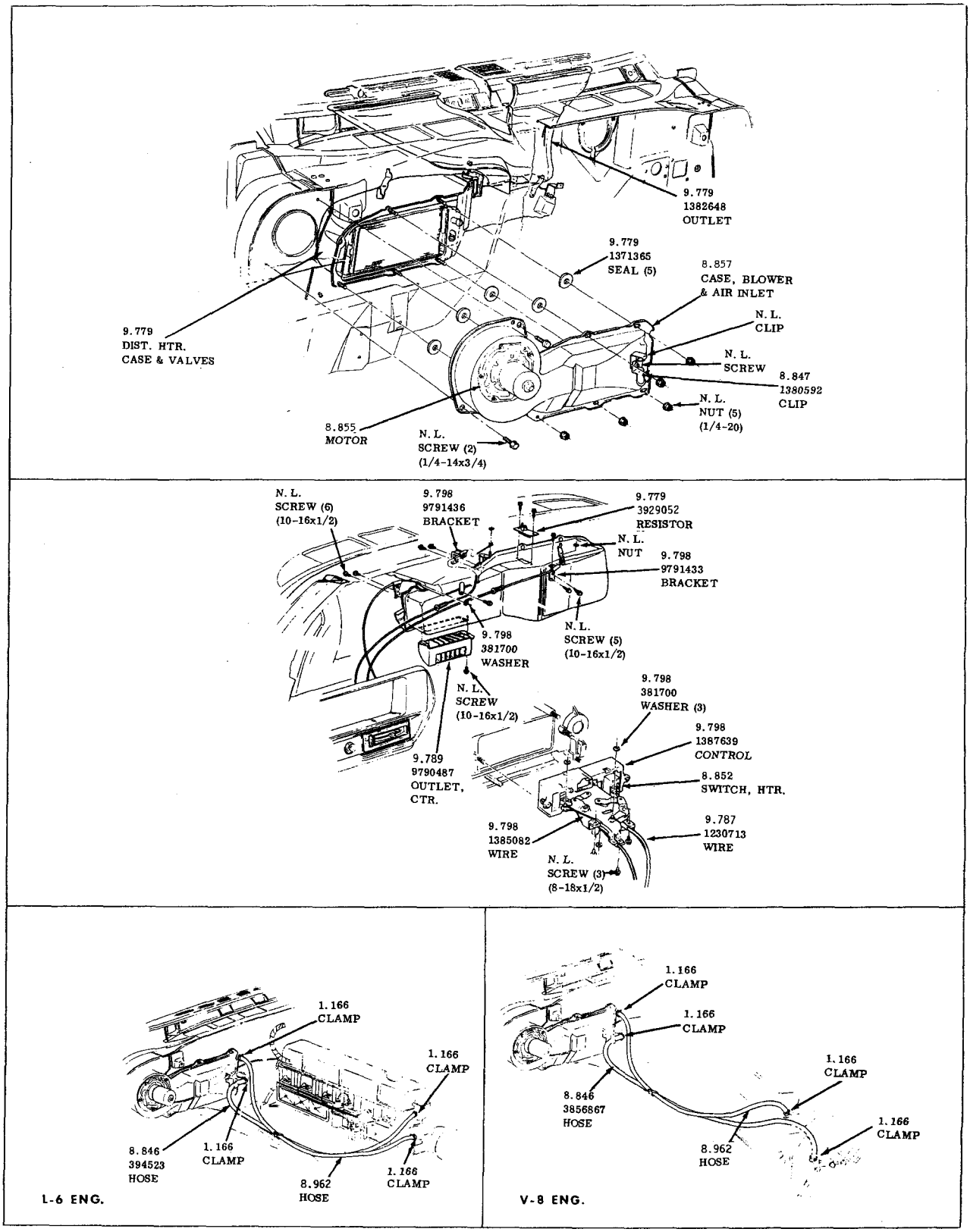

HEATER & DEFROSTER

1969-1972-30-4000

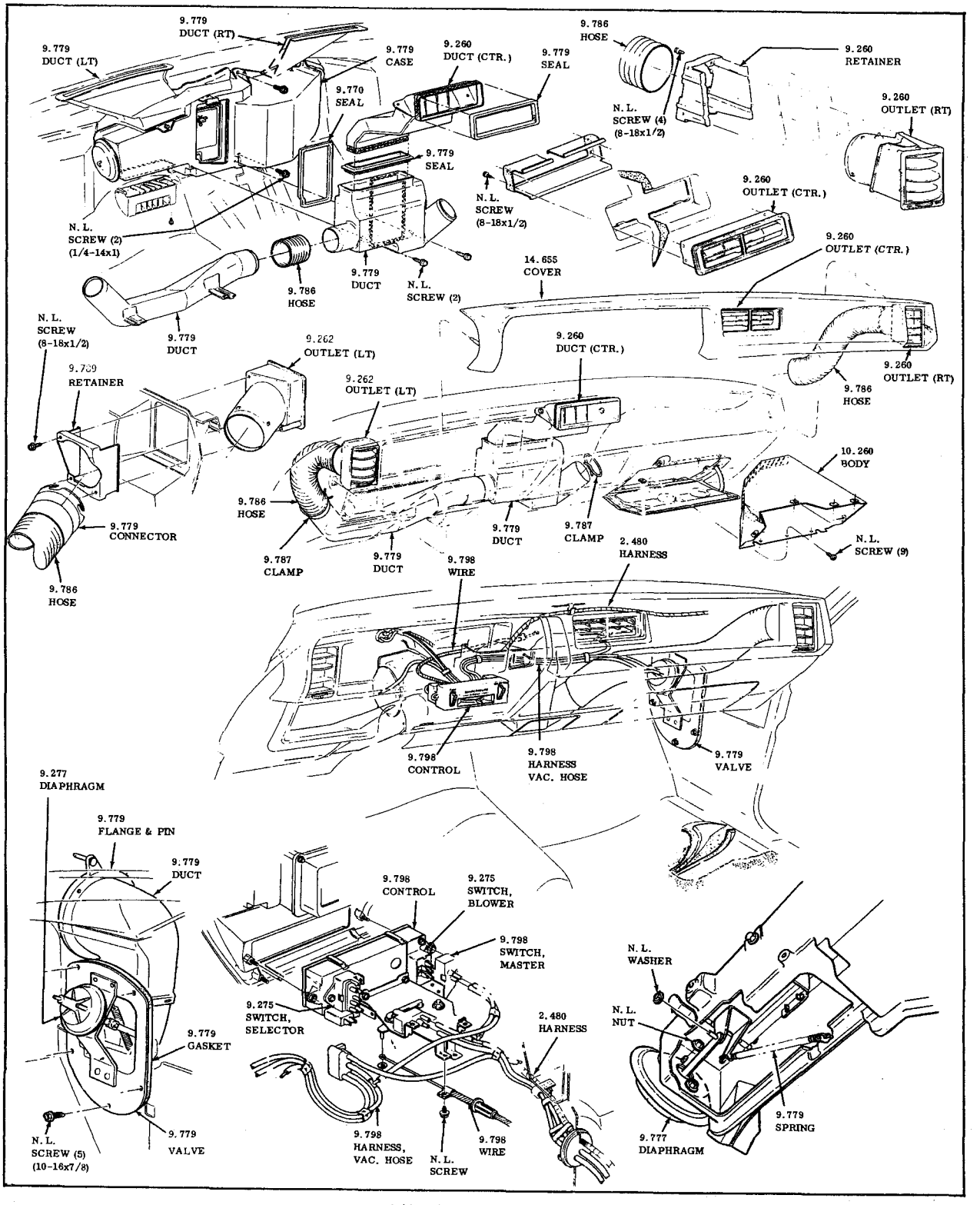

A/C INSTRUMENT PANEL UNITS
1969-30-4000

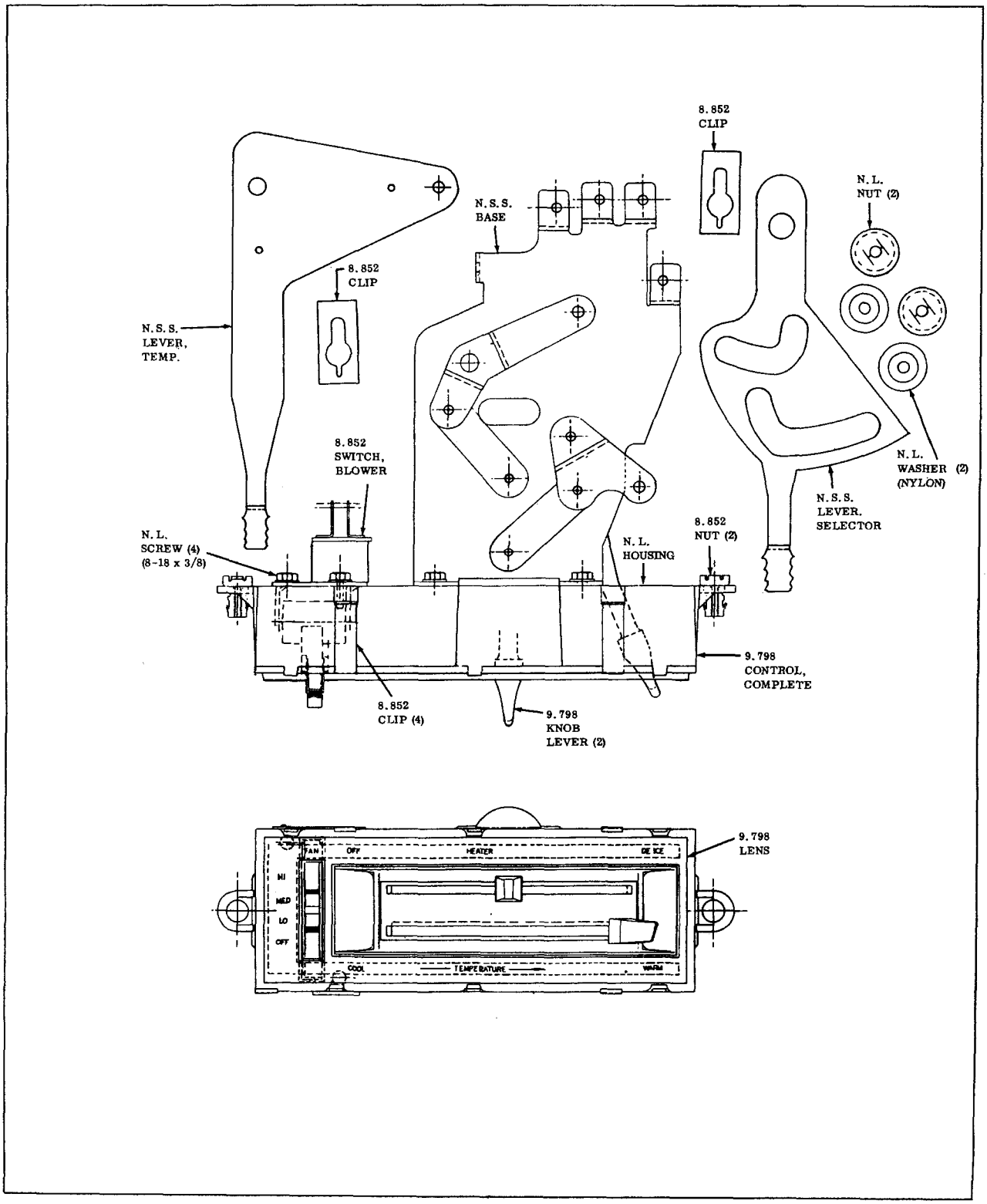

HEATER & DEFROSTER CONTROL
1969-1972-30-4000

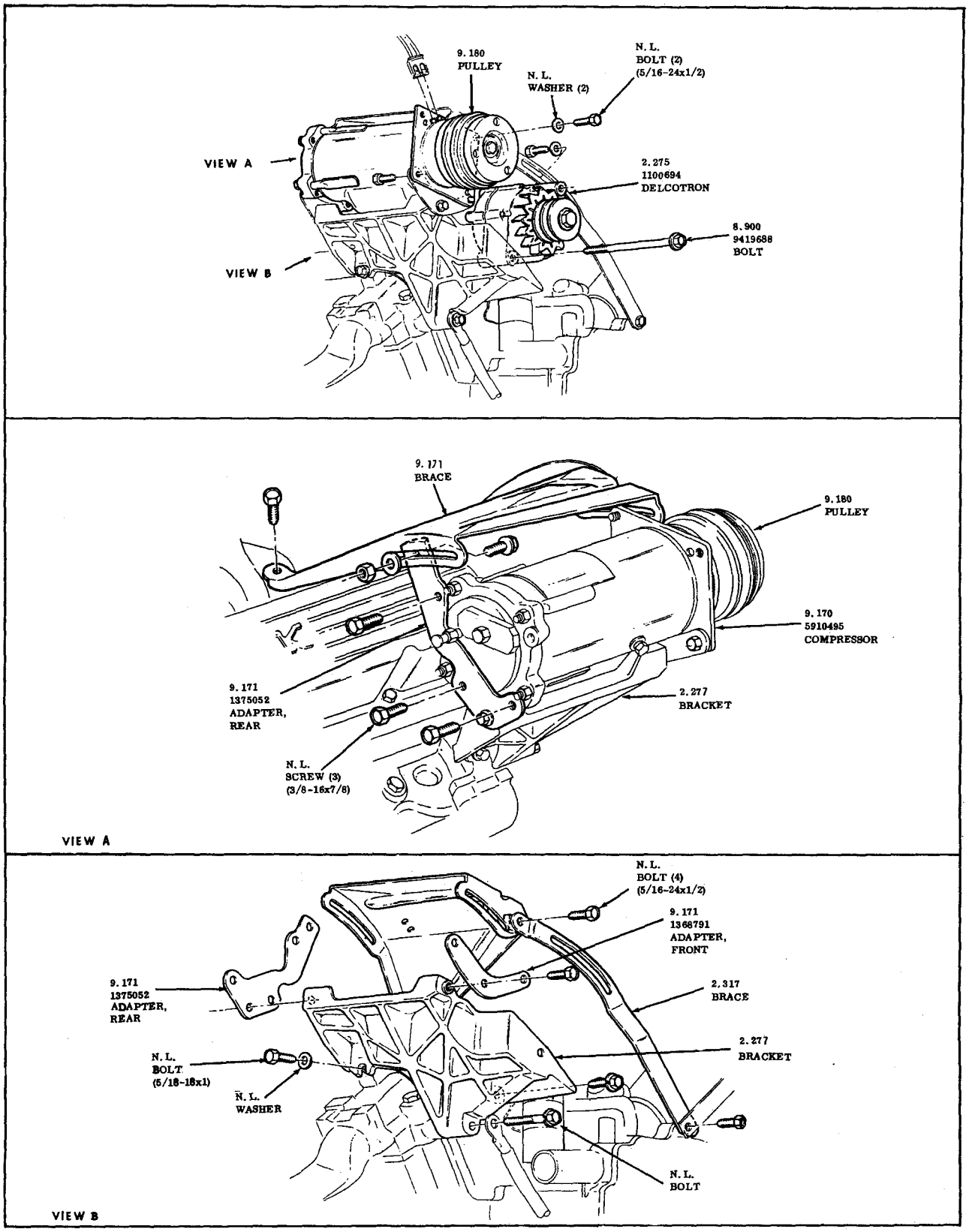

AIR CONDITIONING COMPRESSOR MOUNTING
1968-1970-50-60-8000

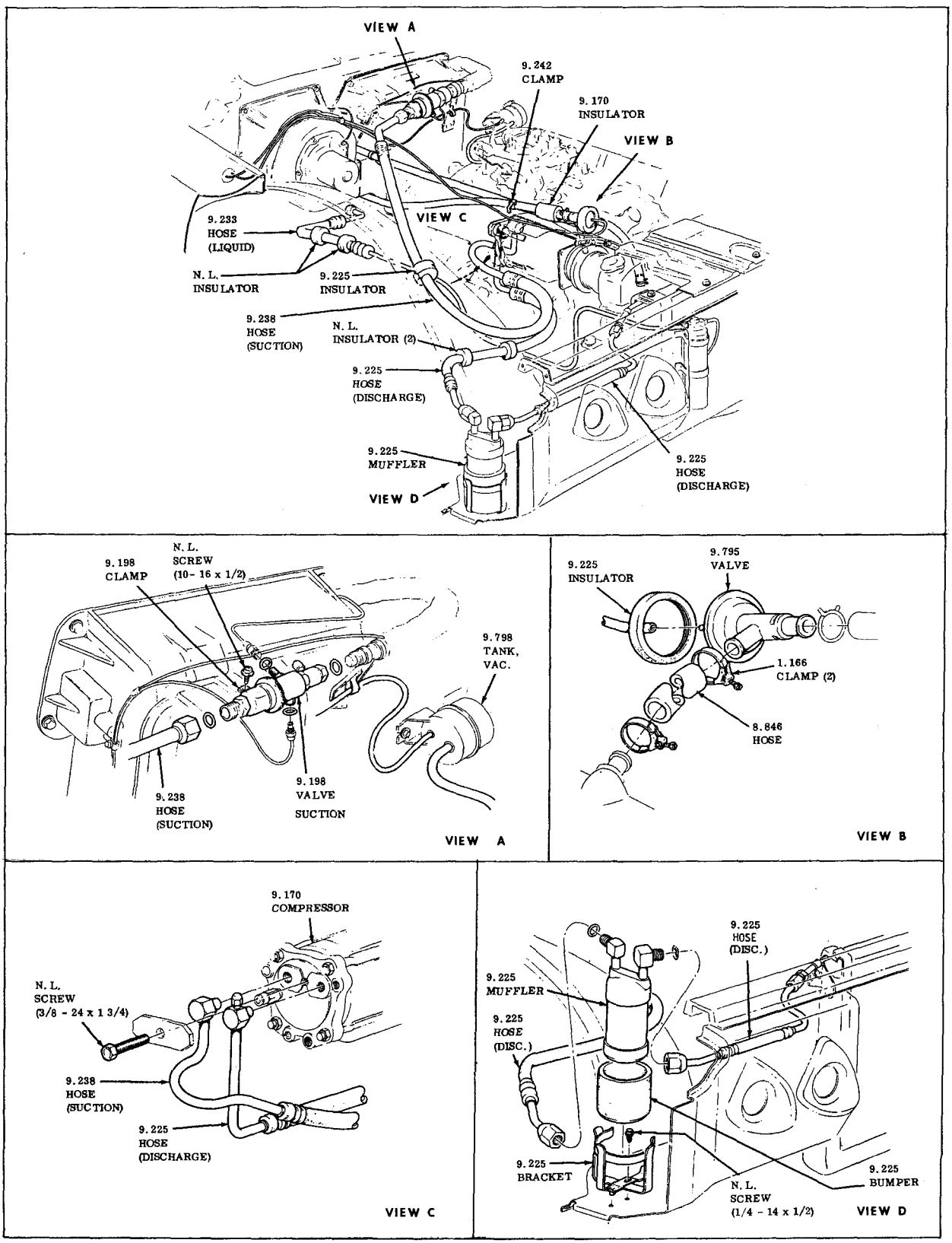

AIR CONDITIONING ENGINE UNITS
1949-50-60-8000

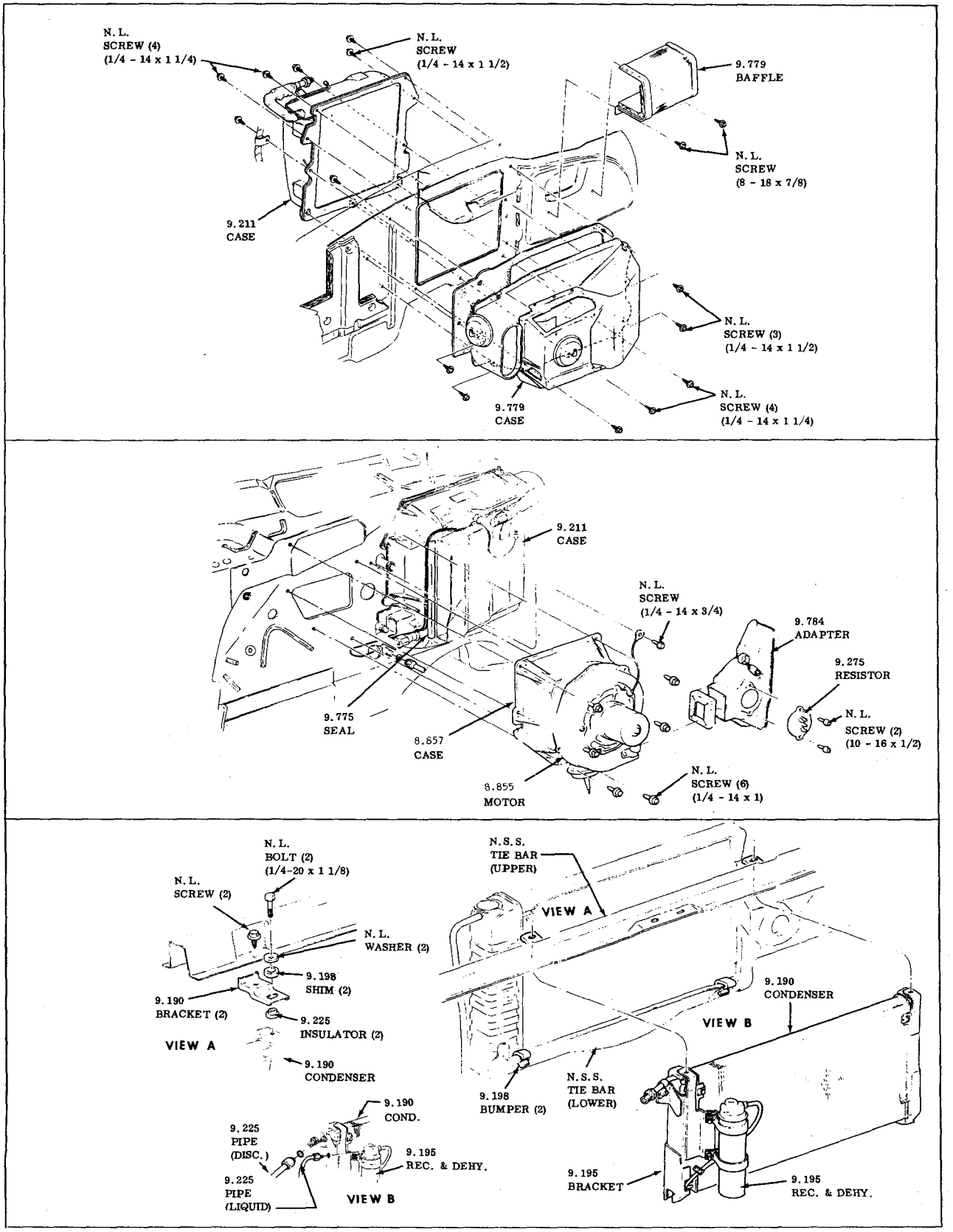

AIR CONDITIONING DASH UNITS
1969-1970 -50-60-8000

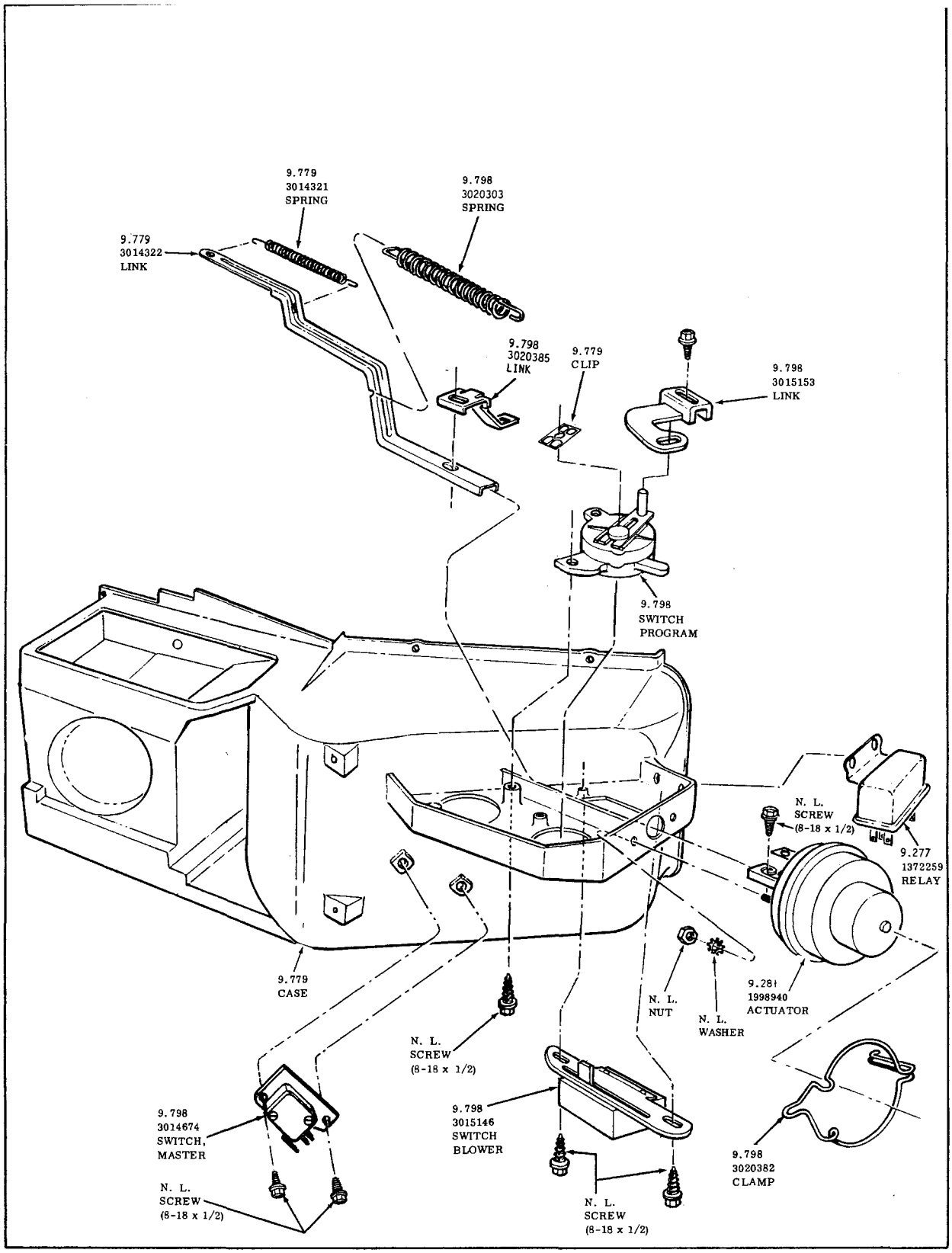

AUTOMATIC CLIMATIC CONTROL

1969-1970 -LESABRE-WILDCAT-ELECTRA 225

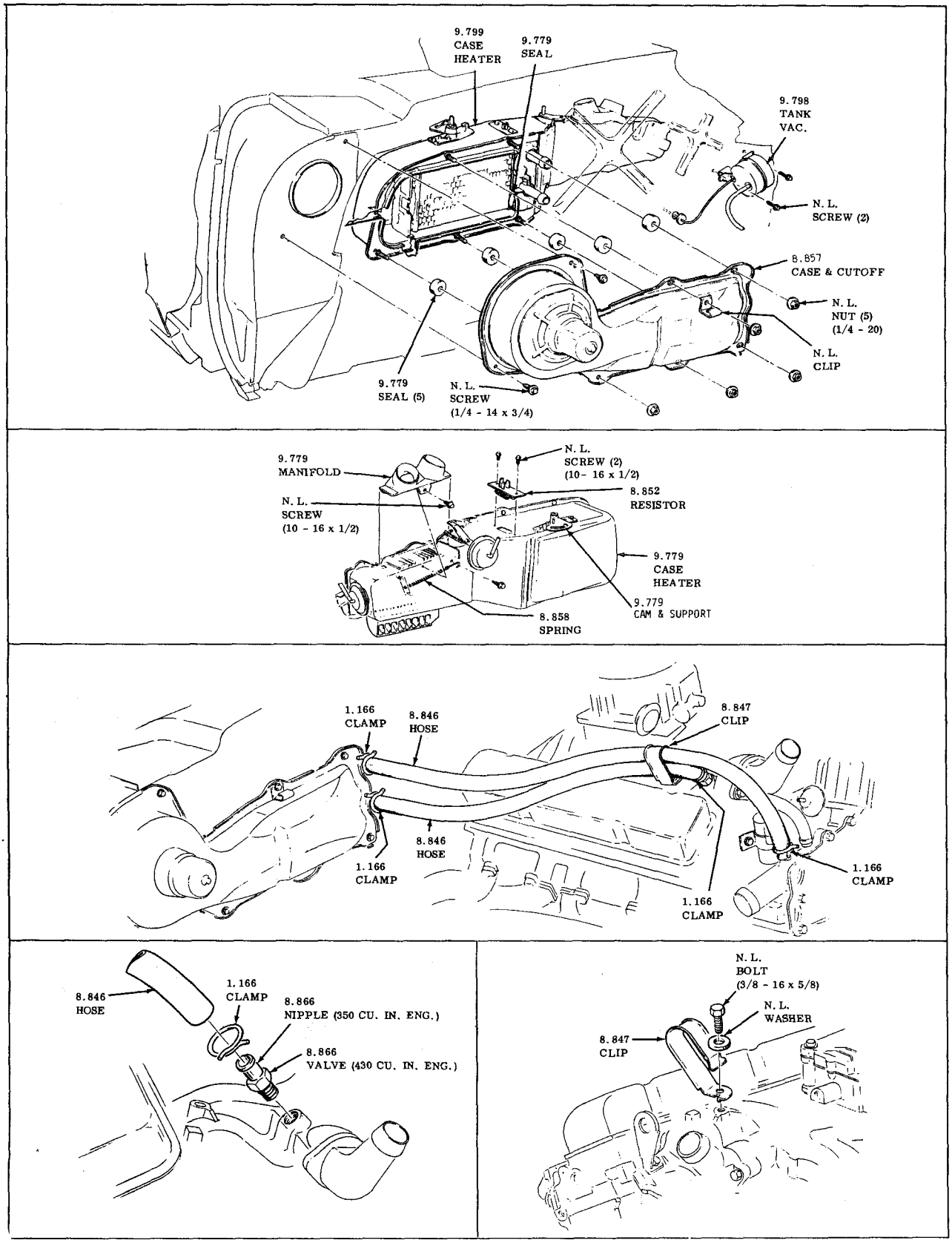

HEATER & DEFROSTER
1969-1970 -50-60-8000

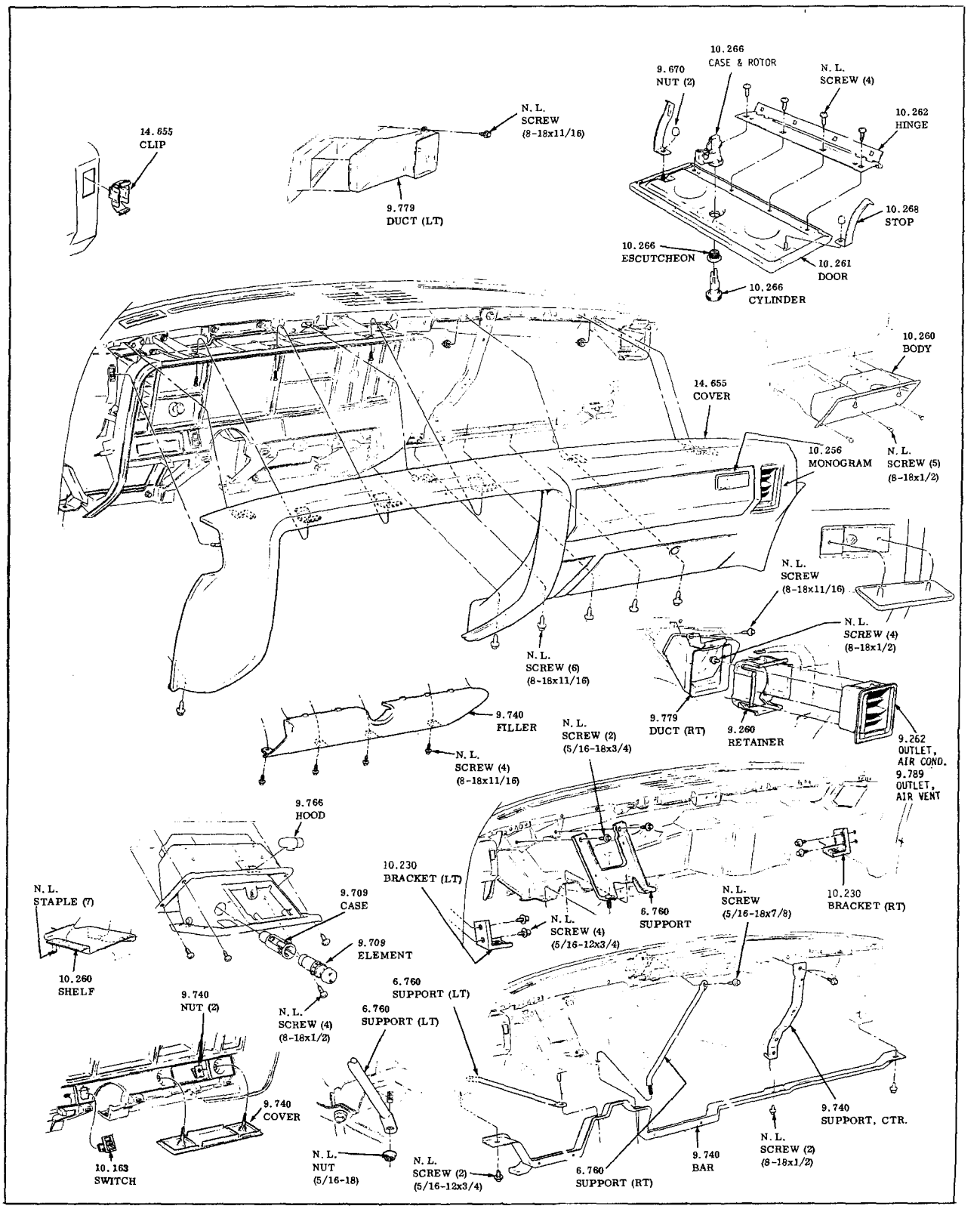

INSTRUMENT PANEL

1969-1970-50-60-8000

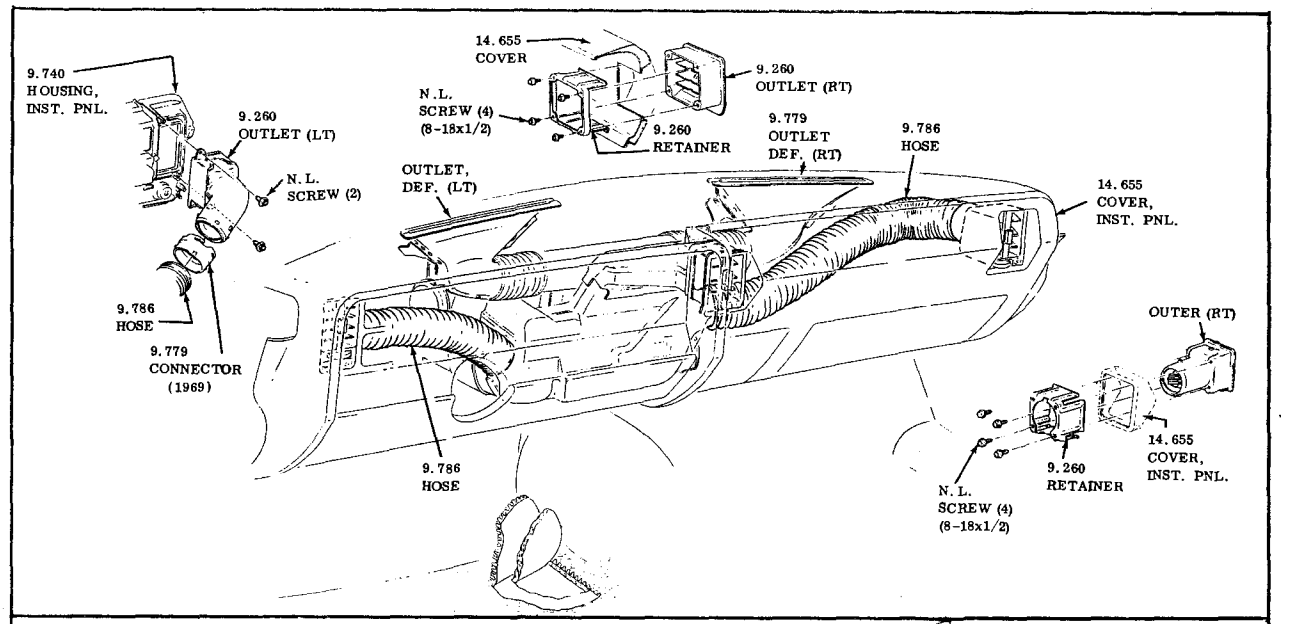

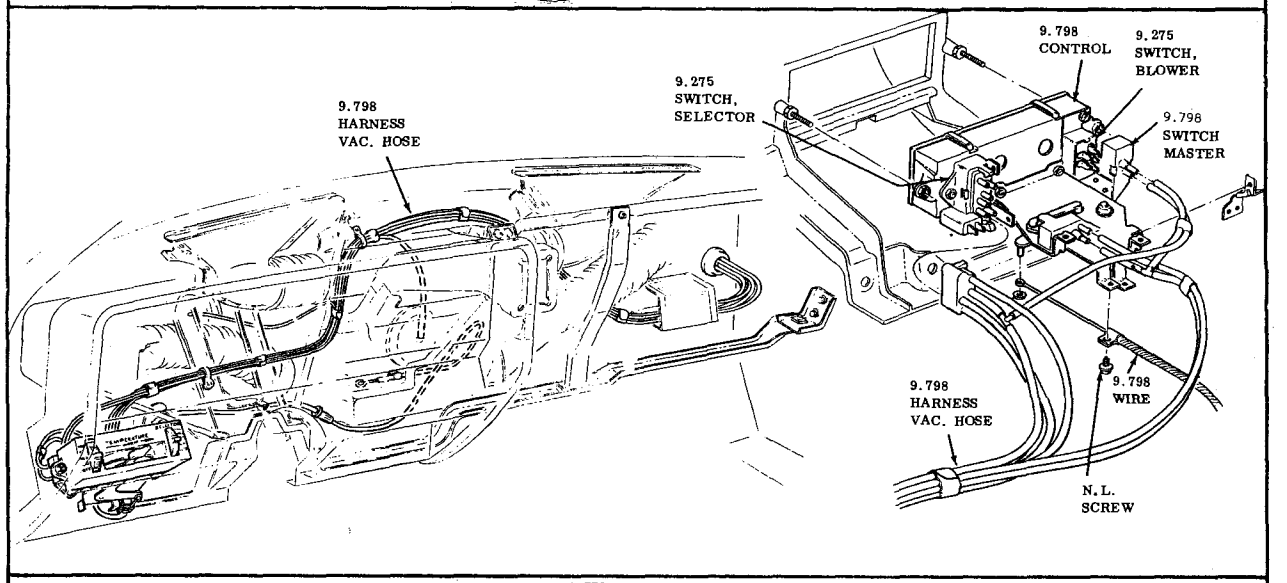

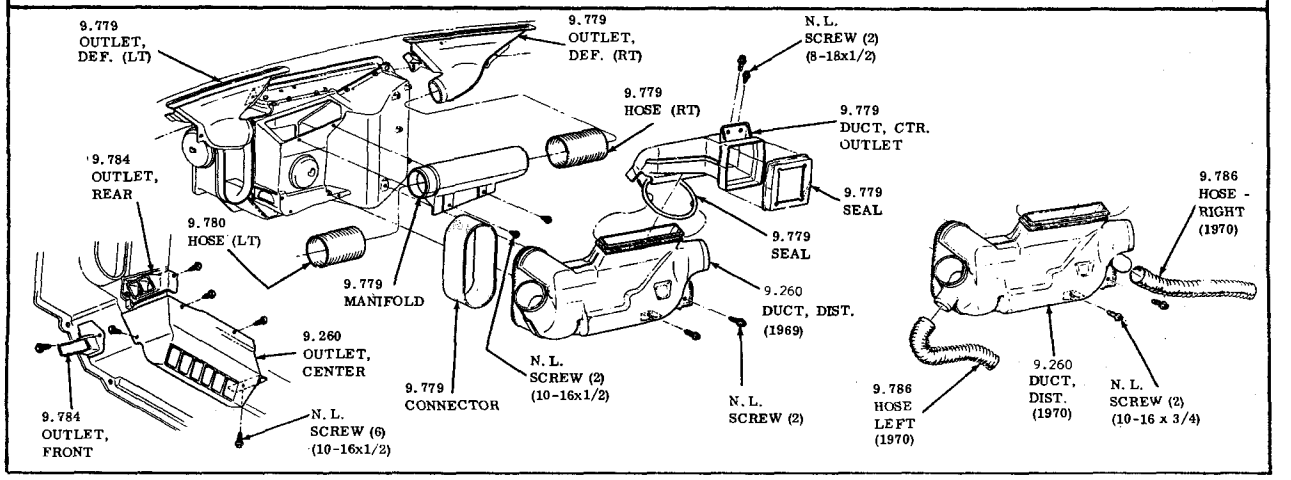

A/C INSTRUMENT PANEL UNITS
1969-1970 -50-60-8000

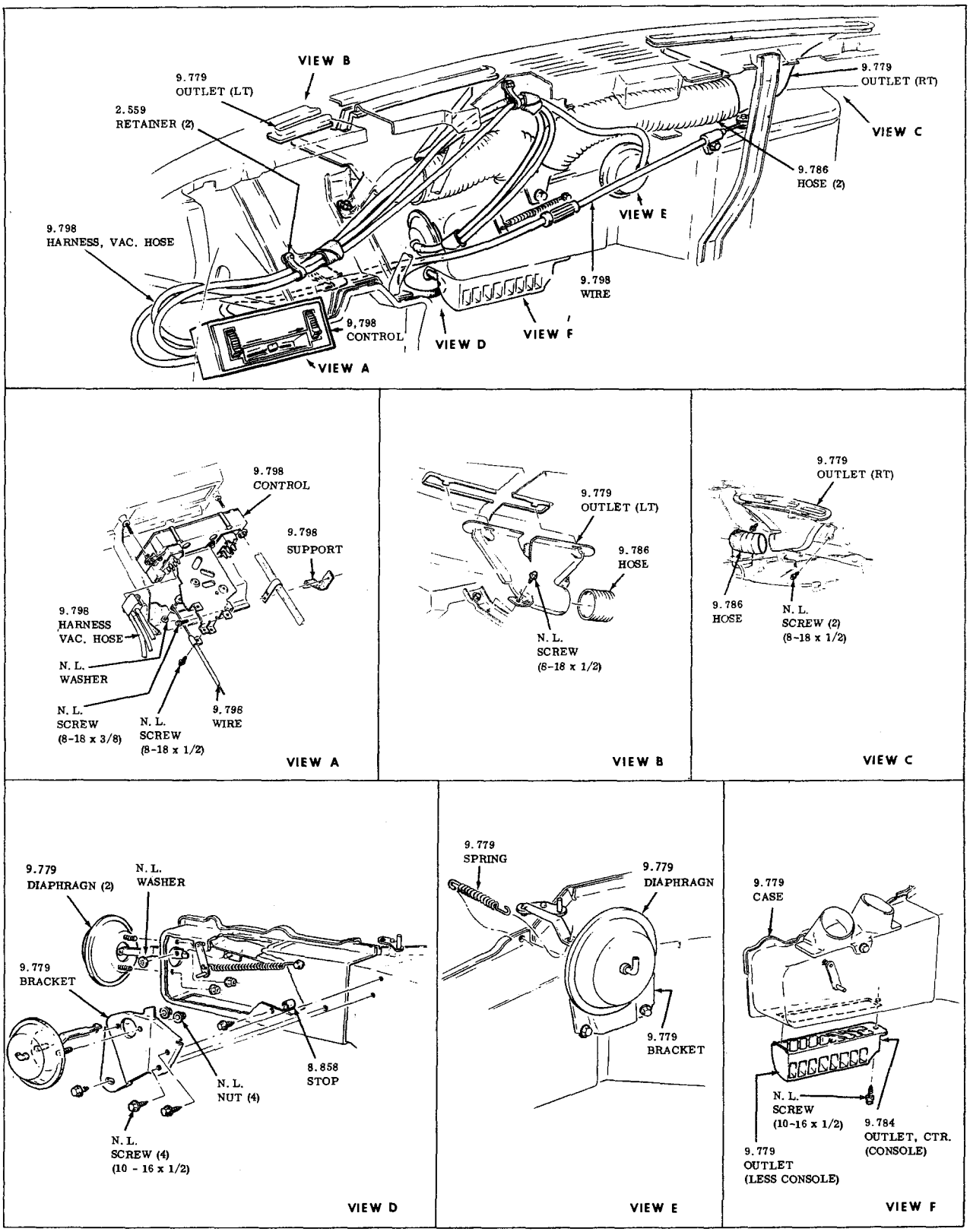

HEATER & DEFROSTER
CONTROLS & HARNESS
1969-1970 -50-60-8000

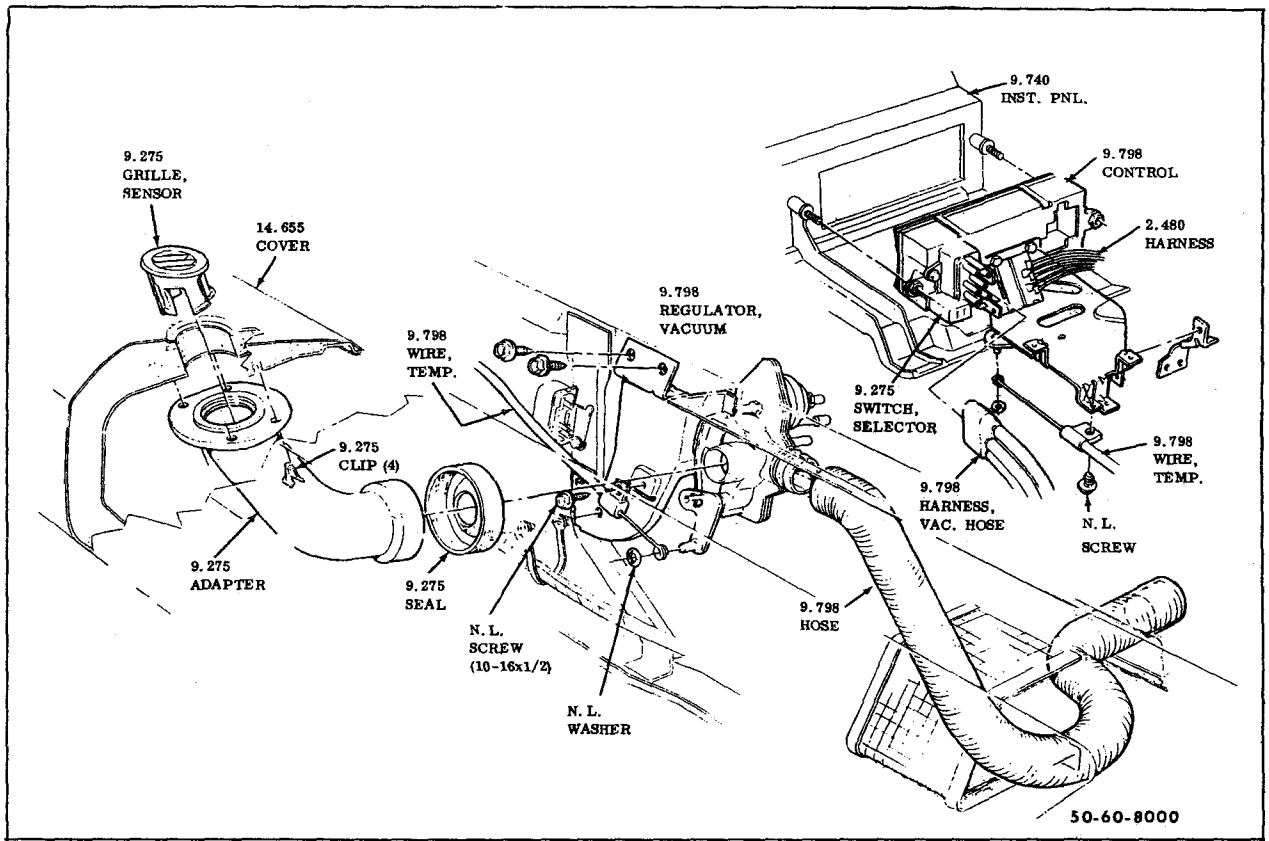

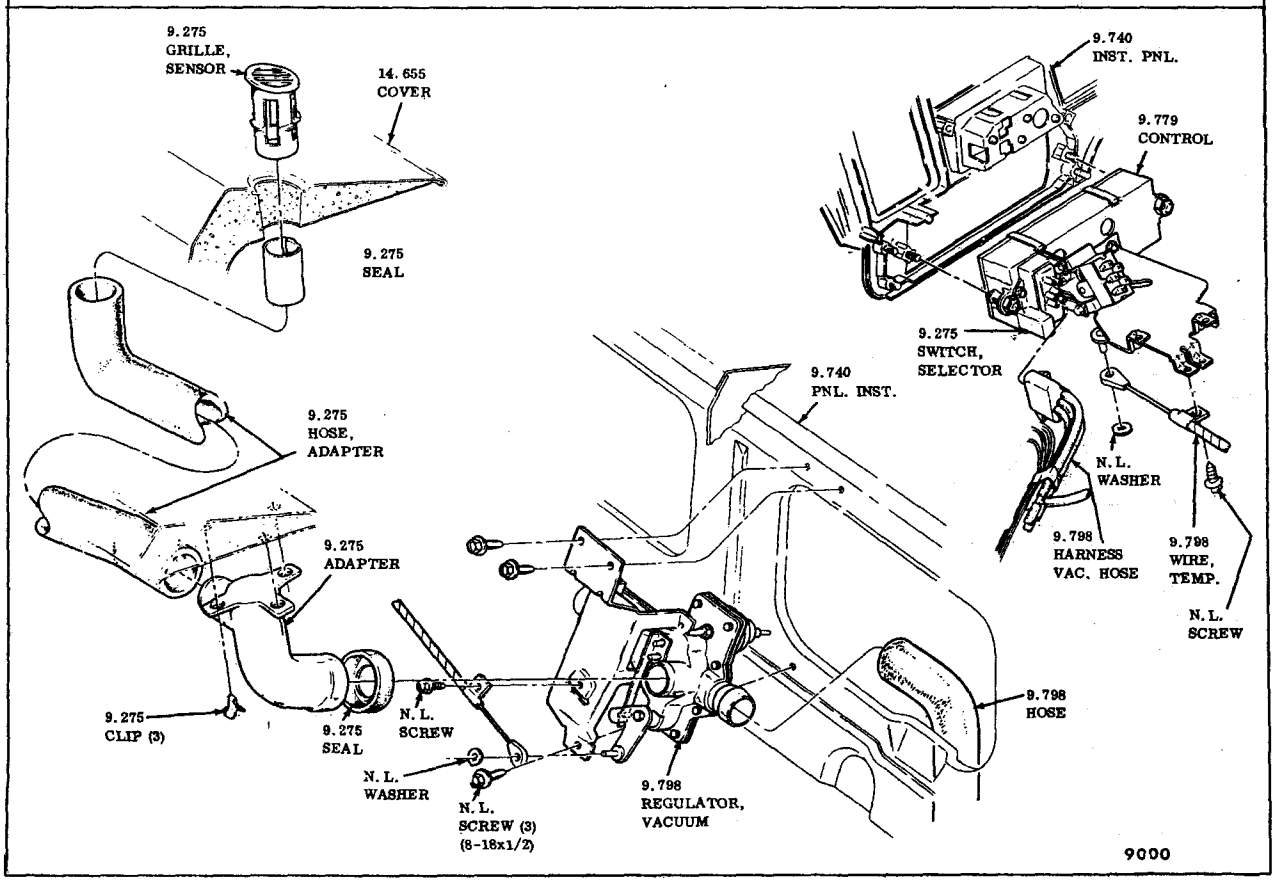

AUTOMATIC CLIMATE CONTROL
REGULATOR, THERMOSTATIC VACUUM
1969-1970-50-60-80-9000

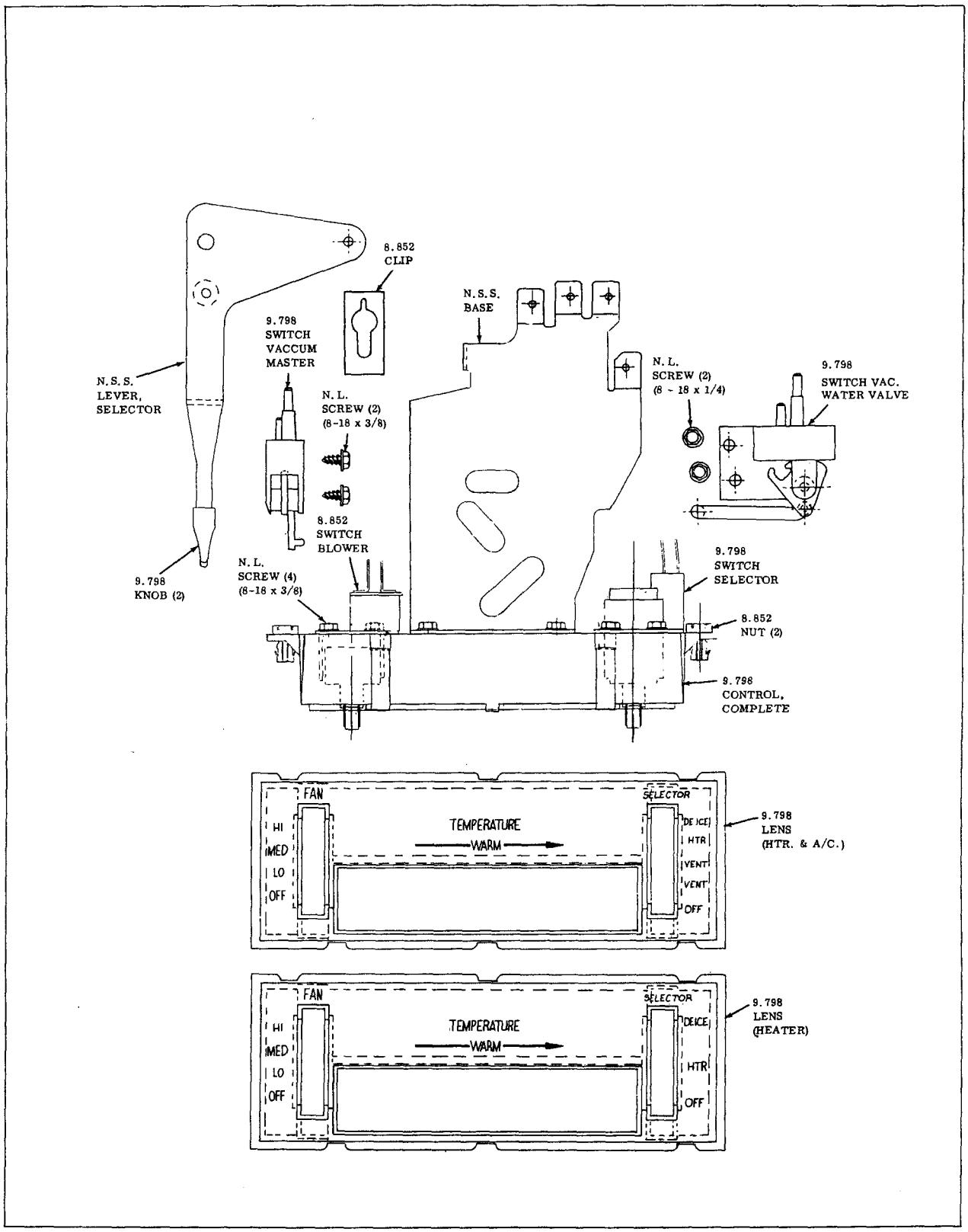

HEATER & DEFROSTER CONTROL (MANUAL)
1969-1970 -50-60-80-9000

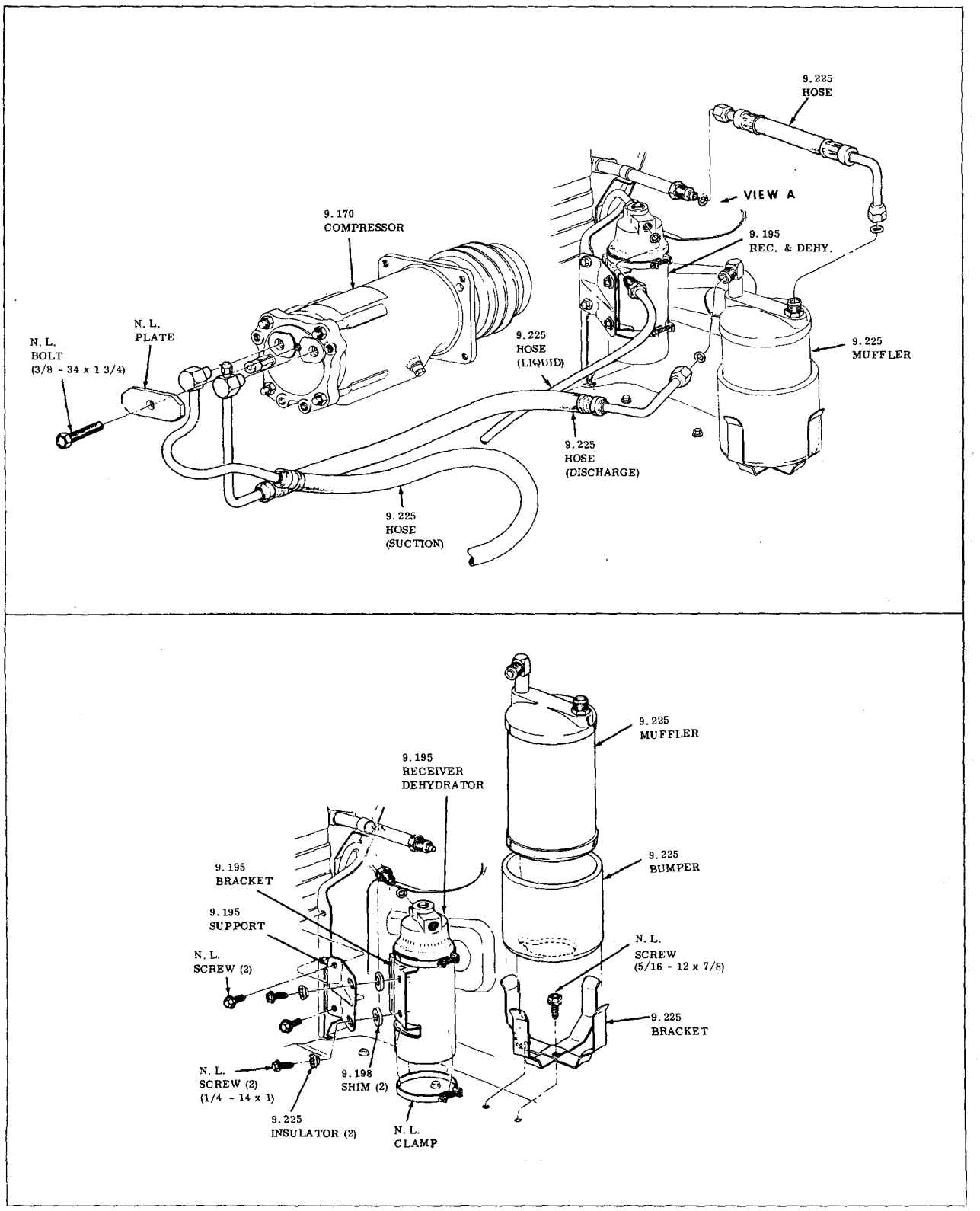

A/C COMPRESSOR, MUFFLER, AND REC. DEHYDRATOR
1969-9000

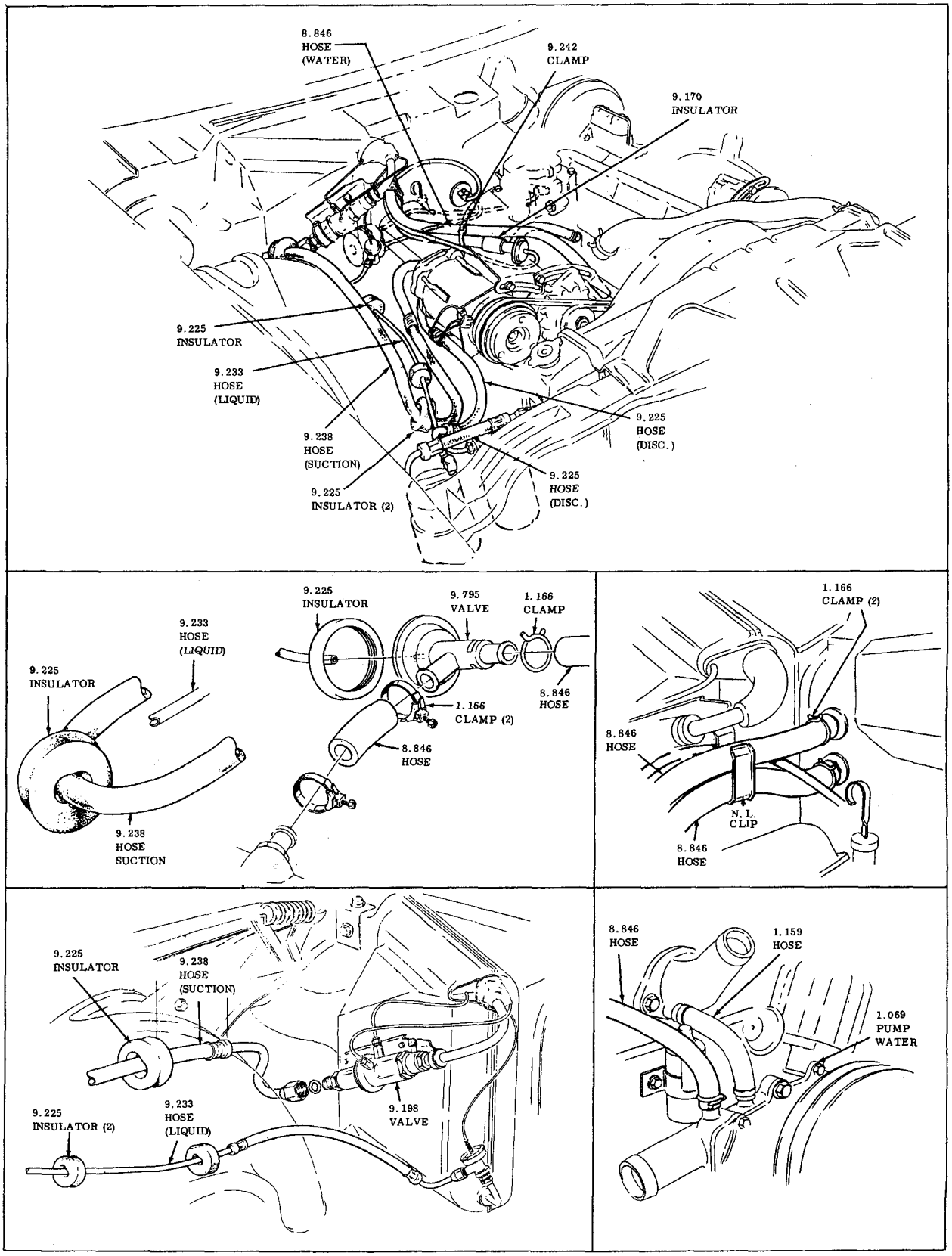

A/C HOSE, WATER, & SUCTION
1969-9000

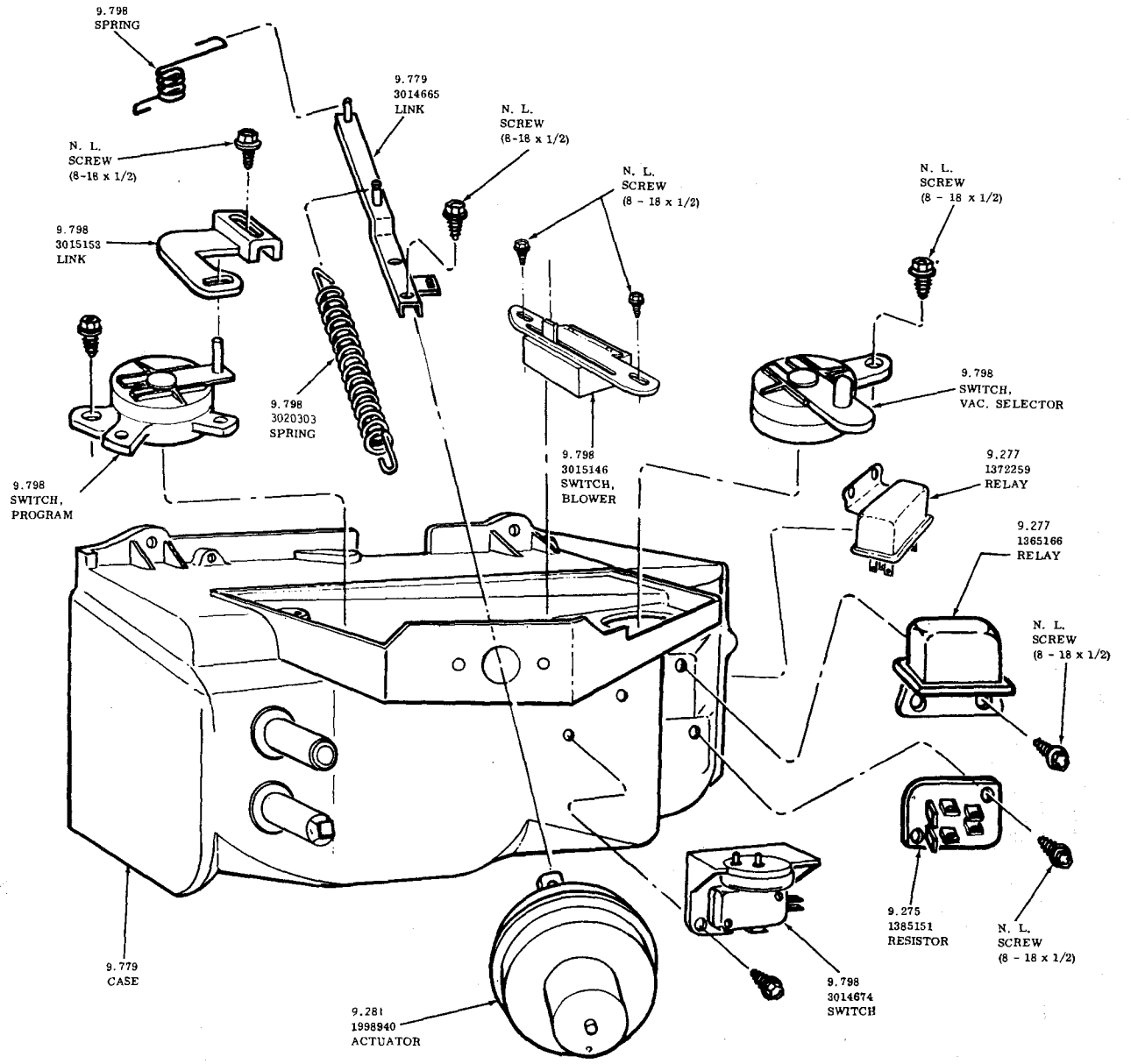

AUTOMATIC CLIMATIC CONTROL
1969-1970 RIVIERA

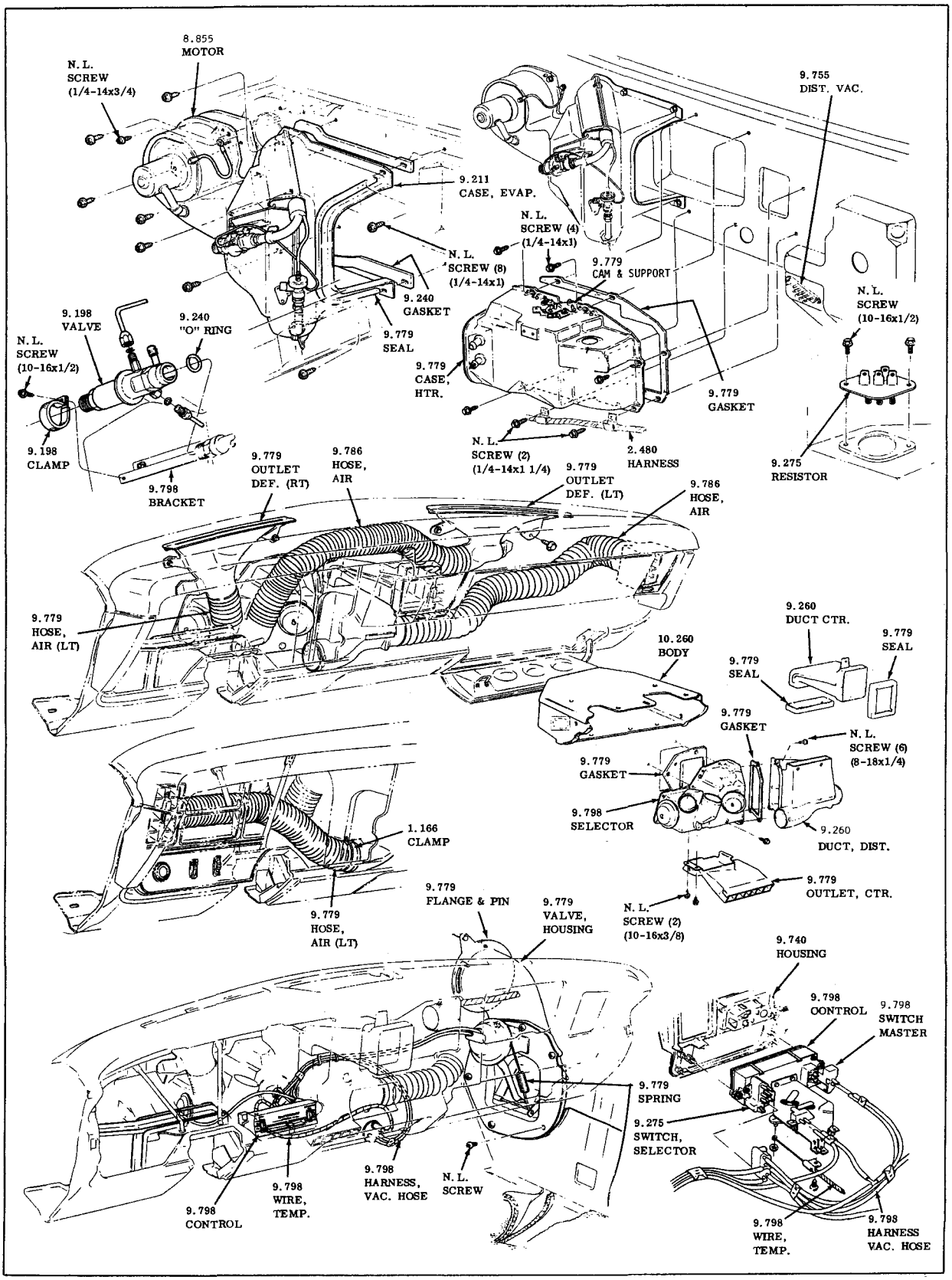

AIR CONDITIONING INSTALLATION
1969-9000

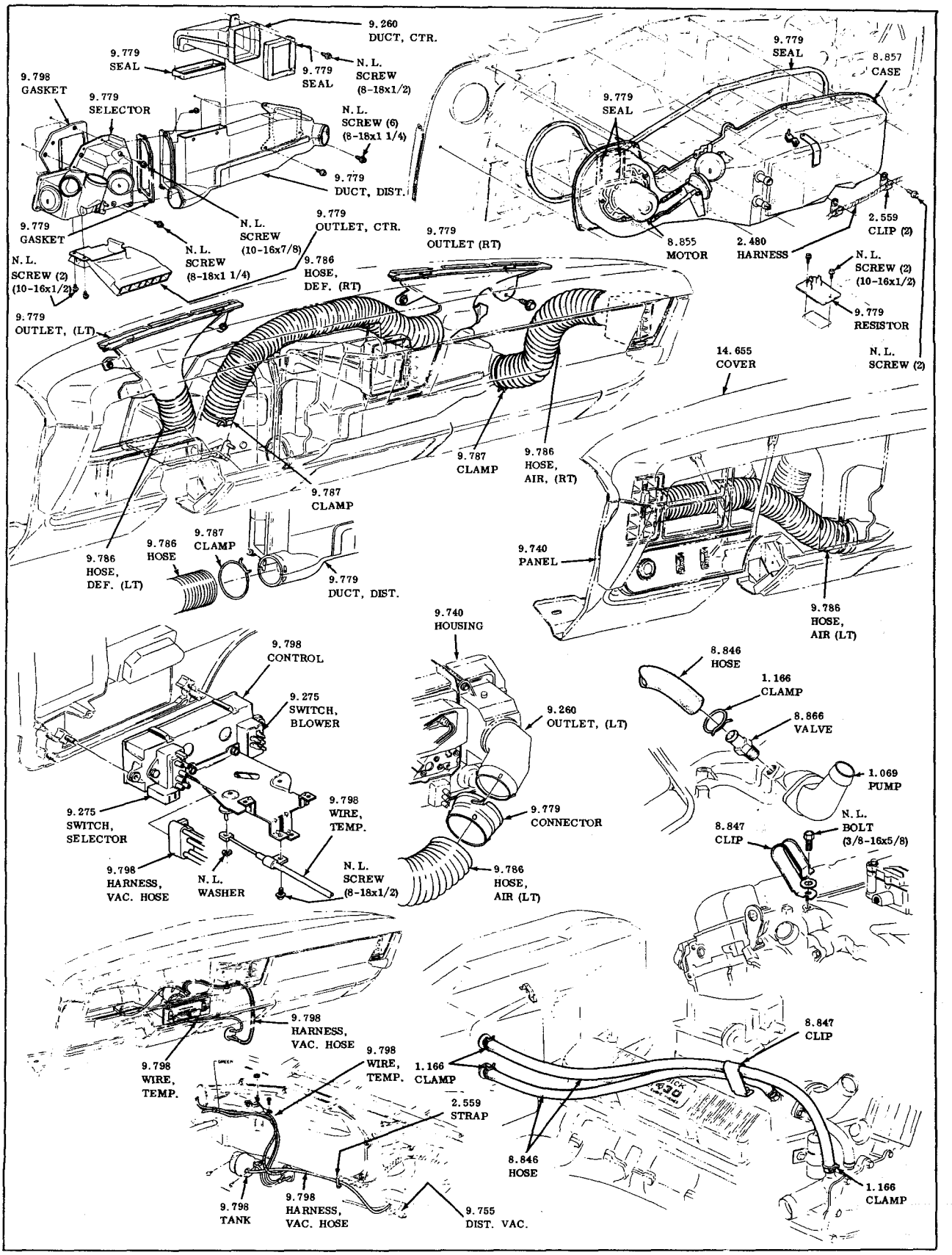

HEATER A DEFROSTER
1969-1970 RIVIERA

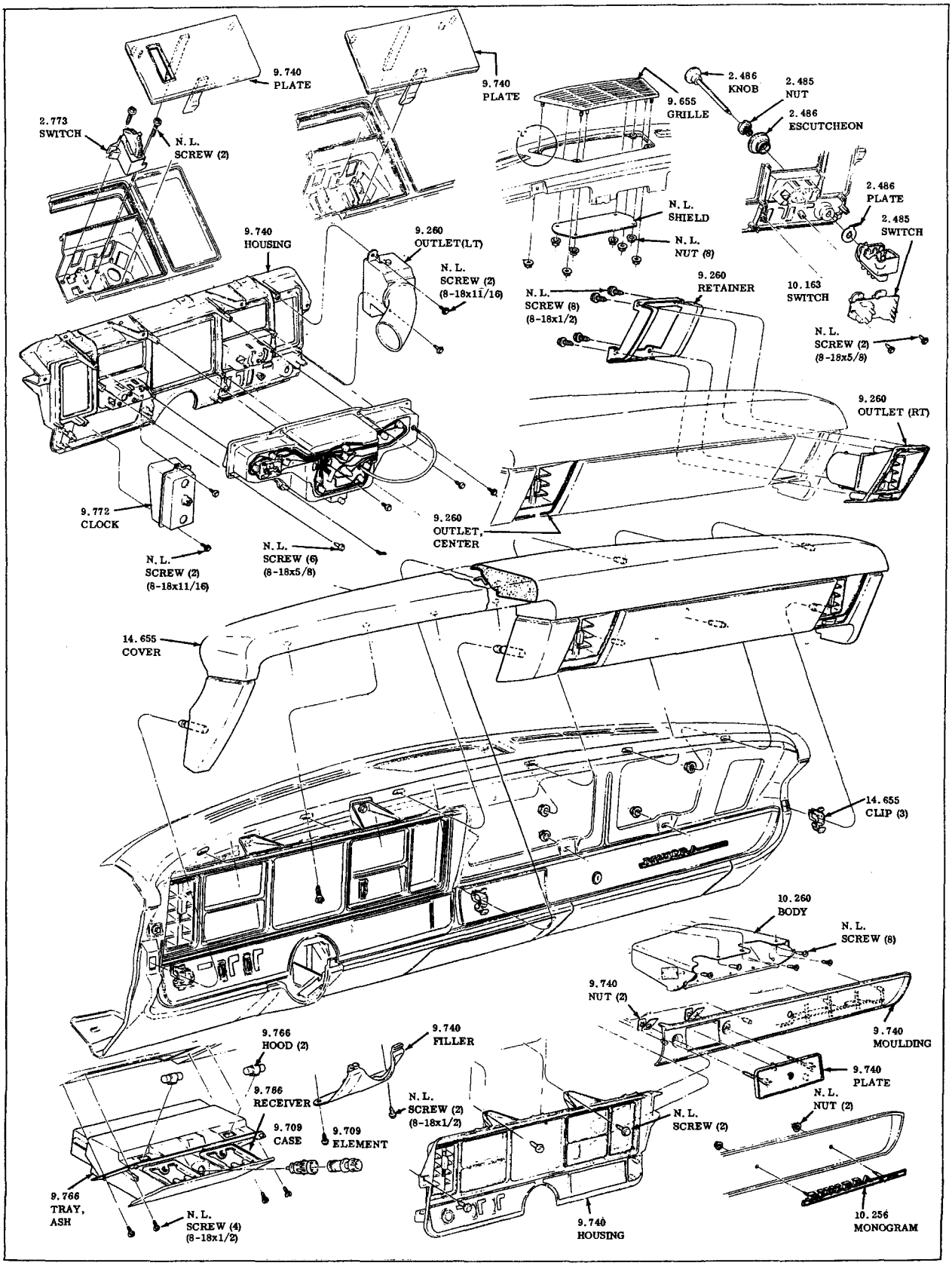

INSTRUMENT PANEL
1969-1970 -9000

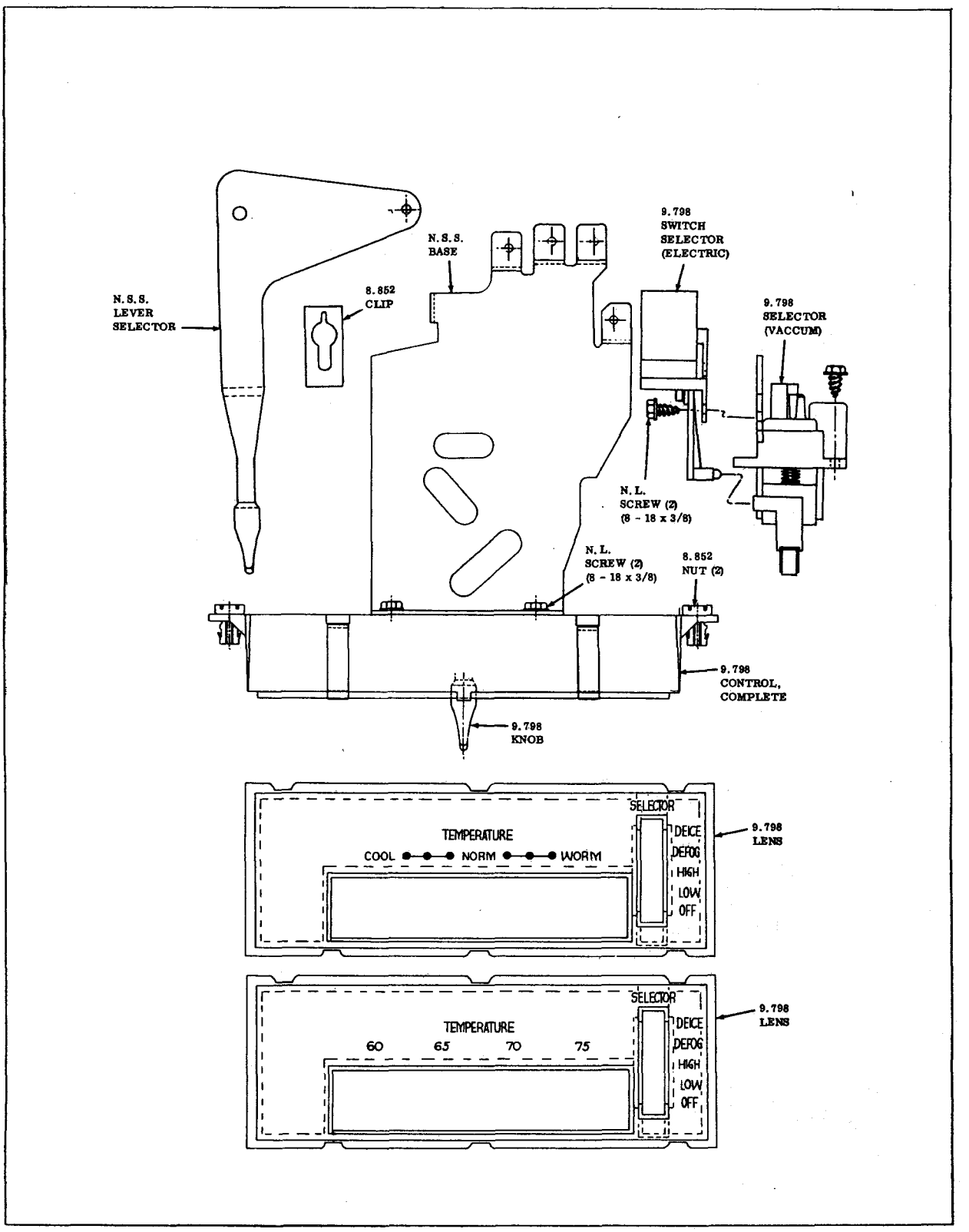

HEATER & DEFROSTER (AUTO, CLIMATIC CONTROL)
1969-ALL

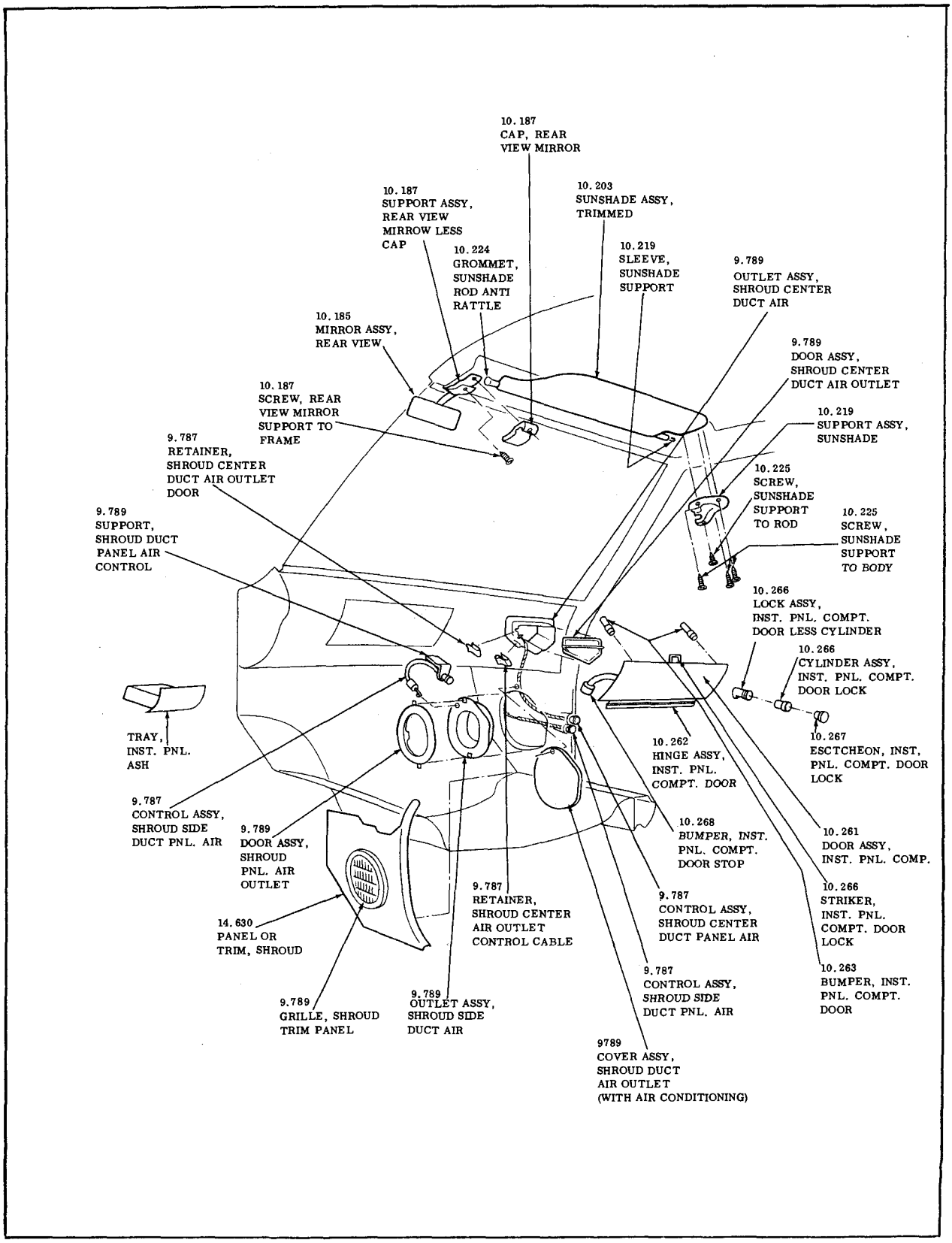

1969-1971 BODY FRONT END HARDWARE (TYPICAL)

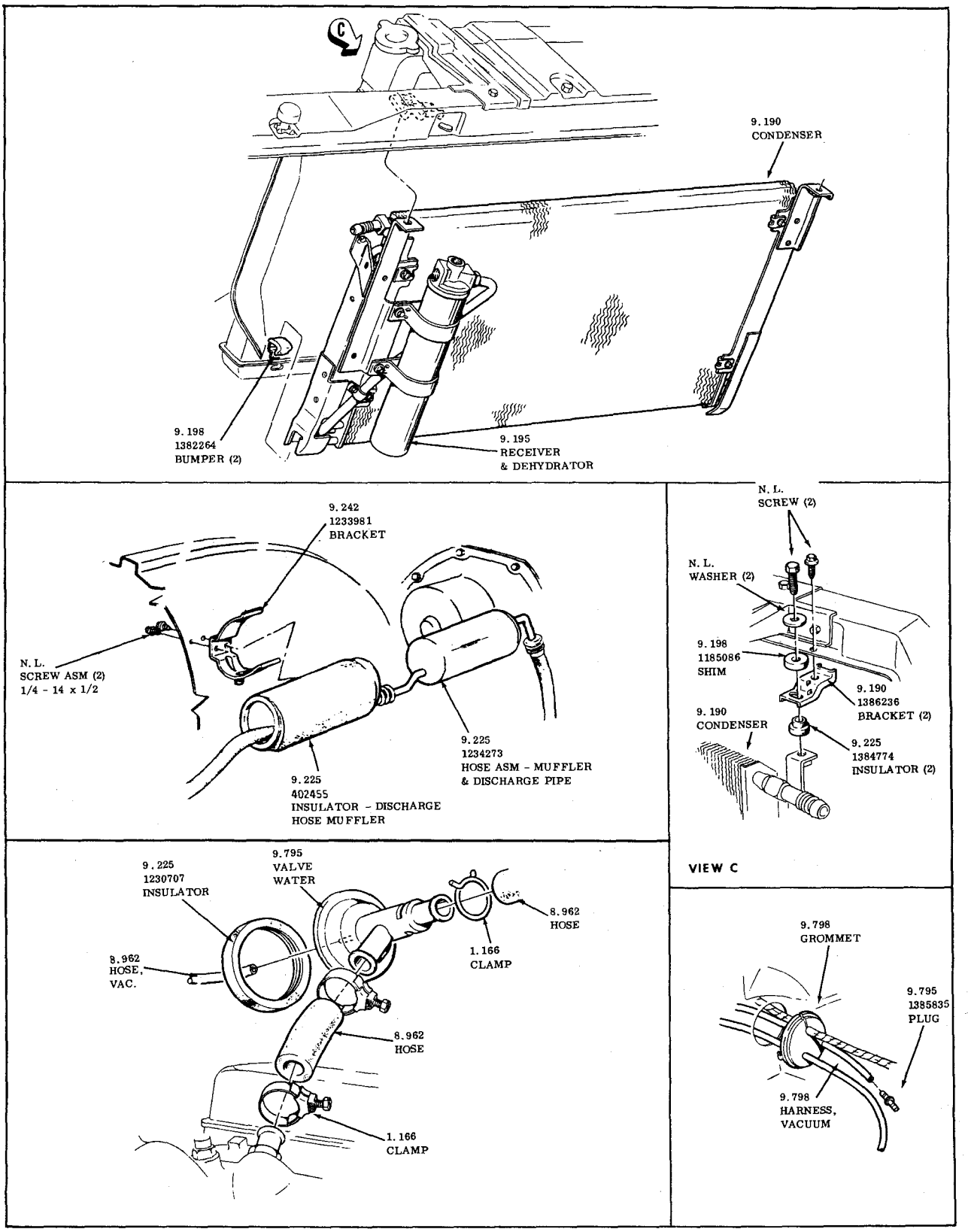

A/C RECEIVER DEHYDRATOR, MUFFLER, A WATER VALVE
1970-30-4000

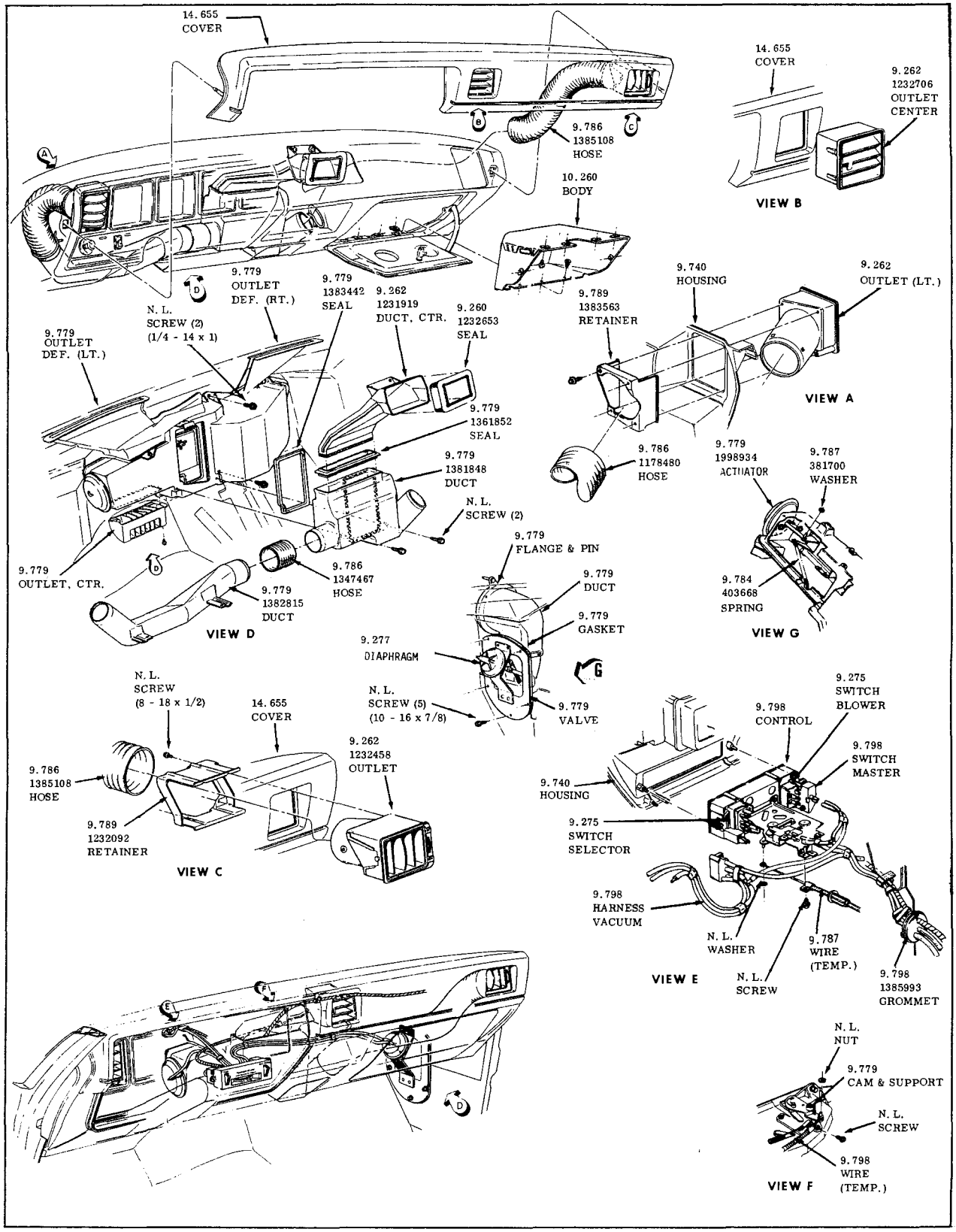

A/C INSTRUMENT PANEL UNITS
1970-30-4000

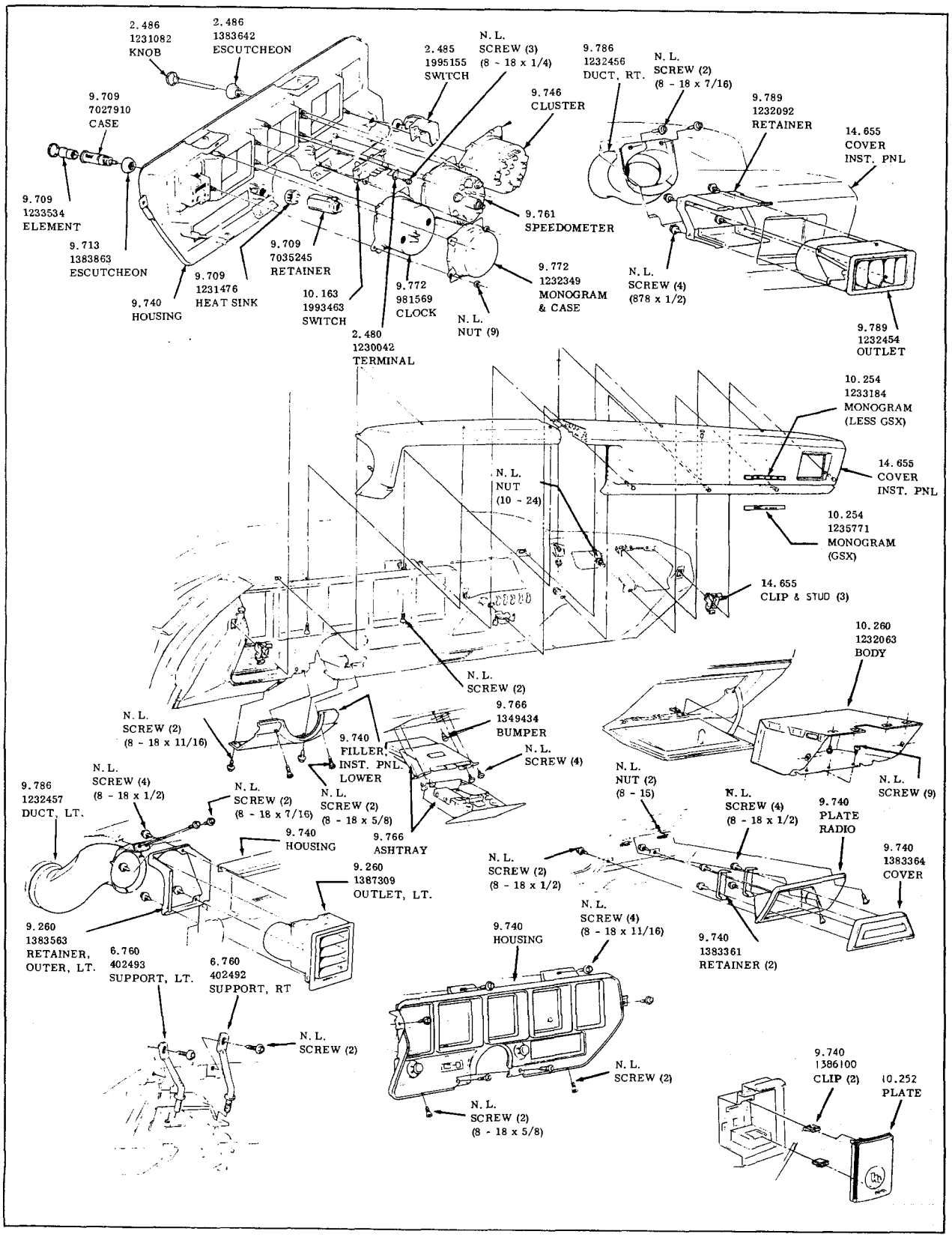

INSTRUMENT PANEL

1970-1972 30-4000

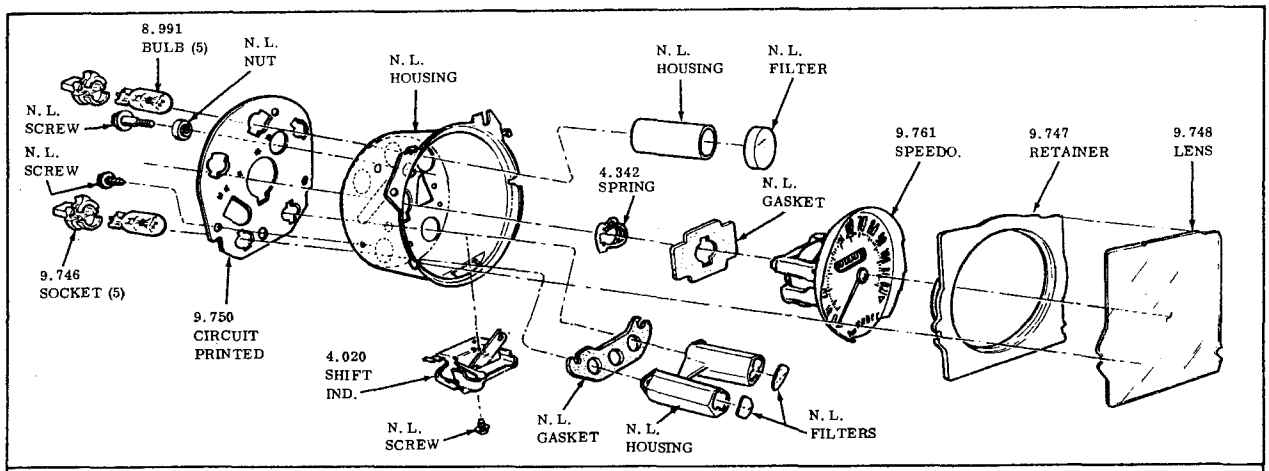

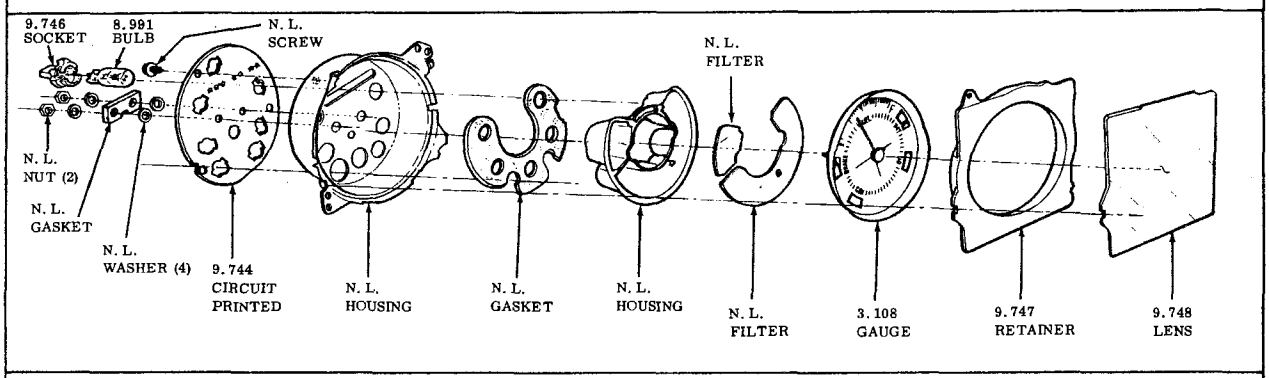

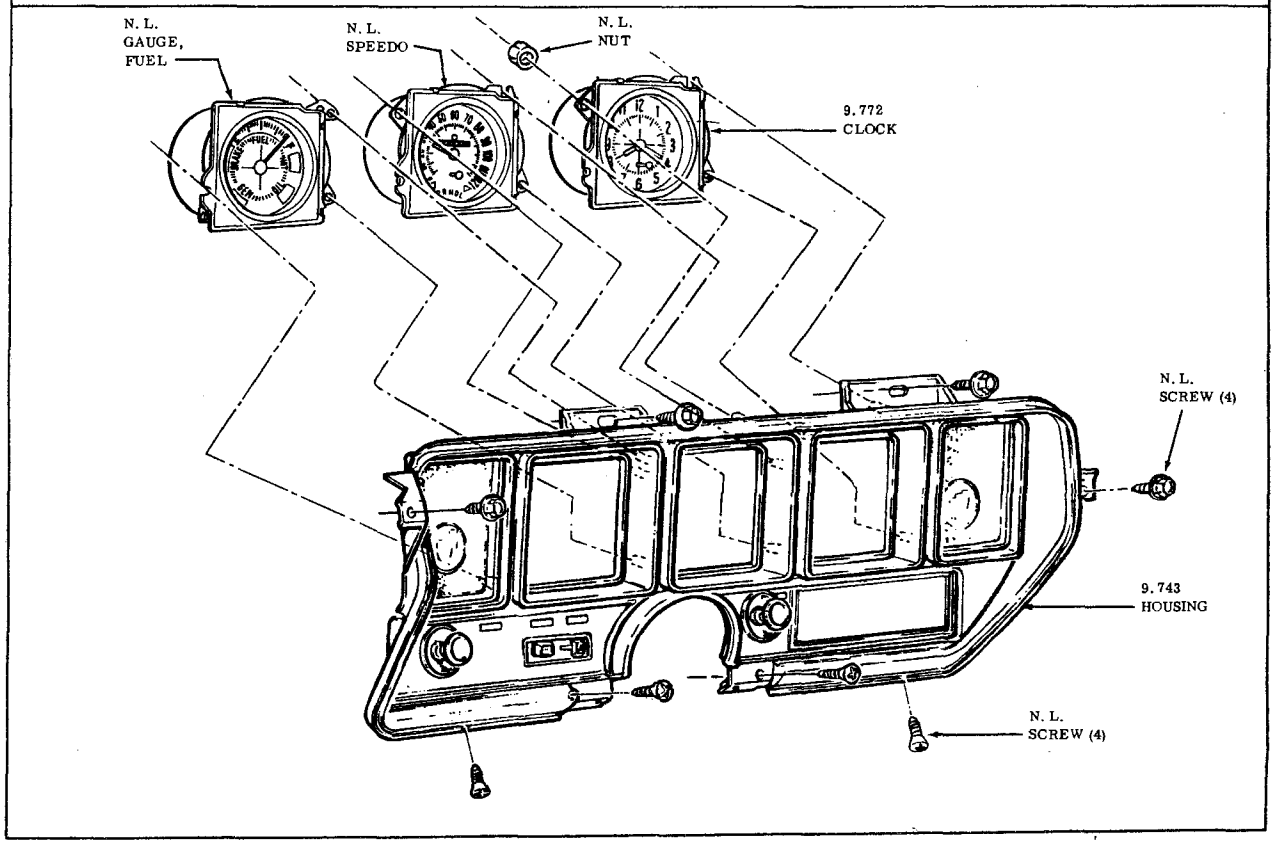

INSTRUMENT CLUSTER
1970-1972 30-4000

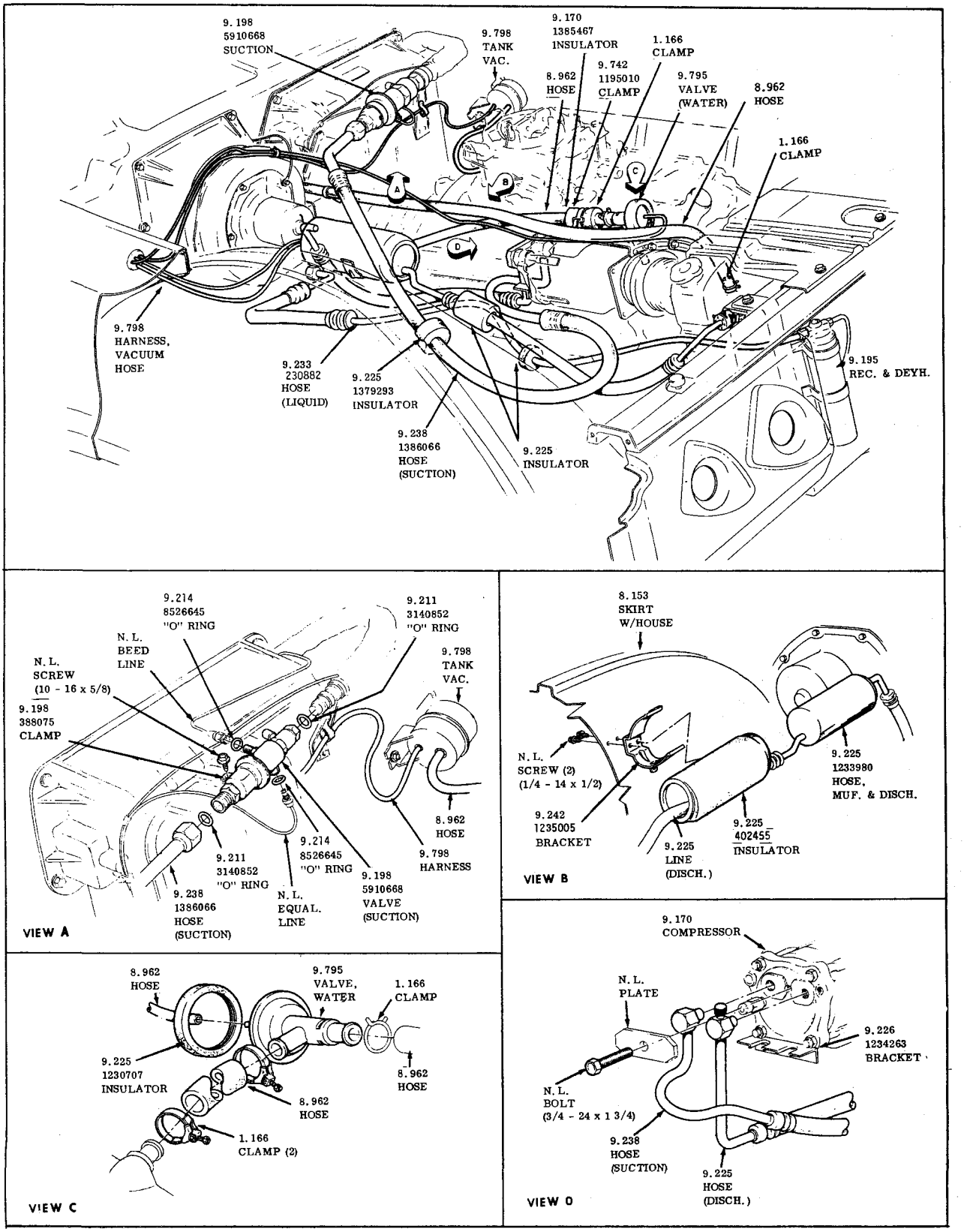

AIR CONDITIONING ENGINE UNIT

1970-50-60-8000

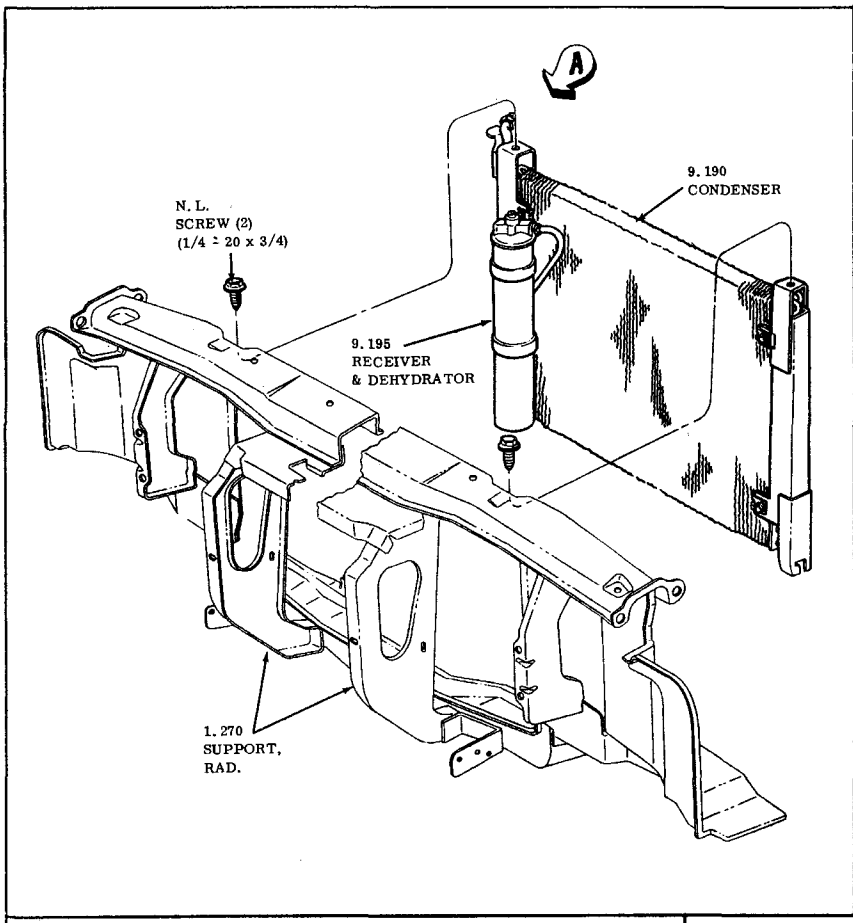

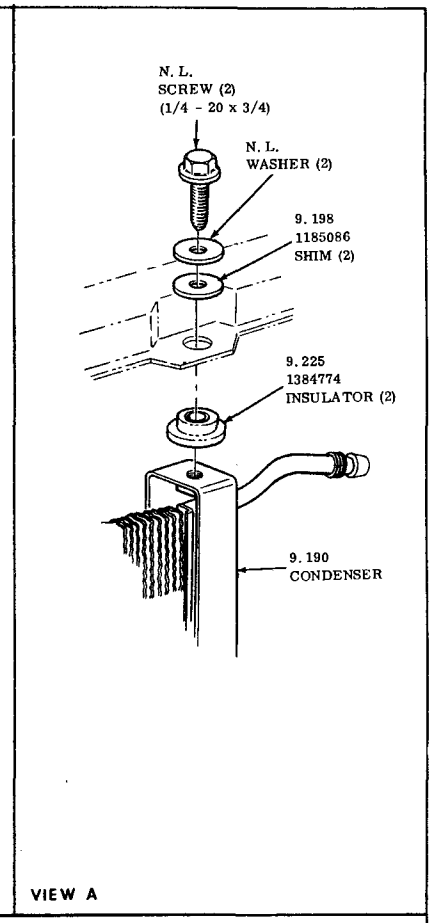

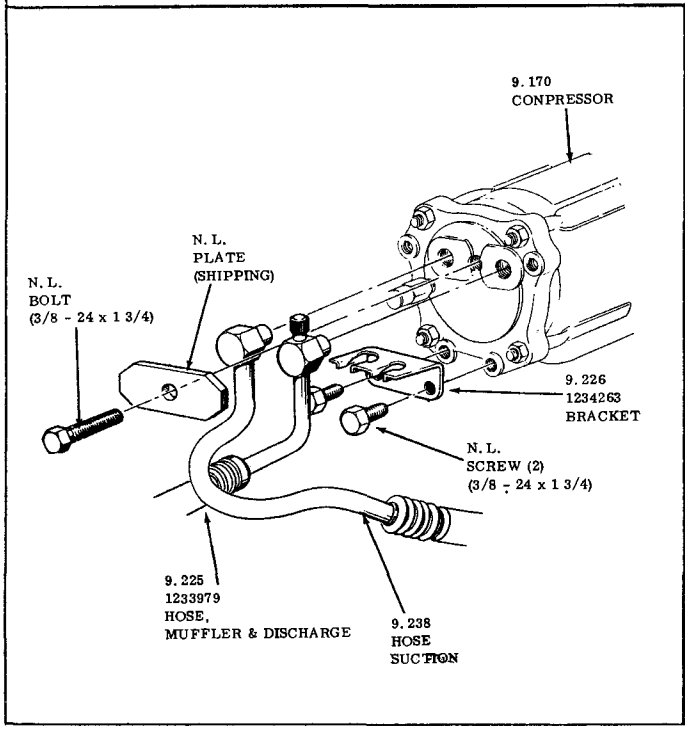

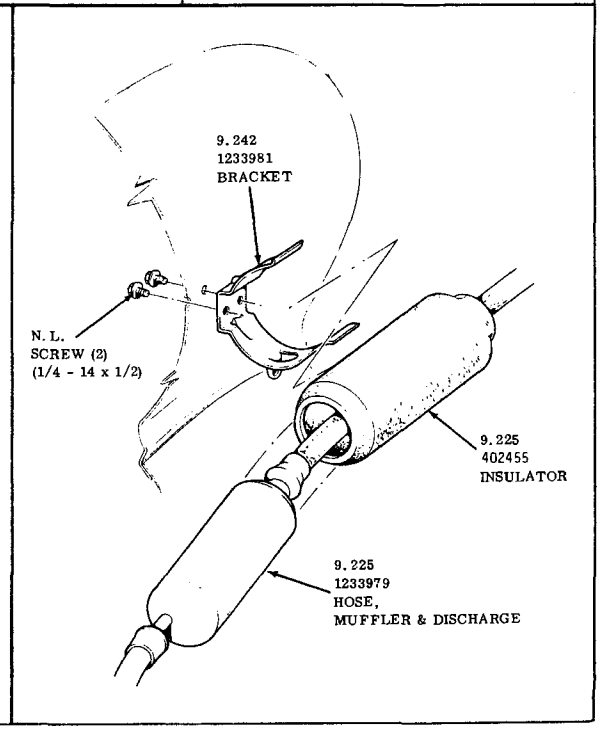

A/C COMPRESSOR, MUFFLER, & REC. DEHYDRATOR
1970-9000

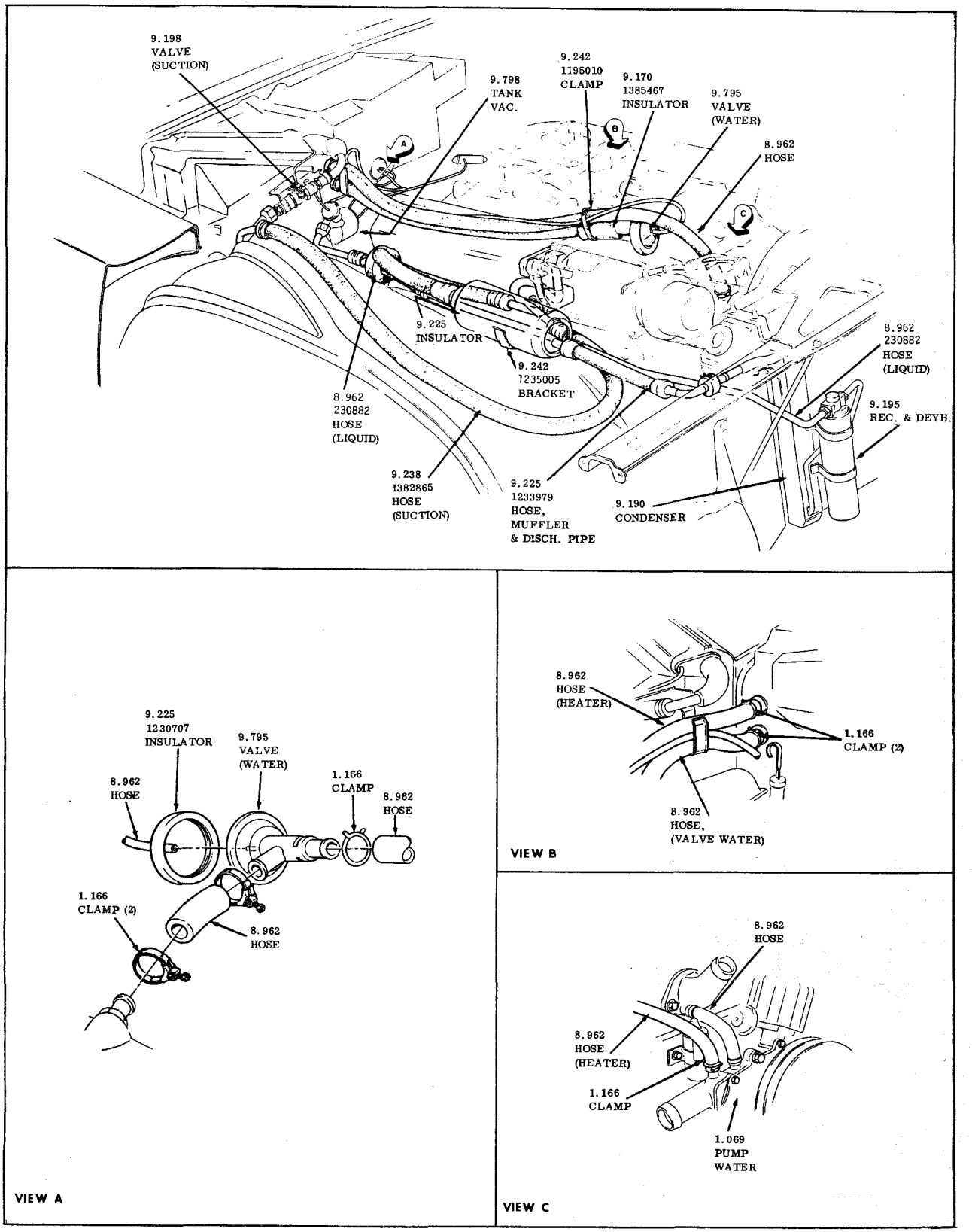

A/C HOSE, WATER, A SUCTION
1970-9000

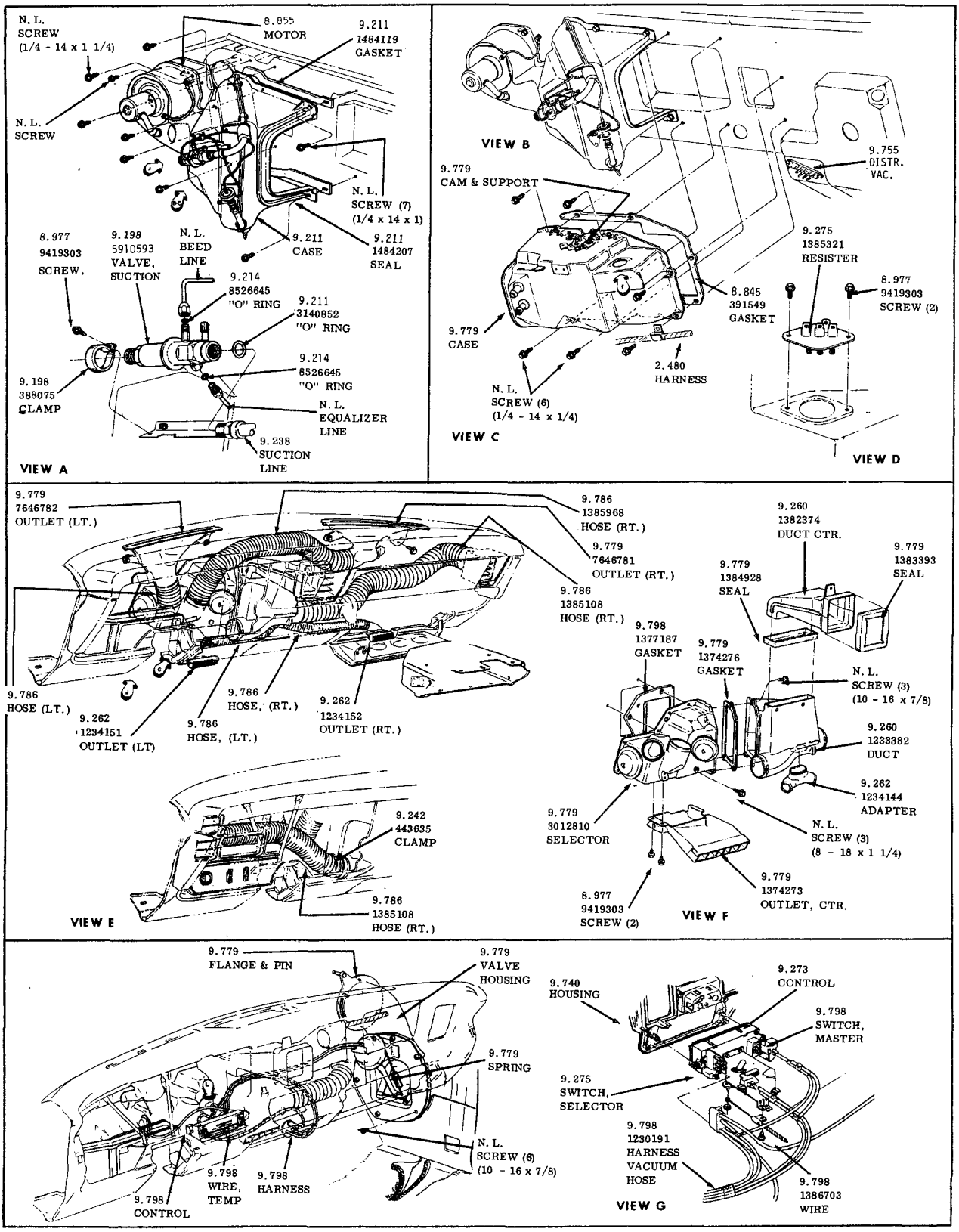

AIR CONDITIONING INSTALLATION
1970-9000

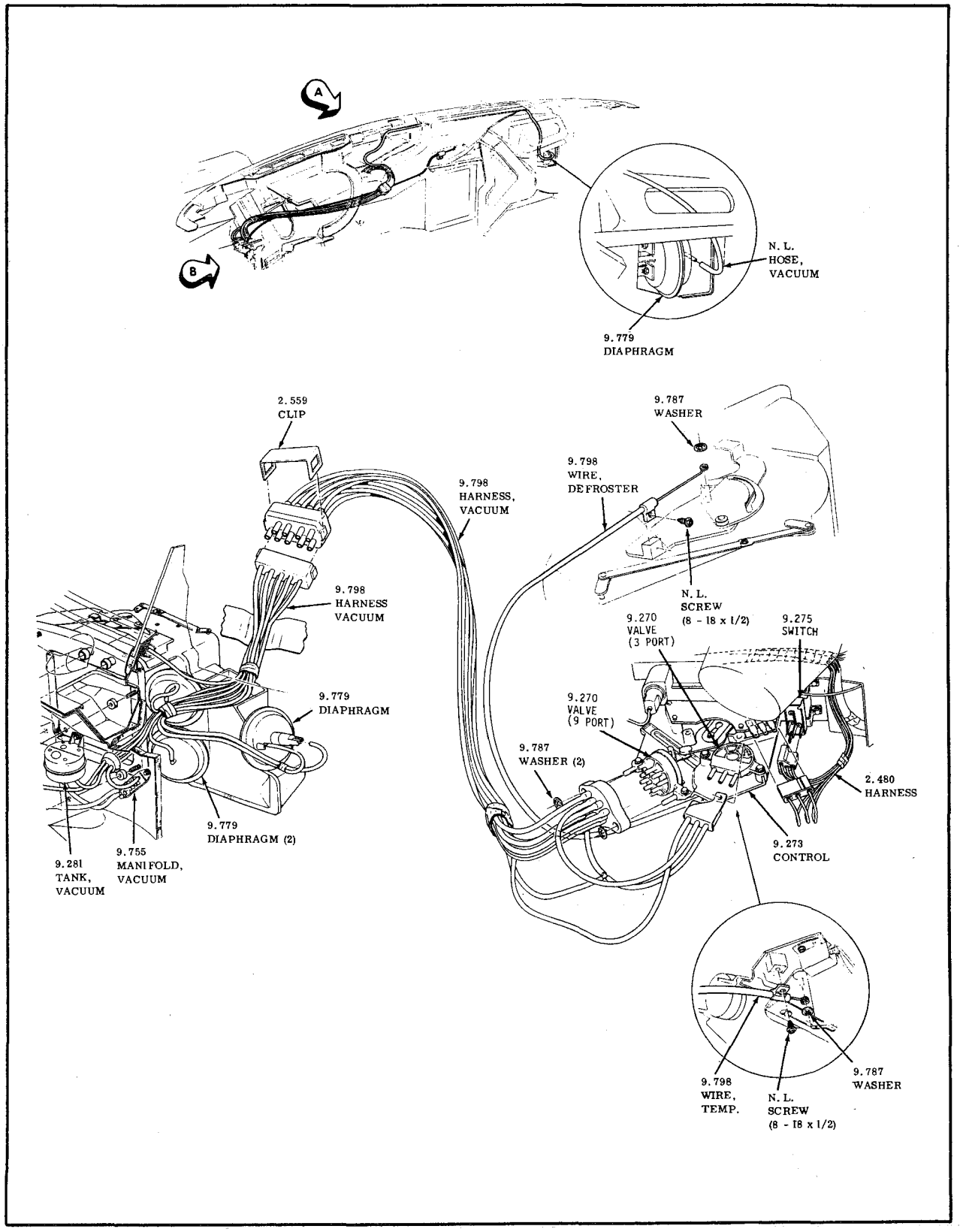

AIR CONDITIONING INSTRUMENT PANEL
CONTROLS AND HARNESS
1970-50-60-80-9000

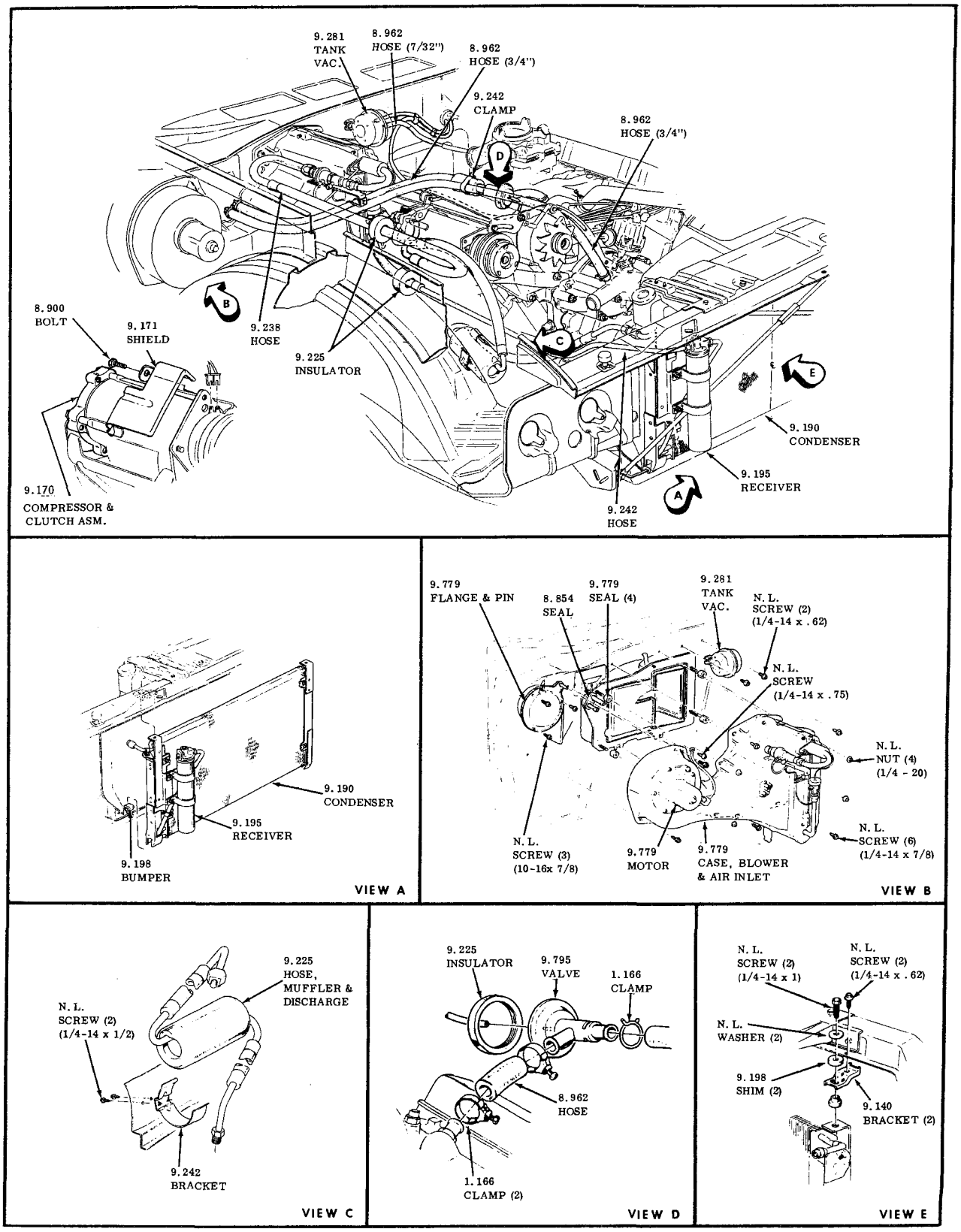

AIR CONDITIONING ENGINE UNIT

1971-1972 30-4000

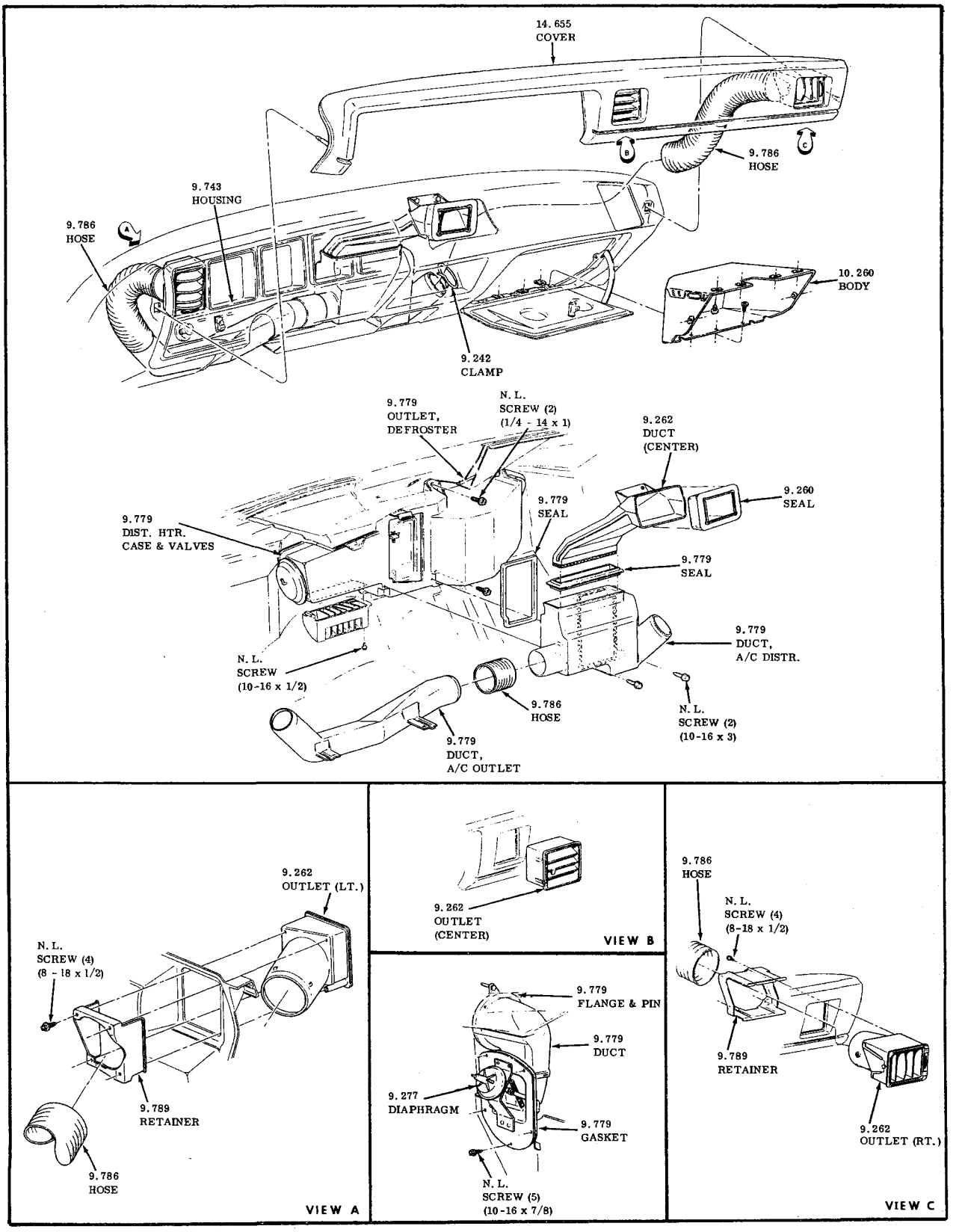

A/C AND HEATER INST. PANEL OUTLETS

1971 - 1972 30-4000

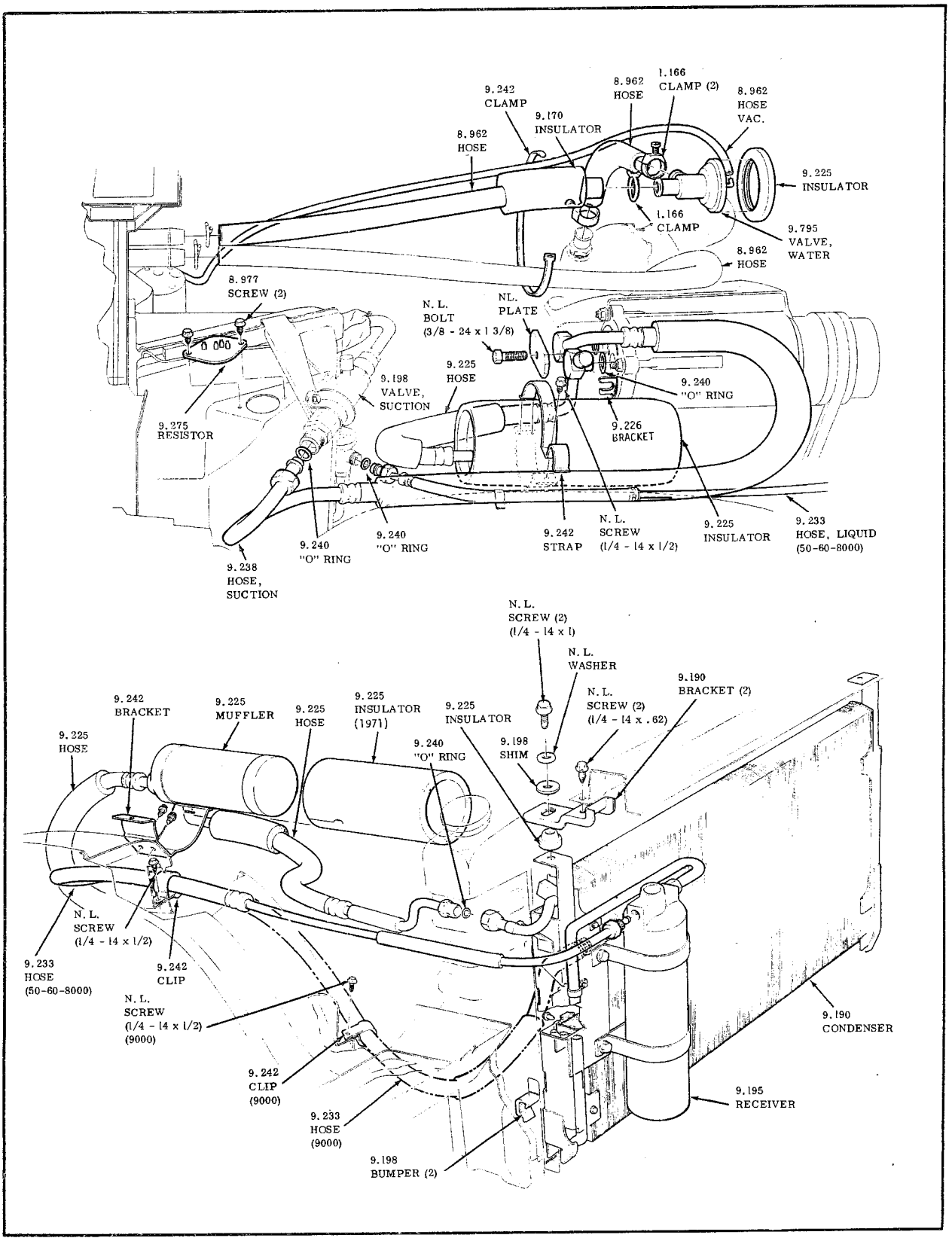

AIR CONDITIONING ENGINE UNIT

1971- 1972 50-60-80-9000

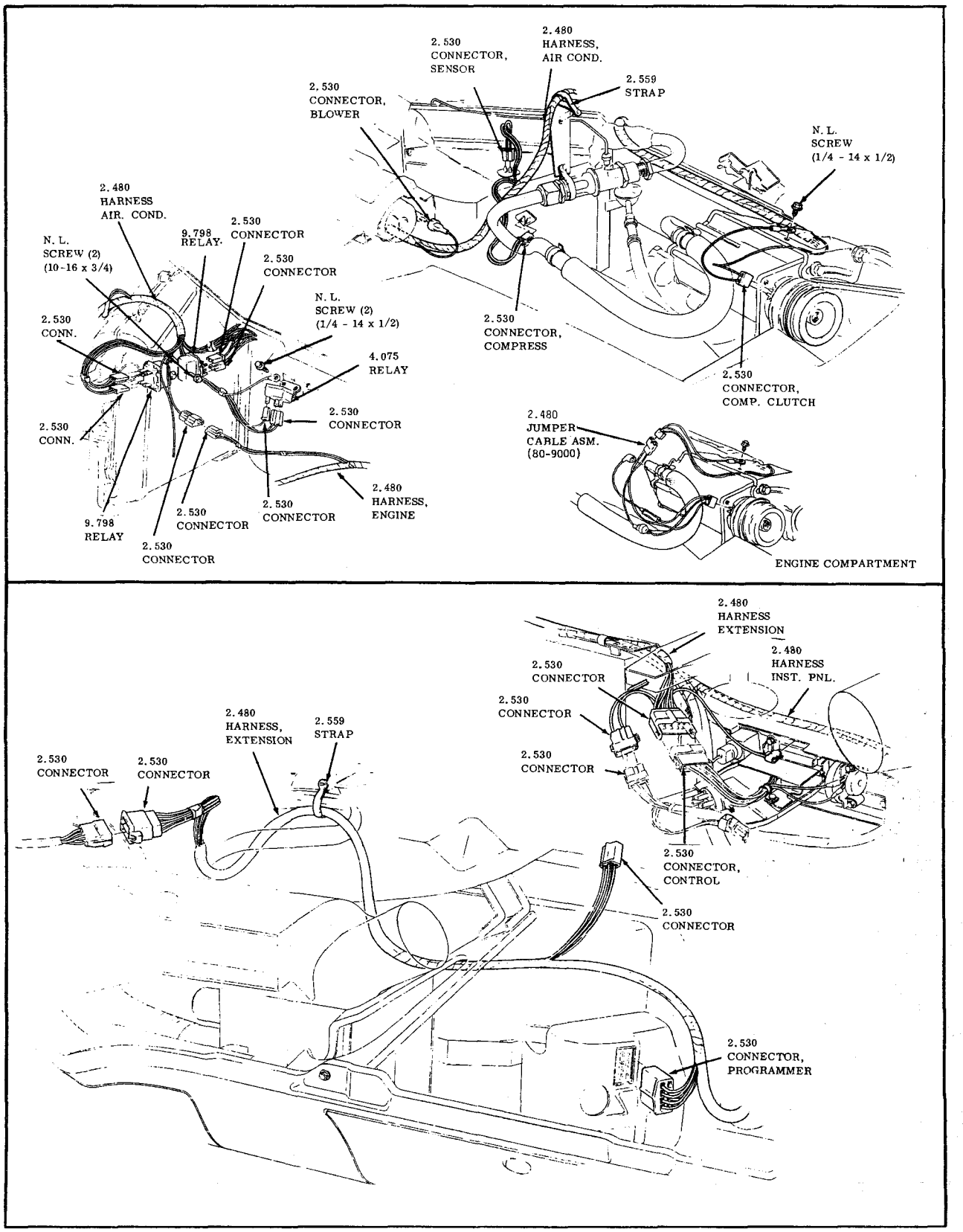

AUTOMATIC CLIMATIC CONTROL WIRING

1971-1972 50-60-80-9000

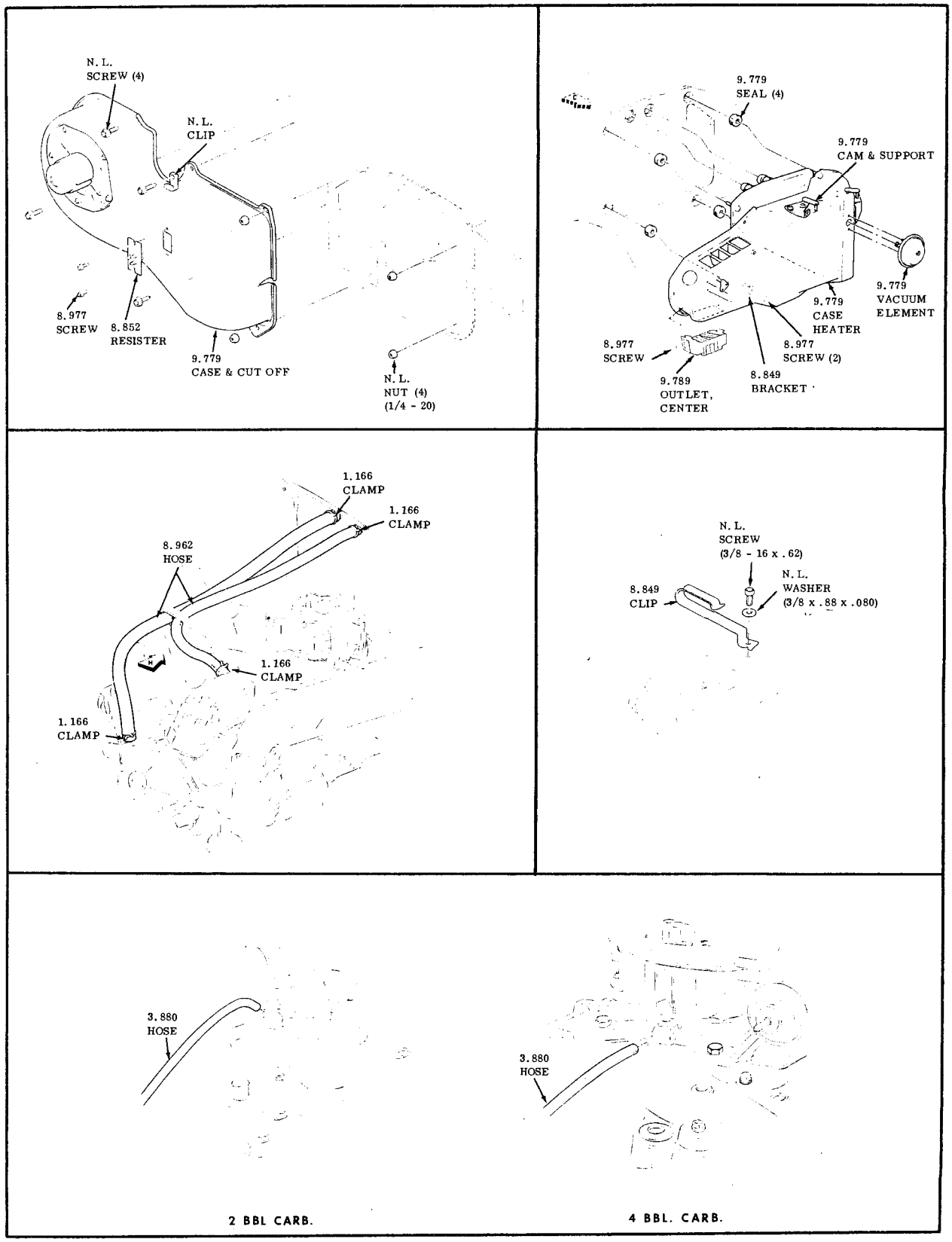

HEATER AND DEFROSTER
1971-1972 50-60-80-9000

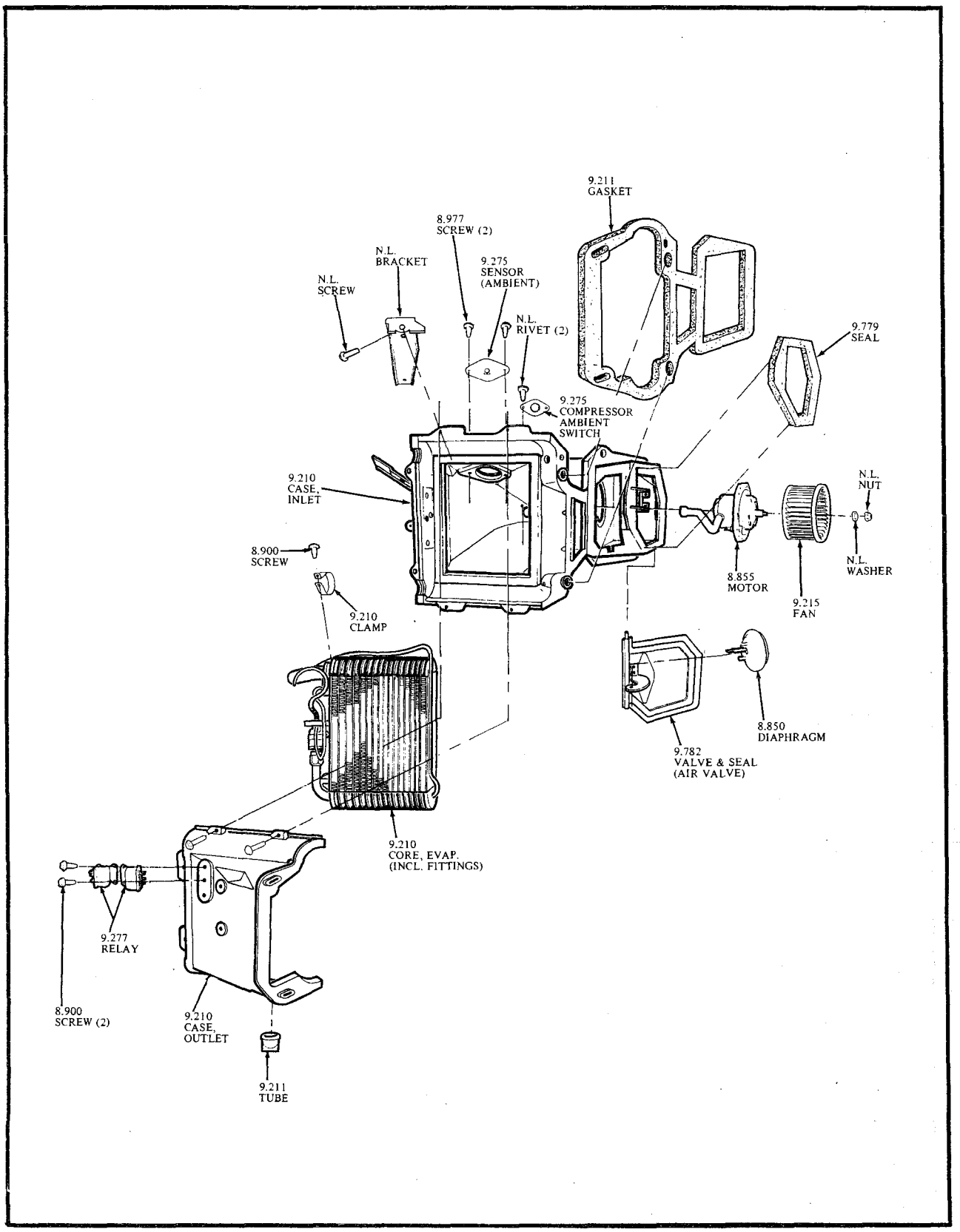

EVAPORATOR AND BLOWER (AUTOMATIC)

1971 - 1972 50-60-80-9000

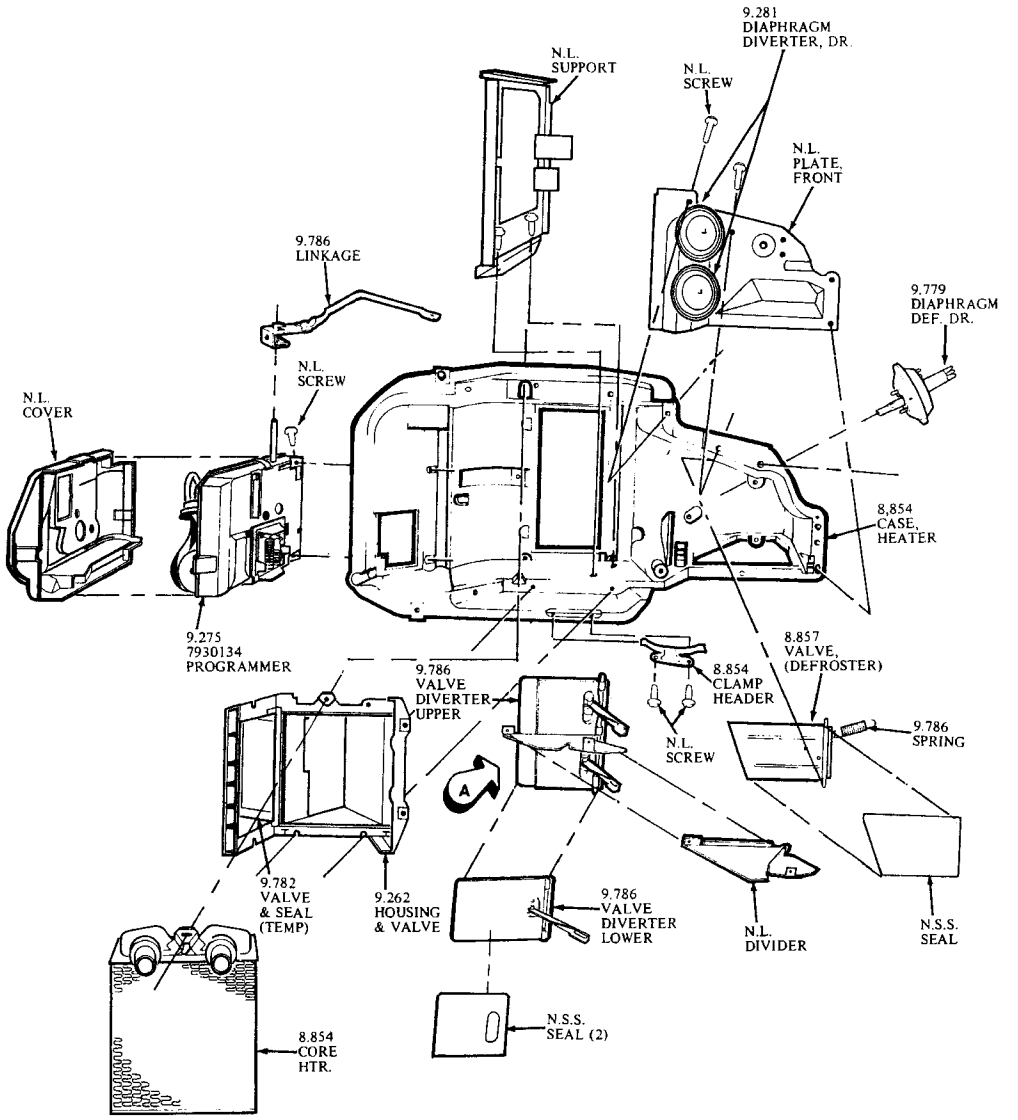

HEATER AND AIR CONDITIONING (AUTOMATIC)

1971 - 1972 50-60-80-9000

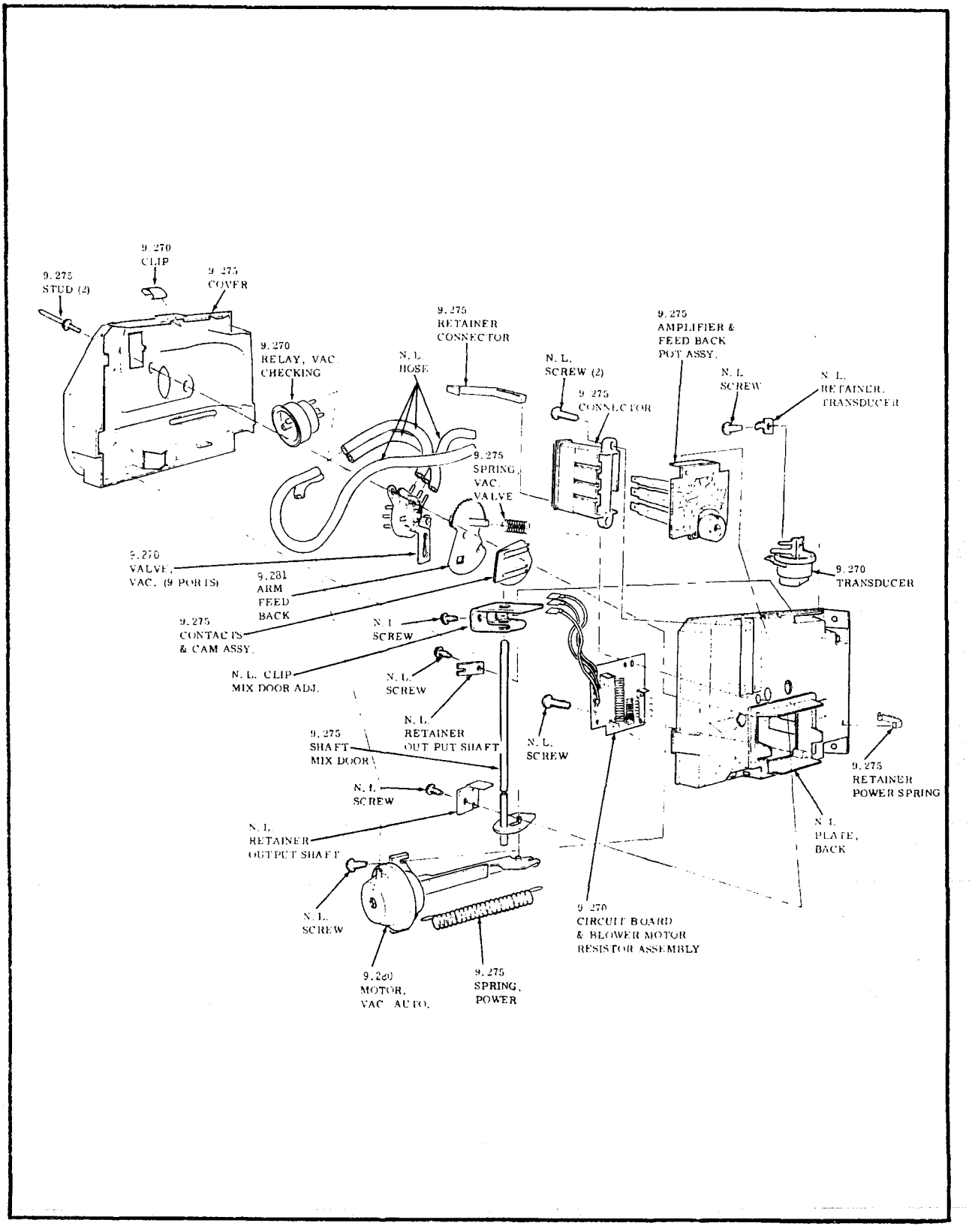

AUTOMATIC TEMPERATURE CONTROL

PROGRAMMER

1971 - 1972 50-60-80-9000

MEMORANDA

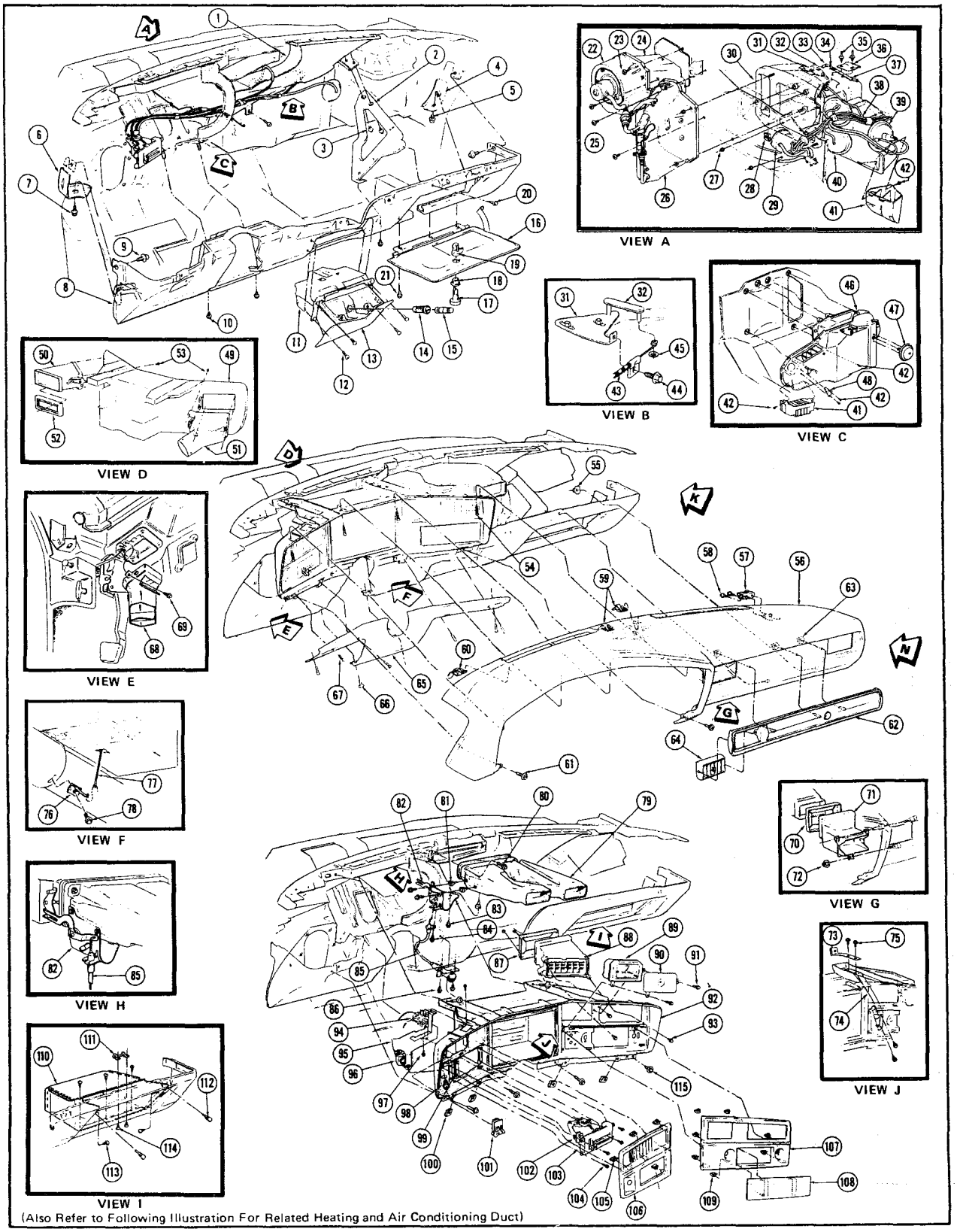

(Also Refer to Following Illustration For Related Heating and Air Conditioning Duct)

INSTRUMENT PANEL
1971-72-B-C-E

INSTRUMENT PANEL
1971-72-B-C-E

1.	NOZZLE, Defroster Air	9.779
2.	SUPPORT, Instrument Panel, Center	10.230
3.	SCREW, Instrument Panel Ctr. (5/16-12 x 3/4) (2)	N.L.
4.	SUPPORT, Instrument Panel, End (Rt.)	10.230
5.	SCREW, Instrument Panel End (5/16-12 x 3/4)	N.L.
6.	SUPPORT, Instrument Panel, End (Lt.)	10.230
7.	SCREW, Instrument Panel End (5/16-12 x 3/4)	N.L.
8.	PANEL, Instrument, Lower	10.230
9.	SCREW, Instrument Panel Lower (1/4-14 x 1) (2)	N.L.
10.	SCREW, Instrument Panel Lower (1/4-14 x 3/4) (2)	N.L.
11.	TRAY, Ash Receiver	9.766
12.	SCREW, Tray Ash (8-18 x 1/2) (4)	N.L.
13.	RECEIVER, Ash Trav	9.766
14.	CASE & CIRCUIT BREAKER, Cigar Lighter	9.709
15.	ELEMENT & KNOB, Cigar Lighter	9.709
16.	DOOR, Instrument Panel Compartment	10.261
17.	CYLINDER, Instrument Panel Compartment Door	10.266
18.	ESCUTCHEON, Instrument Panel Compartment Lock	10.267
19.	CASE & ROTOR, Instrument Panel Compartment Lock	10.266
20.	SCREW, Instrument Panel Center (1/4-14 x 1/2) (2)	N.L.
21.	SCREW, Compartment Door to Lower Panel (8-18 x 9/16) (3)	N.L.
22.	MOTOR, Heater & Defroster and Air Conditioning	8.855
23.	SCREW, Motor & Case to Fire Wall (1/4-14 x 1 1/2) (5)	N.L.
24.	INLET, Evaporator Air	9.789
25.	VALVE, Suction Throttling	9.198
26.	CASE, Evaporator	9.211
27.	NUT, Evaporator Case to Heater Case (1/4-20) (3)	N.L.
28.	NUT, Heater to Fire Wall	N.L.
29.	TANK, Vacuum	9.281
30.	CASE, Heater	9.786
31.	CAM & SUPPORT, Heater	9.786
32.	SHAFT & LEVER, (Slave Valve)	9.786
33.	LINK, Slave Valve	9.786
34.	LINK, Diverter	9.786
35.	RIVET, Clip Heater Case (2)	N.L.
36.	CLIP, Heater Case to Retain Duct	9.786
37.	SHAFT & LEVER, Diverter	9.786
38.	HARNESS, Vacuum Hose	9.798
39.	DIAPHRAGM, Defroster Door	9.779
40.	DIAPHRAGM, Mode Doors (Upper & Lower) (2)	9.281
41.	OUTLET, Heater Center	9.789
42.	SCREW, Distr. Duct to A/C Heater Case	8.977
43.	WIRE, Control (Temperature)	9.798
44.	SCREW, Control Wire to Cam & Support (10-6 x 1/2 x 2)	N.L.
45.	WASHER, Control Wires (2)	9.787
46.	CASE, Heater	8.854
47.	DIAPHRAGM, Purge Door	8.850
48.	BRACKET, Defroster Cable Mounting	9.786
49.	HOUSING, Instrument Panel	9.743
50.	OUTLET, Instrument Panel Housing (Rt.)	9.262
51.	OUTLET, Instrument Panel Housing (Lt.)	9.262
52.	SEAL, Air Outlet	9.779
53.	SCREW, Outlet To Housing (8-18 x 5/8) (AR.)	N.L.
54.	SCREW, Instrument Panel Housing to Cover (8-18 x 5/8) (4)	N.L.
55.	NUT, Instrument Panel Cover to Lower Panel	N.L.
56.	COVER, Instrument Panel	14.655
57.	CLIP, Instrument Panel Cover (Rt.)	14.655
58.	SCREW, Clip to Instrument Panel Cover (8-18 x 9/16) (2)	N.L.
59.	CLIP, Instrument Panel Cover (Center) (2)	14.655
60.	CLIP, Instrument Panel Cover (Lt.)	14.655
61.	SCREW, Instrument Panel Cover to Housing (8-18 x 5/8) (2)	N.L.
62.	MOLDING, Instrument Panel Cover	10.252
63.	NUT, Molding to Instrument Panel (10-24) (3)	N.L.
64.	OUTLET, Instrument Panel Cover Outer (2)	9.789
65.	FILLER, Steering Column Hole Cover	6.518
66.	SCREW, Filler to Lower Instrument Panel (8-18 x 5/8) (2)	N.L.
67.	SCREW, Filler to Lower Instrument Panel (8-18 x .88) (4)	N.L.
68.	GRILLE, Outside Air Lower Left	9.789
69.	SCREW, Grille to Plenum Duct (8-18 x 1/2)	N.L.
70.	SEAL, Air Outlet Center	9.779
71.	DUCT, Air Outlet Center	9.262
72.	NUT, Duct to Instrument Panel (10-24) (3)	N.L.
73.	STRAP, Radio To Upper Instrument Panel	N.L.
74.	SUPPORT, Radio to Upper Instrument Panel	9.667
75.	SCREW, Support to Upper Instrument Panel (8-18 x 5/8) (4)	N.L.
76.	CLIP, Transmission Shift Indicator	4.022
77.	CABLE, Transmission Shift Indicator	N.S.S.
78.	SCREW, Clip to Steering Column (8-18 x 3/8)	N.L.
79.	DUCT, Ventilation Upper Center	9.781
80.	SCREW, Duct Ventilator to Outlet Center (10-16 x 3/4)	N.L.
81.	NUT, Toggle, Lever to Duct (3)	9.786
82.	LEVER, Upper Air Vent	9.790
83.	SCREW, Lever Asm. to Duct (8-18 x 5/8) (3)	N.L.
84.	SCREW, Control to Lever	8.977
85.	CONTROL, Center Air Vent	9.787
86.	SCREW, Control to Lower Panel, (2)	8.977
87.	SEAL, Duct Outlet (Rt.)	9.779
88.	DUCT, Outlet (Rt.)	9.789
89.	CLOCK INSTRUMENT PANEL	9.772
90.	COVER, Clock Opening	9.772
91.	SCREW, Clock to Instrument Panel (8-18 x 5/8) (2)	N. L.
92.	HOUSING, Instrument Panel	9.743
93.	SCREW, Duct to Housing (8-18 x 5/8) (3)	N.L.
94.	SEELITE, Central Light Source	2.580
95.	SUPPORT, Heater Control	9.798
96.	SWITCH, Headlamp	2.485
97.	SCREW, Seelite to Support (8-18 x 5/8)	N.L.
98.	NUT, Light Switch Retainer	2.485
99.	CLIP, Control to Instrument Panel (2" long - 2 Mtg. Holes)	8.852
100.	NUT, Housing to Instrument Panel Lower (4)	N.L.
101.	SWITCH & LENS, Windshield Wiper	10.163
102.	SWITCH, Blower Heater Control	8.852
102.	SWITCH, Blower Air Conditioning Control	9.275
103.	CONTROL, Heater	8.849
103.	CONTROL, Air Conditioning	9.273
104.	SCREW, Control to Housing (8-18 x 5/8) (4)	N.L.
105.	CLIP, Accessory Plate to Instrument Panel Housing (4)	9.740
106.	PLATE, Instrument Panel Trim (Lt.)	10.252
107.	PLATE, Instrument Panel Trim (Rt.)	10.252
108.	COVER, Instrument Panel Radio Opening	10.256
109.	CLIP, Accessory Plate to Instrument Panel Housing (7)	9.740
110.	BODY, Instrument Panel Compartment	10.260
111.	STRIKER, Instrument Panel Compartment Door	10.268
112.	BUMPER, Instrument Panel To Compartment Door (2)	9.766
113.	SCREW, Body Instrument Panel Compartment to Panel Lower (8-18 x .62) (5)	N.L.
114.	SCREW, Striker to Body (8-18 x 1/2) (2)	N.L.
115.	SCREW, Instrument Panel Housing to Frame (8-18 x 5/8) (6)	N.L.

(Also Refer to Following Illustration For Related Heating and Air Conditioning Duct)

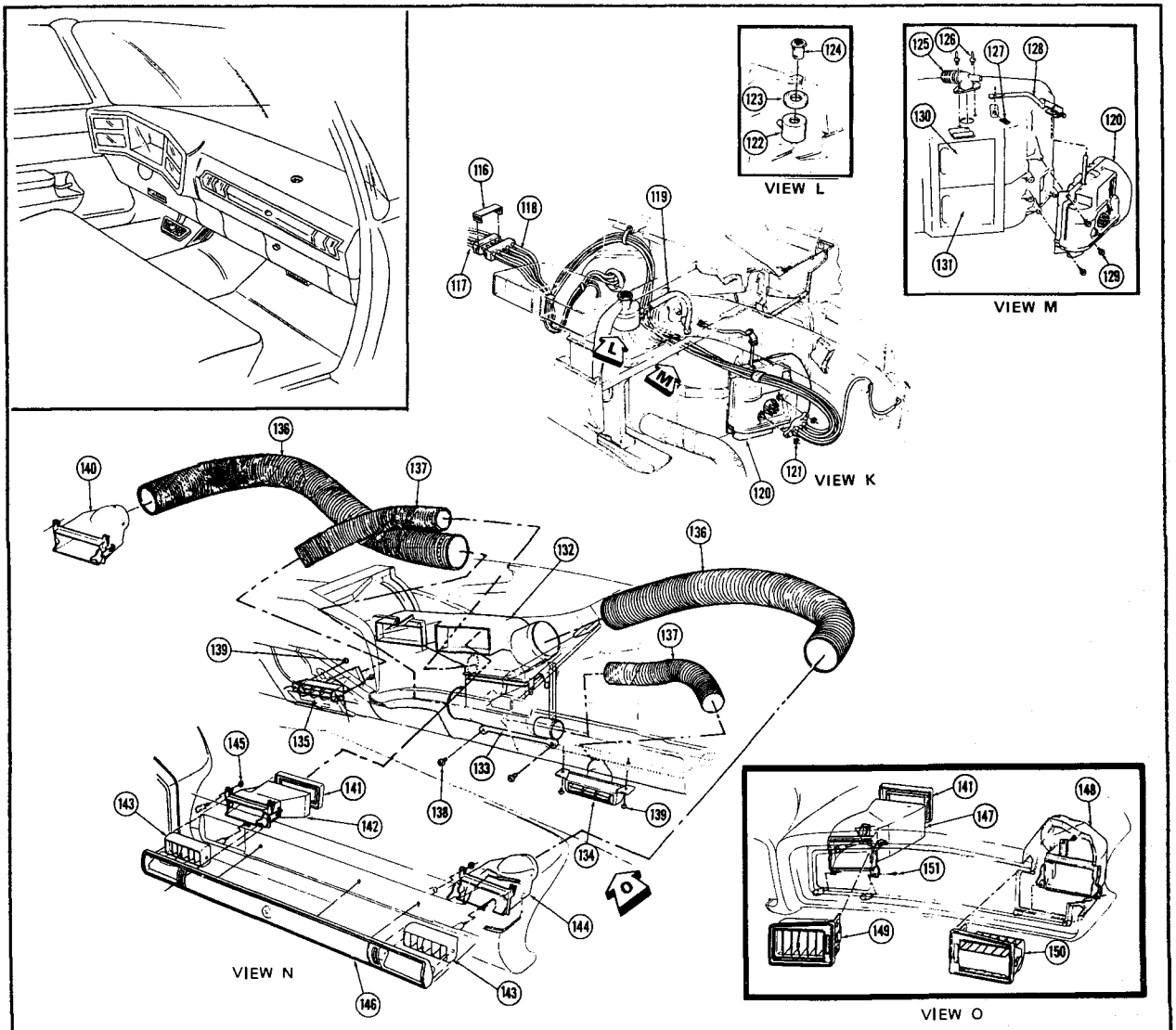

116.	CLIP, Instrument Panel Control Harness to A.C. Heater Harness	2.559
117.	HARNESS, Vacuum Instrument Panel Control Unit	9.798
118.	HARNESS, Vacuum Programmer	9.798
119.	HOSE, Vacuum (3/32 x 16.5)	8.962
120.	PROGRAMMER, Automatic Air Conditioning	9.275
121.	WASHER, Spec. Spring Grip Control (2)	9.787
122.	SENSOR, In Car Auto. Air Conditioning Control	9.276
123.	SPACER, In Car Sensor	9.275
124.	GRILLE, Auto. Temperature Control	9.275
125.	ASPIRATOR & SHIELD, Air Conditioning Control	9.275
126.	RIVET, Aspirator & Shield to Case	N.L.
127.	CLIP, Program Link to Heater Case	9.786
128.	LINKAGE, Temperature Door Connecting Program	9.276
129.	SCREW, Program to Heater (10/16 x 3/4) (3)	N.L.
130.	VALVE & SEAL, Diverter (Upper)	9.786
131.	VALVE & SEAL, Diverter (Lower)	9.786
132.	DUCT, Air Conditioning Distributor (Upper)	9.260
133.	DUCT, Air Conditioning Distributor (Lower)	9.260
134.	OUTLET, Air Conditioning Inter. (Below Glove Box) (Hsg. & Vane) (Rt.)	9.262
135.	OUTLET, Air Conditioning Inter. (Hsg. & Vane) (Lt.)	9.262
136.	HOSE, Air (3 1/4" I.D.)	9.786
137.	HOSE, Air (1 1/2" I.D.)	9.786
138.	SCREW, Distributor Duct to Heater Case	8.977
139.	SCREW, Outlet to Lower Instrument Panel (8-18 x 9 /161 (2)	N.L.
140.	OUTLET, Instrument Panel Housing, Air Conditioning (Lt.)	9.262
141.	SEAL, Air Outlet	9.779
142.	DUCT, Instrument Panel Cover Air Conditioning (incl. Valve) (Lt.)	9.262
143.	OUTLET, Instrument Panel Cover Outer (Rt. Side of Instr. Pnl.) (2)	9.789
144.	DUCT, Instrument Panel Cover Air Conditioning (Incl. Valve)	9.262
145.	NUT, Duct to Instrument Panel Cover Molding (10-24) (6)	N.L.
146.	MOLDING, Instrument Panel Cove	10.252
147.	DUCT, Instrument Panel Cover (Center) (9000)	9.262
148.	DUCT, Instrument Panel Cover (Rt.) (9000)	9.262
149.	OUTLET, Instrument Panel Cover (Center) (9000)	9.262
150.	OUTLET, Instrument Panel Cover (Rt.) (9000)	9.262
151.	SCREW, Duct to Instrument Panel Cover Molding (9000) (8-18 x 9/16)	N.L.

(Also Refer to Previous Illustration For Related Instrument Panel Assembly.)

HEATING AND AIR CONDITIONING DUCT
1971-72-B-C-E

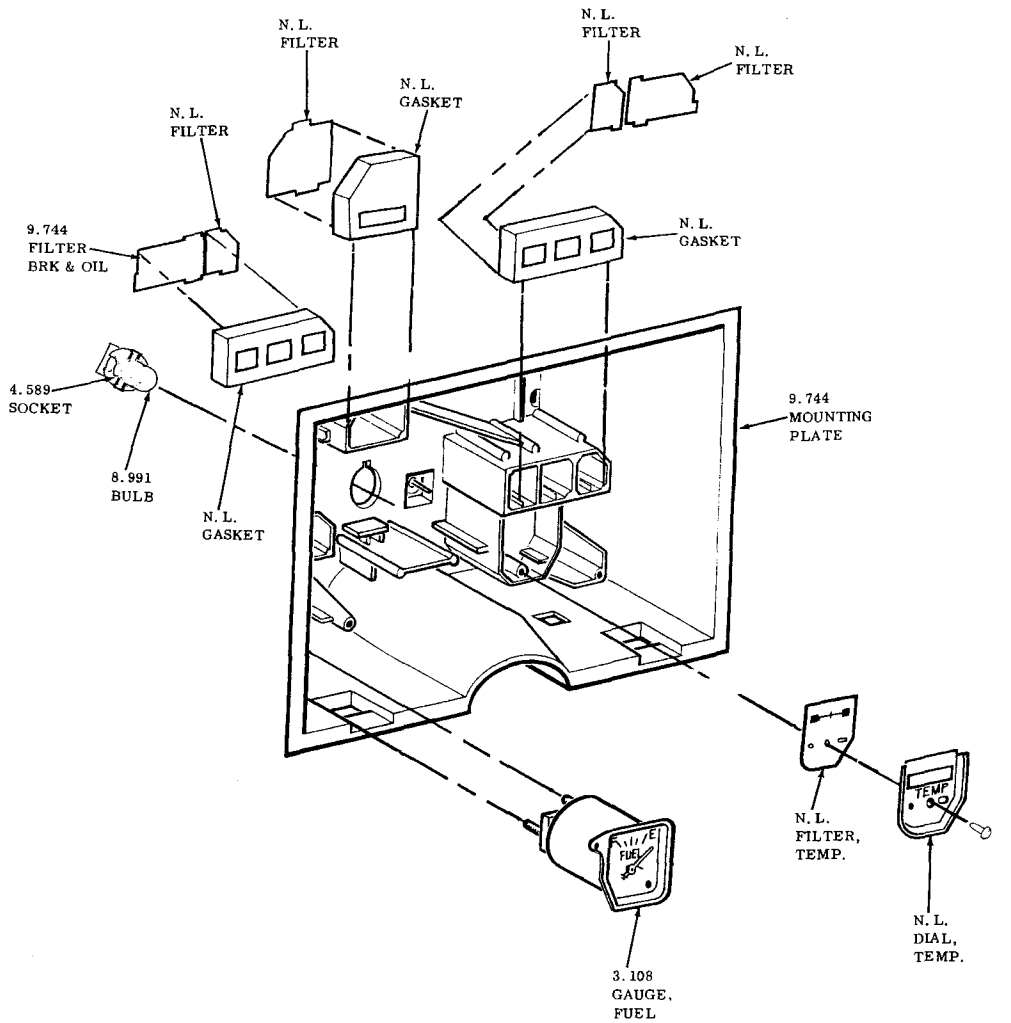

SPEEDOMETER CLUSTER

1971-1972 S0-60-80-9000

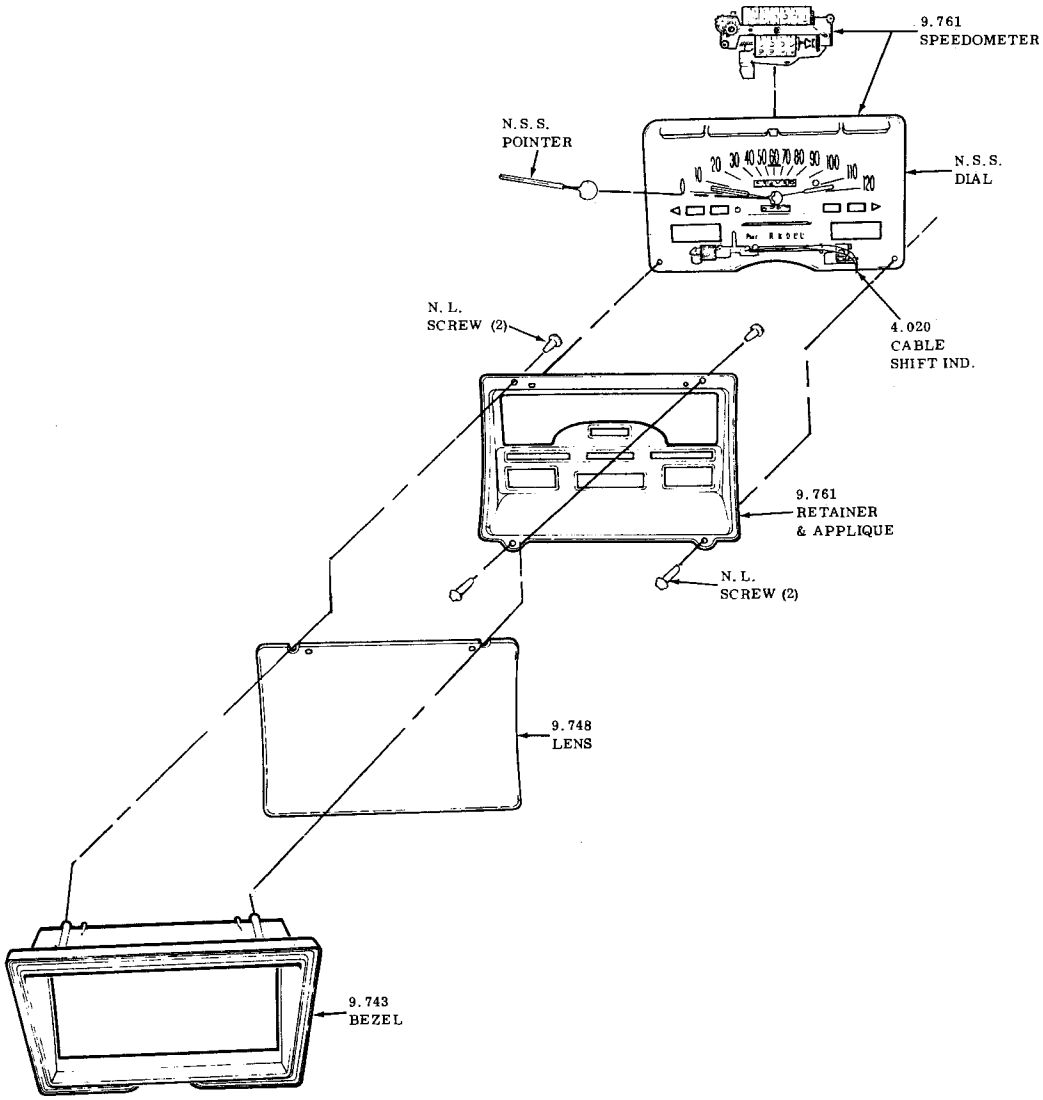

SPEEDOMETER CLUSTER

1971- 1972 50-60-80-9000

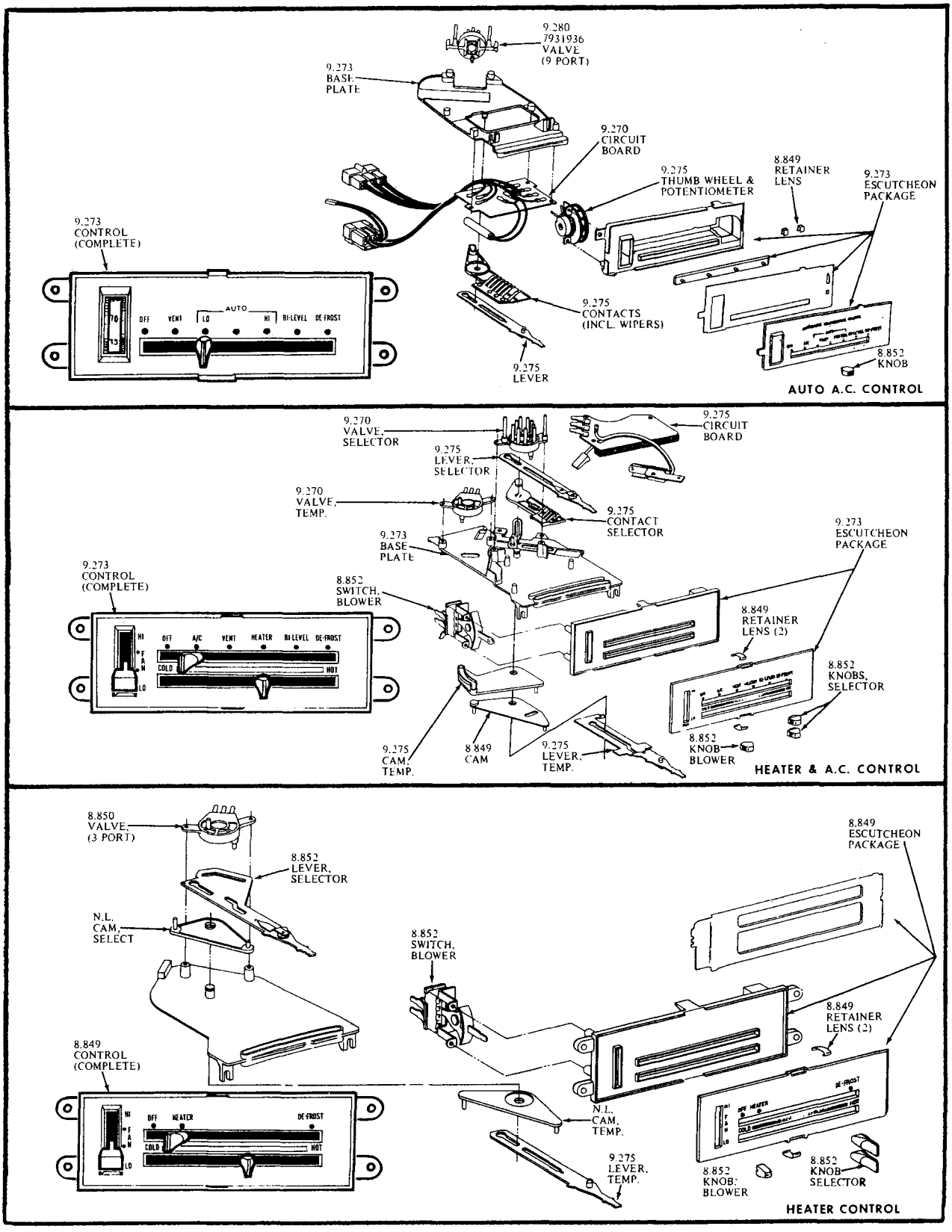

HEATER & AIR CONDITIONING CONTROLS

1971 - 1972 50-60-80-9000

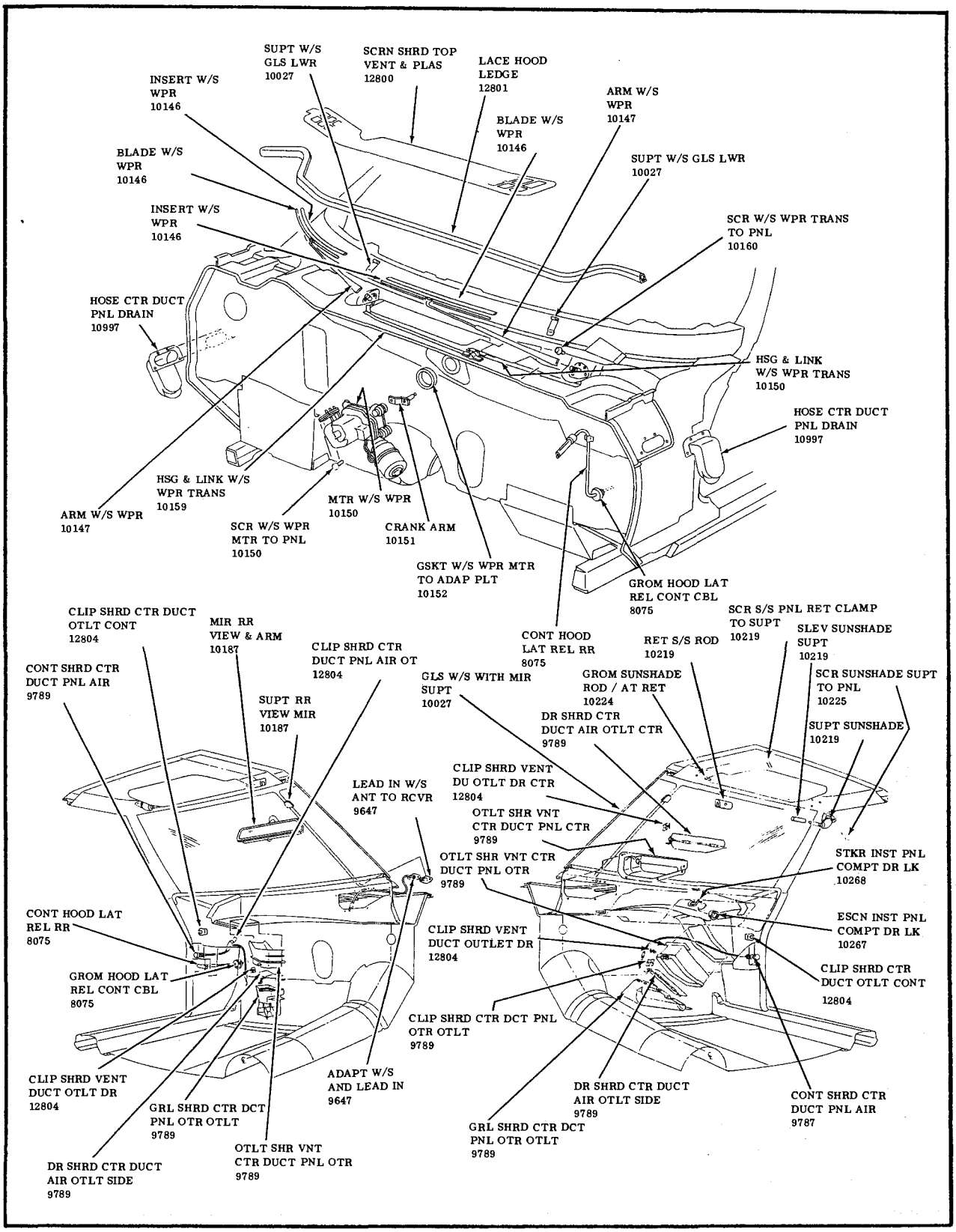

BODY FRONT END HARDWARE

1972-50-60-80-8000

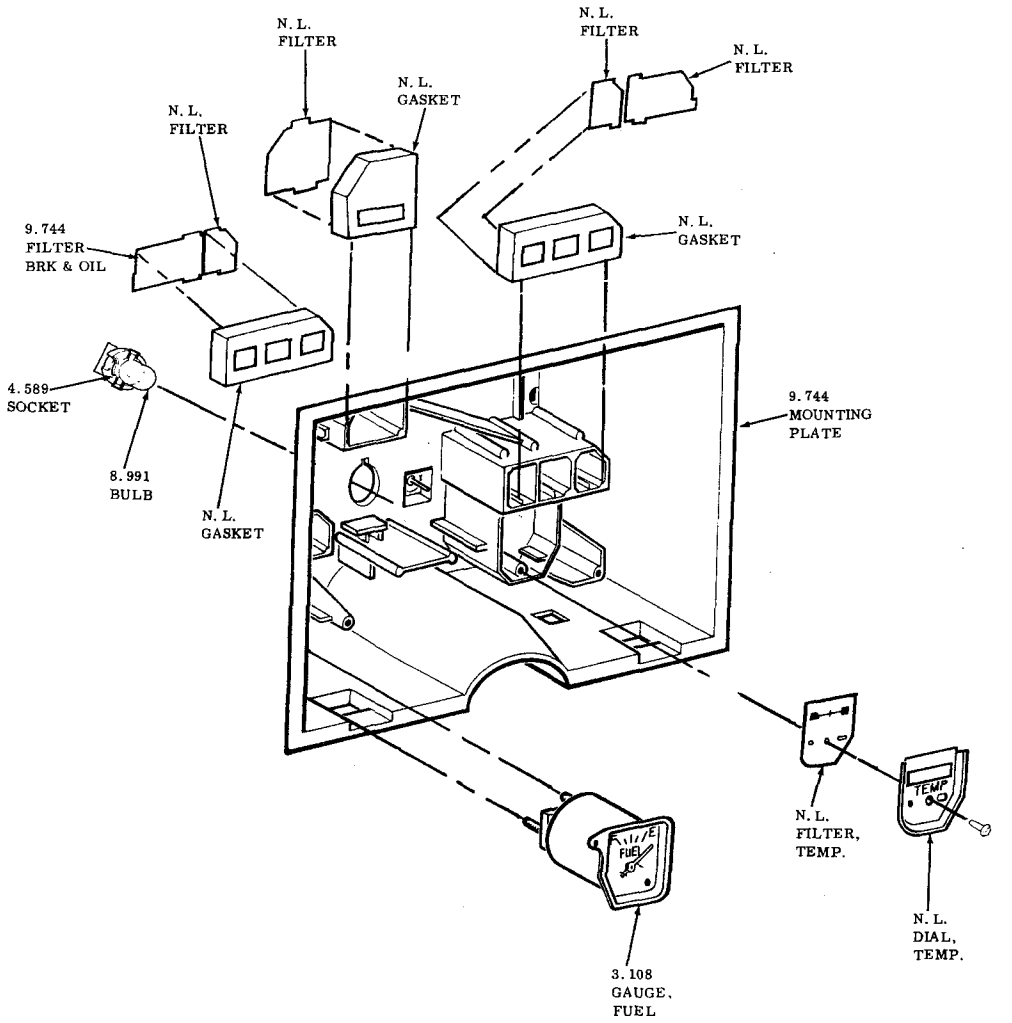

SPEEDOMETER CLUSTER

1971-1972 50-60-80-9000

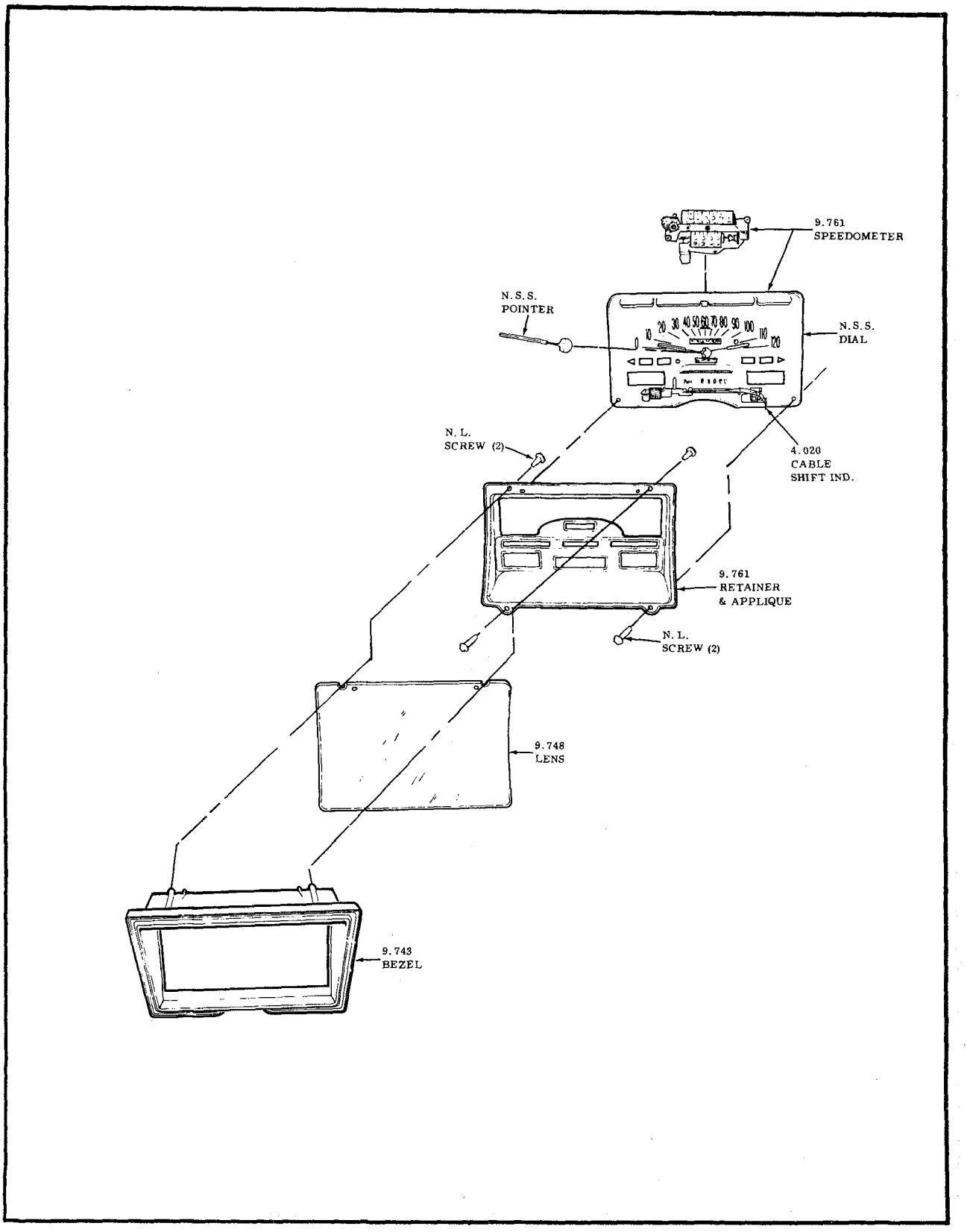

SPEEDOMETER CLUSTER

1971-1972 50-60-80-9000

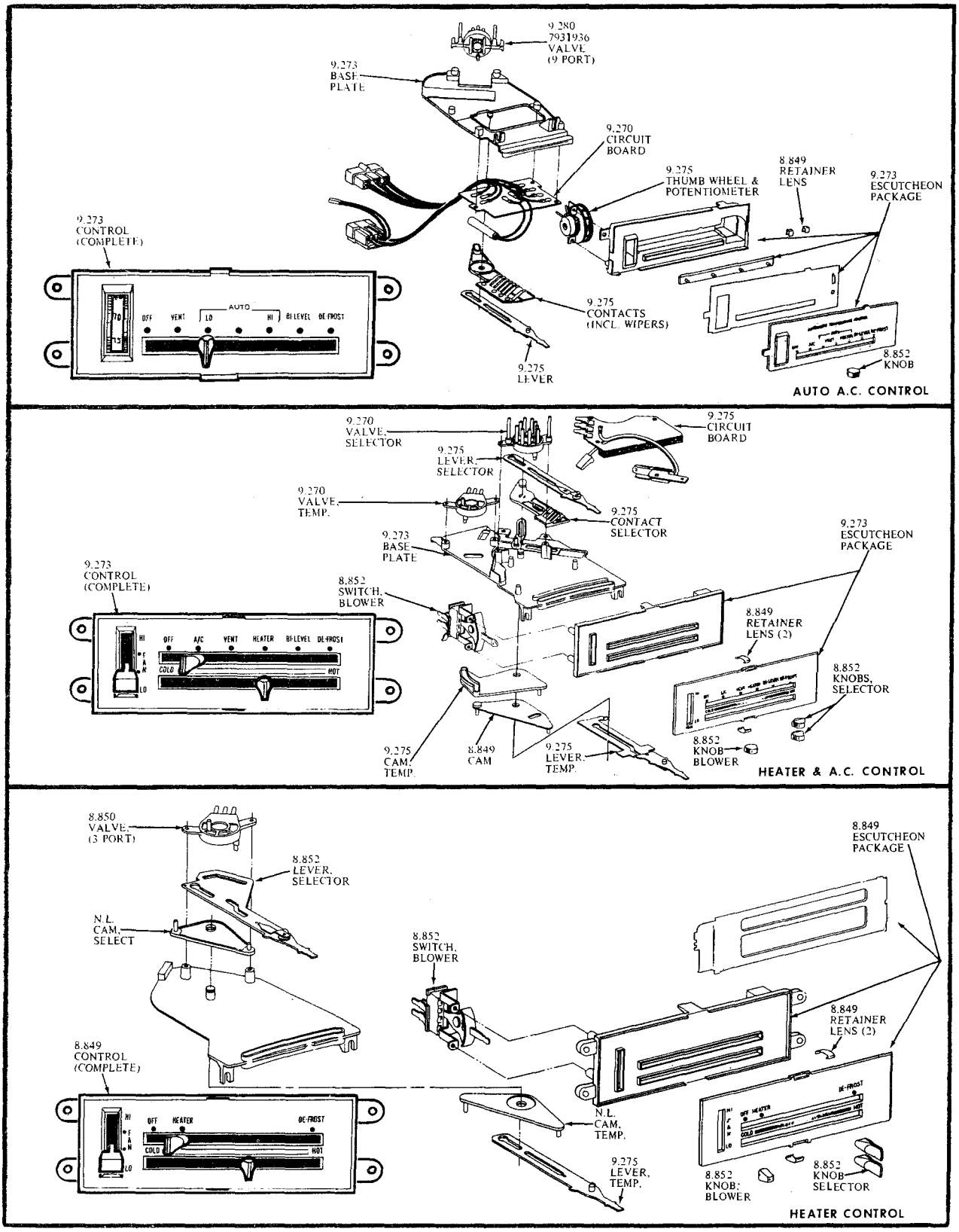

HEATER & AIR CONDITIONING CONTROLS

1971 - 1972 50-60-80-9000

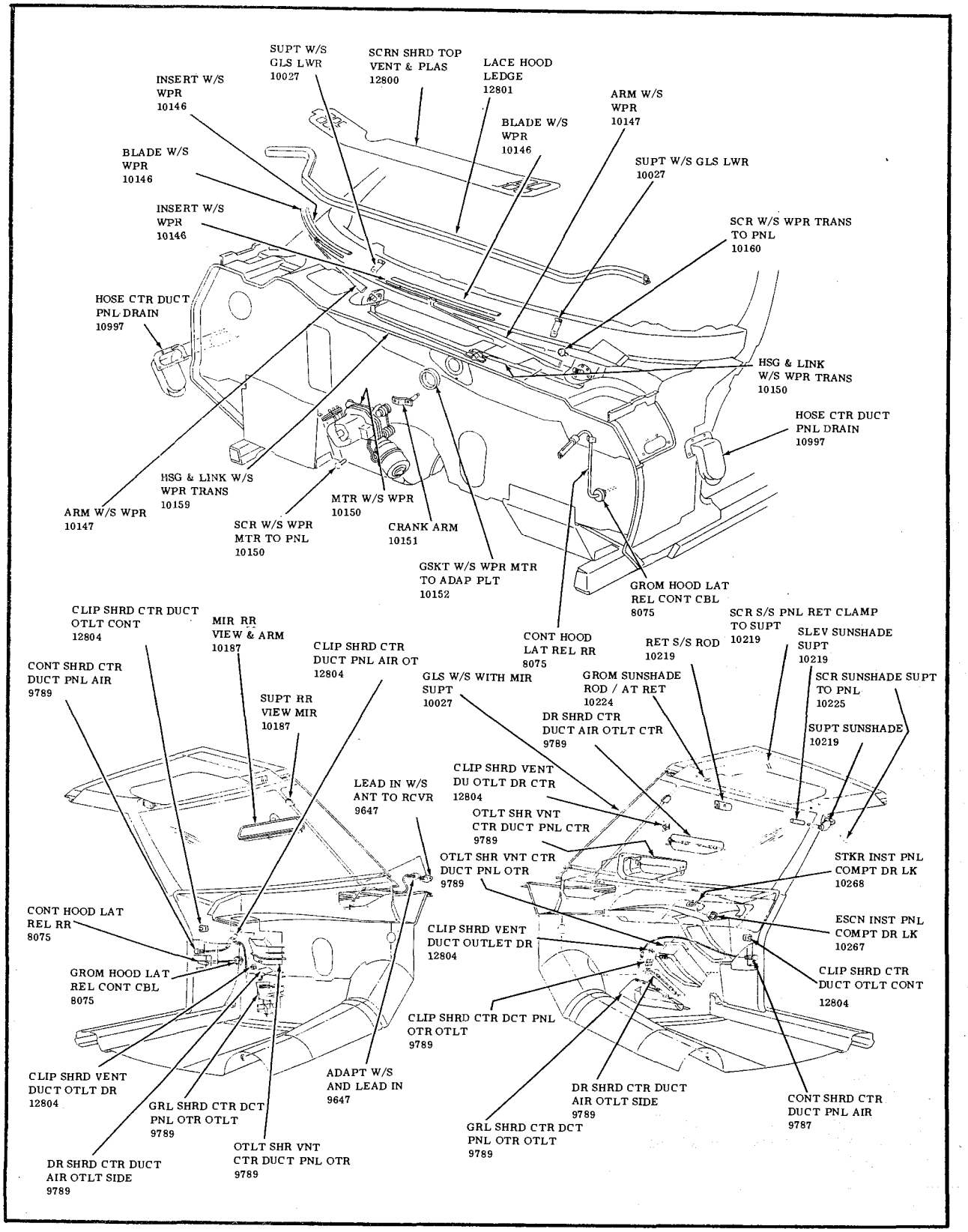

BODY FRONT END HARDWARE

1972-50-60-80-8000