1965 OLDSMOBILE

F-85 / CUTLASS / 4-4-2

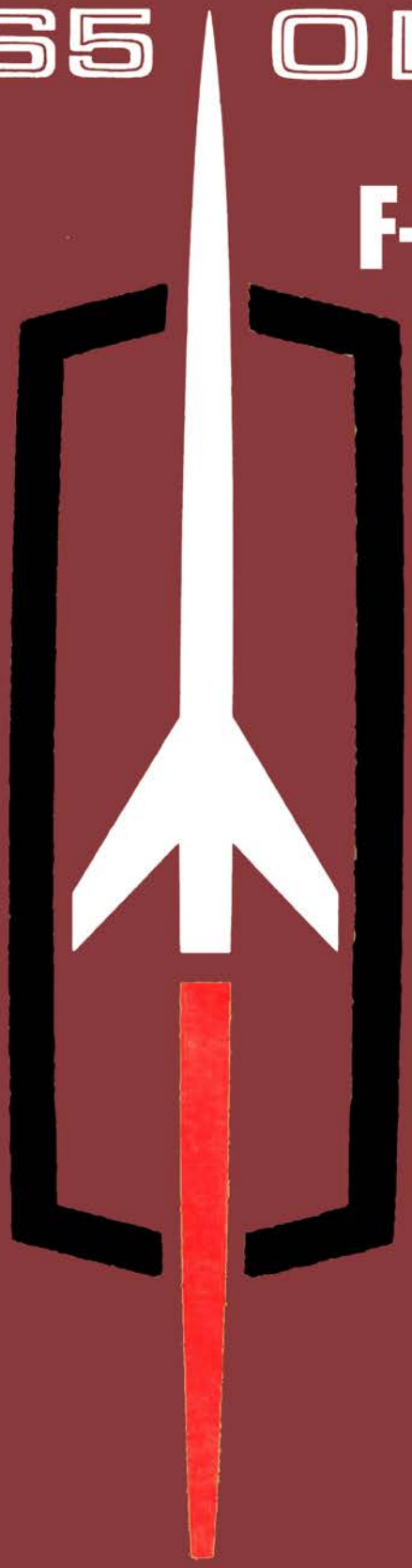

ASSEMBLY MANUAL

GENERAL

DRAWING NO.	DRAWING NAME	PAGE NO.
-----	I.B.M. ACCESSORY CODES	GEN. - 1.2
387349	PROTECT-O-PLATE	GEN. - 2.1
387348	LABEL LOCATIONS	GEN. - 3.1
388258	VEHICLE NUMBER PLATE INSTALLATION	GEN. - 4.1
387713	VEHICLE NUMBER PLATE CHART	GEN. - 5.1

IBM ACCESSORY CODES

1969
Oldsmobile

For Plant Use

36	1		Sales Group No. 1
	2		Sales Group No. 2
37	2	L74	Cutlass Engine (F85 & J88)
	2	L74	H.C. 4 Bbl. Engine (D88)
	3	L65	Regular Fuel Engine
	4	L75	Starfire Engine
	5	L76	Apprehender Engine (Single Exhaust)
	6	L77	Apprehender Engine (Dual Exhaust)
38	1	M11	3-Speed Column Shift
	2	M12	3-Speed Floor Shift (F85)
	3	M20	4-Speed Syn. Floor Shift
	4	M33	Jetaway (F85 & J88)
	4	M40	Hydra-Matic (FSC)
	5	M32	Jetaway for "4-4-2"
	6	M13	3-Speed Column Shift (For 4-4-2)
	7	M21	4-Speed Floor Shift
	8	M34	H.D. Jetaway (F85 & J88)
	8	M41	H.D. Hydra-Matic (FSC)
39	1	N40	Power Steering
	2	J50	Power Brakes
	4	T87	Cornering Lamps (FSC)
	3		N40 and J50
	5		N40 and T87
	6		J50 and T87
	7		N40, J50, and T87
40	1	N33	Tilt Steering Column
	2	N31	Custom Deluxe Steering Wheel
	4	N10	Dual Exhaust System (F85 & J88)
	3		N33 and N31
	5		N33 and N10
	6		N31 and N10
	7		N33, N31, and N10
41	1	K30	Cruise Control (FSC)
	2	U15	Safety Sentinel (FSC)
	4	T80	Guide Lamp Control (FSC)
	3		K30 and U15
	5		K30 and T80
	6		U15 and T80
	7		K30, U15, and T80
42	1	C14	Two-Speed W/S Washer (F85)
	1	C16	W/S Washer (D88 & J88)
	2	D31	Tilt-Type Mirror
	3		C14 or C16 and D31
43	1	N30	Deluxe Steering Wheel
	2	U35	Electric Clock
	3		N30 and U35
44	1	Y60	Accessory Package
	2	A91	Vacuum Trunk Lid Latch
	3		Y60 and A91
45	1	T86	Back-Up Lamps
	2	U29	Courtesy Lamps
	4	U40	Parking Brake Lamps (F85)
	3		T86 and U29
	5		T86 and U40
	6		U29 and U40
	7		T86, U29, and U40
46	1	U63	Deluxe Radio
	2	U65	Super Deluxe Radio (FSC)
	4	U69	AM-FM Radio (FSC)
47	1	U75	Electric Antenna
	2	U80	Rear Seat Speaker
	4	U84	Rev. Rear Speaker (FSC)
	3		U75 and U80
	5		U75 and U84
48	1	P26	14" Whitewall Tires
	2	P29	14" Oversize Tires
	3	P30	14" Oversize W/W Tires
	4	P28	15" Blackwall-Rayon Tires(FSC)
	4	P28	15" Blackwall Tires (4 Ply Nylon, F-85)
	5	P27	15" Whitewall Tires (4-Ply Nylon, F-85)
	6	T14	8PR. Blackwall Tires (F85 & J88)
	6	P88	8 PR Blackwall Tires (FSC)
	7	T15	8 PR Whitewall Tires (F85 & J88)
	7	Q14	8 PR Whitewall Tires (FSC)
49	1	P01	Wheel Discs
	2	P02	Deluxe Wheel Discs
	3	N93	Custom Wheel Discs (FSC)
	5	N95	Simulated Wire Wheel Covers
	6	P06	Wheel Trim Rings
50	1	C48	Delete Heater & Defroster
	2	C50	Rear Window Defroster (FSC)
	4	K20	Crankcase Ventilation (Calif. Orders Only)
	3		C48 and C50
	5		C48 and K20
	6		C50 and K20
	7		C48, C50, and K20
51	1	B32	Front Floor Mats
	2	B33	Rear Floor Mats
	4	B36	Luggage Comp. Mat (6657, 6667, 6669)
	4	Y77	Wheel Cover & Luggage Mat (FSC)
	3		B32 and B33
	5		B32 and B36 or Y77
	6		B33 and B36 or Y77
	7		B32, B33, and B36 or Y77
52	1	D32	Outside R.V. Mirror
	2	D33	Remote Control O.S.Mirror
	4	B93	Door Edge Guard Mouldings
	5		D32 and B93
	6		D33 and B93
53	1	G80	Locking Type Differential
54	1	G91	Performance Axle
	2	G92	Performance Axle
	3	G93	Performance Axle
	4	G94	Performance Axle
	5	G95	Plains Axle
55	1	G66	Shock Absorbers
	2	U89	Trailer Wiring Harness
	4	M01	H.D. Clutch
	3		G66 and U89
	5		G66 and M01
	6		U89 and M01
	7		G66, U89, and M01
56	1	F35	H.D. Frame
	2	G51	H.D. Springs
	4	P19	Spare Wheel Lock
	3		F35 and G51
	5		F35 and P19
	6		G51 and P19
	7		F35, G51, and P19
57	1		4-4-2 Performance Option
58	1	A01	Tinted Glass
	2	A02	Tinted Windshield
59	1	B70	Instrument Panel Pad
	2	B80	Chrome Door-Window Frames
	4	B84	Ext. Side Mouldings
	3		B70 and B80
	5		B70 and B84
	6		B80 and B84
	7		B70, B80, and B84
60	1	B80	Roof Drip Mouldings
	2	B85	Ext. Belt Mouldings
	4	Y68	Exterior Mouldings (F85)
	3		B80 and B85
	5		B80 and Y68
	6		B85 and Y68
	7		B80, B85, and Y68
61	1	B50	Foam Seat Cushion, Ft.
	2	B52	Foam Seat Cushion, Rear
	4	Y67	Interior Option
	3		B50 and B52
	5		B50 and Y67 (F85 Only)
	6		B52 and Y67
	7		B50, B52, and Y67 (F85 Only)
62	1	B30	Wool Carpets (F85)
	2	D55	Front Comp. Console (F85)
	4	A52	Bench Seat Option (F85)
	3		B30 and D55
	5		B30 and A52
63	1	C90	Air Conditioning
	4	Y76	H.D. Engine Cooling
64	1	A41	Elec. 4-Way Seat (Bench)
	2	A42	Elec. 6-Way Seat (Bench, FSC)
	4	A40	Elec. 2-Way Seat (Bucket, FSC)
	5	A46	Elec. 4-Way Seat (Bucket)
65	1	A31	Elec. 4-Window Lifts
	2	A32	Electric C.V. (FSC)
	4	A93	Side Door Lock, Ft. or Rr. (FSC)
	3		A31 and A32
	5		A31 and A93
	6		A32 and A93
	7		A31, A32, and A93
66	1	A49	Deluxe Seat Belts, Front
	2	A39	Deluxe Seat Belts, Front and Rear
	4	A64	Standard Seat Belts, Rear
	9	A62	Delete Front Seat Belts
67	1	A66	Divided Second Seat
	2	A33	Electric Rear Window
	3		A66 and A33
68	1	B39	Carpeted Load Floor
	2	D26	Sun Shade (Vista-Cruiser)
	3		B39 and D26
69	1	V55	Luggage Carrier
	2	V56	Storage Comp. Locker
70	1	B01	Police Apprehender (City)
	2	B07	Police Apprehender (Highway Patrol)
71	1	N38	Manual Steering, H.D.
	2	J56	H.D. Brakes
	3		N38 and J56
72	1	A74	Seat Springs, H.D., Front and Rear
	1	A75	Seat Spring, H.D., Front, (SW)
	2	B34	Front Floor Covering, H.D.
	4	B35	Rear Floor Covering, H.D.
	3		A74 or A75 and B34
	5		A74 or A75 and B35
	6		B34 and B35
	7		A74 or A75, B34, and B35
73	1	K32	Manual Throttle
	2	U90	Wiring Harness and Reinforcement
	4	U91	Flasher Wiring Harness
	3		K32 and U90
	5		K32 and U91
74	1	A98	Vac. Operated Rear Door Locks (FSC Sedan Only)
	2	Y76	Reinforced Wheel and Mt. (FSC)
	4	T60	Battery, Heavy Duty (70 AMP) (F85 Only)
	3		A98 and Y75
75	1	Y64	Factory Retail Service
	2	Y62	Special Paint - Charge
	4	Y63	Special Paint - No Charge
	5	Y65	Dealer Retail Service
	12		Expedite
	3		Y64 and Y62
	5		Y64 and Y63
76	A		G.M. Employe or Allied Division
	F		Fleet Order
	S		Sold Order
	T		Terminated Dealer
	X		Export
77	1	Y61	Export Preparation
78	1	T74	R.H. Headlamps
	2	V60	Tire Pump
	4	P32	Delete Spare Tire
	3		T74 and V60
	5		T74 and P32
	6		V60 and P32
	7		T74, V60, and P32
79			Firestone 500 Nylon Tires
	2	P16	Standard Whitewall
	4	P18	Oversize Whitewall
80	1	U18	Kilo Speedometer
	2	L90	Low Compression Engine
	4	F74	H.D. Chassis
	3		U18 and L90
	5		U18 and F74
	6		L90 and F74
	7		U18, L90, and F74

Lansing Production Only

PLEASE NOTE CHANGES IN COLUMNS 48 AND 74

Revised 11-10-64

GEN 1.2

IBM ACCESSORY CODES

1965
Oldsmobile

For Plant Use

36	1		Sales Group No. 1
	2		Sales Group No. 2
37	2	L74	Cutlass Engine (F85 & J88)
	2	L74	H.C. 4 Bbl. Engine (D88)
	3	L65	Regular Fuel Engine
	4	L75	Starfire Engine
	5	L76	Apprehender Engine (Single Exhaust)
	6	L77	Apprehender Engine (Dual Exhaust)
38	1	M11	3-Speed Column Shift
	2	M12	3-Speed Floor Shift (F85)
	3	M20	4-Speed Syn. Floor Shift
	4	M33	Jetaway (F85 & J88)
	4	M40	Hydra-Matic (F8C)
	5	M32	Jetaway for "4-4-2"
	6	M13	3-Speed Column Shift (For 4-4-2)
	7	M21	4-Speed Floor Shift
	8	M34	H.D. Jetaway (F85 & J88)
	8	M41	H.D. Hydra-Matic (F8C)
39	1	N40	Power Steering
	2	J50	Power Brakes
	4	T87	Cornering Lamps (F8C)
	3		N40 and J50
	5		N40 and T87
	6		J50 and T87
	7		N40, J50, and T87
40	1	N33	Tilt Steering Column
	2	N31	Custom Deluxe Steering Wheel
	4	N10	Dual Exhaust System (F85 & J88)
	3		N33 and N31
	5		N33 and N10
	6		N31 and N10
	7		N33, N31, and N10
41	1	K30	Cruise Control (F8C)
	2	U15	Safety Sentinel (F8C)
	4	T80	Guide Lamp Control (F8C)
	3		K30 and U15
	5		K30 and T80
	6		U15 and T80
	7		K30, U15, and T80
42	1	C14	Two-Speed W S Washer (F85)
	1	C16	W S Washer (D88 & J88)
	2	D31	Tilt-Type Mirror
	3		C14 or C16 and D31
43	1	N30	Deluxe Steering Wheel
	2	U35	Electric Clock
	3		N30 and U35
44	1	Y60	Accessory Package
	2	A91	Vacuum Trunk Lid Latch
	3		Y60 and A91
45	1	T86	Back-Up Lamps
	2	U29	Courtesy Lamps
	4	U40	Parking Brake Lamps (F85)
	3		T86 and U29
	5		T86 and U40
	6		U29 and U40
	7		T86, U29, and U40
46	1	U63	Deluxe Radio
	2	U65	Super Deluxe Radio (F8C)
	4	U69	AM-FM Radio (F8C)
47	1	U75	Electric Antenna
	2	U80	Rear Seat Speaker
	4	U84	Rev. Rear Speaker (F8C)
	3		U75 and U80
	5		U75 and U84
48	1	P26	14" Whitewall Tires
	2	P29	14" Oversize Tires
	3	P30	14" Oversize W.W Tires
	4	P28	15" Blackwall Tires (For Police Only, F8C)
	5	P27	15" Whitewall Tires (F85)
	6	T14	8 PR Blackwall Tires (F85 & J88)
	6	P68	8 PR Blackwall Tires (F8C)
	7	T15	8 PR Whitewall Tires (F85 & J88)
	7	Q14	8 PR Whitewall Tires (F8C)
49	1	P01	Wheel Discs
	2	P02	Deluxe Wheel Discs
	3	N93	Custom Wheel Discs (F8C)
	5	N95	Simulated Wire Wheel Covers
	6	P06	Wheel Trim Rings
50	1	C48	Delete Heater & Defroster
	2	C50	Rear Window Defroster (F8C)
	4	K20	Crankcase Ventilation (Calif. Orders Only)
	3		C48 and C50
	5		C48 and K20
	6		C50 and K20
	7		C48, C50, and K20
51	1	B32	Front Floor Mats
	2	B33	Rear Floor Mats
	4	B36	Luggage Comp. Mat (6657, 6667, 6669)
	4	Y77	Wheel Cover & Luggage Mat (F8C)
	3		B32 and B33
	5		B32 and B36 or Y77
	6		B33 and B36 or Y77
	7		B32, B33, and B36 or Y77
52	1	D32	Outside R.V. Mirror
	2	D33	Remote Control O.S. Mirror
	4	B93	Door Edge Guard Mouldings
	5		D32 and B93
	6		D33 and B93
53	1	G80	Locking Type Differential
54	1	G81	Performance Axle
	2	G82	Performance Axle
	3	G83	Performance Axle
	4	G84	Performance Axle
	5	G85	Plains Axle
55	1	G66	Shock Absorbers
	2	U89	Trailer Wiring Harness
	4	M01	H.D. Clutch
	3		G66 and U89
	5		G66 and M01
	6		U89 and M01
	7		G66, U89, and M01
56	1	F35	H.D. Frame
	2	G51	H.D. Springs
	4	P19	Spare Wheel Lock
	3		F35 and G51
	5		F35 and P19
	6		G51 and P19
	7		F35, G51, and P19
57	1		4-4-2 Performance Option
58	1	A01	Tinted Glass
	2	A02	Tinted Windshield
59	1	B70	Instrument Panel Pad
	2	B90	Chrome Door-Window Frames
	4	B84	Ext. Side Mouldings
	3		B70 and B90
	5		B70 and B84
	6		B90 and B84
	7		B70, B90, and B84
60	1	B80	Roof Drip Mouldings
	2	B85	Ext. Belt Mouldings
	4	Y68	Exterior Mouldings (F85)
	3		B80 and B85
	5		B80 and Y68
	6		B85 and Y68
	7		B80, B85, and Y68
61	1	B50	Foam Seat Cushion, Ft.
	2	B52	Foam Seat Cushion, Rear
	4	Y67	Interior Option
	3		B50 and B52
	5		B50 and Y67 (F85 Only)
	6		B52 and Y67
	7		B50, B52, and Y67 (F85 Only)
62	1	B30	Wool Carpets (F85)
	2	D55	Front Comp. Console (F85)
	4	A52	Bench Seat Option (F85)
	3		B30 and D55
	5		B30 and A52
63	1	C60	Air Conditioning
	4	Y76	H.D. Engine Cooling
64	1	A41	Elec. 4-Way Seat (Bench)
	2	A42	Elec. 6-Way Seat (Bench, F8C)
	4	A40	Elec. 2-Way Seat (Bucket, F8C)
	5	A46	Elec. 4-Way Seat (Bucket)
65	1	A31	Elec. 4-Window Lifts
	2	A32	Electric C.V. (F8C)
	4	A93	Side Door Lock, Ft. or Rr. (F8C)
	3		A31 and A32
	5		A31 and A93
	6		A32 and A93
	7		A31, A32, and A93
66	1	A49	Deluxe Seat Belts, Front
	2	A39	Deluxe Seat Belts, Front and Rear
	4	A84	Standard Seat Belts, Rear
	9	A82	Delete Front Seat Belts
67	1	A86	Divided Second Seat
	2	A33	Electric Rear Window
	3		A86 and A33
68	1	B39	Carpeted Load Floor
	2	D26	Sun Shade (Vista-Cruiser)
	3		B39 and D26
69	1	V55	Luggage Carrier
	2	V56	Storage Comp. Locker
70	1	B01	Police Apprehender (City)
	2	B07	Police Apprehender (Highway Patrol)
71	1	N38	Manual Steering, H.D.
	2	J56	H.D. Brakes
	3		N38 and J56
72	1	A74	Seat Springs, H.D., Front and Rear
	1	A75	Seat Spring, H.D., Front, (SW)
	2	B34	Front Floor Covering, H.D.
	4	B35	Rear Floor Covering, H.D.
	3		A74 or A75 and B34
	5		A74 or A75 and B35
	6		B34 and B35
	7		A74 or A75, B34, and B35
73	1	K32	Manual Throttle
	2	U90	Wiring Harness and Reinforcement
	4	U91	Flasher Wiring Harness
	3		K32 and U90
	5		K32 and U91
74	1	A98	Vac. Operated Rear Door Locks (F8C Sedan Only)
	2	Y75	Reinforced Wheel and Mt. (F8C)
	3		A98 and Y75
75	1	Y64	Factory Retail Service
	2	Y62	Special Paint - Charge
	4	Y63	Special Paint - No Charge
	8	Y65	Dealer Retail Service
	12		Expedite
	3		Y64 and Y62
	5		Y64 and Y63
76	A		G.M. Employe or Allied Division
	F		Fleet Order
	S		Sold Order
	T		Terminated Dealer
	X		Export
77	1	Y61	Export Preparation
78	1	T74	R.H. Headlamps
	2	V60	Tire Pump
	4	P32	Delete Spare Tire
	3		T74 and V60
	5		T74 and P32
	6		V60 and P32
	7		T74, V60, and P32
79			Firestone 500 Nylon Tires
	2	P16	Standard Whitewall
	4	P18	Oversize Whitewall
80	1	U18	Kilo Speedometer
	2	L90	Low Compression Engine
	4	F74	H.D. Chassis
	3		U18 and L90
	5		U18 and F74
	6		L90 and F74
	7		U18, L90, and F74

Lansing Production Only

PLEASE NOTE CHANGES IN COLUMN 79

Revised 11-5-64

GEN - 1 2

1965 IBM ACCESSORY CODES

Alphabetical Reference

Acc. Letter	Column	Key Punch	Accessory
A01	58	1	Tinted Glass
A02	58	2	Tinted Windshield
A31	65	1	Electric 4-Window Lifts
A32	65	2	Electric C.V.
A33	67	2	Electric Rear Window
A39	66	2	Deluxe Seat Belts, Front and Rear
A40	64	4	Elec. 2-Way Seat (Bucket)
A41	64	1	Elec. 4-Way Seat (Bench)
A42	64	2	Elec. 6-Way Seat (Bench)
A46	64	8	Elec. 4-Way Seat (Bucket)
A49	66	1	Deluxe Seat Belts, Front
A62	66	9	Delete Front Seat Belts
A64	66	4	Standard Seat Belts, Rear
A66	67	1	Divided Second Seat
A74	72	1	Seat Springs, H.D., Front and Rear
A75	72	1	Seat Spring, H.D., Front (SW)
A91	44	2	Vacuum Trunk Lid Latch
A93	65	4	Side Door Lock, Front and Rear
A98	74	1	Vac. Operated Rear Door Locks
B01	70	1	Police Apprehender (City)
B07	70	2	Police Apprehender (Highway)
B30	62	1	Wool Carpets
B32	61	1	Front Floor Mats
B33	61	2	Rear Floor Mats
B34	72	2	Front Floor Covering, H.D.
B35	72	4	Rear Floor Covering, H.D.
B36	61	4	Luggage Comp. Mat
B39	68	1	Carpeted Load Floor
B50	61	1	Foam Seat Cushion, Front
B52	61	2	Foam Seat Cushion, Rear
B70	60	1	Instrument Panel Pad
B80	60	1	Roof Drip Mouldings
B84	60	4	Ext. Side Mouldings
B85	60	2	Ext. Belt Mouldings
B86	50	2	Chrome Door-Window Frames
B93	52	4	Door Edge Guard Mouldings
C14	42	1	Two-Speed W/S Washer
C18	42	1	W/S Washer
C48	50	1	Delete Heater & Defroster
C50	50	2	Rear Window Defroster
C60	63	1	Air Conditioning
D26	69	2	Sun Shade
D31	42	2	Tilt-Type Mirror
D32	52	1	Outside R.V. Mirror
D33	52	2	Remote Control Outside Mirror
D55	62	2	Front Comp. Console
F35	56	1	H.D. Frame
G51	54	2	H.D. Springs
G66	55	1	Shock Absorbers
G80	53	1	Locking Type Differential
G91	54	1	Performance Axle
G92	54	2	Performance Axle
G93	54	3	Performance Axle
G94	54	4	Performance Axle
G95	54	5	Plains Axle

Acc. Letter	Column	Key Punch	Accessory
J50	39	2	Power Brakes
J56	71	2	H. D. Brakes
K20	50	4	Crankcase Ventilation
K30	41	1	Cruise Control
K32	73	1	Manual Throttle
L65	37	3	Regular Fuel Engine
L74	37	2	Cutlass Engine
L74	37	2	H. C. 4Bbl. Engine
L75	37	4	Starfire Engine
L76	37	5	Apprehender Engine
L77	37	6	Apprehender Engine
M01	55	4	H.D. Clutch
M11	38	1	3-Speed Column Shift
M12	38	2	3-Speed Floor Shift
M13	38	6	3-Speed Column Shift (For 4-4-2)
M20	38	3	4-Speed Syn.-Floor Shift
M21	38	7	4-Speed Floor Shift (4-4-2 Only)
M32	38	5	Jetaway for 4-4-2
M33	38	4	Jetaway
M34	38	8	H.D. Jetaway
M40	38	4	Hydra-Matic
M41	38	8	H.D. Hydra-Matic
N10	40	4	Dual Exhuast System
N30	43	1	Deluxe Steering Wheel
N31	40	2	Custom Deluxe Steering Wheel
N33	40	1	Tilt Steering Column
N38	71	1	Manual Steering, H.D.
N40	39	1	Power Steering
N93	49	3	Custom Wheel Discs
N95	49	5	Simulated Wire Wheel Covers
P01	49	1	Wheel Discs
P02	49	2	Deluxe Wheel Discs
P06	49	6	Wheel Trim Rings
P19	56	4	Spare Wheel Lock
P26	48	1	14" Whitewall Tires
P27	48	5	15" Whitewall Tires
P28	48	4	15" Blackwall Tires
P29	48	2	14" Oversize Tires
P30	48	3	14" Oversize W/W Tires
P88	48	6	8 PR Blackwall Tires
Q14	48	7	8 PR Whitewall Tires
T14	48	6	8 PR Blackwall Tires
T15	48	7	8 PR Whitewall Tires
T60	74	4	Battery, Heavy Duty
T80	41	4	Guide Lamp Control
T86	45	1	Back-Up Lamps
T87	39	4	Cornering Lamps
U15	41	2	Safety Sentinel
U29	45	2	Courtesy Lamps
U35	43	2	Electric Clock
U40	45	4	Parking Brake Lamps
U63	46	1	Deluxe Radio
U65	46	2	Super Deluxe Radio
U69	46	4	AM-FM Radio
U75	47	1	Electric Antenna
U80	47	2	Rear Seat Speaker
U84	47	4	Rev. Rear Speaker
U89	55	2	Trailer Wiring Harness
U90	73	2	Wiring Harness and Reinforcement
U91	73	4	Flasher Wiring Harness
V55	69	1	Luggage Carrier
V56	69	2	Storage Comp. Locker
Y60	44	1	Accessory Package
Y67	61	4	Interior Option
Y68	60	4	Exterior Mouldings
Y75	74	2	Reinforced Wheel and Mountings
Y76	63	4	H.D. Engine Cooling
Y77	51	4	Wheel Cover and Luggage Mat

Revised 11-10-64

GEN 1.3*

1965 IBM ACCESSORY CODES

Alphabetical Reference

Acc. Letter	Column	Key Punch	Accessory
A01	58	1	Tinted Glass
A02	58	2	Tinted Windshield
A31	65	1	Electric 4-Window Lifts
A32	65	2	Electric C.V.
A33	67	2	Electric Rear Window
A39	66	2	Deluxe Seat Belts, Front and Rear
A40	64	4	Elec. 2-Way Seat (Bucket)
A41	64	1	Elec. 4-Way Seat (Bench)
A42	64	2	Elec. 6-Way Seat (Bench)
A46	64	8	Elec. 4-Way Seat (Bucket)
A49	66	1	Deluxe Seat Belts, Front
A62	66	9	Delete Front Seat Belts
A64	68	4	Standard Seat Belts, Rear
A66	67	1	Divided Second Seat
A74	72	1	Seat Springs, H.D., Front and Rear
A75	72	1	Seat Spring, H.D., Front (SW)
A91	44	2	Vacuum Trunk Lid Latch
A93	65	4	Side Door Lock Front and Rear
A98	74	1	Vac. Operated Rear Door Locks
B01	70	1	Police Apprehender (City)
B07	70	2	Police Apprehender (Highway)
B30	62	1	Wool Carpets
B32	51	1	Front Floor Mats
B33	51	2	Rear Floor Mats
B34	72	2	Front Floor Covering, H.D.
B35	72	4	Rear Floor Covering, H.D.
B36	51	4	Luggage Comp. Mat
B39	68	1	Carpeted Load Floor
B50	61	1	Foam Seat Cushion, Front
B52	61	2	Foam Seat Cushion, Rear
B70	59	1	Instrument Panel Pad
B80	60	1	Roof Drip Mouldings
B84	60	4	Ext. Side Mouldings
B85	60	2	Ext. Belt Mouldings
B90	59	2	Chrome Door-Window Frames
B93	52	4	Door Edge Guard Mouldings
C14	42	1	Two-Speed W/S Washer
C16	42	1	W/S Washer
C48	50	1	Delete Heater & Defroster
C50	50	2	Rear Window Defroster
C67	63	1	Air Conditioning
D26	62	2	Sun Shade
D31	42	2	Tilt-Type Mirror
D32	52	1	Outside R.V. Mirror
D33	52	2	Remote Control Outside Mirror
D55	62	2	Front Comp. Console
F35	56	1	Trailer Hauling Frame
G51	56	2	Trailer Hauling Springs
G66	55	1	Shock Absorbers
G80	53	1	Locking Type Differential
G91	54	1	Performance Axle
G92	54	2	Performance Axle
G93	54	3	Performance Axle
G94	54	4	Performance Axle
G95	54	5	Plains Axle

Acc. Letter	Column	Key Punch	Accessory
J50	39	2	Power Brakes
J56	71	2	H. D. Brakes
K20	50	4	Crankcase Ventilation
K30	41	1	Cruise Control
K32	73	1	Manual Throttle
L65	37	3	Regular Fuel Engine
L74	37	2	Cutlass Engine
L74	37	3	H. C. 4Bbl. Engine
L75	37	4	Starfire Engine
L76	37	5	Apprehender Engine
L77	37	6	Apprehender Engine
M01	55	4	H.D. Clutch
M11	38	1	3-Speed Column Shift
M12	38	2	3-Speed Floor Shift
M13	38	6	3-Speed Column Shift (For 4-4-2)
M20	38	3	4-Speed Syn.-Floor Shift
M21	38	7	4-Speed Floor Shift (4-4-2 Only)
M32	38	5	Jetaway for 4-4-2
M33	38	4	Jetaway
M34	38	8	H.D. Jetaway
M40	38	4	Hydra-Matic
M41	38	8	H.D. Hydra-Matic
N10	40	4	Dual Exhuast System
N30	43	1	Deluxe Steering Wheel
N31	40	2	Custom Deluxe Steering Wheel
N33	40	1	Tilt Steering Column
N38	71	1	Manual Steering, H.D.
N40	39	1	Power Steering
N93	49	3	Custom Wheel Discs
N95	49	5	Simulated Wire Wheel Covers
P01	49	1	Wheel Discs
P02	49	2	Deluxe Wheel Discs
P06	49	6	Wheel Trim Rings
P19	56	4	Spare Wheel Lock
P26	48	1	14" Whitewall Tires
P27	48	5	15" Whitewall Tires
P28	48	4	15" Blackwall Tires
P29	48	2	14" Oversize Tires
P30	48	3	14" Oversize W/W Tires
P88	48	6	8 PR Blackwall Tires
Q14	48	7	8 PR Whitewall Tires
T14	48	6	8 PR Blackwall Tires
T15	48	7	8 PR Whitewall Tires
T80	41	4	Guide Lamp Control
T86	45	1	Back-Up Lamps
T87	39	4	Cornering Lamps
U15	41	2	Safety Sentinel
U29	45	2	Courtesy Lamps
U35	43	2	Electric Clock
U40	45	4	Parking Brake Lamps
U63	46	1	Deluxe Radio
U65	46	2	Super Deluxe Radio
U69	46	4	AM-FM Radio
U75	47	1	Electric Antenna
U80	47	2	Rear Seat Speaker
U84	47	4	Rev. Rear Speaker
U89	55	2	Trailer Wiring Harness
U90	73	2	Wiring Harness and Reinforcement
U91	73	4	Flasher Wiring Harness
V55	69	1	Luggage Carrier
V56	69	2	Storage Comp. Locker
Y60	44	1	Accessory Package
Y67	61	4	Interior Option
Y68	60	4	Exterior Mouldings
Y75	74	2	Reinforced Wheel and Mountings
Y76	63	4	H.D. Engine Cooling
Y77	51	4	Wheel Cover and Luggage Mat

Revised 7-6-64

FOR ENGINEERING U.P.C.
OPTION LIST SEE ADVANCE
ENGINEERING ORDER

NO.. 65-512, SUPP. 12

BUILD DATE CODE LETTERS

JAN.	Z	JULY	S
FEB.	Y	AUG.	R
MAR.	X	SEPT.	P
APR.	W	OCT.	N
MAY	V	NOV.	L
JUNE	T	DEC.	K

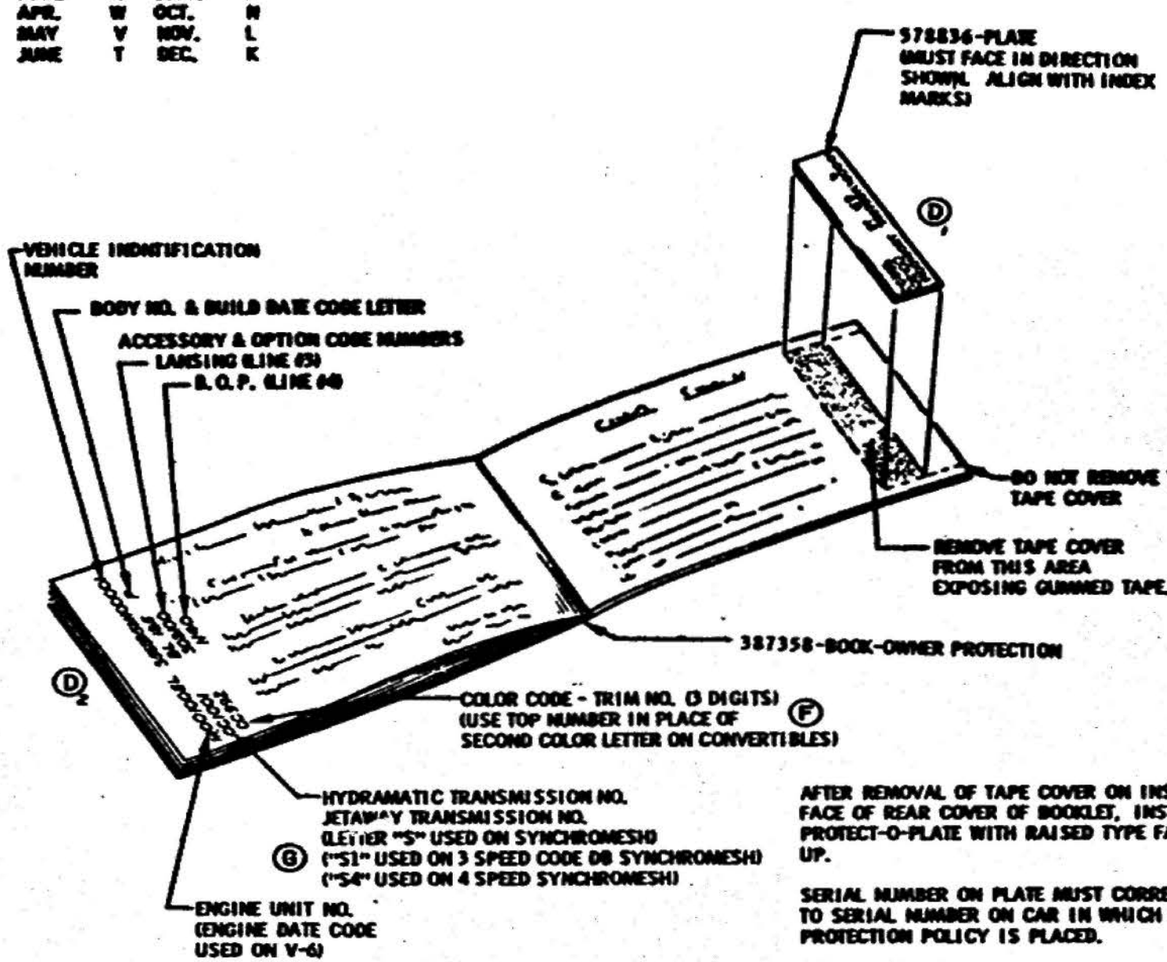

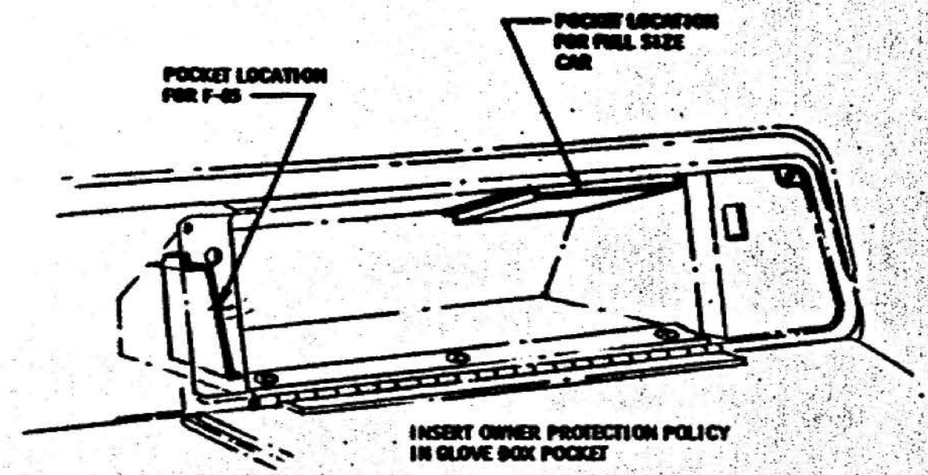

AFTER REMOVAL OF TAPE COVER ON INSIDE FACE OF REAR COVER OF BOOKLET, INSTALL PROTECT-O-PLATE WITH RAISED TYPE FACING UP.

SERIAL NUMBER ON PLATE MUST CORRESPOND TO SERIAL NUMBER ON CAR IN WHICH OWNER PROTECTION POLICY IS PLACED.

AFTER PLATE IS INSTALLED, FACTORY MUST USE ADDRESSOGRAPH IMPRINTING MACHINE (CLASS 500) TO PROOF PRINT PLATE ON THE OPPOSITE PAGE CONTAINING OLDSMOBILE SERVICE MESSAGE.

ACCESSORY AND OPTION CODE NUMBERS

LANSING PLANT

CODE NUMBER CALLED OUT ON BROADCAST FORM 522 FOR LISTED COLUMNS SHOULD BE COPIED ON PLATE, LINE 3. IF NO NUMBER APPEARS A ZERO "0" MUST BE USED. SIX (6) DIGITS MANDATORY.

COLUMN NUMBER	ACCESSORY	OPTION CODE
39	POWER STEERING AND/OR POWER BRAKES	N40 - J50
41	CRUISE CONTROL	K30
42	2 - SPEED WIPER	C14 OR C16
46	RADIO	U63, U65, U69
63	AIR CONDITION	C60
65	POWER WINDOWS	A31

B.O.P. PLANTS

OPTION CODES FOR ACCESSORIES AND OPTIONS, LIST ONLY ACCESSORIES INSTALLED ON LINE 4.

OPTION CODE	ACCESSORY
N40	POWER STEERING
J50	POWER BRAKES
C60	AIR CONDITION
A31	POWER WINDOWS
K30	CRUISE CONTROL
U63, U65, U69	RADIO

DATE	SYM	REVISION	DR.	CK.	DATE	SYM	REVISION	DR.	CK.	DATE	SYM	REVISION	DR.	CK.
										10-8-64	E	NOTE REVISED	LC	VF
										10-1-64	D2	PLATE NUMBERS REVISED	JH	PW
										9-31-64	C	BUILD DATE CODE RELOCATED	[illegible]	[illegible]
					3-25-63	G	NOTE REVISED	[illegible]	[illegible]	8-31-64	B	ACCESSORY & OPT CODE ADDED	[illegible]	[illegible]
					[illegible]	F	NOTE REVISED	[illegible]	[illegible]	3-19-64	A	NOTE REVISED	[illegible]	[illegible]

INSTALLATION — PROTECT-O-PLATE

DATE JAN 6, 1964

DR. BY J. PARKER

CHECKED H. VAN PELT

APPR.

APPR.

FIRST USED 1965

ILLUSTRATION

ISSUED BIG CAR AND F-85

REV. 0

PAGE GEN 2.1

PART NO. 387349

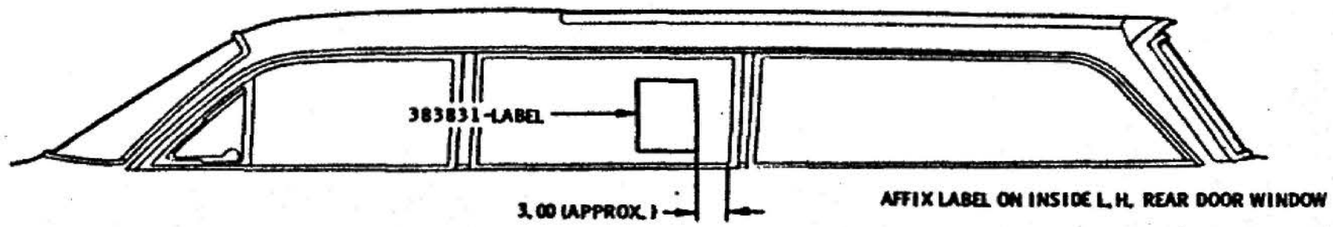

STATION WAGON MODELS

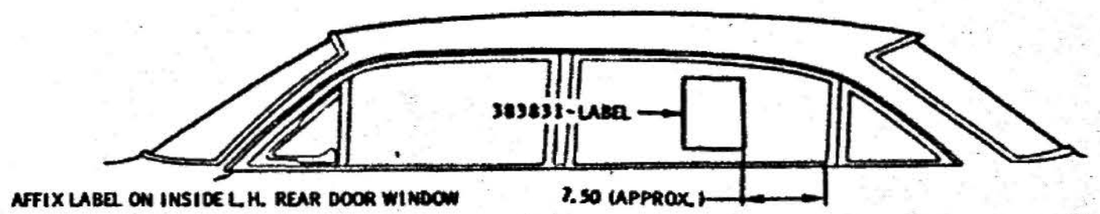

SEDAN MODELS

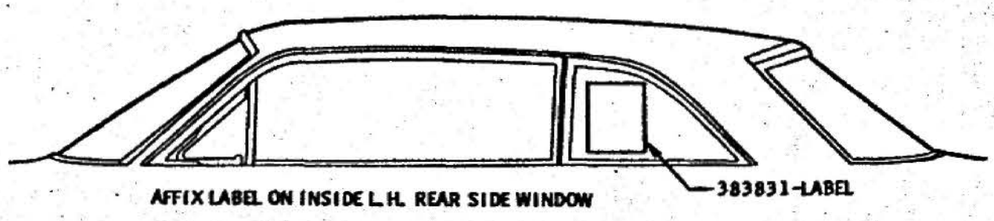

TWO DOOR COUPE MODELS & CONVERTIBLES

RETAIL PRICE LABEL

TYPING REQUIREMENTS:

KEELOX 41-75 (BLACK) OFFSET SILK RIBBON (FOR TYPEWRITERS)

KEELOX 41-78 (BLACK) OFFSET SILK RIBBON (FOR I. B. M. TYPE TABULATING MACHINES)

RIBBON MUST BE REPLACED AS SOON AS IT STARTS TO LOSE ITS ORIGINAL DARKNESS.

IT IS ESSENTIAL THAT THE TYPING REQUIREMENTS BE STRICTLY ADHERED TO. IF THE "KEELOX" RIBBONS SPECIFIED ARE NOT USED, THERE IS THE POSSIBILITY THAT THE TYPED LETTERS WILL FADE OUT WHEN SUBJECTED TO SUNLIGHT.

METHOD OF APPLICATION:

WET LABEL, USING A POTDEVIN OR SIMILAR MACHINE CONTAINING WATER INSTEAD OF GLUE. THE LABELS ARE TO BE PASSED THROUGH THE MACHINE SO THAT THE FACE (ADHESIVE) SIDE IS MOISTENED AND THE LABEL THEN AFFIXED IN THE SPECIFIED LOCATION ACCORDING TO BODY STYLE.

AFTER LABEL IS ATTACHED TO THE INSIDE OF THE GLASS, A SQUEEGE SHOULD BE USED TO REMOVE ALL AIR POCKETS.

DATE	SYM	REVISION	DR.	CK.	DATE	SYM	REVISION	DR.	CK.	DATE	SYM	REVISION	DR.	CK.

INSTALLATION
DATE JAN. 17, 1964
DR. BY B. PARKER
CHECKED H. VAN PELT
APPR.
APPR.

LABEL LOCATIONS

FIRST USED 1965 | Oldsmobile GRAPHIC ILLUSTRATION | PAGE GEN.-3.1

SERIES F85 | REF. 1A2E | PART NO. 387348

OLDSMOBILE DIVISION GENERAL MOTORS CORPORATION LANSING 21, MICHIGAN

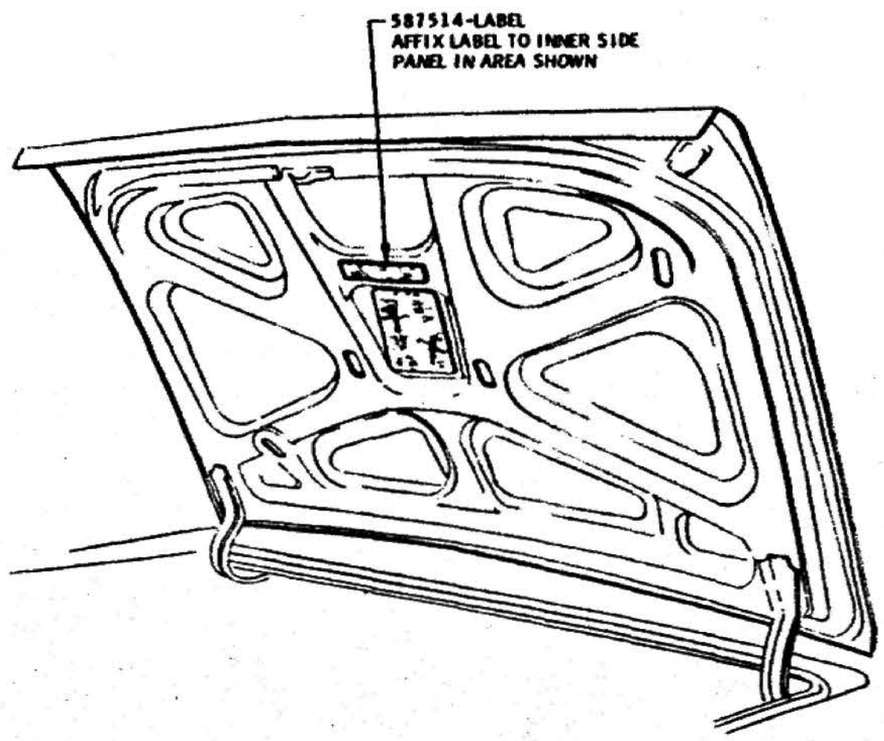

LOCATION OF ANTI-SPIN DIFFERENTIAL LABEL

FOR ALL MODELS EXC. STATION WAGONS

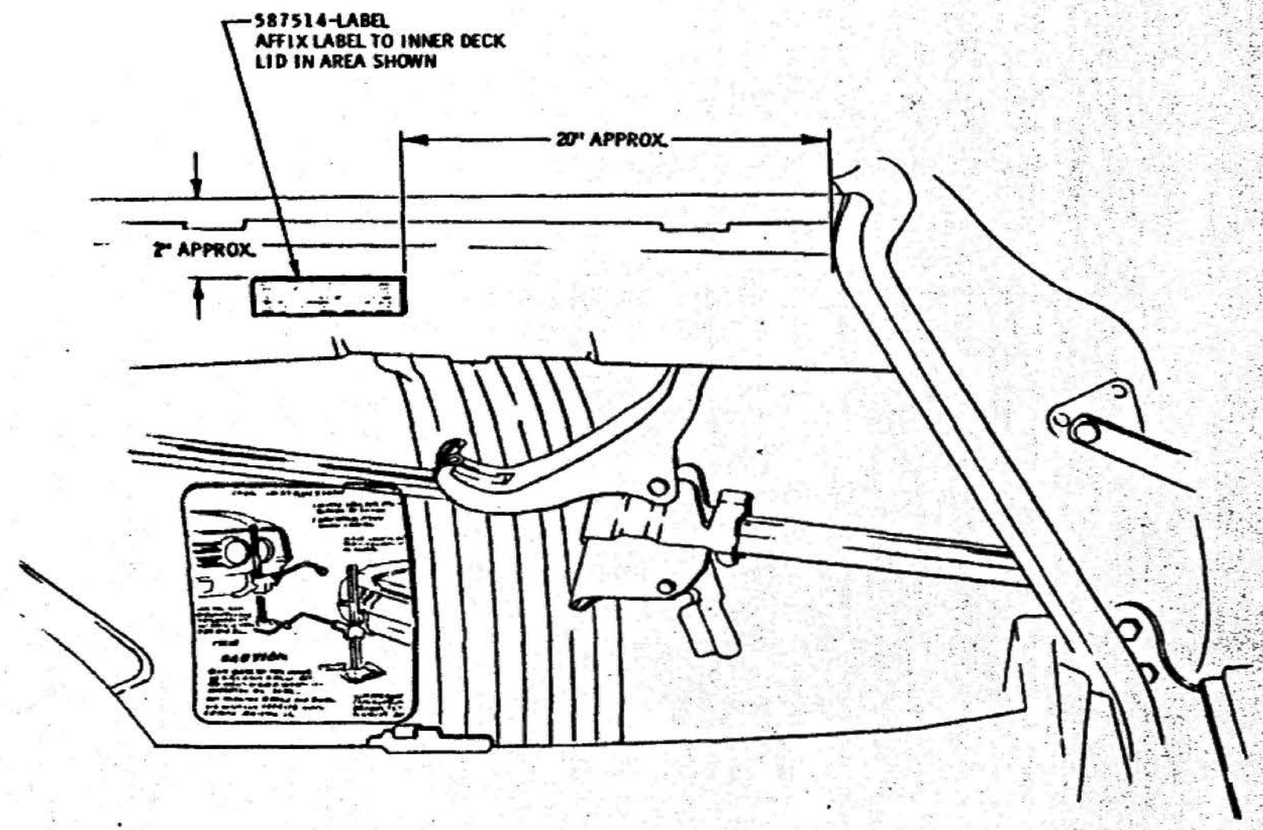

LOCATION OF ANTI-SPIN DIFFERENTIAL LABEL

FOR STATION WAGONS ONLY

DATE	SYM	REVISION	DR.	CK.	DATE	SYM	REVISION	DR.	CK.	DATE	SYM	REVISION	DR.	CK.

INSTALLATION

DATE JAN. 17, 1964
DR. BY B. PARKER
CHECKED H. VAN PELT
APPR.
APPR.

LABEL LOCATIONS

FIRST USED 1965 — Oldsmobile GRAPHIC ILLUSTRATION

SERIES F85 — REF. 35680

PAGE GEN.-3.2

PART NO. 387348

(1) VEHICLE IDENTIFICATION NUMBER
- ON EMBOSSED PLATE LOCATED ON BODY LEFT FRONT DOOR HINGE PILLAR.
- ON EXPORT C.K.D. BLANK PLATE 387839 IS SHIPPED AS ORDERED BY EXPORT WITH ATTACHING RIVET 3695654.
- SEE CHART 387713 FOR VEHICLE PLATE COMBINATIONS AND STARTING SERIAL NUMBERS.

(2) ENGINE UNIT NUMBER - (FOR MANUFACTURING AND SERVICE USE)

V-6 ENGINE - THERE IS NO V-6 ENGINE SERIAL NUMBER. A DATE CODE IS STAMPED ON THE CYLINDER BLOCK DECK FACE ON THE R.H. SIDE (BETWEEN BRANCHES OF EXHAUST MANIFOLD). THE DATE CODE CONSISTS OF TWO LETTERS AND THREE DIGITS. THE FIRST LETTER INDICATES THE MODEL YEAR (L FOR 1965), THE SECOND LETTER INDICATES ENGINE USAGE (H FOR STANDARD COMPRESSION, J FOR EXPORT LOW COMPRESSION) AND THE THREE DIGITS IDENTIFIES THE NUMBER OF THE SHIFT THAT THE ENGINE WAS RUN OR AN ENGINEERING CHANGE.

V-8 ENGINE - UNIT NUMBER IS STAMPED ON MACHINED PAD ON THE FRONT OF THE R.H. CYLINDER HEAD. ALL V-8 330 CU. IN. ENGINES FOR THE ABOVE MODELS ARE NUMBERED CONSECUTIVELY FROM ONE BLOCK OF SIX DIGIT NUMBERS STARTING WITH 500001 AND PREFIXED AND SUFFIXED AS FOLLOWS. ALL V8 400 CU. IN. ENGINES ARE NUMBERED CONSECUTIVELY FROM ONE BLOCK OF SIX DIGIT NUMBERS STARTING WITH 001001 AND PREFIXED AS FOLLOWS:

ADD PREFIX "T" FOR ALL V-8 330 CU. IN. ENGINES (33400-33600-33800 SERIES ONLY)
ADD SUFFIX "G" FOR ALL 4 BBL. HIGH COMP. (33827, 33837, 33867 AND L74 & L76 OPTIONS)
SUFFIX "E" FOR ALL 2 BBL. LOW COMP. EXPORT OPTION
SUFFIX "H" FOR ALL 4 BBL. LOW COMP. EXPORT OPTION
SUFFIX "L" FOR ALL L65 LOW COMP. OPTION

EXAMPLES: - T500001 - 2 BBL. CARB. - STD. COMPRESSION
- T500002G - 4 BBL. CARB. - HIGH COMP. (33827, 33837, 33867 AND L74 & L76 OPTIONS)
- T500003E - 2 BBL. CARB. - LOW COMP. EXPORT OPTION
- T500004H - 4 BBL. CARB. - LOW COMP. EXPORT OPTION
- T500005L - 4 BBL. CARB. - L65 LOW COMP. OPTION

ADD PREFIX "V" FOR ALL V-8 400 CU. INCH ENGINES (L77 & L78 OPTIONS)
EXAMPLE: - V001001 - 4 BBL. CARB. - L77 & L78 OPTION

(3) TRANSMISSION SERIAL NUMBER:-

DEPENDING ON TYPE OF 3 SPEED OR 4 SPEED MANUAL TRANSMISSION, THE DATE CODE OR SERIAL NUMBER WILL BE AS FOLLOWS:

TYPE
(S) STANDARD SMT:-STAMPED ON REAR FACE OF CASE ON RH SIDE.
EXAMPLE:-S0503 (S-SAGINAW TRANS. PLANT; 05-FIFTH MONTH; 03-THIRD DAY OF MONTH)
M13 TRANS. (CARS BUILT PRIOR TO 2-8-65):-STAMPED ON RH REAR SIDE OF CASE.
EXAMPLE:-WF543 (W-MFG.-WARNER GEAR; F-SIXTH MONTH; 5-DAY OF MONTH; 4-YEAR-1964; 3-SHIFT NO.)
M13 TRANS. (CARS BUILT AFTER 2-8-65) & M14-SERIAL PLATE LOCATED ON RH SIDE OF CASE.
EXAMPLE:-HEGAF-MODEL NO.
010001-SERIAL NO. (CONSECUTIVELY STARTING 010001)
M20 & M21 4 SPEED:-STAMPED ON RH REAR CASE FLANGE AT APPROX. CENTERLINE OF MAIN SHAFT BORE.
EXAMPLE:-P0503 (P-MUNCIE TRANS. PLANT; 05-FIFTH MONTH; 03-THIRD DAY OF MONTH)

JETAWAY TRANSMISSION YEAR, MODEL & DATE CODE INFORMATION IS STAMPED ON THE BAND SERVO COVER WHICH IS LOCATED ON THE R.H. SIDE OF THE TRANSMISSION. THIS INFORMATION CONSISTS OF TWO DIGITS FOR THE MODEL YEAR, TWO LETTERS FOR THE MODEL CODE & THREE DIGITS TO INDICATE THE DAY OF PRODUCTION THAT THE TRANSMISSION WAS BUILT.

FOR MODEL CODE & TRANSMISSION USAGE, SEE CHART 388366.

(4) PONTIAC REAR AXLES

RATIO CODE: STAMPED ON REAR OF R.H. AXLE TUBE NEAR THE CARRIER - SEE REAR AXLE ASSEMBLY CHART (U) 388099 FOR CODES

DATE CODE: STAMPED ON THE DIFFERENTIAL CARRIER COVER.

A - JANUARY	D - APRIL	H - JULY	L - OCTOBER
B - FEBRUARY	E - MAY	J - AUGUST	M - NOVEMBER
C - MARCH	G - JUNE	K - SEPTEMBER	N - DECEMBER

THE MONTH LETTER IS FOLLOWED BY A NUMBER FOR THE DAY OF THE MONTH IN WHICH THE DIFFERENTIAL WAS BUILT.

BUICK REAR AXLES

AXLE RATIO CODE: STAMPED ON THE REAR OF THE R.H. AXLE TUBE NEAR THE CARRIER - SEE REAR AXLE ASSEMBLY (Up) CHART 388099 FOR CODES

(T) DATE CODE - STAMPED ON BOTTOM OF R.H. AXLE TUBE. CODE CONSISTS OF TWO (2) LETTERS OR DIGITS WHICH INDICATE RATIO (CHART #1370157) FOLLOWED BY ONE (1) TO THREE (3) DIGITS FOR DAY IN THE YEAR MANUFACTURED. ⊗ SYMBOL PRECEDING THE RATIO - DATE CODE INDICATES A LOCKING AXLE.
SAMPLE MARKING FOR AXLE MANUFACTURED ON DECEMBER 18, 1964 MIGHT BE:
STD. AXLE 76-353; LOCKING AXLE ⊗ 91-353

DOMESTIC AND S.U.P. EXPORT

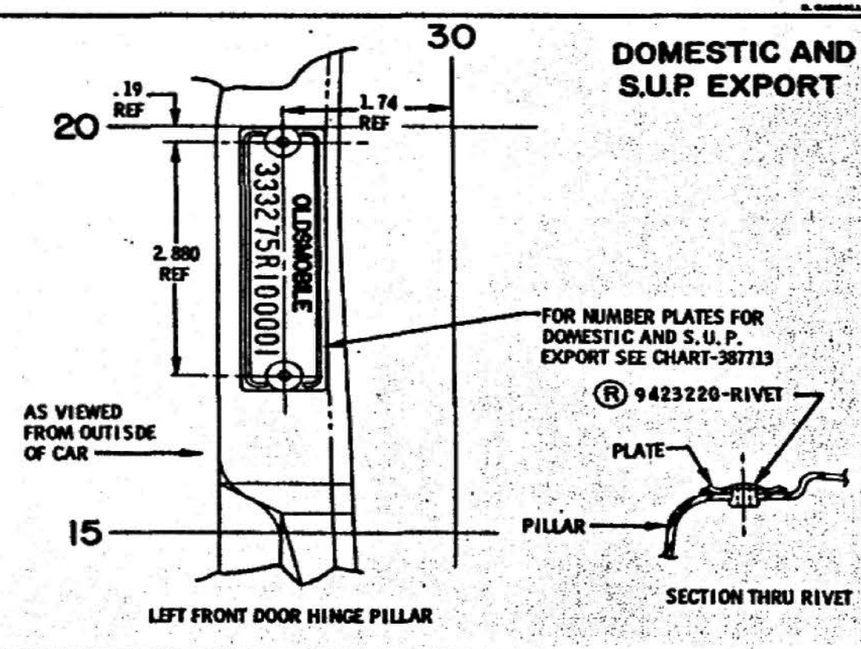

C.K.D. EXPORT

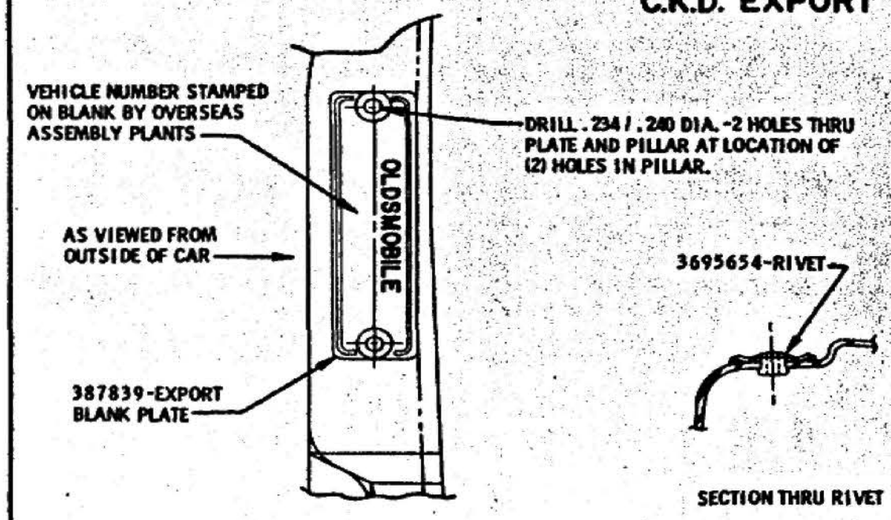

(5) PROTECTIVE VEHICLE NUMBER: -

THE LAST EIGHT (8) SYMBOLS OF THE VEHICLE NUMBER ARE STAMPED AT SEVERAL PLACES ON EVERY CAR. LOCATION OF THIS NUMBER MAY BE OBTAINED BY CONTACTING EITHER OF THE FOLLOWING OFFICES. PRODUCTION MANAGER OR STANDARDS ENGINEERING DEPARTMENT.

DATE	SYM	REVISION	DR.	CK.	
2-2-65	Up	WAS 386072	NG	JA	INSTALLATION
2-2-65	T	NOTE REVISED	NG	JA	DATE MARCH 2, 1964
2-2-65	S	M13 & M14 OPT. ADDED	NG	JA	DR. BY R. HOOVER
10-9-64	R	WAS 9422519	DS	JA	CHECKED
					APPR.
					APPR.

VEHICLE NUMBER PLATE

FIRST USED 1965 | Oldsmobile Division ILLUSTRATION | PAGE GEN-4.1

SERIES F-85 | REF. | PART NO. 388258

OLDSMOBILE DIVISION

GENERAL MOTORS CORPORATION
LANSING 21, MICHIGAN

PART NO.	MODEL YEAR & PLANT IDENTITY	PLANT	STARTING SERIAL NO.
387839	NONE		BLANK
387706	5M	LANSING, MICHIGAN	100001
387707	5R	ARLINGTON, TEXAS	100001
387708	5D	ATLANTA, GEORGIA	100001
387839	5B	BALTIMORE, MARYLAND	100001
387709	5Z	FREMONT, CALIFORNIA	100001
387710	5X	KANSAS CITY, KANSAS	100001
387839	5K	KANSAS CITY, MISSOURI	100001
387711	5E	LINDEN, NEW JERSEY	100001
387712	5C	SOUTH GATE, CALIFORNIA	100001

BLANK- HAS "OLDSMOBILE" ONLY

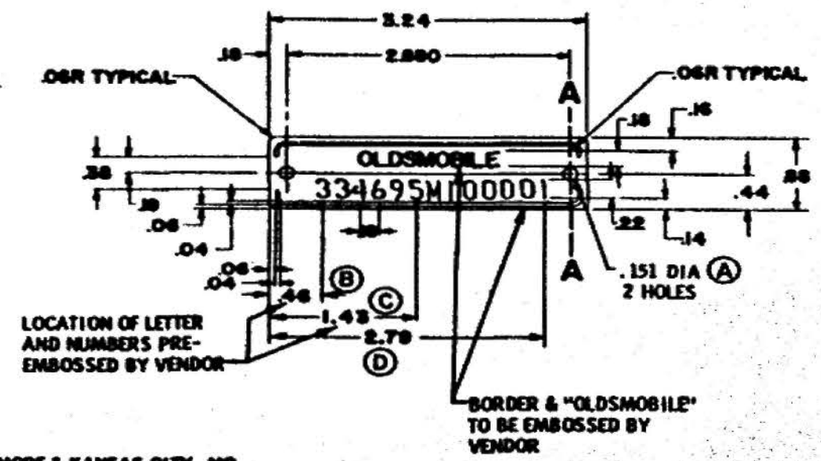

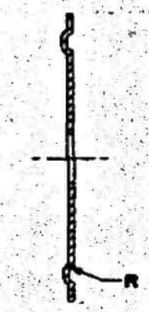

SECTION A-A
FOUR TIMES SIZE

BALTIMORE & KANSAS CITY, MO. WILL BE FURNISHED BLANKS (387839) BALANCE OF PLANTS TO RECEIVE PRE-EMBOSSED PLATES.

	NAME	SERIES	SERIES & ENGINE NO. (TO BE EMBOSSED AT ASSEMBLY PLANTS AS THE FIRST, SECOND & THIRD PREFIX DIGIT)
F-85	STD. V-6 ENGINE	33300	33
	STD. V-8 ENGINE	33400	34
	DELUXE V-6 ENGINE	33500	35
	DELUXE V-8 ENGINE	33600	36
	CUTLASS V-8 ENGINE	33800	38
	CUSTOM WAGON V-8 ENGINE	33800	38
FULL SIZE CAR	JETSTAR 88 SERIES	35200	52
	JETSTAR 1	35400	54
	DYNAMIC 88 SERIES	35600	56
	DYNAMIC 88 DELTA SERIES	35800	58
	STARFIRE SERIES	36600	66
	NINETY-EIGHT SERIES	38400	84
	NINETY-EIGHT LUXURY	38600	86
	DRIVEAWAY CHASSIS (LANSING ONLY)	39800	98

(E)

EXAMPLE:

333275R100001 335695D100001 338675Z100001

EMBOSSED BY ASSEMBLY PLANT (4 DIGITS)

352395X100001 356675E100001 384695M100001

PRE-EMBOSSED BY VENDOR AS INSTRUCTED ON PURCHASE ORDER. SERIAL NUMBER TO BE IN CONSECUTIVE ORDER REGARDLESS OF SERIES PREFIX.

PLANT SEQUENTIAL NUMBER
PLANT
MODEL YEAR
BODY TYPE
ENGINE TYPE
SERIES
DIVISIONAL CODE

BODY TYPE	BODY CODE
CLUB COUPE	27
STATION WAGON - 2 SEAT	35
HOLIDAY COUPE	37
HOLIDAY SEDAN	39
STATION WAGON - 2 SEAT (EXTENDED)	55
HARDTOP COUPE	57
STATION WAGON - 3 SEAT (EXTENDED)	65
CONVERTIBLE	67
4 DOOR SEDAN	69
SHORT SILL COWL	60

(E)

BCDEKMRXZ
1234567890
SHAPE MANDATORY ON THESE LETTERS & NUMBERS

MATERIAL:
STAINLESS STEEL-SAE #51430
.014 STOCK

PRODUCTION SAMPLE TO BE APPROVED BY PRODUCT ENGINEERING FOR OLDSMOBILE PARTS.

DATE	SYM	REVISION	DR.	CK.	DATE	SYM	REVISION	DR.	CK.	DATE	SYM	REVISION	DR.	CK.
										9-14-64	E	SHORT SILL COWL ADDED	JA	
										4-28-64	D	DIM. ADDED		
										4-28-64	C	1.43 WAS .95		
										4-28-64	B	.46 WAS .42		
										4-28-64	A	WAS .140 DIA HOLES		

CHART
DATE JAN. 30, 1964
DR. BY R. HOOVER
CHECKED
APPR.
APPR.

PLATE-VEHICLE NUMBER

FIRST USED 1965

Oldsmobile GRAPHIC ILLUSTRATION

SERIES: ALL MODELS

REF.

PAGE GEN-5.1*

PART NO. 387713

MATERIAL TO BE PLACED IN GLOVE BOX		
PART NUMBER	DESCRIPTION	USAGE
1. 387359	OWNER OPERATING MANUAL	ALL CARS
2. 387358 578836	OWNER PROTECTION POLICY BLANK } SEE PAGE GEN-2.1	ALL CARS
3. 7002202 7002232	KEY (1 IGNITION AND KEY 2 TRUNK)	ALL CARS
4. 4225575	POWER FOLDING TOP GUIDE BOOK	CONVERTIBLES ONLY
5. 387360	PRE-DELIVERY CHECK SHEET	ALL CARS
6. 383508	LICENSE PLATE PARTS PACKAGE	ALL CARS
7. 570340	ELECTRIC ANTENNA TAG	CARS WITH U75 EQUIP ONLY

MATERIAL TO BE PLACED IN TRUNK		
PART NUMBER	DESCRIPTION	USAGE
1. 588584	FRONT LICENSE PLATE SUPPORT	ALL CARS
2. 589724 587071	ANTENNA MAST-REGULAR CAR ANTENNA MAST-F-85	CARS WITH U63, U65, OR U69 EQUIPMENT ONLY
3.	HUB CAPS WHEEL DISCS } SEE PAGE C-5.2 FOR MATL'S.	ALL CARS
4. 387900 TO 387920	AUXILIARY FLOOR MATS	CARS WITH B32 AND/OR B33 EQUIPMENT ONLY
Ⓐ 5. 388416	FILLER-FRONT SEAT BACK (PAPER TISSUE & TOWEL PKG.)	98 LUXURY SEDANS

DATE	SYM	REVISION	DR.	CK.	DATE	SYM	REVISION	DR.	CK.	DATE	SYM	REVISION	DR.	CK.
										4-2-65	A	388416 ADDED	JG	JT

CHART — LOOSE PART STOWAGE

DATE JAN 28, 1965
DR. BY J.L. GRAY
CHECKED J.N. Ames
APPR.
APPR.

FIRST USED 1965
SERIES ALL
REV.
Oldsmobile GRAPHIC ILLUSTRATION
PAGE GEN.-6.1
PART NO. 392033

BODY

DRAWING NO.	DRAWING NAME	PAGE NO.
387269	CONSOLE - JETAWAY TRANSMISSION	1 - 2.1
387268	CONSOLE - SYNCHROMESH TRANSMISSION	1 - 3.1
389255	OUTSIDE REAR VIEW MIRROR	1 - 4.1
387363	DOOR EDGE GUARDS	1 - 5.1
386185	BODY PARTS	1 - 6.1
387459	FRONT CARPET COVER	1 - 7.1
387346	LUGGAGE CARRIER	1 - 8.1
388086	CONSOLE SHOP ASSEMBLY	1 - 9.1
389404	INSIDE REAR VIEW MIRROR	1 - 10.1
390293	VISOR VANITY MIRROR	1 - 11.1
386345	REMOTE CONTROLLED MIRROR	1 - 12.1
386545	TRUNK LID RELEASE	1 - 13.1

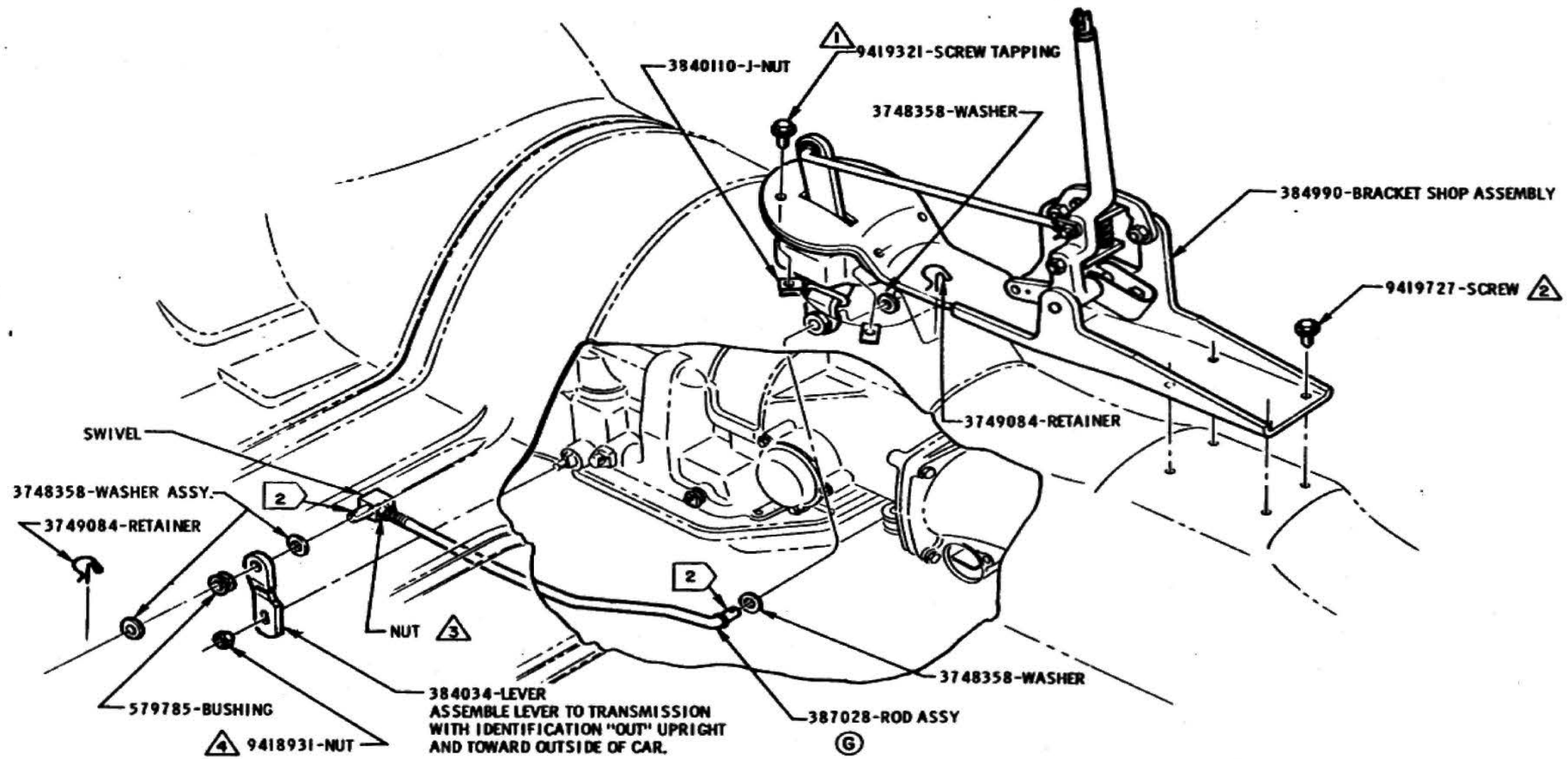

EXPLODED VIEW OF SHIFT CONTROL LEVER INSTALLATION

SHIFT CONTROL ADJUSTMENT

SET TRANSMISSION LEVER 384034 IN DRIVE DETENT. ASSEMBLE ROD ASSEMBLY 387028 TO BRACKET SHOP ASSEMBLY 384990.

WHILE PULLING FORWARD LIGHTLY TO REMOVE LASH, ASSEMBLE ROD ASSEMBLY 387028 TO 384034 LEVER AND ADJUST TO "FREE PIN". THEN LENGTHEN BY ONE TURN. THIS MOVES SHIFT LEVER AWAY FROM STOP.

H LUBRICATE AREAS INDICATED WITH 9985038 GREASE (2)

J

1 36-60 LBS. IN.
2 72-94 LBS. IN.
3 96-132 LBS. IN.
4 16-26 LBS. FT.

DATE	SYM	REVISION	DR.	CK.	DATE	SYM	REVISION	DR.	CK.	DATE	SYM	REVISION	DR.	CK.
					11-27-64	J	TORQUE SPECS ADDED			8-4-64	E	ROD SWIVEL & NUT NOW ROD ASSY		
					11-27-64	H	LUBE NOTE ADDED			4-17-64	D	579785 PT. NO. ONLY REM'D.		
					9-21-64	G	WAS 383660-ROD			4-[illegible]-64	C	WAS 387028 ROD ASSY		
					9-9-64	F	WAS 387028-ROD ASSY			3-25-64	B	WAS ONE & ONE HALF TURNS		
										2-6-64	A	WAS 383659 ROD ASSY		

INSTALLATION — CONSOLE—JETAWAY TRANSMISSION

DATE JAN. 4, 1964
DR. BY C.E. MAY
CHECKED H. VAN PELT
APPR.
APPR.

FIRST USED 1965

Oldsmobile GRAPHIC ILLUSTRATION

SERIES F85

REF. TR-4286 35-17-35 32-D-35

PAGE 1-2.1

PART NO. 387269

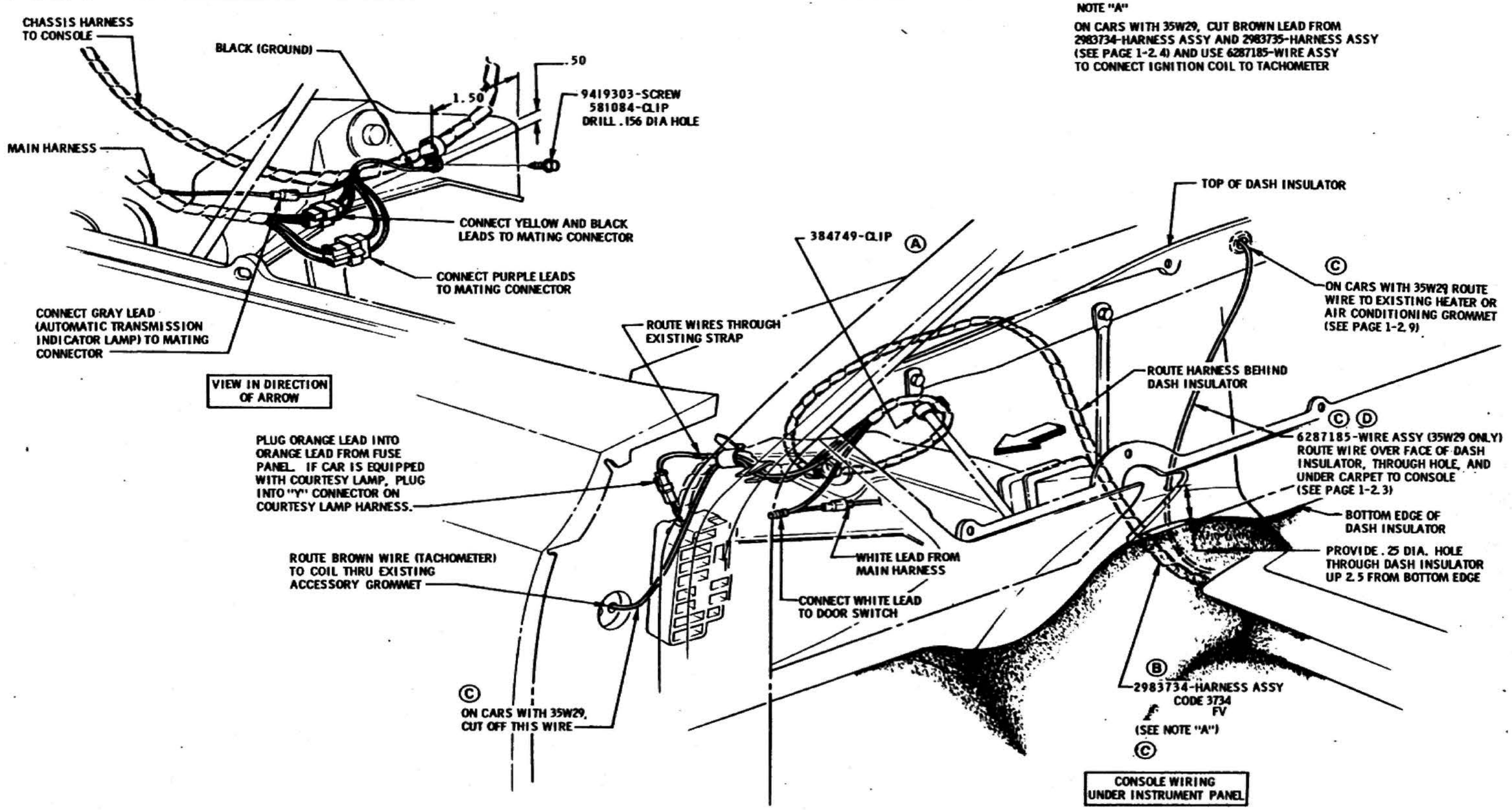

DATE	SYM	REVISION	DR.	CK.	DATE	SYM	REVISION	DR.	CK.	DATE	SYM	REVISION	DR.	CK.
										4-20-65	D	NOTE REVISED	JJ	VP
										2-12-65	C	35W29 INFOR. ADDED		VP
										7-14-64	B	CODE ADDED		BF
										2-11-64	A	384749 CLIP RELOCATED		VP

INSTALLATION	CONSOLE - JETAWAY TRANSMISSION		
DATE JAN. 4, 1964	FIRST USED 1965	Oldsmobile GRAPHIC ILLUSTRATION	PAGE 1-2.2
DR. BY C.E. MAY			
CHECKED H. VAN PELT	SERIES F85	REF. 35D55	PART NO. 387269
APPR.			
APPR.			

CHARTS

DRAWING NO.	DRAWING NAME	PAGE NO.
380221	WINDSHIELD WASHER SOLUTION	C - 2.1
387899	HEADLAMP FOCUS	C - 3.1
389390	INHIBITED YEAR AROUND COOLANT	C - 4.1
---	LUBRICANTS & PROCESS MATERIALS	C - 5.1
384690	ROLL TEST PROCEDURE	C - 6.1
		C - 7.1
---	WRENCH TORQUE	C - 8.1
389076	CODE RADIATOR HOSE	C - 9.1
387949	PAINT & TRIM SPECIFICATIONS	C - 10.1
		C - 11.1
		C - 12.1
		C - 13.1
		C - 14.1
		C - 15.1
		C - 16.1
387794	PAINT - CHASSIS ASSEMBLY	C - 17.1
387956	SPEEDOMETER GEARS	C - 18.1

1965 - F85 & JETSTAR ENGINE ASSEMBLIES

PROCEDURE FOR CONVERTING ALL 330 ENGINES TO 35K20

ITEM	REMOVE	INSTALL
Valve Cover Assembly (LH)	382141	385202
Valve Assembly - Vent (LH)	------	6419564
Grommet - Valve to LH Valve Cover	------	385283
Clamp - Hose to Vent Valve (LH)	------	3786276
Gasket - Valve Cover (LH)	382935 (Scrap)	382935
Cap Assembly - Oil Filler	6418875	6420459
Connector - Hose to Carburetor	588238	1357031
Grommet - Filter to Valve Cover (RH)	385204	385284
Filter Assembly - Vent (RH)	6419630	387198
Grommet - Vent Pipe to Filter (RH)	------	581112
Hose - Vent Pipe to Valve (RH)	385285	------
Clamp - Hose to Vent Valve	272852	------
Hose - Vent Valve to Carburetor	382891	383304

C-1-2*

PROCEDURE FOR CONVERTING 35K20 ENGINES TO STANDARD

Valve Assembly - Vent (LH)	6419564	------
Grommet - Valve to LH Valve Cover	385283	------
Clamp - Hose to Vent Valve (LH)	3786276	------
Plug - LH Valve Cover	------	386676
Connector - Hose to Carburetor	1357031	588238
Hose - Vent Valve to Carburetor	383304	382891
Grommet - Vent Valve to Valve Cover (RH)	------	385204
Valve Assembly - Vent (RH)	------	6419630
Hose - Vent Pipe to Vent Valve (RH)	------	385285
Clamp - Hose to Vent Valve (RH)	------	272852

1965 - F85 & JETSTAR ENGINE ASSEMBLIES

PROCEDURE FOR CONVERTING 330 BIG CAR ENGINES TO 35C60

ITEM	REMOVE	INSTALL
* Body Assembly	386393	387239
Gasket - Water Pump	385936 (Scrap)	385936
Connector - Fuel Pump Outlet	143343	386940
Bracket - Generator	382787	------
Bolt 2	9418994	------
Washer 2	103321	------
Cable Assembly - Spark Plug #2	2988276	2988278
Valve Assembly - Water Control	383099	589033
Carburetors		
2 Barrel - AT	7025056	7025057
2 Barrel - SM	7025058	7025059
4 Barrel - AT	7025054	7024154
4 Barrel - SM	7025055	7025155
Heater Vacuum Connector	103877	382890

PROCEDURE FOR CONVERTING F-85 V8 ENGINES TO 35C60

Gasket	385936 (Scrap)	385936
* Water Pump Assembly	386393	387239
Bracket - Generator	382787	------
Bolt Bracket to Cylinder Head	9418994 (2)	------
Washer - Bracket to Head	103321 (2)	------
Cable Assembly - Spark Plug #2	2988276	2988278
Connector - Heater Vacuum	103877	382890
Valve - Water Control	383099	589033
Carburetors		
2 Barrel - AT	7025056	7025156
2 Barrel - SM	7025058	7025159
4 Barrel - AT	7025154	7025157
4 Barrel - SM	7025055	7025158

C-1.3*

PROCEDURE FOR CONVERTING ALL 330 ENGINES TO 35Y76

* Body Assembly	386393	387239
Gasket - Water Pump	385936 (Scrap)	385936

* Water pump bodies must be painted with engine enamel.

R. GARNOLL, INC. 14791-

OLDSMOBILE DIVISION
GENERAL MOTORS CORPORATION
LANSING, MICHIGAN

IT WILL BE THE FULL RESPONSIBILITY OF THE INDIVIDUAL "PLANT MANAGER" TO DETERMINE THE CONCENTRATION OF WASHER SOLVENT NECESSARY TO INSURE OPERATION OF THE WINDSHIELD WASHER SYSTEM FOR CARS PRODUCED IN HIS PLANT DOWN TO A MINIMUM TEMPERATURE OF 0°F. DURING THE PERIOD OF SEPTEMBER 1 TO MAY 1. NO SOLVENT IS TO BE USED IN THE WASHER SYSTEM BETWEEN MAY 1 AND SEPTEMBER 1.

CLIMATIC CONDITIONS OF THE AREA INTO AND/OR THRU WHICH THE CAR IS BEING SHIPPED WILL CONTROL THE PERCENTAGE OF SOLVENT USED.

THE AMOUNT OF SOLUTION SHOULD BE REGULATED SO THAT A MINIMUM OF 8 OZ. IS LEFT IN THE JAR WHEN THE CAR IS SHIPPED. IF WATER IS USED IN THE PLANT TO TEST THE SYSTEM, THE JAR MUST BE DRAINED AND THE WASHER CYCLED TWO OR THREE TIMES AFTER THE ADDITION OF THE SOLVENT SOLUTION TO CLEAR THE WATER OUT OF THE NOZZLES, MOTOR AND HOSES. THE FOLLOWING TABLE SHOWS THE RATIO OF SOLVENT TO WATER REQUIRED FOR VARYING DEGREES OF PROTECTION.

FREEZING POINT	MIXTURE SOLVENT TO WATER	AMOUNT OF 9985047 SOLVENT TO MAKE 55 GAL. OF SOLUTION (ADD WATER)
0°F.	1:1.5	22 GAL.
8°F.	1:2	18.3 GAL.
16°F.	1:3	13.75 GAL.
24°F.	1:6	7.87 GAL.

AT NO TIME IS THE RATIO OF SOLVENT TO WATER TO EXCEED 1:1.5. THIS MIXTURE WILL FREEZE AT 0°F.

(B)

(A) PRODUCTION SAMPLE TO BE APPROVED BY PRODUCT ENGINEERING FOR OLDSMOBILE PARTS.

(C) SOLVENT TO BE USED IS SHOWN UNDER G.M. STANDARD PART NO 9985047

DATE	SYM.	REVISION RECORD	AUTHORITY	DR.	CK.
12-20-63	A	NOTE REVISED		DWT	
2-5-64	B	NOTE REMOVED		MT	
2-15-69	C	NOTE ADDED		MT	

TOLERANCES UNLESS OTHERWISE SPECIFIED ± .02 ALLOWED ON TWO PLACE DECIMALS ± .010 ALLOWED ON THREE PLACE DECIMALS.

ON ALL CASTINGS AND FORGINGS ALLOW FOR FINISH AS FOLLOWS F_1=.030; F_2=.06; F_3=.09; F_4=.12; ETC.

COMMERCIAL TOLERANCES APPLY TO SHEET METAL GAUGES, TUBING, ROLLED, DRAWN OR EXTRUDED SECTIONS AND STANDARD PARTS.

DO NOT SCALE

DFG. DATE January 3, 1962	DR. Phyllis Bengel
SCALE	CK. R. J. Schultz
FIRST USED 1962	APPR.
	APPR.
REFERENCE	APPR.
MATERIAL SPEC. "FACTORY FILL"	
NAME CHART - WINDSHIELD WASHER SOLUTION	
B	PART NO. 380221

LAST CHANGE C

NO. 380221

PAGE C-2.1*

ALL

D D

OLDSMOBILE

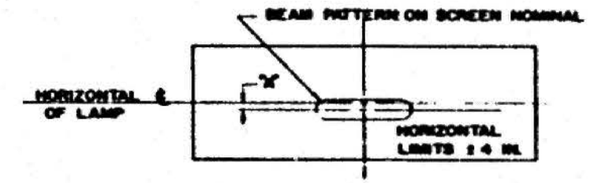

DIMENSION "A" — GAS TANK EMPTY - 1.00 TO 3.00 BELOW HORIZ. ℄
GAS TANK FULL - ON HORIZ. ℄ TO 2.00 BELOW

FOR SINGLE BEAM
SINGLE FILAMENT
UNIT

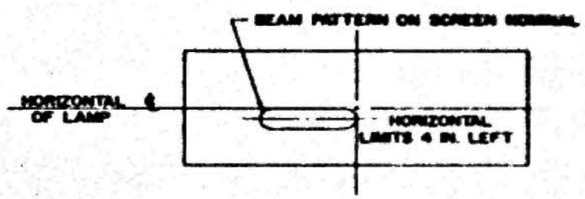

GAS TANK EMPTY - TOP OF HOT SPOT 1.00 BELOW HORIZONTAL ℄ TO 1.00 ABOVE.

GAS TANK FULL - TOP OF HOT SPOT AT HORIZONTAL ℄ TO 2.00 ABOVE.

FOR LOWER BEAM
TWO FILAMENT
UNIT

THE ABOVE AIMING INSTRUCTIONS APPLY WITH A 25 FT. DISTANCE BETWEEN THE VEHICLE HEADLIGHTS AND THE AIMING SURFACE.

EXPORT

FOR LEFT RULE OF ROAD

FOR DEALER USE

THE AIMING INSTRUCTIONS BELOW APPLY WITH A 25 FT. DISTANCE BETWEEN THE VEHICLE HEADLIGHTS AND THE AIMING SURFACE.

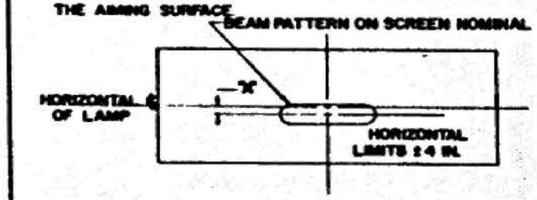

DIMENSION "A" — GAS TANK EMPTY - 1.00 TO 3.00 BELOW HORIZONTAL ℄
GAS TANK FULL - ON HORIZONTAL ℄ TO 2.00 BELOW.

FOR SINGLE BEAM
SINGLE FILAMENT UNIT

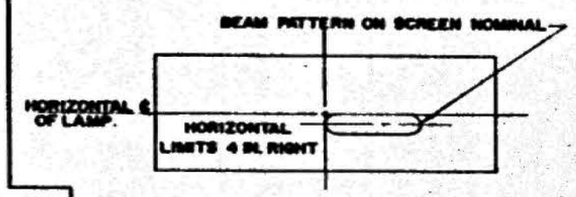

GAS TANK EMPTY - TOP OF HOT SPOT 1.00 BELOW HORIZONTAL ℄ TO 1.00 ABOVE.

GAS TANK FULL - TOP OF HOT SPOT AT HORIZONTAL ℄ TO 2.00 ABOVE.

FOR LOWER BEAM
TWO FILAMENT UNIT

FACTORY INSPECTION TOLERANCES ARE AS FOLLOWS WHEN T3 AIMER IS USED TO SET HEAD LAMPS. CHECK ON SCREEN AT 25 FT.

TYPE 1 LAMP - ℄ HOT SPOT 2" BELOW HORIZONTAL ± 2.00"
LATERAL AIM - ℄ HOT SPOT ON VERTICAL ℄ ± 4.00

TYPE 2 LAMP - LOWER BEAM - TOP EDGE OF HOT SPOT AT HORIZONTAL ℄ ± 2.00"
LATERAL AIM - LEFT EDGE OF HOT SPOT 2" TO RIGHT OF VERTICAL ℄.
LIMITS - VERTICAL TO 4" TO RIGHT.

CAR MUST BE POSITIONED ON LEVEL SURFACE WITH GAS TANK EMPTY (0 TO 4 GALLONS)

DATE	REV.	REVISED DRAWN	APPROVED		
6-9-65	A	NOT REVISED		DS	LG
6-9-65	B	VIEW REMOVED		DS	LG

OLDSMOBILE DIVISION
GENERAL MOTORS CORPORATION
LANSING, MICHIGAN

NO. 387899
SHEET OF
LAST CHANGE B

TOLERANCES UNLESS OTHERWISE SPECIFIED ± .02 ALLOWED ON TWO PLACE DECIMALS ± .010 ALLOWED ON THREE PLACE DECIMALS
ON ALL CASTINGS AND FORGINGS ALLOW FOR FINISH AS FOLLOWS F1, .030 F2, .06 F3, .12 ETC.
COMMERCIAL TOLERANCES APPLY TO SHEET METAL GASKETS, TUBING, ROLLED, DRAWN OR EXTRUDED SECTIONS & STANDARD PARTS

DO NOT SCALE

DATE FEB 7, 1964 — MATERIAL
SCALE — DR. [illegible]
TRACE DATE 10-65 — DATE
REFERENCE — DATE
MATERIAL SPEC. — DATE

NAME: CHART - HEADLAMP FOCUS

SIZE B — PART NO. 387899

387899 B

F-85 MODELS

(1) THE FOLLOWING TABLE SHOWS THE AMOUNT OF INHIBITED ETHYLENE GLYCOL COOLANT REQUIRED TO GIVE A 44% SOLUTION BY VOLUME.

MODELS	FREEZING POINT	PERCENT SOLUTION BY VOLUME	QUANTITY OF COOLANT SOLUTION WITHOUT HEATER	WITH HEATER
ALL V8 EXC. AIR COND. & 35V01	-20° F.	44.0	7.13 QTS.	7.43 QTS.
ALL V8 AIR COND. (INCL. 35V01)	-20° F.	44.0	8.18 QTS.	8.50 QTS.
ALL V6 EXC. A/C	-20° F.	44.0	4.40 QTS.	4.71 QTS.
ALL V6 A/C	-20° F.	44.0	4.62 QTS.	4.93 QTS.

TOTAL COOLING SYSTEM CAPACITY

MODELS	WITHOUT HEATER	WITH HEATER
ALL V8 EXC. AIR COND. EXC. 35V01	16.2 QTS.	16.9 QTS.
ALL V8 AIR COND. (INCL. 35V01)	18.6 QTS.	19.3 QTS.
ALL V6 EXC. A/C	10.0 QTS.	10.7 QTS.
ALL V6 A/C	10.5 QTS.	11.2 QTS.

NOTE: METHANOL TYPE ANTI-FREEZE OR WATER ARE NOT TO BE USED UNDER ANY CONDITION. ALL F-85 SERIES MUST BE PROTECTED AS SHOWN ABOVE WITH ETHYLENE GLYCOL TYPE COOLANT. NO DEVIATION PERMITTED BY ANY PLANT OR ZONE FOR CLIMATIC CONDITIONS.

(2) GENERAL
CAUTION: SOLUTION MUST BE HELD .80" BELOW CENTER OF FILLER NECK-SEAT TO PREVENT LEAKAGE DURING TRANSPORATION AND LOSS OF COOLANT DURING OPERATION. THIS .80" LEVEL IS MEASURED WITH COOLANT AT ROOM TEMPERATURE TO ALLOW EXPANSION VOLUME OF COOLANT UNDER OPERATING CONDITIONS. EXTREME CARE MUST BE TAKEN IN FILLING COOLING SYSTEM TO PREVENT DAMAGE OF CAR FINISH.
NOTE: COOLING SYSTEM OPERATING CAPACITY (COOLANT AT ROOM TEMPERATURE FILLED TO .80" BELOW CENTER OF FILLER NECK SEAT) (TOP TANK COOLANT AT 156°. FILLED TO .20" BELOW CENTER OF FILLER NECK SEAT).

BIG CAR MODELS

(1) THE FOLLOWING TABLE SHOWS THE AMOUNT OF INHIBITED ETHYLENE GLYCOL COOLANT REQUIRED TO GIVE A 44% SOLUTION BY VOLUME.

MODELS	FREEZING POINT	PERCENT SOLUTION BY VOLUME	QUANTITY OF COOLANT SOLUTION WITHOUT HEATER	WITH HEATER
ALL 5200 EXC. A/C	-20° F.	44.0	6.83 QTS.	7.25 QTS.
ALL 5200 A/C	-20° F.	44.0		7.50 QTS.
ALL EXC. AIR COND.	-20° F.	44.0	7.25 QTS.	7.70 QTS.
ALL AIR COND. & 35Y76 SPECIAL DUTY COOLING	-20° F.	44.0		7.82 QTS.

TOTAL COOLING SYSTEM CAPACITY

MODELS	WITHOUT HEATER	WITH HEATER
ALL 5200 EXC. A/C	15.5 QTS.	16.5 QTS.
ALL 5200 A/C		17.0 QTS.
ALL EXC. AIR COND.	16.5 QTS.	17.5 QTS.
ALL AIR COND. & 35Y76 SPECIAL DUTY COOLING		18.0 QTS.

(2) GENERAL
CAUTION: SOLUTION LEVEL MUST BE HELD TO "FILL COLD" MARK TO PREVENT LEAKAGE DURING TRANSPORTATION AND LOSS OF COOLANT DURING OPERATION. THIS LEVEL IS MEASURED WITH COOLANT AT ROOM TEMPERATURE TO ALLOW EXPANSION VOLUME OF COOLANT UNDER OPERATION CONDITIONS. EXTREME CARE MUST BE TAKEN IN FILLING COOLING SYSTEM TO PREVENT DAMAGE TO CAR FINISH.

NOTE: UNION CARBIDE MATERIAL IS APPROVED FOR B/C BODY USAGE ONLY. "A" BODY PENDING V6 BUICK APPROVAL.

NOTE: COOLING SYSTEM OPERATION CAPACITY (COOLANT AT ROOM TEMPERATURE) FILLED TO "FILL COLD" MARK.

F-85 & BIG CAR MODELS

APPROVED SOURCES & MATERIALS:

WYANDOTTE CHEMICAL	SINGLE PHASE U-2407-CW
UNION CARBIDE	G300-B/C ONLY - PENDING FOR F-85
JEFFERSON CHEMICAL	JC57 (D)
DUPONT	M29
OLIN-MATHIESON	OM-91D
DOW CHEMICAL	D-566-100
WYANDOTTE	U-3034 CW
DOW CHEMICAL	725
MINERAL INDUSTRIES, INC.	#101
HOUSTON CHEMICAL CORP.	#700-BC-20

RADIATOR COOLANT REQUIREMENTS:

ETHYLENE GLYCOL TWO YEAR COOLANT MEETING SPECIFICATION 9985012 MANDATORY IN ALL SERIES YEAR AROUND TO PROVIDE AN INHIBITED COOLANT IN THE AMOUNTS TABULATED.

A TAG MUST BE ATTACHED TO THE RADIATOR UPPER TIE BAR SHOWING TYPE OF COOLANT INSTALLED. TAG 384954 (YELLOW).

PRODUCTION SAMPLE TO BE TESTED AND APPROVED BY PRODUCT ENGINEERING FOR OLDSMOBILE PARTS.

DATE	SYM	REVISION	DR.	CK.	DATE	SYM	REVISION	DR.	CK.	DATE	SYM	REVISION	DR.	CK.
										10-15-64	C	WAS JC30 INFORMATION MODEL	GG	LA
										8-25-64	C	FOR MAT REVISED & FOR:	LM	N

CHART-INHIBITED YEAR AROUND COOLANT

DATE MAY 23 1964
DR. BY M.J. MARTIN
CHECKED
APPR.
APPR.

FIRST USED 1965

Oldsmobile Graphic Illustration

SERIES BIG CAR & F-85

REV.

PAGE C-4.1*

PART NO. 389390

OLDSMOBILE DIVISION GENERAL MOTORS CORPORATION LANSING 21, MICHIGAN

G.M. MATERIAL SPEC.	QUANTITY	DESCRIPTION	USAGE	APPROVED SOURCES (APPROVED MAKE ONLY MUST BE USED)
9981117		SILICONE LUBE	1. APPLY TO ACCELERATOR PEDAL HOLES PRIOR TO ASSEMBLY TO STUDS. 2. APPLY TO TRANSMISSION OIL INDICATOR RUBBER SEAL PRIOR TO ASSEMBLY OF INDICATOR TO FILLER TUBE.	HOWARD PROD. CO. HP-LE-41
(T)				
9985002		ENGINE OIL	1. APPLY TO ALL FRICTION & BEARING SURFACES ON THE THROTTLE CONTROL.	
9985113	2.00 PINTS 3.08 PINTS 2.25 PINTS	OIL - S.M.	1. FILL THRU FILLER PLUG OF S.M. TRANSMISSION (33-34-35-36-38-52). 2. FILL THRU FILLER PLUG OF S.M. TRANSMISSION (54-56-58). 3. FILL THRU FILLER PLUG OF F.S. TRANSMISSION (ALL SERIES).	SUN OIL - 5113 SOCONY-MOBIL #56952-5
9985055	3.00 PINTS	OIL-DIFFERENTIAL	1. FILL, FOR ALL STANDARD DIFFERENTIALS, TO BOTTOM OF FILLER PLUG HOLE (33-34-35-36-38).	1. THE TEXAS COMPANY 2. STUART OIL COMPANY
9985026	6.00 PINTS 11.70 PINTS	HYDRA-MATIC FLUID	1. FILL FOR J.T. TRANSMISSION-THROUGH FILLER TUBE. APPROXIMATELY 13.00 PINTS FURNISHED IN TRANSMISSION AS PURCHASED-TOTAL USAGE 19.00 PINTS-SEE DRAWING 388444 FOR FILL SPECIFICATIONS (33-34-35-36-38-52). 2. LUBRICATE SPEEDOMETER DRIVEN GEAR SHAFT & SEAL AT ASSEMBLY (33-34-35-36-38). 3. FILL FOR H.T. TRANSMISSION-THROUGH FILLER TUBE. APPROXIMATELY 10.8 PINTS FURNISHED IN TRANSMISSION AS PURCHASED - TOTAL USAGE 22.50 PINTS SEE DRAWING 388444 FOR FILL SPECIFICATIONS (54-56-58-66-84-86).	1. THE TEXAS COMPANY - TL-3528A 2. CITIES SERVICE CSR-184A 3. SUN OIL - 302903 (U) 4. CITIES SERVICE CSR-1-26A
9985035	3.00 PINTS 4.63 PINTS	OIL-DIFFERENTIAL	1. FILL THRU FILLER PLUG TO BOTTOM OF FILLER PLUG HOLE ON ALL LOCKING TYPE DIFFERENTIALS (33-34-35-36-38-52). 2. FILL THRU FILLER PLUG TO BOTTOM OF FILLER PLUG HOLE ON ALL STANDARD DIFFERENTIALS (5200). 3. FILL THRU FILLER PLUG TO BOTTOM OF FILLER PLUG HOLE ON ALL LOCKING TYPE & STANDARD (R) DIFFERENTIALS (54-56-58-66-84-86).	THE TEXAS COMPANY TL-3450
9985038		EXTREME PRESSURE GREASE	1. APPLY TO ALL FRICTION & BEARING SURFACES OF SHIFT CONTROL LINKAGE. 2. APPLY TO ALL FRICTION & BEARING SURFACES OF CLUTCH CONTROL LINKAGE. 3. APPLY TO CLUTCH PEDAL PIVOT AND PUSH ROD END PRIOR TO ASSEMBLY (33-34-35-36-38-52). 4. APPLY TO CLUTCH EQUALIZER AT ASSEMBLY. 5. APPLY TO PORTION OF SHIFT LEVER AND SPRING IN SHIFT BOWL. 6. APPLY TO BALL SOCKET OF CARBURETOR LEVER ROD. 7. APPLY TO FRONT & REAR THROTTLE LEVER BEARINGS PRIOR TO ASSEMBLY TO BODY. 8. APPLY TO CLUTCH PEDAL PIVOT BEARINGS AND PUSH ROD END PRIOR TO ASSEMBLY.	HUMBLE ESSO WS 3794 GREASE
9985092		LITHIUM-MAHOGANY SOAP GREASE	1. APPLY TO INNER & OUTER LIPS OF S.M. & F.S. TRANSMISSION REAR OIL SEAL BEFORE ASSEMBLY OF PROPELLER SHAFT.	STANDARD OIL INDIANA G6466
N.P.N.	.0802 OZ.	HIGH TEMP. GREASE	1. FILL RECESS ON I.D. OF CLUTCH RELEASE BEARING. 2. APPLY ON CLUTCH CONTROL THROWOUT YOKE BALL STUD.	TEXACO NO. 1999
(S)				

DATE	SYM	REVISION	DR.	CK.	DATE	SYM	REVISION	DR.	CK.	DATE	SYM	REVISION	DR.	CK.
										2-6-65	U	CITIES SER. CSR-1-26A ADDED	JC	JP
										12-1-64	T	9985000 REMOVED	JC	JP
										10-1-64	S	9985055 REMOVED	JC	JP
										12-1-64	R	STANDARD DIFF. ADDED	JC	JP

CHART LUBRICANTS & PROCESS MATERIALS-TRANS.

DATE FEB 19, 1964 | DR. BY J. PERKINS | CHECKED W.L. WEISS | APPR. H.L. HOWARD | APPR.

FIRST USED 1965 | SERIES ALL | REV. | Oldsmobile GRAPHIC ILLUSTRATION | PAGE C-5.1 | PART NO. 388597

OLDSMOBILE DIVISION GENERAL MOTORS CORPORATION LANSING 21, MICHIGAN

G.M. SPEC. NUMBER	QUANTITY	DESCRIPTION	USAGE	APPROVED SOURCE
**9985000	.01 #	SEALER	1. APPLY ADEQUATELY & EVENLY TO 360° OF AXLE SHAFT OIL SEAL. OD.	
9985005	*	LUBRICANT	1. APPLY TO TIRE BEAD & VALVE STEM	
**9985008	*	LUBRICANT	1. APPLY TO HORN CONTACT	
9985010	1.13 QTS.	POWER STEERING FLUID	1. POWER STEERING FILL - FILL RESERVOIR TO BOTTOM OF FILLER NECK WHEN COLD (TO LEVEL MARK WHEN WARM ± 1/2 INCH) - SEE CHART #380103 FOR FILL PROCEDURE	
9985013	.62 PINTS	BRAKE FLUID	1. BRAKE SYSTEM FILL - FILL RESERVOIR TO 1/4 ± 1/8 INCH FROM TOP	
9985015	4 GAL. MINIMUM	GASOLINE (PREMIUM GRADE) (V)	1. FUEL TANK - INCREASE AMOUNT IF NECESSARY TO DELIVER CAR	
9985020	*	SEALER	1. EXHAUST SYSTEM - ALL CLAMPED JOINTS	
**9985035		HYPOID GEAR LUBRICANT	1. APPLY ON REAR SHAFT BEARING O. D.	
9985038	*	LUBRICANT	1. BRAKE-PUSH ROD CLEVIS PIN	
9985054	14 FT.	16 PLY COTTON TWINE WITHOUT KNOTS	1. PACKAGING - WHEEL DISC & HUB CAPS	
9985092	.04 #	LUBRICANT	(U) 1. SLIP YOKE (TRANSMISSION END) H. M. T. 35200, 54, 56, 58, 66, 84, & 86	
386986	1	CARDBOARD PROTECTOR	1. PACKAGING - WHEEL DISCS & HUB CAPS	
**3510 M	*	1/8 DIA. MILD STEEL WELDING WIRE	1. REAR AXLE TUBE TO DIFFERENTIAL CARRIER, SPRING SEATS & SHOCK ABSORBER BRACKETS TO REAR AXLE TUBES	
**3524	*	WELDING ROD	1. REAR AXLE REPAIRS	
** N.P.N. ** N.P.N. ** N.P.N.	.125 # * *	HIGH TEMPERATURE GREASE	1. APPLIED BY MACHINE TO FRONT HUB WHEEL BEARINGS 2. APPLIED BY MACHINE TO FRONT HUB OIL SEAL (NOT SATURATED BUT SLIGHTLY LUBRICATED) 3. POLYURETHANE SEALS TO STEERING SHAFT	TEXAS CO. #1999
** N.P.N.	*	LUBRICANT	1. STEERING COLUMN ASSEMBLY	AMERICAN CHAIN AND CABLE #RA-3747 OR SOUTHWEST GREASE AND OIL #5528
9780617	.016 OZ	LUBRICANT	1. RUBBER SLEEVE TO STRG COL JACKET	
9985120	.08 #	SOLDER - (35% TIN - 65% LEAD #66 OR 3.6% ROSIN BY WEIGHT	1. FUEL TANK - FILLER NECK & VENT PIPE	KESTER, NATIONAL, ALPHA
** N.P.N.	*	LIQUID FLUX	1. FUEL TANK - FILLER NECK & VENT PIPE	KESTER (LIQUID ROSINFLUX #1544)
N.P.N.	1	MULT-POUCH PAPER BAG	1. PACKAGING - CUSTOM COVER CAP ASSEMBLY	
9985112	*	CEMENT	1. BRAKE-PEDAL ARM BUSHING (BIG CAR ONLY)	GOODYEAR (PLIOBOND #CA 468)
N.P.N.	*	BUNA "N" NITRILA SEALER (W)	1. APPLY TO THE INBOARD SIDE OF THE REAR BRAKE BACKING PLATE IN THE AREA OF THE GASKET SURFACE OF THE AXLE HOUSING. F-85 & 5200	MINNESOTA MINING EC2115

* QUANTITY TO BE DETERMINED ** LANSING PART ONLY

DATE	SYM	REVISION	DR.	CK.
6-8-65	W	SEALER ADDED		
4-27-65	V	FUEL REQ'MT REVISED		
2-8-65	U	5200 SERIES ADDED		

CHART LUBRICANTS & PROCESS MATERIALS-CHASSIS

DATE MARCH 25, 1964
DR. BY JACQUI PERKINS
CHECKED M. ESCH
APPR. T. R. FERNAND
APPR. H. M. OLDS

FIRST USED 1965

Oldsmobile Divisions ILLUSTRATION

SERIES ALL

REF. GRP 10-CHASSIS

PAGE C-5.2*

PART NO. 388706

OLDSMOBILE DIVISION GENERAL MOTORS CORPORATION LANSING 21, MICHIGAN

G.M. SPEC. NUMBER	QUANTITY	DESCRIPTION	USAGE	APPROVED SOURCES
(L) 9980638	•	SEALER	1. BLOWER AIR INLET TO DASH	
(H) 9985062		CEMENT - MUST BE SPRAYED & INSTALLED IMMEDIATELY	1. INSULATOR TO HOOD	(J)
9981041	•	SEALER	1. AROUND TRUNK RELEASE VACUUM HOSE AND/OR HEATER BLOWER WIRE GROMMET 2. AROUND AND OVER A-C WIRING AND HOSE GROMMET IN DASH 3. FUSE BLOCK SCREWS 4. AROUND ACCESSORY WIRE GROMMET 5. PARKING BRAKE NUTS 6. SPEEDO CABLE GROMMET 7. VACUUM TANK SCREWS (K) 8. PARKING BRAKE CABLE AT FLOOR PAN	
9981074	•	SEALER	1. HEATER COVER PLATE TO DASH 2. BLOWER COVER PLATE TO DASH	
9981117	•	SILICONE LUBRICANT	1. HOOD BUMPERS AND LACING	
9981192	•	CEMENT	1. CARPET TO CONSOLE BODY 2. RADIO SPEAKER GASKET TO PLATE	
9985008	•	LUBRICANT-ZINC OXIDE (WHITE)	1. HOOD LATCH MECHANISM 2. ASH TRAY DOOR DETENT CONTACT SURFACE ON INSTRUMENT PANEL 3. DOOR WEDGE PLATES (CONV. STYLES) BEFORE SHIPMENT	
9985014	•	SOLUBLE OIL - TO BECOME EFFECTIVE 30 DAYS AFTER START OF PRODUCTION & TERMINATED APRIL 30 AT ALL PLANTS EXCEPT ATLANTA & ARLINGTON.	1. BUMPERS - FRONT AND REAR 2. RADIATOR GRILLE 3. HEADLAMP DOORS 4. TAIL LAMP BEZELS 5. WHEEL HOUSE MOULDINGS 6. ROCKER PANEL MOULDINGS	PILLSBURY #G-65
(L)	24"	TAPE-MASKING (1.00 WIDE)	1. SEAT PROTECTIVE COVER TO SEAT (CLOTH & WHITE VINYL)	(M) ARNO C505 OR EQUIVALENT
9985017	2±.25 OZ. OR .29 GAL. PER 100 GAL. OF COOLANT	OIL-SOLUBLE (RADIATOR)	1. RADIATOR ASSEMBLY	
9985021	•	MASTIC	1. HOOD ASSEMBLY-BONDING INNER PANEL TO OUTER PANEL	
9985027	•	CEMENT	1. RUBBER FILLERS-REAR BUMPERS	
9985002	•	LUBRICANT-SAE #40 OIL	1. HOOD HINGE JOINTS AND GEARS (PRIOR TO ASSEMBLY)	
9985022	•	PROTECT-O-FILM	1. APPLY TO ALL EXTERIOR HORIZONTAL SURFACES ONLY. USED ON ALL CARS TO PROTECT FINISH DURING SHIPMENT & STORAGE. TO BECOME EFFECTIVE 30 DAYS AFTER START OF PRODUCTION.	DUPONT NO'S: - VW1315, VW1317, VW1324 & VW1311 OR VW1330 (HIGH FLASH POINT) OR PONTIAC VARNISH CO. GMP #180-B.
9985012	SEE 389390 COOLANT CHART, PAGE C-4.1	COOLANT-ETHYLENE GLYCOL INHIBITED	1. RADIATOR ASSEMBLY	
9985016	3 LBS. 8 OZ. .5 LB.	REFRIGERANT 12	1. FOR CHARGING A-C SYSTEM 2. FOR PROCESSING	
9985006	1 OZ.	FRIGIDAIRE OIL TYPE "A" 525 VISCOSITY - PURCHASE IN BULK IN 55 GALLON DRUM	1. FOR LOSSES & REPAIR DURING ASSEMBLY & TESTING	
9985042	•	CEMENT-CYCOLAC	1. AIR CONDITIONER OUTLET ASSEMBLIES	
(N)				
	2"	TAPE-PAPER MASKING 1/2" WIDE	1. HEATER HARNESS	
9985047	SEE 380221 SOLUTION CHART, PAGE C-2.1	SOLVENT WINDSHIELD WASHER	1. IN WINDSHIELD WASHER SYSTEM	

• QUANTITY TO BE DETERMINED

DATE	SYM	REVISION	DR.	CK.	DATE	SYM	REVISION	DR.	CK.
					4-24-67	N	9985019 REMOVED	JNCP	
					4-24-67	M	SOURCE ADDED	JNCP	

CHART LUBRICANTS & PROCESS MATERIAL

DATE
DR. BY JACQUI PERKINS
CHECKED M. D. TUTTLE
APPR. H. T. THAMAN
APPR.

FIRST USED 1965

Oldsmobile GRAPHIC ILLUSTRATION

SERIES F-85

REF. GRP "O" BODY

PAGE C-5.3

PART NO. 387892

OLDSMOBILE DIVISION
GENERAL MOTORS CORPORATION
LANSING, MICHIGAN

SAFETY CHECK

1. MAKE SURE NEUTRAL SAFETY SWITCH IS CORRECTLY ADJUSTED SO CAR DOES NOT START IN REVERSE OR DRIVE.
2. MAKE SURE SHIFT LINKAGE IS CORRECTLY ADJUSTED SO THAT COLUMN STOPS DO NOT INTERFERE WITH THE TRANSMISSION QUADRANT DETENTS IN NEUTRAL AND DRIVE.

IMPORTANT

1. DO NOT EXCEED 1/2 THROTTLE OPERATION, EXCEPT ON MAKING A DOWNSHIFT
2. DO NOT EXCEED 60 MPH.
3. DO NOT SHIFT TO PARK OR REVERSE WITH ROLLS TURNING
4. IF CAR HAS EXCESSIVE CREEP, CHECK IDLE RPM AND PROPER VARIABLE STATOR FUNCTION AT IDLE.
5. CHECK FOR GEAR NOISE LEVEL DURING FUNCTIONAL CHECKS IN NEUTRAL, LOW AND REVERSE.

CHECKS AND PROCEDURE

1. MAKE LIGHT THROTTLE START & OBSERVE UPSHIFT AT 20-30 MPH.
2. OPEN THROTTLE TO DETENT AND OBSERVE FOR VARIABLE STATOR FUNCTION.
3. OPEN THROTTLE THRU DETENT AND OBSERVE FOR DOWNSHIFT FUNCTION.
4. BACK OFF ON THROTTLE AND OBSERVE UPSHIFT AT 50-60 MPH.
5. COAST DOWN TO 45-40 MPH, SHIFT TO LOW RANGE AND OBSERVE SHIFT..
6. STOP WHEELS, SHIFT TO REVERSE AND ACCELERATE LIGHTLY.
7. CHECK OPERATION OF PARKING PAWL ON 10% GRADE OR EQUIVALENT. SHOULD ENGAGE AND RELEASE FREELY WITHOUT RATCHETING.

C-6.1*

LAST CHANGE A

384690

DATE	SYM.	REVISION RECORD	AUTHORITY	DR.	CK.
2/5/64	A	REVISED & REPTYED	PAHT	JP	
	B				

TOLERANCES UNLESS OTHERWISE SPECIFIED ± .02 ALLOWED ON TWO PLACE DECIMALS ± .010 ALLOWED ON THREE PLACE DECIMALS.
ON ALL CASTINGS AND FORGINGS ALLOW FOR FINISH AS FOLLOWS: F/F-.005; F/F-.00; F/F-.00; F/F-.12; ETC.
COMMERCIAL TOLERANCES APPLY TO SHEET METAL GAUGES, TUBING, ROLLED, DRAWN OR EXTRUDED SECTIONS AND STANDARD PARTS.

DO NOT SCALE

DATE MAY 28, 1963	DR. DEANNA SCHMIDT
SCALE	CK. W.L. WEISS
FIRST USED 1964	APPR. H.L. Howard
	APPR.
REFERENCE	APPR.
MATERIAL SPEC.	

NAME CHART ROLL TEST PROCEDURE

T

PART NO. 384690

A

DD

R. CARROLL, INC. 50007-

OLDSMOBILE DIVISION
GENERAL MOTORS CORPORATION
LANSING, MICHIGAN

SAFETY CHECK

1. MAKE SURE NEUTRAL SAFETY SWITCH IS CORRECTLY ADJUSTED SO CAR DOES NOT START IN REVERSE OR DRIVE.
2. MAKE SURE SHIFT LINKAGE IS CORRECTLY ADJUSTED SO THAT COLUMN STOPS DO NOT INTERFERE WITH THE TRANSMISSION QUADRANT DETENTS IN NEUTRAL AND DRIVE.

IMPORTANT

1. DO NOT EXCEED 1/2 THROTTLE OPERATION, EXCEPT ON MAKING A DOWNSHIFT.
2. DO NOT EXCEED 60 MPH.
3. DO NOT SHIFT TO PARK OR REVERSE WITH ROLLS TURNING.
4. IF CAR HAS EXCESSIVE CREEP, CHECK IDLE RPM AND PROPER VARIABLE STATOR FUNCTION AT IDLE.
5. CHECK FOR GEAR NOISE LEVEL DURING FUNCTIONAL CHECKS IN DRIVE, LOW AND REVERSE.

CHECKS AND PROCEDURE

1. MAKE LIGHT THROTTLE START & OBSERVE THE 1-2 UPSHIFT AT 15-20 MPH. AND THE 2-3 UPSHIFT AT 25-35 MPH. (THESE SHOULD OCCUR AT APPROXIMATELY THE SAME THROTTLE OPENING.)
2. OPEN THROTTLE TO DETENT AND OBSERVE FOR VARIABLE STATOR FUNCTION.
3. OPEN THROTTLE THRU DETENT AND OBSERVE FOR DOWNSHIFT FUNCTION.
4. BACK OFF ON THROTTLE AND OBSERVE UPSHIFT AT 50-60 MPH.
5. COAST DOWN TO 50 MPH., SHIFT TO "SUPER" RANGE AND OBSERVE SHIFT - WHEN TRANSMISSION HAS SHIFTED COMPLETELY INTO SECOND GEAR, SHIFT TO LOW RANGE AND OBSERVE SHIFT.
6. STOP WHEELS, SHIFT TO REVERSE AND ACCELERATE LIGHTLY.
7. CHECK OPERATION OF PARKING PAWL ON 10% GRADE OR EQUIVALENT - SHOULD ENGAGE AND RELEASE FREELY WITHOUT RATCHETING.

DATE	SYM.	REVISION RECORD	AUTHORITY	DR.	CK.

TOLERANCES UNLESS OTHERWISE SPECIFIED ± .02 ALLOWED ON TWO PLACE DECIMALS ± .010 ALLOWED ON THREE PLACE DECIMALS.

ON ALL CASTINGS AND FORGINGS ALLOW FOR FINISH AS FOLLOWS F_1=.030; F_2=.06; F_3=.09; F_4=.12; ETC.

COMMERCIAL TOLERANCES APPLY TO SHEET METAL GAUGES, TUBING, ROLLED, DRAWN OR EXTRUDED SECTIONS AND STANDARD PARTS.

DO NOT SCALE

DRG. DATE FEBRUARY 5, 1964	DR. JACQUI PERKINS
SCALE	CK. W.L. WEISS
FIRST USED 1965	APPR. H.E. Kenwald
	APPR.
REFERENCE	APPR.
MATERIAL SPEC.	
NAME CHART - ROLL TEST PROCEDURE	
T	PART NO. 387852

LAST CHANGE

387852

C-6.2

60.0

50-54-58-66-80-84

OLDSMOBILE

TORQUE RANGE LB. FT.

PART NO.	DESCRIPTION	MATERIAL	SPECIFICATION	FAILURE RANGE	APPLICATION
9421455-N	#4-40	GM-284M	2.00-5.00 (LB. IN.)		SLOW IDLE SWITCH TO LEVER (JT V6)
162396 SCREW	#8-15 x 1/2	STEEL	12-18 (LB. IN.)		(J) SEAL AND RETAINER TO FLOOR (SM-FL-SHIFT, FS) (SM-FL-SHIFT)(3427, 69-3669-3827, 37, 67)
427721 SCREW	#8-32 x 3/16	GM-280M	12-18 (LB. IN.)		SHIFT INDICATOR CLAMPING (JT)
3837950 SCREW	#10-16 X 5/16	STEEL	36-60 (LB. IN.)		THROTTLE SWITCH CABLE ASSEMBLY CLIP TO TRANSMISSION (JT)
3837950 SCREW	#10-16 X 5/16	STEEL	36-60 (LB. IN.)		BACK-UP LAMP SWITCH TO COLUMN (SM)
3837950 SCREW	#10-16 x 5/16	STEEL	36-60 (LB. IN.)		NEUTRAL SAFETY SWITCH TO STEERING COLUMN (JT)
9419303 SCREW	#10-16 x 1/2	GM-6010M	36-60 (LB. IN.)		NEUTRAL SAFETY & BACK-UP LAMP SWITCH TO BRACKET (JT-3527, 3827, 3837, 3867)
9419321 SCREW	#10-16 x 5/8	GM-6010M	36-60 (LB. IN.)		SHIFT LEVER BRACKET TO BODY (JT-3527, 3837, 3867)
9418143 SCREW	#10-24 x 5/8	SAE #1010 OR #1020	24-48 (LB. IN.)		INTERMEDIATE ROLLER TO THROTTLE OPERATING LEVER (V6) (REF)
140879 SCREW	#10-32 x 3/16	STEEL	24-27 (LB. IN.)		HANDLE TO SHIFT LEVER (JT-3527, 3827, 3837, 3867)
140879 SCREW	#10-32 x 3/16	STEEL	3.00-3.96 (LB. IN.)		R. H. BUTTON TO SHIFT LEVER HANDLE (JT-3257, 3827, 3837, 3867)
423595 SCREW	#10-24 x 1/2	SAE #1010 OR #1020	12-18 (LB. IN.)		BACK-UP LAMP SWITCH TO BRACKET (FS)
115295-N	#10-32	GM-284M	24-27 (LB. IN.)		SHIFT LEVER HANDLE L. H. BUTTON ASSEMBLY PLUNGER (JT-3527, 3827, 3837, 3867)
120614-N	#10-32	GM-284M	24-27 (LB. IN.)		CARBURETOR LEVER TO THROTTLE SWITCH LINK (JT-V6) (REF)
425217 CONNECTOR	1/8-27 DRYSEAL PIPE THREAD	STEEL	72-108 (LB. IN.)		MODULATOR VALVE PIPE TO INTAKE MANIFOLD (JT)
9419400 SCREW	1/4-14 x 1/2	SAE #1008 OR #1010	96-144 (LB. IN.)		CLIP-THROTTLE RETURN SPRING TO DASH (V6) (REF)
9419400 SCREW	1/4-14 x 1/2	SAE #1018 OR #1022	96-144 (LB. IN.)		CONVERTER PAN TO TRANSMISSION (JT)
9419727 SCREW	1/4-14 x 5/8	SAE #1008 OR #1010	72-94 (LB. IN.)		CLAMP OIL COOLER PIPES TO FRAME (JT)
9419727 SCREW	1/4-14 x 5/8	SAE #1008 OR #1010	72-94 (LB. IN.)		SHIFT LEVER BRACKET TO BODY (JT-3527, 3827, 3837, 3867)
9419727 SCREW	1/4-14 x 5/8	SAE #1008 OR #1010	72-94 (LB. IN.)		THROTTLE SWITCH ASSEMBLY TO BRACKET (JT-V8) (SM-V8)
(K) 9419727 SCREW	1/4-14 x 5/8	SAE #1008 OR #1010	72-94 (LB. IN.)		ACCELERATOR PEDAL ROD AND BRACKET ASSEMBLY TO DASH (JT-V8) (SM-V8)
(K) 9423329 SCREW	1/4-14 x 5/8 B. S. D.	GM-6010M	72-94 (LB. IN.)		ACCELERATOR PEDAL ROD AND BRACKET ASSEMBLY TO DASH (JT-V8) (SM-V8)
(L)					
(L)					
9409107 SCREW	1/4-20 x 5/8	SAE #1010 OR #1020	48-84 (LB. IN.)	93.6-139.2 (LB. IN.)	LOCK PLATE TO REAR BEARING RETAINER (SM, SM-FL-SHIFT, FS)
1365088 STUD	1/4-20 SPECIAL	SAE #1112	108-156 (LB. IN.)		ACCELERATOR PEDAL STUD TO PLATE

SHEET 1 OF 3

DATE	SYM	REVISION	DR.	CK.	DATE	SYM	REVISION	DR.	CK.	DATE	SYM	REVISION	DR.	CK.
					4-9-65	K	PART ADDED.			9-24-64	E	187343 REMOVED		
					1-26-65	J	USAGE REVISED			9-24-64	D	143337 REMOVED		
					1-28-65	H	STEEL SPEC. ADDED			8-7-64	C	9419400 WAS 1361748		
					1-4-65	G	WAS 9419319			8-7-64	B	423596 WAS 9420606		
1-28-65	L	LINE REMOVED			12-21-64	F	REVISED & REDRAWN			8-7-64	A	REVISED & REDRAWN		

CHART – WRENCH TORQUE (TRANSMISSION)

DATE MARCH 18, 1964
DR. BY JACQUI PERKINS
CHECKED W. L. WEISS
APPR.
APPR.

FIRST USED 1965
DESIGN F-85
REF.
ILLUSTRATION
PAGE C-8.1
PART NO. 388433

TORQUE RANGE LB. FT.

PART NO.	DESCRIPTION	MATERIAL	SPECIFICATION	FAILURE RANGE	APPLICATION
9419143-N	1/4-20	GM-286M	48-84 (LB. IN.)		SWITCH LEVER TO SHIFT LEVER (JT-3527, 3827, 3837, 3867)
9419143-N	1/4-20	GM-286M	48-84 (LB. IN.)		SWITCH BRACKET TO SHIFT BRACKET (JT-3527, 3827, 3837, 3867)
9419143-N	1/4-20	GM-286M	48-84 (LB. IN.)		GUIDE TO SHIFT LEVER (JT-3527, 3827, 3837, 3867)
9419143-N	1/4-20	GM-286M	48-84 (LB. IN.)		INDEX PLATE TO SHIFT BRACKET (JT-3527, 3827, 3837, 3867)
9421824-B	1/4-28 x 7/16	GM-260M	48-72 (LB. IN.)	112.8-165.6 (LB. IN.)	DASHPOT BRACKET TO CARBURETOR (JT) (V8 4 BARREL)
115802-N	1/4-28	GM-286M	48-72 (LB. IN.)	112.8-165.6 (LB. IN.)	CLEVIS ASSEMBLY TO THROTTLE OPERATING ROD ASSEMBLY (V6) (REF.)
9421083-N	1/4-28	GM-286M	48-72 (LB. IN.)	112.8-165.6 (LB. IN.)	ROD ASSEMBLY TO CARBURETOR LEVER (V8)
1367657 SCREW	5/16-18 X 1/2	STEEL	17-23		SHIFT EQUALIZER TO SWIVEL (JT) EXC. 3527, 3857, 3867)
106973-B	5/16-18 x 1/2	GM-260M	14-17	18.7-27.7	COVER TO HOUSING (V6 & V8) (SM, SM-FL-SHIFT, FS)
9418829-B	5/16-18 x 9/16	GM-280M	14-17	18.7-27.7	DASHPOT BRACKET TO MANIFOLD (JT) (V8 2 BARREL)
115658-B	5/16-18 x 9/16	GM-260M	96-192 (LB. IN.)		LOCK PLATE TO REAR BEARING RETAINER (JT)
9419853-B	5/16-18 x 5/8	GM-260M	108-156 (LB. IN.)		DASHPOT BRACKET TO MANIFOLD (JT V6) (REF)
9421822 SCREW	5/16-18 x 5/8	STEEL	18-24 (LB. IN.)		SHIFT KNOB LOCK SCREW (FS EXC D55) (FS EXC W29)
9419402 SCREW	5/16-18 x 3/4	STEEL	120-180 (LB. IN.)		BRACKET ASSEMBLY SHIFT RELAY LEVER TO FRAME (SM V8)
179819-B	5/16-18 x 1 1/8	GM-280M	15-20		EQUALIZER BRACKET TO TRANSMISSION (SM V6) (REF)
382835 STUD	5/16-18 SPECIAL	SAE #111 OR #1112	168-204 (LB. IN.)	18.7-27.7	THROTTLE SWITCH BRACKET (JT V6) (REF)
3841103-N	5/16-18	GM-286M	14-22		UPPER LEVER ASSEMBLY TO LOWER LEVER & BRACKET ASSEMBLY (SM-FL-SHIFT) (FS)
9417954-N	5/16-18	GM-286M	96-132 (LB. IN.)		SWIVEL TO OUTER SHIFT LEVER ROD (JT-3527, 3827, 3837, 3867)
390749 KNOB	5/16-18	PLASTIC	35-40 (LB. IN.)		SHIFT KNOB TO LEVER (FS WITH D55) (WITH W29)
390768 KNOB	5/16-18	PLASTIC	40 (LB. IN.) (MAX.)		SHIFT KNOB TO LEVER (FS EXC D55) (WITH W29)
1366947-N	5/16-24	SAE #1008	96-132 (LB. IN.)		DASHPOT & SWITCH ASSEMBLY TO BRACKET (JT V6) (REF)
148220-N	5/16-24	STEEL	96-132 (LB. IN.)		DASHPOT BRACKET ASSEMBLY (JT-34, 36, 38)
115702-N	5/16-24	GM-286M	96-132 (LB. IN.)		DASHPOT ASSEMBLY TO BRACKET (JT)
9418892-N	5/16-24	GM-286M	96-132 (LB. IN.)		ACCELERATOR PEDAL LEVER ROD ASSEMBLY TO B/C (V8)
1362977-B	3/8-16 x 1/2	GM-280M	30-35		TRANSMISSION TO FLYWHEEL (JT)
9419346-B	3/8-16 x 5/8	GM-260M	10-20		DOWNSHIFT CABLE ASSEMBLY CLIP TO CYLINDER HEAD (JT V6) (REF)
9419346-B	3/8-16 x 5/8	GM-260M	10-20		SHIFT LEVER BRACKET ASSEMBLY TO PLATE (SM-FL-SHIFT)
3841492-B	3/8-16 x 3/4	GM-280M	20-30		SHIFT LEVER AND BRACKET ASSEMBLY TO TRANSMISSION (SM-FL-SHIFT, FS)
838653-B	3/8-16 x 1	GM-280M	14-17	12.7-27.7	CLUTCH COVER TO FLYWHEEL (SM, SM-FL-SHIFT, FS)
9419959-B	3/8-16 x 1 1/4	GM-280M	20-30		FLYWHEEL HOUSING TO CYLINDER BLOCK (SM, SM-FL-SHIFT, FS) (V6) (REF)
179842-B	3/8-16 x 1 3/8	GM-280M	20-30	24.9-30.9	FLYWHEEL HOUSING TO CYLINDER BLOCK (SM, SM-FL-SHIFT, FS) (V8)
179842-B	3/8-16 x 1 3/8	GM-280M	20-30		BRACKET OIL FILLER PIPE TO TRANSMISSION (JT)
179842-B	3/8-16 x 1 3/8	GM-280M	20-30		TRANSMISSION TO CYLINDER BLOCK (JT)
179843-B	3/8-16 x 1 1/2	GM-280M	10-20		THROTTLE SWITCH BRACKET TO MANIFOLD (JT V6) (REF) (FS)
9418847-B	3/8-16 x 3	GM-280M	20-30		SHIFT LEVER & BRACKET ASSEMBLY TO TRANSMISSION (SM-FL-SHIFT)
3841491-B	3/8-16 x 3 1/2	GM-280M	20-30		SHIFT LEVER & BRACKET ASSEMBLY TO TRANSMISSION (FS)
9418931	3/8-16	GM-286M	16-26		ROD TO EQUALIZER LEVER (SM, SM-FL-SHIFT, FS) (V6) (REF)
118645-N	3/8-16	GM-286M	16-26		SHIFT LEVER BRACKET ASSEMBLY TO PLATE (SM-FL-SHIFT)
1361640-N	3/8-16	GM-286M	20-30		PIVOT TO FRAME BRACKET (SM V6) (REF)

DATE	SYM	REVISION	DR.	CK.	DATE	SYM	REVISION	DR.	CK.	DATE	SYM	REVISION	DR.	CK.
										12-21-64	C	REVISED & REDRAWN		
										8-10-64	B	9418931 WAS 115943-N	PS	
										8-10-64	A	REVISED & REDRAWN	PS	

CHART—WRENCH TORQUE (TRANSMISSION)

DATE MARCH 18, 1964
DR. BY JACQUI PERKINS
CHECKED W. L. WEISS
APPR.
APPR.

FIRST USED 1965
SERIES F-85
REF.
ILLUSTRATION
PAGE C-8.2
PART NO. 388433

OLDSMOBILE DIVISION GENERAL MOTORS CORPORATION LANSING — MICHIGAN

TORQUE RANGE LB. FT.

PART NO.	DESCRIPTION	MATERIAL	SPECIFICATION	FAILURE RANGE	APPLICATION
9419143-N	1/4-20	GM-286M	48-84 (LB. IN.)		SWITCH LEVER TO SHIFT LEVER (JT-3527, 3827, 3837, 3867)
9419143-N	1/4-20	GM-286M	48-84 (LB. IN.)		SWITCH BRACKET TO SHIFT BRACKET (JT-3527, 3827, 3837, 3867)
9419143-N	1/4-20	GM-286M	48-84 (LB. IN.)		GUIDE TO SHIFT LEVER (JT-3527, 3827, 3837, 3867)
9419143-N	1/4-20	GM-286M	48-84 (LB. IN.)		INDEX PLATE TO SHIFT BRACKET (JT-3527, 3827, 3837, 3867)
9421824-B	1/4-28 x 7/16	GM-260M	48-72 (LB. IN.)	112.8-165.6 (LB. IN.)	DASHPOT BRACKET TO CARBURETOR (JT) (V8 4 BARREL)
115802-N	1/4-28	GM-286M	48-72 (LB. IN.)	112.8-165.6 (LB. IN.)	CLEVIS ASSEMBLY TO THROTTLE OPERATING ROD ASSEMBLY (V6) (REF.)
9421083-N	1/4-28	GM-286M	48-72 (LB. IN.)	112.8-165.6 (LB. IN.)	ROD ASSEMBLY TO CARBURETOR LEVER (V8)
1367657 SCREW	5/16-18 X 1/2	STEEL	17-25		SHIFT EQUALIZER TO SWIVEL (JT) EXC. 3527, 3857, 3867)
106973-B	5/16-18 x 1/2	GM-260M	10-15		COVER TO HOUSING (V6) (SM, SM-FL-SHIFT, FS)
9419029-B	5/16-18 X 1/2	GM-260M	10-15		COVER TO HOUSING (V8) (SM, SM-FL-SHIFT, FS) (SM, SM-FL-SHIFT) (3427, 69-3669-3827, 37, 67)
9418829-B	5/16-18 x 9/16	GM-280M	14-17	18.7-27.7	DASHPOT BRACKET TO MANIFOLD (JT) (V8 2 BARREL)
115658-B	5/16-18 x 9/16	GM-260M	96-192 (LB. IN.)		LOCK PLATE TO REAR BEARING RETAINER (JT)
9419853-B	5/16-18 x 5/8	GM-260M	108-156 (LB. IN.)		DASHPOT BRACKET TO MANIFOLD (JT V6) (REF)
9421822 SCREW	5/16-18 x 5/8	STEEL	18-24 (LB. IN.)		SHIFT KNOB LOCK SCREW (FS EXC D55) (FS EXC W29)
9420825 SCREW	5/16-18 X 5/8	GM-6010M	10-15		COVER TO HOUSING (V8) (SM, SM-FL-SHIFT) (3427, 69-3669-3827, 37, 67)
9419402 SCREW	5/16-18 x 3/4	GM-6010M	120-180 (LB. IN.)		BRACKET ASSEMBLY SHIFT RELAY LEVER TO FRAME (SM V8) (3427, 69-3669-3827, 37, 67)
179819-B	5/16-18 x 1 1/8	GM-280M	15-20		EQUALIZER BRACKET TO TRANSMISSION (SM V6) (REF)
382835 STUD	5/16-18 SPECIAL	SAE #1111 OR #1112	168-204 (LB. IN.)	18.7-27.7	THROTTLE SWITCH BRACKET (JT V6) (REF)
3841103-N	5/16-18	GM-286M	14-22		UPPER LEVER ASSEMBLY TO LOWER LEVER & BRACKET ASSEMBLY (SM-FL-SHIFT) (FS)
9417954-N	5/16-18	GM-286M	96-132 (LB. IN.)		SWIVEL TO OUTER SHIFT LEVER ROD (JT-3527, 3827, 3837, 3867)
9417954-N	5/16-18	GM-286M	96-132 (LB. IN.)		SHIFT LEVERS TO TRANSMISSION (SM, SM-FL-SHIFT)
390749 KNOB	5/16-18	PLASTIC	35-40 (LB. IN.)		SHIFT KNOB TO LEVER (FS WITH D55) (WITH W29)
390768 KNOB	5/16-18	PLASTIC	40 (LB. IN.) (MAX.)		SHIFT KNOB TO LEVER (FS EXC D55) (WITH W29)
1366947-N	5/16-24	SAE #1008	96-132 (LB. IN.)		DASHPOT & SWITCH ASSEMBLY TO BRACKET (JT V6) (REF)
148220-N	5/16-24	STEEL	96-132 (LB. IN.)		DASHPOT BRACKET ASSEMBLY (JT-34, 36, 38)
115702-N	5/16-24	GM-286M	96-132 (LB. IN.)		DASHPOT ASSEMBLY TO BRACKET (JT)
9418892-N	5/16-24	GM-286M	96-132 (LB. IN.)		ACCELERATOR PEDAL LEVER ROD ASSEMBLY TO B/C (V8)
1362977-B	3/8-16 x 1/2	GM-280M	30-35		TRANSMISSION TO FLYWHEEL (JT)
9419346-B	3/8-16 x 5/8	GM-260M	10-20		DOWNSHIFT CABLE ASSEMBLY CLIP TO CYLINDER HEAD (JT V6) (REF)
9419346-B	3/8-16 x 5/8	GM-260M	10-20		SHIFT LEVER BRACKET ASSEMBLY TO PLATE (SM-FL-SHIFT)
3841492-B	3/8-16 x 3/4	GM-280M	20-30		SHIFT LEVER AND BRACKET ASSEMBLY TO TRANSMISSION (SM-FL-SHIFT, FS)
9418967-B	3/8-16 X 3/4	GM-280M	20-30		SUPPORT TO TRANSMISSION (SM-FL-SHIFT) (3427, 69-3669-3827, 37, 67)
9418821-B	3/8-16 X 7/8	GM-280M	20-30		LEVER AND BRACKET ASSEMBLY TO SUPPORT AND TRANSMISSION (SM-FL-SHIFT) (34-27, 69-3669-3827, 37, 67)
838653-B	3/8-16 x 1	GM-280M	14-17	12.7-27.7	CLUTCH COVER TO FLYWHEEL (SM, SM-FL-SHIFT, FS)
9419959-B	3/8-16 x 1 1/4	GM-280M	20-30		FLYWHEEL HOUSING TO CYLINDER BLOCK (SM, SM-FL-SHIFT, FS) (V6) (REF)
179842-B	3/8-16 x 1 3/8	GM-280M	20-30	24.9-30.9	FLYWHEEL HOUSING TO CYLINDER BLOCK (SM, SM-FL-SHIFT, FS) (V8)
179842-B	3/8-16 x 1 3/8	GM-280M	20-30		BRACKET OIL FILLER PIPE TO TRANSMISSION (JT)
179842-B	3/8-16 x 1 3/8	GM-280M	20-30		TRANSMISSION TO CYLINDER BLOCK (JT)
179843-B	3/8-16 x 1 1/2	GM-280M	10-20		THROTTLE SWITCH BRACKET TO MANIFOLD (JT V6) (REF) (FS)
9409026-B(OPT)	3/8-16 x 1 1/2	GM-300M	30-35		TRANSMISSION TO FLYWHEEL (JT) (LANSING PLANT ONLY)
9418847-B	3/8-16 x 3	GM-280M	20-30		SHIFT LEVER & BRACKET ASSEMBLY TO TRANSMISSION (SM-FL-SHIFT)
3841491-B	3/8-16 x 3 1/2	GM-280M	20-30		SHIFT LEVER & BRACKET ASSEMBLY TO TRANSMISSION (FS)
9418931-N	3/8-16	GM-286M	16-26		ROD TO EQUALIZER LEVER (SM, SM-FL-SHIFT, FS) (V6) (REF)
9418931-N	3/8-16	GM-286M	16-26		SHIFT LEVER BRACKET ASSEMBLY TO PLATE (SM-FL-SHIFT)
1361640-N	3/8-16	GM-286M	20-30		PIVOT TO FRAME BRACKET (SM V6) (REF)

SHEET 2 OF 3

DATE	SYM	REVISION	DR.	CK.	DATE	SYM	REVISION	DR.	CK.	DATE	SYM	REVISION	DR.	CK.
										1-26-65	D	REVISED		
										12-21-64	C	REVISED & REDRAWN		
										8-10-64	B	9418931 WAS 115343-N	PS	
										8-10-64	A	REVISED & REDRAWN	PS	

DATE MARCH 18, 1964
DR. BY JACQUI PERKINS
CHECKED W. L. WEISS
APPR.
APPR.

CHART—WRENCH TORQUE (TRANSMISSION)

FIRST USED 1965 — Oldsmobile GRAPHIC ILLUSTRATION — PAGE C-8.2

SERIES F-85 — REV. — PART NO. 388433

765 - 35-3V25-36-22800

OLDSMOBILE DIVISION

DO NOT SCALE

OLDSMOBILE DIVISION GENERAL MOTORS CORPORATION LANSING — MICHIGAN

	PART NO.	DESCRIPTION	MATERIAL	INSTALLATION TORQUE	FAILURE RANGE	APPLICATION
	9420903-N	3/8 - 16	GM 301M	25 - 35		BRACKET TO DIFFERENTIAL
	186609-B	3/8 - 16 X 1	GM 300M			
	1363900	#20 - 9 X 1 1/4	GM 275M	108 - 144 LB. IN.	180 LB. IN.	CLAMP - SUPPORT TO TAIL PIPE
CG						CLAMP - HANGER TO TAIL PIPE
	181408-B	7/16 - 20 X 2 1/2	GM 280M			
CH	9422280-N	7/16 - 20 (LOCK)	GM 286M	45 - 55 LBS. FT.		STABILIZER TO REAR LOWER ARM
(*2)	358501-N	7/16 - 20	GM 4252M	55 - 75	81 - 102	FRONT & REAR WHEEL NUTS
(*2)	386999-B	7/16 - 20 X 1.28	AISI C1020 OR C1021	55 - 75	81 - 102	FRONT HUB BOLTS
(*2)	383600-B	7/16 - 20 X 1.25 (OPT.)	SAE 1026 OR 1022	55 - 75	81 - 102	
	3819518-B	7/16 - 20 X 1.32		55 - 75	81 - 102	REAR WHEEL BOLTS
	102646-N	7/16 - 20	GM 286M	(*1) 30 - 50		TIE ROD, PITMAN & IDLER ARMS TO INTERMEDIATE ROD
	102646-N	7/16 - 20	GM 286M	(*1) 30 - 50		TIE ROD TO STEERING ARM
	9741711	7/16 - 20	STEEL		40 - 80	FRONT BRAKE HOSE TO WHEEL CYLINDER
	136772	7/16 - 20 (OPT.)	STEEL		40 - 80	
	9740566	7/16 - 20	BRASS	84 - 120 LB. IN.	21 - 32	REAR BRAKE HOSE TO TEE-REAR AXLE BR. PIPE
	1363773	7/16 - 20 (OPT.)	BRASS	84 - 120 LB. IN.	21 - 32	
(*2)	9421430-B	1/2 - 13 X 3 3/4	GM 300M	65 - 85		LOWER ARMS TO FRAME BRACKET-FRONT SUSPENSION
(*2)	9422301-N	1/2 - 13	GM 301M			
(*2)	9421430-B	1/2 - 13 X 3 3/4	GM 300M	65 - 85		LOWER ARMS TO FRAME CROSS BAR-FRONT SUSPENSION
(*2)	9422301-N	1/2 - 13	GM 301M			
(*2)	9421430-B	1/2 - 13 X 3 3/4	GM 300M	65 - 85		UPPER ARMS TO FRAME CROSS MEMBER-REAR SUSPENSION
(*2)	9422301-N	1/2 - 13	GM 301M			
(*2)	9421430-B	1/2 - 13 X 3 3/4	GM 300M	65 - 85		UPPER ARMS TO DIFFERENTIAL CARRIER
(*2) (*3)	9422301-N	1/2 - 13	GM 301M			
(*2)	9421430-B	1/2 - 13 X 3 3/4	GM 300M	65 - 85		LOWER ARM ASSY TO FRONT BRACKET-REAR SUSPENSION
(*2)	9422301-N	1/2 - 13	GM 301M			
(*2)	9421430-B	1/2 - 13 X 3 3/4	GM 300M	65 - 85		LOWER ARM ASSEMBLY TO REAR BRACKET-REAR SUSPENSION
(*2)	9422301-N	1/2 - 13	GM 301M			
	100161-B	1/2 - 13 X 1 3/4	GM 280M			SPRING CLAMP TO LOWER ARM-REAR SUSPENSION
	9418828-N	1/2 - 13	GM 286M	20 - 30	80 - 90	
	9421085-N	1/2 - 20	GM 286M	30 - 60	80 - 90	SHOCK ABSORBER LOWER MOUNTING REAR SUSPENSION
(*2)	582088-B	1/2 - 20 X 2 3/8	GM 300M	80 - 105	157 - 186	ANCHOR BOLT - BACKING PLATE TO KNUCKLE
(*2)	114496-N	1/2 - 20	GM 286M	30 - 40		STEERING WHEEL TO COLUMN SHAFT
	9419666-N	1/2 - 20	GM 286M	35 - 45		POWER STEERING PULLEY ASSY TO PUMP
	102647-N	1/2 - 20	GM 286M	(*1) 40 MIN. TO INSTALL C'PIN		STEERING KNUCKLE TO UPPER CONTROL ARM
(*2)	9418843-N	9/16 - 18	GM 286M	(*1) 40 MIN. TO INSTALL C'PIN		STEERING KNUCKLE TO LOWER CONTROL ARM
(*2)	137399-N	5/8 - 18 (TUBE)	STEEL	20 - 35		RETURN LINE TO STEERING GEAR
	NUT (TUBE)	5/8 - 18	STEEL	20 - 35		PRESSURE LINE TO STEERING PUMP
	NUT (TUBE)	11/16 - 18	STEEL	20 - 35		PRESSURE LINE TO STEERING GEAR
	378137-N	3/4 - 20	GM 286M	WHILE ROTATING HUB & DRUM ASSEMBLY -		FRONT WHEEL BEARING ADJUSTMENT PROCEDURE

1. TIGHTEN NUT TO 25 TO 30 LB. FT. TORQUE
2. BACK-OFF NUT 1/2 TURN
3. RETIGHTEN NUT FINGER TIGHT-SECURE IF POSSIBLE
4. IF UNABLE TO SECURE AT FINGER TIGHT, BACK-OFF TO FIRST SECURING POSITION
5. FRONT DRUM MUST BE ROTATED AT LEAST THREE REVOLUTIONS OF SPINDLE NUT DURING TIGHTENING AND RETIGHTENING OPERATIONS
6. CHECKING DIM-.001 - .005 END PLAY BETWEEN HUB & SPINDLE

(*2)	5667628-N	7/8 - 14	SAE 1018 OR 1022	120 - 150	PITMAN ARM TO GEAR
(1965)	454912-B	3/8 - 24 X 7/8	300M	35 - 45	UPPER ARM BUSHING TO SHAFT

(*1) AFTER REACHING MIN. TORQUE REQUIRED, NUT MUST ALWAYS BE TIGHTENED FURTHER, NEVER BACKED OFF, TO INSERT C'PIN.
(*2) ALSO SHOWN ON 384582 (33-34-35-36-38-39) TORQUE WRENCH CHART.
(*3) 9421001 - TYPE "N" LOCK NUT USED ON 1964 MODELS AT THIS POSITION ONLY.

SHEET 3 OF 3

DATE	SYM	REVISION	DR.	CK.
6-4-63	CH	9422280-N ADDED	CG	JA
6-4-63	CG	181408-B ADDED	CG	JA
3-10-65	CF	REDRAWN ON NEW FORMAT	KG	JA

CHART WRENCH TORQUE (CHASSIS)

DATE MARCH 12, 1963
DR. BY N. WERNER
CHECKED BEDFORD
APPR. T.R. FERNAND
APPR.

FIRST USED 1964
SERIES F-85
REF.
PAGE C-8.38
PART NO. 384394

PART NO.	DESCRIPTION	MATERIAL	INSTALLATION TORQUE	FAILURE RANGE	APPLICATION
9418931-N	3/8 - 16	GM 286M	20 - 28	34 - 40	MASTER CYLINDER TO PEDAL BRACKET
(*2) 9418821-B	3/8 - 16 X 7/8	GM 280M	30 - 40	48 - 50	POWER STEERING FRONT BRACKET TO PUMP (ADJ. SLOT)
9418931-N	3/8 - 16	GM 286M	20 - 28	48 - 55	BRAKE PEDAL BRACKET TO DASH PANEL
(*2) 3792533-B	3/8 - 16 X 3 3/8	GM 260M	96 - 120 LB. IN.		FUEL TANK TO UNDERBODY (EXC. 3055 - 3155)
(*2) 102635-N	3/8 - 16	GM 286M		24 - 43	
9418967-B	3/8 - 16 X 3/4	GM 280M			FRONT ENGINE MOUNTING BRACKET TO FRAME
9418931-N	3/8 - 16	GM 286M	30 - 40	48 - 50	
3780370-B	3/8 - 16 X 2 7/8	GM 255M			FUEL TANK TO FRONT & REAR SUPPORT (3055-3155)
102635-N	3/8 - 16	GM 286M	84 - 108 LB. IN.	24 - 43	
3760425	3/8 - 16 X 2 13/64 (R. H.) STUD (V-6)	AISI C1035 OR C1038			FRONT EXHAUST PIPE TO MANIFOLD
3829086-N	3/8 - 16 SPECIAL LOCK (R. H.)	GM 286M	10 - 15		
179839-B	3/8 - 16 X 1.00 (V-6)	GM 280M	10 - 18	51 - 70	FRONT EXHAUST PIPE TO MANIFOLD
(*2) 9418994-B	3/8 - 16 X1 1/4 (V-8)	GM 280M	10 - 18	51 - 70	
1361640-N	3/8 - 16	AISI C1110	20 - 27		STEERING COLUMN SUPPORT TO INST PANEL LOWER REINF.
9418822-B	3/8 - 16 X 1.00	GM 280M			TRANSMISSION SUPPORT TO FRAME
102635-N	3/8 - 16	GM 286M	30 - 40		
(*2) 9418931-N	3/8 - 16	GM 286M	20 - 28	48 - 55	MASTER CYLINDER TO POWER UNIT
100133-B	3/8 - 16 X 3/4	GM 260M			FUEL TANK TO FRONT & REAR SUPPORT (3055-3155)
102635-N	3/8 - 16	GM 286M	120 - 180 LB. IN.	24 - 43	
(*2) 1365067-N	3/8 - 24	SAE 1113	18 - 20		FRONT SHOCK ABSORBER UPPER MTG.
1365067-N	3/8 - 24	SAE 1113	18 - 20		REAR SHOCK ABSORBER UPPER MTG. (EXT. S.W. ONLY)
124925-N	3/8 - 24	GM 286M	20 - 27	28.9 - 42.7	LOCK NUT MASTER CYLINDER PUSH ROD
(*2) 5686553-B	3/8 - 24 X 1.22 (PINCH BOLT)	GM 280M	25 - 35		STEERING SHAFT TO STEERING GEAR FLANGE (TILT WHEEL)
(*2) 9776453-B	3/8 - 24 X 1.00 (EXC. EXT. SW.)	GM 300M	30 - 40	62.5 - 72.7	BRAKE TO AXLE HOUSING
(*2) 414999-B	3/8 - 24 X 1.00 (EXT. SW.)	SAE 1335	30 - 40	62.5 - 72.7	
1368360-B	3/8 - 24 X 1.00 (OPT) (EXT. SW.)	GM 280M			
(*2) 385186-N	3/8 - 24	GM 286M	30 - 40		
1366144-B	7/16 - 14 X 2.62	GM 280M	25 - 35	46.5 - 68.8	BODY MOUNTING EXC #3 POSITION
1366143-B	7/16 - 14 X 2.25	GM 280M	25 - 35	46.5 - 68.8	BODY MOUNTING #3 POSITION
386787	7/16 - 14 X 2.09 (OPT)	GM 280M	25 - 35	46.5 - 68.8	
381909-B	7/16 - 14 X 2 1/4	GM 300M			UPPER ARM SHAFT TO FRONT FRAME BRACKET
3765425-N	7/16 - 14	GM 301M	55 - 75	80.6 - 97.3	
9419073-B	7/16 - 14 X 1.00	GM 280M			BUMPER SPACER TO AXLE HOUSING BRACKET
9418897-N	7/16 - 14	GM 286M	35 - 55	80 - 94	
454934-B	7/16 - 14 X 2 1/2	GM 300M			BRAKE & STEERING ARM TO KNUCKLE
446681-B	7/16 - 14 X 2 1/4	GM 300M			
3765425-N	7/16 - 14	GM 301M	60 - 82	80.6 - 97.3	
9419713-B	7/16 - 14 X 3 3/4	GM 280M			FRONT ENGINE MOUNTING PAD ASSY TO FRAME BRKT.
9418897-N	7/16 - 14	GM 286M	45 - 60	80 - 94	
384311-B	7/16 - 14 X 3 3/4 (V-6)	GM 280M	45 - 60	80 - 94	FRONT ENGINE MOUNTING ASSY TO FRAME BRKT.
9418897-N	7/16 - 14 (V-6)	GM 286 M			
9420246-B	7/16 - 14 X 1.00	GM 300M	45 - 60		TRANSMISSION MOUNTING ASSY TO SUPPORT
9419714-B	7/16 - 14 X 4 7/16	GM 300M	60 - 80	83 - 95	STEERING GEAR TO FRAME
179856-B	7/16 - 14 X 3/4 (V-6)	GM 280M	45 - 60	80 - 94	FRONT ENGINE MOUNTING ASSY TO ENGINE
(*2) 9419073-B	7/16 - 14 X 1.00 (V-8)	GM 280M	55 - 65	80 - 94	FRONT ENGINE MOUNTING ASSY TO ENGINE
5462945	5/16 - 24 BLEEDER VALVE		2.5 - 5.0		FRONT & REAR BRAKE CYLINDER
569206	5/16 - 18 "U" BOLT (V-8) (L. H.)	SAE 1010			MUFFLER TO EXHAUST PIPE
1359887-N	5/16 - 18	GM 286M	120 - 180 LB. IN.		

(*2) ALSO SHOWN ON 384582 (33-34-35-36-38-39) TORQUE WRENCH CHART.

SHEET 2 OF 3

DATE	SYM	REVISION	DR.	CK.
3-10-65	C.F.	REDRAWN ON NEW FORMAT		

CHART WRENCH TORQUE CHASSIS

DATE MARCH 12, 1963
DR. BY N. WERNER
CHECKED BEDFORD
APPR. T.R. FERNAND
APPR.

FIRST USED 1964
SERIES A
REF.
ILLUSTRATION
PAGE C-8.3A
PART NO. 384394

OLDSMOBILE DIVISION
GENERAL MOTORS CORPORATION
LANSING, MICHIGAN

1965 - F-85 TORQUE SPECIFICATIONS

PART NO.	SIZE	FT. LBS.	APPLICATION
8-9419041	10-24 SLF.THD.	20-30 IN.LBS.	RETAINER ASSEMBLY TO FENDER
3-500546	8-18-7/16	30-36 IN.LBS.	REAR WHEEL OPENING MOULDING TO REAR FENDER
3-9420491	8-18X1/2	30-36 IN.LBS.	ROCKER PANEL MOULDING EXTENSION TO FRONT FENDER
3-9420491	8-18X1/2	30-36 IN.LBS.	ROCKER PANEL MOULDING TO FRONT FENDER
8-9418828	1/2-13	65-70	FRONT PRIMARY BAR ASSEMBLY TO FRAME
8-9418828	1/2-13	65-70	FRONT PRIMARY BAR REINFORCEMENT TO BRACKET
8-9418828	1/2-13	65-70	FRONT PRIMARY BAR BRACE-OUTER TO BRACKET
8-9418097	7/16-14	35-40	FRONT PRIMARY BAR BRACE-OUTER TO BUMPER
8-9418097	7/16-14	35-40	REAR BUMPER BRACKET TO BUMPER
8-9418828	1/2-13	65-70	REAR BUMPER ASSEMBLY TO FRAME
8-9418097	7/16-14	35-40	REAR BUMPER BRACE OUTER TO BUMPER
8-9419750	1/4 SELF THREAD	40-45 IN.LBS.	REAR BUMPER GRAVSHIELD
3-304700	5/16-18X7/8	15-20	HOOD LATCH SUPPORT TO UPPER RADIATOR SUPPORT ASSEMBLY
3-3046202 OPT.	5/16-18X7/8	15-20	HOOD LATCH SUPPORT TO UPPER RADIATOR SUPPORT ASSEMBLY
3-304700	5/16-18X7/8	15-20	HOOD LATCH SUPPORT TO LOWER RADIATOR SUPPORT ASSEMBLY
3-3046202 OPT.	5/16-18X7/8	15-20	HOOD LATCH SUPPORT TO LOWER RADIATOR SUPPORT ASSEMBLY
3-304700	5/16-18X7/8	15-20	HOOD LATCH SUPPORT TO BRACKET ASSEMBLY
3-3046202 OPT.	5/16-18X7/8	15-20	HOOD LATCH SUPPORT TO BRACKET ASSEMBLY
3-304700	5/16-18X7/8	15-20	BRACKET ASSEMBLY TO LOWER RADIATOR SUPPORT
3-3046202 OPT.	5/16-18X7/8	15-20	BRACKET ASSEMBLY TO LOWER RADIATOR SUPPORT
8-503066	7/16-14	30-35	RADIATOR LOWER SUPPORT TO FRAME
3-9419301	3/8-16X13/16	24-30	HINGE ASSEMBLY TO HOOD
3-9419301	3/8-16X13/16	24-30	HINGE ASSEMBLY TO FENDER
3-9419906	3/8-16X1 1/8	24-30	FRONT FENDER REAR UPPER & LOWER TO BODY
3-304700	5/16-18X7/8	15-20	FILLER PLATE ATTACHMENT TO RADIATOR SUPPORT ASSEMBLY
3-3046202 OPT.	5/16-18X7/8	15-20	FILLER PLATE ATTACHMENT TO RADIATOR SUPPORT ASSEMBLY
3-304700	5/16-18X7/8	15-20	FENDER ASSEMBLY TO RADIATOR SUPPORT ASSEMBLY
3-3046202 OPT.	5/16-18X7/8	15-20	FENDER ASSEMBLY TO RADIATOR SUPPORT ASSEMBLY
8-9420827	1/4-14	10-15	FENDER LOWER REAR TO FILLER PLATE
3-9419995	5/16-18X5/8	15-20	ENGINE SIDE FILLER TO FRAME
3-9419969	5/16-18X5/8	15-20	FENDER AT WHEEL OPENING TO FILLER PLATE
3-9419969	5/16-18X5/8	15-20	ASSEMBLY FLANGE TO FILLER PLATE
8-3834125	10-24	25-40 IN.LBS.	W/S WIPER MOTOR ATTACHING
8-3833045	10-24	25-40 IN.LBS.	W/S WIPER TRANSMISSION TO SUPPORT
8-120622	8-32	1-1.5	WIRING CONNECTION TO STARTER MOTOR
5-122007	5/16-18	1.5-2.5	BATTERY HOLD DOWN
3-3046201	5/16-18	16-18	BATTERY SUPPORT TO WHEEL HOUSE
8-119373	3/8-16	10-12	BATTERY CABLE TO STARTER MOTOR SOLENOID
8-119373	3/8-16	8-10	BATTERY & WIRING CABLE TO JUNCTION BLOCK
8-7279805	7/16-20	36-72 IN.LBS.	RADIO MOUNTING
6409637	3/8-18	5-10 IN.LBS.	SPEEDOMETER CABLE ASSEMBLY TO SPEEDOMETER
300170	3-56	3-4 IN.LBS.	CLOCK KNOB TO CLOCK SET STEM
3-9422287	8-18X5/8	15-20 IN.LBS.	RADIO SUPPORT BRACKET TO RADIO
3-9422287	8-18X5/8	15-20 IN.LBS.	RADIO SIDE SUPPORT TO BRACKET
8-9419751	FOR .125 STUD	12-18 IN.LBS.	RADIO SPEAKER GRILLE TO INSTRUMENT PANEL
8-1761640	3/8-16	20-21	STEERING COLUMN SUPPORTS, LOWER END
3-304700	5/16-18X7/8	15-20	STEERING COLUMN SUPPORTS, UPPER END
6409637	7/8X18	20-60 IN.LBS.	SPEEDOMETER CABLE ASSEMBLY TO TRANSMISSION
3-304700	5/16-18X7/8	15-20	GRILLE ATTACHMENT TO SUPPORT
3-3046202 OPT.	5/16-18X7/8	15-20	GRILLE ATTACHMENT TO SUPPORT
3-304700	5/16-18X7/8	15-20	RADIATOR SUPPORT ASSEMBLY TO STONE SHIELD ASSEMBLY
3-3046202 OPT.	5/16-18X7/8	15-20	RADIATOR SUPPORT ASSEMBLY TO STONE SHIELD ASSEMBLY
3-304700	5/16-18X7/8	15-20	HEADLAMPS TO RADIATOR SUPPORT ASSEMBLY
3-3046202 OPT.	5/16-18X7/8	15-20	HEADLAMPS TO RADIATOR SUPPORT ASSEMBLY
3-9422374	8-18X7 3/8	15-20 IN.LBS.	HEADLAMP DOOR ASSEMBLY TO RADIATOR SUPPORT ASSEMBLY LOWER CENTER
3-9420721	8-18X5/8	15-20 IN.LBS.	HEADLAMP DOOR ASSEMBLY TO RADIATOR SUPPORT ASSEMBLY
3-304700	5/16-18X7/8	15-20	* BRACKET ASSEMBLY TO UPPER RADIATOR SUPPORT
3-3046202 OPT.	5/16-18X7/8	15-20	* BRACKET ASSEMBLY TO UPPER RADIATOR SUPPORT
3-304700	5/16-18X7/8	15-20	* FAN SHROUD TO BRACKET ASSEMBLY
3-3046202 OPT.	5/16-18X7/8	15-20	* FAN SHROUD TO BRACKET ASSEMBLY
3-9419727	1/4-14X5/8	5-8	* LOWER BRACKET ASSEMBLY TO LOWER RADIATOR SUPPORT
3-9419969	5/16-18X5/8	15-20	RADIATOR SUPPORT TO GRILLE
3-3046201 OPT.	5/16-18X5/8	15-20	RADIATOR SUPPORT TO GRILLE
C-595209	CLAMP	10-26 IN.LBS.	* RADIATOR HOSE CLAMP
C-9411656 OPT.	CLAMP	10-26 IN.LBS.	* RADIATOR HOSE CLAMP
3-304700	5/16-18X7/8	15-20	RADIATOR SUPPORT BRACKET TO RADIATOR SUPPORT (UPPER)
3-3046202 OPT.	5/16-18X7/8	15-20	RADIATOR SUPPORT BRACKET TO RADIATOR SUPPORT (UPPER)
3-9419727	1/4-14X5/8	5-8	RADIATOR SUPPORT BRACKET TO RADIATOR SUPPORT (LOWER)
C-595402	CLAMP	10-26 IN.LBS.	RADIATOR HOSE CLAMP
C-564335	CLAMP	10-26 IN.LBS.	RADIATOR HOSE CLAMP
C-595209	CLAMP	10-26 IN.LBS.	RADIATOR HOSE CLAMP
3-9419663	8X18X1/2	30-36 IN.LBS.	STONE SHIELD EXTENSION ASSEMBLY TO FENDER ASSEMBLY
3-9419906	3/8-16X1 1/8	24-30	FENDER ASSEMBLY TO SHROUD
3-304700	5/16-18X7/8	15-20	RADIATOR SUPPORT ASSEMBLY TO FENDER ASSEMBLY (UPPER)
3-3046202 OPT.	5/16-18X7/8	15-20	RADIATOR SUPPORT ASSEMBLY TO FENDER ASSEMBLY (UPPER)
8-9417954	5/16-18	15-20	BUMPER ASSEMBLY TO SUPPORT ASSEMBLY
3-304700	5/16-18X7/8	15-20	STONE SHIELD EXTENSION TO RADIATOR SUPPORT ASSEMBLY
3-3046202 OPT.	5/16-18X7/8	15-20	STONE SHIELD EXTENSION TO RADIATOR SUPPORT ASSEMBLY
3-304700	5/16-18X7/8	15-20	STONE SHIELD ASSEMBLY TO STONE SHIELD EXTENSION ASSEMBLY
3-3046202 OPT.	5/16-18X7/8	15-20	STONE SHIELD ASSEMBLY TO STONE SHIELD EXTENSION ASSEMBLY
3-304700	5/16-18X7/8	15-20	BAFFLE TO FILLER PLATE
3-3046202 OPT.	5/16-18X7/8	15-20	BAFFLE TO FILLER PLATE
8-9419754	5/32 SLF.THD.	13-18 IN.LBS.	SCRIPT TO FENDER
8-9419754	5/32 SLF.THD.	13-18 IN.LBS.	EMBLEM TO FENDER
3-500546	8-18X7/16	30-36 IN.LBS.	WHEEL OPENING MOULDING TO FENDER
8-9419750	1/4 SLF.THD.	40-45 IN.LBS.	FENDER SIDE MOULDING TO FENDER
8-9419041	10-24 SLF.THD.	20-30 IN.LBS.	FENDER SIDE MOULDING TO FENDER
8-9419041	10-24 SLF.THD.	20-30 IN.LBS.	UPPER SIDE MOULDING TO FENDER
3-500546	8-18X7/16.	30-36 IN.LBS.	ROCKER PANEL MOULDING TO ROCKER PANEL

ALL #8 SCREWS DRIVEN INTO PLASTIC PARTS USE 15-20 IN.LBS. TORQUE

* FOR V-8 ONLY

DATE	SYM.	REVISION RECORD	AUTHORITY	DR.	CK.
11/30/64	B	RETYPED & REVISED WAS 3 SIZE			
	C				

NO. 388238 SHEET OF LAST CHANGE B

TOLERANCES UNLESS OTHERWISE SPECIFIED ± .03 ALLOWED ON TWO PLACE DECIMALS & ±.010 ALLOWED ON THREE PLACE DECIMALS
ON ALL CASTINGS AND FORGINGS ALLOW FOR FINISH AS FOLLOWS
COMMERCIAL TOLERANCES APPLY TO SHEET METAL, CASTINGS, TUBING, ROLLED, DRAWN OR EXTRUDED SECTIONS & STANDARD PARTS

DO NOT SCALE

DATE FEBRUARY 27, 1964 — DR. JACQUI PERKINS
FIRST USED 1965
SERIES 0081

NAME CHART - WRENCH TORQUE

B 388238

C-8.4

GROUP	TORQUE LB. FT.	APPLICATION
6A1 - CYLINDER BLOCK	(A) 95-120	CRANKSHAFT BEARING CAP BOLTS (1-2-3-4)-1/2
	15-20	CYLINDER BLOCK DRAIN PLUG
6A2 - CYLINDER HEAD	(B) 65-80	CYLINDER HEAD TO BLOCK BOLTS - 7/16
6C2-CRANKSHAFT BALANCER	140-160	CRANKSHAFT BALANCER ASSEMBLY OR HUB TO CRANKSHAFT BOLT-5/8
6D CONNECTING ROD	(B) 30-40	CONNECTING ROD NUT-3/8
6E-OIL PAN	(C) 9-13	OIL PAN BOLTS-5/16
	25-35	OIL PAN DRAIN PLUG-7/8
	9-13	OIL PAN BAFFLE TO CYLINDER BLOCK-5/16
6F-OIL PUMP	6-9	OIL SCREEN ASSEMBLY-FLANGE TO BLOCK-1/4
	8-12	OIL PUMP COVER TO PUMP BOLTS-1/4
	25-30	CAP OIL PRESSURE REGULATOR VALVE
6G1-OIL DISTRIBUTION	20-30	OIL GALLEY PLUGS
6G5-FILTER ASSEMBLY	10-15	FILTER ELEMENT TO BASE
6J-FRONT COVER	17-23	COVER TO CYLINDER BLOCK BOLTS-5/16
6K1-FAN DRIVE	(D) 17-23	FAN & DRIVEN PULLEY TO HUB BOLTS-5/16
	(E) 18-25	FAN DRIVING PULLEY TO HUB TO BALANCER BOLTS-5/16
6K2-WATER PUMP	6-9	PUMP BODY TO FRONT COVER BOLTS-1/4
6K3-WATER OUTLET	17-23	WATER OUTLET TO MANIFOLD BOLTS-5/16
6L-MANIFOLD	25-35	INTAKE MANIFOLD TO CYLINDER HEAD BOLTS-3/8
	10-15	EXHAUST MANIFOLD TO CYLINDER HEAD BOLTS-3/8
6M1-CARBURETOR	12-15	CARBURETOR TO INTAKE MANIFOLD NUT-5/16
	15-25	CHOKE HEAT AIR FEED PIPE CLIP TO CYLINDER HEAD
	8-12	CHOKE AIR PIPE NUT-1/4
6M3-AIR CLEANER	(H) 17-23 LB.-IN.	AIR CLEANER TO CARBURETOR STUD-1/4
	(J) 17-23 LB.-IN.	AIR CLEANER TO CARBURETOR WING NUT-1/4
6M4-FUEL PUMP	17-23	FUEL PUMP TO TIMING CHAIN COVER-5/16
6O-MOTOR MOUNTING	50-75	MOTOR MOUNT TO CYLINDER BLOCK BOLTS-7/16
6S1-CAMSHAFT	40-55	GEAR & ECCENTRIC TO CAMSHAFT-7/16
	6-9	TIMING CHAIN DAMPER TO CYLINDER BLOCK BOLT-1/4
	10-15	TIMING CHAIN DAMPER TO CYLINDER BLOCK BOLT-5/16
6S3-ROCKER ARM	25-35	BRACKET TO CYLINDER HEAD BOLT-3/8
	(F) 3-4.5	VALVE COVER BOLT-1/4
6Y1-DELCOTRON	20-25 LB.-IN.	DELCOTRON BATTERY TERM. NUT
		FOR TORQUE REQUIREMENTS ON MOUNTING BRACKETS SEE TABLE BELOW
6Y2-STARTING MOTOR	(K) 30-40	STARTER MOTOR TO CYLINDER BLOCK BOLTS-3/8
	9-13	MOUNTING BRACKET TO CYLINDER BLOCK BOLT-5/16
	9-13	MOUNTING BRACKET TO STARTER MOTOR-5/16
6Y3-DISTRIBUTOR	10-15	DISTRIBUTOR CLAMP TO TIMING CHAIN COVER BOLT-3/8
6Y6-ELECTRICAL	25-35	SPARK PLUGS
	9-13	IGNITION COIL TO INTAKE MANIFOLD BOLT-5/16
	15-20 LB.-IN.	IGNITION COIL TERMINAL NUT-#10
12J-OIL PRESSURE GAGE	8-10	OIL PRESSURE GAGE TO TIMING CHAIN COVER
35A40-POWER STEERING		FOR TORQUE REQUIREMENTS ON PUMP MOUNTING BRACKETS SEE TABLE BELOW
35C40-AIR CONDITIONING	10-15	FAN TO CLUTCH ASSEMBLY BOLT-5/16
	15-20	CLUTCH TO HUB NUT-5/16

FOR TORQUE REQUIREMENTS ON DELCOTRON MOUNTING BRACKETS & COMPRESSOR MOUNTING BRACKETS SEE CHART BELOW.

THREAD	TORQUE LB.-FT
5/16-18	20-25
5/16-24	20-25
3/8-16	25-35
7/16-14	40-50
7/16-20	40-50

DATE	SYM.	REVISION RECORD	AUTHORITY	DR.	CK.
10-16-63		WAS ED 0317		DA	DL
1-13-64	A	WAS 100-110		LS	DL
1-13-64	B	WAS 30-35		AM	DL
1-13-64	C	WAS 6-15		BM	DL
1-13-64	D	WAS 15-25		BM	DL
1-13-64	E	WAS 15-25		BM	DL
1-13-64	F	WAS 3-5		BM	DL
1-13-64	G	WAS 65-75		BM	DL
1-13-64	H	WAS 20-30		BM	DL
1-13-64	J	WAS 15-20		BM	DL
1-13-64	K	WAS 40 MIN.	PA17	BM	DL

386266 SHEET OF LAST CHANGE K

DO NOT SCALE

DATE AUGUST 2, 1963

MODEL 1964 30-39

ENGINE

CHART-WRENCH TORQUE SPECIFICATION

386266

1965 F-85 & B/C

OLDSMOBILE DIVISION
GENERAL MOTORS CORPORATION
LANSING, MICHIGAN

GROUP	TORQUE LB.FT.	APPLICATION
6A1 - CYLINDER BLOCK	60-80	CRANKSHAFT BEARING CAP BOLTS- 7/16 (F-85 & 5200 #1-2-3-4) (A)
	90-120	CRANKSHAFT CAP BOLTS-1/2 (F-85 & 5200 #5) (B)
	90-120	CRANKSHAFT CAP BOLTS - 1/2 (6B7 #1-2-3-4-5) (C)
6A2 - CYLINDER HEAD	60-80	CYLINDER HEAD TO BLOCK BOLTS - 7/16
6C2 - CRANKSHAFT BALANCER	(E) (J) (D) 140 MIN	CRANKSHAFT BALANCER ASSEMBLY OR HUB TO CRANKSHAFT BOLT - 3/8 (E) (J)
6D - CONNECTING ROD	32-42	CONNECTING ROD NUT- 3/8
6E - OIL PAN	12-15	OIL PAN BOLTS-5/16
	(F) 7-10	OIL PAN BOLTS-1/4 (G)(H)
	30-50	OIL PAN DRAIN PLUG-7/8
6F - OIL PUMP	25-35	PUMP ASSEMBLY TO BEARING CAP BOLTS-3/8
	5-6	OIL PUMP COVER TO PUMP BOLTS-1/4
6G5 - FILTER ASSEMBLY	16-20	FILTER ELEMENT TO BOWL
	25-35	FILTER ASSEMBLY TO CYLINDER BLOCK BOLTS 3/8
6J - FRONT COVER	25-35	COVER TO CYLINDER BLOCK BOLTS- 3/8
	(H) 16-22	COVER TO CYLINDER BLOCK BOLTS 5/16
6K1 - FAN DRIVE	15-20	FAN & DRIVER PULLEY TO HUB BOLTS-5/16
	15-20	FAN DRIVING PULLEY TO HUB OF BALANCER BOLTS 5/16
6K2 - WATER PUMP	8-13	PUMP BODY TO FRONT COVER BOLTS-1/4 (TOP-1/16)
6K3 - OUTLET	15-20	WATER OUTLET MANIFOLD BOLTS 5/16
6L - MANIFOLD	25-35	INTAKE MANIFOLD TO CYLINDER HEAD BOLTS-3/8
	5-8	INTAKE MANIFOLD BAFFLE TO CYLINDER BLOCK BOLTS-1/4
	20-25	EXHAUST MANIFOLD TO CYLINDER HEAD BOLTS-3/8
6M1 - CARBURETOR	10-15	CARBURETOR TO INTAKE MANIFOLD BOLT - 5/16
	10-15	TUBE & PLATE ASSEMBLY TO INTAKE MANIFOLD BOLTS 5/16
6M5 - AIR CLEANER	3-5	AIR CLEANER TO CARBURETOR STUD-1/4
	12-20 LB.-IN.	AIR CLEANER TO CARBURETOR WING NUT 1/4
6N4 - FUEL PUMP	20-25	FUEL PUMP TO BLOCK BOLTS-5/16
(N)		
6A1 - CAMSHAFT	50-65	GEAR & SPROCKET TO CAMSHAFT 7/16
6B3 - ROCKER ARM	30-35	ROCKER ARM STUD
	20-25	ROCKER ARM STUD NUT
	6-7	VALVE COVER BOLT - 1/4
6T1 - GENERATOR	20-25 LB.-IN.	GENERATOR BATTERY TERMINAL NUT-#12
		FOR TORQUE REQUIREMENTS ON MOUNTING BRACKETS SEE TABLE BELOW
6T2 - STARTING MOTOR	25-35	STARTER MOTOR TO CYLINDER BLOCK BOLTS 3/8
	15-25	BRACE TO CYLINDER BLOCK BOLT-3/8
	10-15	BRACE TO STARTER MOTOR 5/16
6T3 DISTRIBUTOR	11-14	DISTRIBUTOR CLAMP TO CYLINDER BLOCK BOLT-3/8
6T4 ELECTRICAL	25-35	SPARK PLUGS-14MM
	10-15	IGNITION COIL TO INTAKE MANIFOLD BOLT-5/16
	15-20 LB.-IN.	IGNITION COIL TERMINAL NUT - #10
	10-20	(A) GROUND STRAP TO CYLINDER HEAD BOLT - 3/8
3V040-POWER STEERING		FOR TORQUE REQUIREMENTS ON PUMP MTG. BRACKETS SEE TABLE BELOW.
3V040 AIR CONDITIONING	10-15	FAN TO CLUTCH ASSEMBLY BOLT-5/16
	15-20	CLUTCH TO HUB NUT-5/16
	10-15	CLUTCH TO HUB BOLT - 5/16
		FOR TORQUE REQUIREMENTS ON GENERATOR MTG. BRACKETS & COMPRESSOR MTG. BRACKETS SEE TABLE BELOW.

C-8.6

THREAD	TORQUE LB-FT
5/16-18	20-25
5/16-24	20-25
3/8 -16	25-35
7/16-14	60-80
7/16-20	60-80

387737

DO NOT SCALE

387737

OLDSMOBILE DIVISION GENERAL MOTORS CORPORATION LANSING — MICHIGAN

TORQUE RANGE LB. FT.

PART NO.	DESCRIPTION	MATERIAL	SPECIFICATION	FAILURE RANGE	APPLICATION
9418931-N	3/8-16	GM-286M	30-40		TRANSMISSION TO ENGINE BRACKET (JT V8) (3455, 65, 3855, 65)
9418931-N	3/8-16	GM-286M	16-26		SHIFT RODS TO TRANSMISSION LEVER AND RELAY LEVER (SM V8)
9418931-N	3/8-16	GM-286M	16-26		OUTER LEVER RANGE SELECTOR (JT)
9418931-N	3/8-16	GM-286M	16-26		ROD TO EQUALIZER LEVER (SM, SM-FL-SHIFT, FS) (V8)
9418931-N	3/8-16	GM-286M	16-26		BALL STUD EQUALIZER TO FRAME BRACKET (SM) (V8)
1349346-N	3/8-24	GM-286M	120-180 (LB. IN.)		SHIFT RODS TO EQUALIZER (SM)
9420821-N	3/8-24	GM-286M	120-180 (LB. IN.)		TRANSMISSION SHIFTER LEVERS (SM)
9420821-N	3/8-24	GM-286M	120-180 (LB. IN.)		TRANSMISSION SHIFTER LEVERS (FS)
137396-N	3/8-24 STRAIGHT PIPE THREAD	NUT-FLARED TUBE-STEEL	72-108 (LB. IN.)		MODULATOR VALVE PIPE TO CONNECTOR (JT)
9419073-B	7/16-14 x 1	GM-280M	25-35	46.5-68.8	SUPPORT ASSEMBLY TO TRANSMISSION (JT)
181391-B	7/16-20 x 5/8	SAE #1335 OR #3135	50-60		FLYWHEEL TO CRANKSHAFT (JT) (V6)
1333319-B	7/16-20 x 5/8	SAE #4037	50-65		FLYWHEEL TO CRANKSHAFT (JT) (V8)
1161920-B(OPT)	7/16-20 x 5/8	GM-280M	50-65		FLYWHEEL TO CRANKSHAFT (JT) (V8)
454956-B	7/16-20 x 7/8	SAE #1335 OR #3135	85-95	98.8-114.9	FLYWHEEL TO CRANKSHAFT (SM, SM-FL-SHIFT, FS) (V6)
558805-B	7/16-20 x .920	SAE #1335 OR #3135	85-95	98.8-114.9	FLYWHEEL TO CRANKSHAFT (SM, SM-FL-SHIFT, FS) (V6) (V8)
3841497-N	7/16-20	GM-286M	132-180 (LB. IN.)		REVERSE SHIFT ROD TO OUTER TRANSMISSION LEVER (FS)
3841497-N	7/16-20	GM-286M	132-180 (LB. IN.)		1ST & 2ND AND 3RD & 4TH CONTROL RODS TO OUTER TRANSMISSION LEVER (FS)
3841497-N	7/16-20	GM-286M	132-180 (LB. IN.)		1ST & REV AND 2ND & 3RD CONTROL RODS TO OUTER TRANSMISSION LEVERS (SM-FL-SHIFT)
106342-B	1/2-13 x 1 3/8	GM-280M	60-70		TRANSMISSION TO FLYWHEEL HOUSING (SM, SM-FL-SHIFT, FS)
100161-B	1/2-13 x 1 3/4	GM-280M	60-70		TRANSMISSION TO FLYWHEEL HOUSING (SM, SM-FL-SHIFT, FS)
3816341 STUD	1/2-13	HR STEEL AISI C-1016	25-30		BALL STUD EQUALIZER TO ENGINE (SM-FL-SHIFT, FS) (V8)
1363426 PIVOT	1/2-13	SAE #1112 OR #1114	45-60		CLUTCH EQUALIZER LEVER TO CYLINDER BLOCK (SM V6)
444788	1/2-14 DRYSEAL PIPE THREAD	STEEL	25-35		REAR AXLE HOUSING FILLER PLUG (V6 & V8) (SM, SM-FL-SHIFT, FS) (JT)
382991-N	1/2-20	NUT-FLARED TUBE-STEEL	20-30		OIL COOLER PIPE TO CONNECTOR AT RADIATOR (JT)
382991-N	1/2-20	NUT-FLARED TUBE-STEEL	20-30		OIL COOLER PIPE TO ELBOW CONNECTOR AT RADIATOR (JT) (V8 WITH C60)
382991-N	1/2-20	NUT-FLARED TUBE-STEEL	20-30		OIL COOLER PIPE TO CONNECTOR AT TRANSMISSION (JT)
438159	1/2 TAPER PIPE THREAD	CAST IRON	35-40		TRANSMISSION FILLER PLUG (SM, SM-FL-SHIFT, FS)
444588	1/2 TAPER PIPE THREAD	MALLEABLE IRON	35-40		TRANSMISSION FILLER PLUG (SM, SM-FL-SHIFT, FS)
384377 KNOB	9/16-18	PLASTIC	36-48 (LB. IN.)		SHIFT KNOB TO LEVER (SM-FL-SHIFT)
384568 KNOB	9/16-18	PLASTIC	36-48 (LB. IN.)		SHIFT KNOB TO LEVER (FS WITH D55)
384569 KNOB	9/16-18	PLASTIC	36-48 (LB. IN.)		SHIFT KNOB TO LEVER (FS EXC D55)
3729000 STUD	13/16-16	CD STEEL OR AISI #B-1112	35-45		CLUTCH RELEASE FORK BALL STUD (SM, SM-FL-SHIFT, FS)
9409026-B(OPT)	3/8-16 x 1 1/2	GM-300M	30-35		TRANSMISSION TO FLYWHEEL (JT) (LANSING PLANT ONLY)

DATE	SYM	REVISION	DR.	CK.	DATE	SYM	REVISION	DR.	CK.	DATE	SYM	REVISION	DR.	CK.
										12-3-64	B	REVISED & REDRAWN		
										8-10-64	A	REVISED & REDRAWN	PS	

CHART—WRENCH TORQUE (TRANSMISSION)

DATE MARCH 23, 1964
DR. BY JACQUI PERKINS
CHECKED W. L. WEISS
APPR.
APPR.

FIRST USED 1965
Oldsmobile Service ILLUSTRATION
SERIES F-85
REF.
PAGE C-8.21
PART NO. 388433

OLDSMOBILE DIVISION
GENERAL MOTORS CORPORATION
LANSING, MICHIGAN

PART NUMBER	CODE
387577	VC
387017	VD
386829	VE
385972	VF
384188	VG
389066	VH
*1362549	XA
*1362550	XB

* CODE NOT CONTROLLED BY OLDSMOBILE.

C-9.1*

LAST CHANGE

389076

SEE DETAIL DRAWING FOR LOCATION OF CODE LETTERS.

DATE	SYM.	REVISION RECORD	AUTHORITY	DR.	CK.

TOLERANCES UNLESS OTHERWISE SPECIFIED ± .02 ALLOWED ON TWO PLACE DECIMALS ± .010 ALLOWED ON THREE PLACE DECIMALS.

ON ALL CASTINGS AND FORGINGS ALLOW FOR FINISH AS FOLLOWS F_1-.030; F_2-.06; F_3-.09; F_4-.12; ETC.

COMMERCIAL TOLERANCES APPLY TO SHEET METAL GAUGES, TUBING, ROLLED, DRAWN OR EXTRUDED SECTIONS AND STANDARD PARTS.

DO NOT SCALE

EFF. DATE MAY 1, 1964	DR. R. ACHTERHOF
SCALE	CK. M. Bankhart
PART USED 1965	APPR.
REFERENCE	APPR.
MATERIAL SPEC.	APPR.

NAME CHART - CODE - RADIATOR HOSE

8

PART NO. 389076

G.'0'

OLDSMOBILE

MASTER PAINT CHART: EXTERIOR

Description			Body & Sheet Metal-Acrylic Lacquer			Wheels - Enamel	
Color Code	Fisher W Number	Color Name	Rinshed-Mason Code No.	DuPont Code No.	Forbes Code No.	Rinshed-Mason Code No.	DuPont Code No.
A	848	Ebony Black	L55K011	868-96459	500-112-X	E29K001	780-76600
B	3300	Nocturne Mist	L58B030	867-97211	720-383	E29B072	781-97211
C	2661	Provincial White	L55W004	868-93774	710-178	E29W008	780-93774
D	3301	Lucerne Mist	L58B033	867-97219	720-390	E29B073	781-97219
E	3302	Royal Mist	L58B009	867-97220	720-391	E29B074	781-97220
H	3303	Laurel Mist	L58G017	867-97223	720-393	E29G044	781-97223
J	3304	Forest Mist	L58G018	867-97224	720-394	E29G045	781-97224
K	3305	Ocean Mist	L58B012	867-97217	720-388	E29B075	781-97217
L	3306	Turquoise Mist	L58B032	867-97218	720-389	E29B076	781-97218
N	3307	Burgundy Mist	L58M008	867-97213	720-385	E29M009	781-97213
R	3309	Target Red	L55R020	868-97540	710-395	E29R036	780-97214
T	3418	Mojave Mist	L58N006	867-97216	720-387	E29N039	781-97216
V	3136	Almond Beige	L55N001	868-96261	710-347	E29N034	780-96261
W	3312	Sterling Mist	L58A014	867-97212	720-384	E29A035	781-97212
Y	3313	Saffron Yellow	L55Y013	868-96908	710-396	E29Y015	780-96908

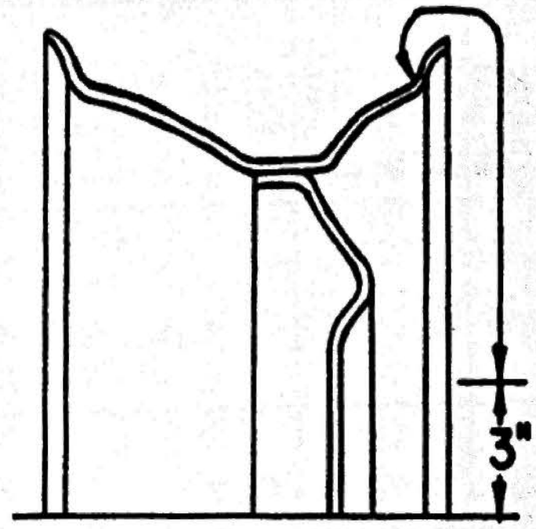

Note: Area enclosed with the arrow is to be painted wheel color with synthetic enamel. Back side of wheel, tire mounting surfaces, and within a three (3) inch radius of the wheel centerline are not to be painted although fogging is permitted.

Wheels for cars equipped with N95, P01 or P02 wheel discs are to be painted Ebony Black, RM E29K001 or DuPont 780-76600.

Wheels for cars equipped with hub caps are to be painted lower body color.

C-10.1

Added sales names and wheel enamel numbers 5-13-64.
Added note for wheels equipped with hub caps 7-31-64.

CHART: PAINT & TRIM SPECIFICATIONS	
ISSUED BY: G. T. Jones	
DATE: 2-15-64	DWG. BY: R. Dustan
SHEET NO.: 1	PART NO.: 387949

CHART: PAINT & TRIM USAGE - SOLID TONE CARS

	Body Color	Trim Colors: Black	Slate	Midnite Green	Green	Blue	Fawn	Red	Turquoise	Parchment
A	Ebony Black	X	X		X	X		X	X	X
B	Nocturne Mist		X			X				X
C	Provincial White	X	X	X	X	X	X	X	X	X
D	Lucerne Mist	X				X				X
E	Royal Mist					X				X
H	Laurel Mist			X	X					X
J	Forest Mist			X	X					X
K	Ocean Mist	X							X	X
L	Turquoise Mist	X							X	X
N	Burgundy Mist	X						X		X
R	Target Red	X						X		X
T	Mojave Mist						X			X
V	Almond Beige	X					X			X
W	Sterling Mist	X	X			X				X
Y	Saffron Yellow	X					X			X

If car is ordered with hub caps, wheel color will be the same as lower body color. Wheels will be painted Ebony Black (A) is wheel discs (N95,P01,P02) are ordered.

Revised wheel color specifications 5-13-64. Added usage for Parchment trim with T & V 7-31-64.

CHART: PAINT & TRIM SPECIFICATIONS	
ISSUED BY: G. T. Jones	
DATE: 2-15-64	DWG. BY: R. Dustan
SHEET NO.: 2	PART NO.: 387949

CHART: PAINT & TRIM USAGE - TWO TONE PAINT

Note:
Two tone paint is available only on 33327,33427,33527, 33827 and 33837 models.

Body Colors			Trim Colors: Black	Slate	Midnite Green	Green	Blue	Fawn	Red	Turquoise	Parchment
TV	Mojave Mist	Almond Beige						X			
VC	Almond Beige	Provincial White						X			X
WC	Sterling Mist	Provincial White		X							X
YT	Saffron Yellow	Mojave Mist						X			
YV	Saffron Yellow	Almond Beige						X			

Wheels will be painted Ebony Black (A) if wheel discs (N95,P01,P02) are ordered.
If car is ordered with hub caps, wheels will be painted lower body color.

C-10.5

Added sales names. Removed wheel color choice 5-13-64.

CHART: PAINT & TRIM SPECIFICATIONS	
ISSUED BY: G. T. Jones	
DATE: 2-15-64	DWG. BY: R. Dustan
SHEET NO.: 3A	PART NO.: 387949

OLDSMOBILE

MASTER TRIM CHART

1965 "A" Body

33327,69 - 33427,69

Area Code	Description	Trim Combinations					
		Slate @ 911V	Green* 902C	Blue 903C	Red 915V	Turquoise 916V	
CB 1-7	Back Perimeter & Cushion End Caps Vinyl	Med. Slate 3213-T	Med. Green 3216-T	Med. Blue 3219-T	Med. Red 3239-T	Med. Turq. 3222-T	
CB2	Seat Back Bolster Insert Vinyl - "Bedford" Pattern	Dk. Slate 3675-T	Mid. Green 3526-T	Midnite Blue 3527-T	Dark Red 3530-T	Dk. Turq. 3528-T	
CB 3-8	Seat Back & Cushion Insert Pattern Cloth "Louvain"	----	Med. Green 3417-T-165	Med. Blue 3418-T-165	----	-----	
CB 3-8	Seat Back & Cushion Insert Vinyl	Med. Slate 3213-T	----	----	Med. Red 3239-T	Med. Turq. 3222-T	
CB 10-11	Seat Facings Vinyl	Med. Slate 3213-T	Med. Green 3216-T	Med. Blue 3219-T	Med. Red 3239-T	Med. Turq. 3222-T	
FB1	Seat Back of Back Upper Vinyl - "Bedford" pattern	Dk. Slate 3675-T	Mid. Green 3526-T	Midnite Blue 3527-T	Dark Red 3530-T	Dk. Turq. 3528-T	
FB2	Seat Back of Back Center Vinyl	Med. Slate 3213-T	Med. Green 3216-T	Med. Blue 3219-T	Med. Red 3239-T	Med. Turq. 3222-T	
FB3	Seat Back of Back Lower Vinyl Coated Rayon	Dk. Slate 114-T-9265	Mid. Green 95-T-9265	Midnite Blue 96-T-9265	Dark Red 111-T-9265	Dk. Turq. 107-T-9265	
SW1	Sidewall Door and Quarter Trim Vinyl	Med. Slate 3213-T	Med. Green 3216-T	Med. Blue 3219-T	Med. Red 3239-T	Med. Turq. 3222-T	
SW2	Sidewall Door Overlay Vinyl	Dk. Slate 3214-T	Mid. Green 3218-T	Midnite Blue 3221-T	Dark Red 3241-T	Dk. Turq. 3223-T	
SW3	Sidewall Door Overlay Metcofilm	Bright	Bright	Bright	Bright	Bright	
SW6	Sidewall - Cowl Kick Pad Moulded Plastic - Madrid Grain	Dk. Slate 3318MJ	Mid. Green 3304MJ	Midnite Blue 3302MJ	Dark Red 3387MJ	Dk. Turq. 3320MJ	
H1 2-3	Headlining & Sunshade Vinyl - "Regent" Pattern	Ivory 3006-T	Lt. Green 3524-T	Light Blue 3509-T	Parchment 3668-T	Lt. Turq. 3501-T	
F1	Floor Covering Vinyl Mat	Dk. Slate 46-T-9965	Mid. Green 41-T-9965	Midnite Blue 42-T-9965	Dark Red 43-T-9965	Dk. Turq. 44-T-9965	
M4	Package Shelf Embossed K.B. Board - Madrid	Dk. Slate 836-T-4265	Mid. Green 812-T-4265	Midnite Blue 813-T-4265	Dark Red 815-T-4265	Dk. Turq. 816-T-4265	
	Upper Instrument Panel Flat Acrylic Lacquer (W0A)	Dk. Slate W3318	Mid. Green W3304	Midnite Blue W3302	Dark Red W3357	Dk. Turq. W3320	
	Lower Instrument Panel Gloss Acrylic Lacquer (W60A)	Med. Slate W3312	Med. Green W3303	Med. Blue W3301	Med. Red W3370	Med. Turq. W3305	

@ Not available on 33369 or 33469 after "X" number of jobs.
* Not Available on 3327 or 33427
V - All Vinyl Trim
C - Cloth and Vinyl Trim
All Vinyl is "Madrid Grain" unless otherwise specified.

Added T numbers for FB-3, SW-6, F-1 & M-4 5-13-64.
Corrected Dk. Red instrument panel paint number 7-31-64.
Added footnote. 11-13-64

CHART: PAINT & TRIM SPECIFICATIONS
ISSUED BY: G. T. Jones
DATE: 2-15-64 DWG. BY: R. Dustan
SHEET NO.: 4A PART NO.: 387949

Added T numbers for CB-2,8, FB-2,3, SW1-7 & M-4 5-13-64.
Corrected Dk. Red instrument panel paint number 7-31-64.

Area Code	Description	Trim Combinations					
		Green 922C	Blue 923C	Fawn 934V	Red 935V	Turquoise 936V	Parchment 937V
CB 1-7	Seat back & cushion bolster Vinyl - Madrid Grain	Med. Green 3216-T	Med. Blue 3219-T	Med. Fawn 3224-T	Med. Red 3239-T	Med. Turquoise 3222-T	Parchment 3235-T
CB 2-8	Seat back & cushion insert Cloth - "Langmuir" pattern	Midnite Green 3421-T-165	Midnite Blue 3422-T-165	----	----	----	----
CB 2-8	Seat back & cushion insert Vinyl - "Langmuir" pattern	----	----	Dk. Fawn 3535-T-9012	Dk. Red 3537-T-9012	Dk. Turquoise 3536-T-9012	Parchment 3694-T-9012
CB 11-12	Seat facings Vinyl	Med. Green 3216-T	Med. Blue 3219-T	Med. Fawn 3224-T	Med. Red 3239-T	Med. Turquoise 3222-T	Parchment 3235-T
FB1	Seat back of back, upper Vinyl	Med. Green 3216-T	Med. Blue 3219-T	Med. Fawn 3224-T	Med. Red 3239-T	Med. Turquoise 3222-T	Parchment 3235-T
FB2	Seat back of back, center Vinyl - "Bedford" pattern	Midnite Green 3526-T-9412	Midnite Blue 3527-T-9412	Dk. Fawn 3529-T-9412	Dk. Red 3530-T-9412	Dk. Turquoise 3528-T-9412	Parchment 3564-T-9412
FB3	Seat back of back, lower Vinyl Coated Rayon	Midnite Green 95-T-9265	Midnite Blue 96-T-9265	Dk. Fawn 117-T-9265	Dk. Red 111-T-9265	Dk. Turquoise 107-T-9265	Black 86-T-9265
SW1	Sidewall - doors upper trim Vinyl - "Langmuir" pattern	Midnite Green 3688-T-7012	Midnite Blue 3689-T-9012	Dk. Fawn 3690-T-7012	Dk. Red 3692-T-7012	Dk. Turquoise 3691-T-7012	Parchment 3693-T-7012
SW2	Sidewall - doors lower Carpet "Travana"	Midnite Green 1094-T-1065	Midnite Blue 1086-T-1065	Dk. Fawn 1090-T-1065	Dk. Red 1084-T-1065	Dk. Turquoise 1088-T-1065	Black 1083-T-1065
SW7	Sidewall - Cowl kick pad Molded plastic - Madrid Grain	Midnite Green 3304MJ	Midnite Blue 3302MJ	Dk. Fawn 3321MJ	Dk. Red 3387MJ	Dk. Turquoise 3320MJ	Black 848N
H 1-2	Headlining & sunshade "Regent" Vinyl	Lt. Green 3524-T	Lt. Blue 3509-T	Parchment 3668-T	Parchment 3668-T	Lt. Turquoise 3501-T	Parchment 3668-T
F1	Floor covering Carpet "Trenton"	Midnite Green 1081-T-6365	Midnite Blue 1073-T-6365	Dk. Fawn 1077-T-6365	Dk. Red 1071-T-6365	Dk. Turquoise 1075-T-6365	Black 1070-T-6365
M4	Package shelf Embossed K.B. board Madrid Grain	Midnite Green 812-T-4265	Midnite Blue 813-T-4265	Dk. Fawn 814-T-4265	Dk. Red 815-T-4265	Dk. Turquoise 816-T-4265	Black 811-T-4265
	Upper instrument panel Flat acrylic lacquer (W0A)	Midnite Green W3304	Midnite Blue W3302	Dk. Fawn W3321	Dk. Red W3357	Dk. Turquoise W3320	Black W848
	Lower instrument panel Gloss acrylic lacquer (W60A)	Med. Green W3303	Med. Blue W3301	Med. Fawn W3311	Med. Red W3370	Med. Turquoise W3305	Black W848

All vinyl is "Madrid Grain" unless otherwise specified.

CHART: PAINT & TRIM SPECIFICATIONS
ISSUED BY: G. T. Jones
DATE: 2-15-64 DWG. BY: R. Dustan
SHEET NO.: 4C PART NO.: 387949

MASTER TRIM CHART 33569-33669
OLDSMOBILE
1965 "A" Body

Area Code	Description	Trim Combinations					
		Black	Midnite Green	Blue	Fawn	Red	Parchment
		940V	942V	943V	944V	945V	947V
CB-1 7,18	Back & cushion, sides, center strip Vinyl - "Madrid" grain	Black 3200-T	Midnite Green 3218-T	Med. Blue 3219-T	Med. Fawn 3224-T	Med. Red 3239-T	Parchment 3235-T
CB10, 11	Back & cushion - facings Vinyl	Black 3200-T	Midnite Green 3218-T	Med. Blue 3219-T	Med. Fawn 3224-T	Med. Red 3239-T	Parchment 3235-T
CB2, 6,8	Seat inserts & buttons Vinyl	Black 3200-T	Midnite Green 3218-T	Med. Blue 3219-T	Med. Fawn 3224-T	Med. Red 3239-T	Parchment 3235-T
FB 1,3	Seat back of back, upper & sides Vinyl	Black 3200-T	Midnite Green 3218-T	Med. Blue 3219-T	Med. Fawn 3224-T	Med. Red 3239-T	Parchment 3235-T
FB 2	Seat back of back, center "Bedford" vinyl	Black 2882-T-9412	Midnite Green 3526-T-9412	Med. Blue 3665-T-9412	Dk. Fawn 3529-T-9412	Dk. Red 3530-T-9412	Parchment 3564-T-9412
FB 7	Seat back of back, lower Vinyl coated rayon	Black 86-T-9265	Midnite Green 95-T-9265	Midnite Blue 96-T-9265	Dk. Fawn 117-T-9265	Dk. Red 111-T-9265	Black 86-T-9265
SW 1	Sidewall - dr. & qtr., upper trim Vinyl	Black 3200-T	Midnite Green 3218-T	Med. Blue 3219-T	Med. Fawn 3224-T	Med. Red 3239-T	Parchment 3235-T
SW5, 8,9	Sidewall - dr. & qtr. armrests Vinyl	Black 3200-T	Midnite Green 3218-T	Med. Blue 3219-T	Med. Fawn 3224-T	Med. Red 3239-T	Parchment 3235-T
SW 2	Sidewall - door lower "Trevana" carpet	Black 1083-T-1065	Midnite Green 1094-T-1065	Midnite Blue 1086-T-1065	Dk. Fawn 1090-T-1065	Dk. Red 1084-T-1065	Black 1083-T-1065
SW 7	Sidewall - shrouds Moulded plastic - "Madrid" grain	Black 848N	Midnite Green 3304MJ	Midnite Blue 3302MJ	Dk. Fawn 3321MJ	Dk. Red 3387MJ	Black 848N
H1	Headlining & sunshades "Regent" vinyl	Parchment 3668-T	Parchment 3668-T	Lt. Blue 3509-T	Parchment 3668-T	Parchment 3668-T	Parchment 3668-T
M4	Package shelf K.B. board - "Madrid" grain	Black 811-T-4265	Midnite Green 812-T-4265	Midnite Blue 813-T-4265	Dk. Fawn 814-T-4265	Dk. Red 815-T-4265	Black 811-T-4265
F1	Floor covering "Trenton" carpet	Black 1070-T-6365	Midnite Green 1081-T-6365	Midnite Blue 1073-T-6365	Dk. Fawn 1077-T-6365	Dk. Red 1071-T-6365	Black 1070-T-6365
	Upper instrument panel Flat acrylic lacquer (W0A)	Black W848	Midnite Green W3304	Midnite Blue W3302	Dk. Fawn W3321	Dk. Red W3357	Black W848
	Lower instrument panel Gloss acrylic lacquer (W60A)	Black W848	Midnite Green W3304	Med. Blue W3301	Med. Fawn W3311	Med. Red W3370	Black W848

All vinyl is "Madrid" grain unless otherwise specified.

Added T numbers for FB2-7, SW7 & M4 5-13-64. Corrected "T" & "W" numbers for Red trim 7-31-64.

CHART: PAINT & TRIM SPECIFICATIONS
ISSUED BY: G. T. Jones
DATE: 2-15-64 DWG. BY: R. Dustan
SHEET NO.: 4B PART NO.: 387949

MASTER TRIM CHARTS 33527-33827 Bucket Seats

OLDSMOBILE 1965 "A" Body

Added T numbers for M-4 5-13-64. Corrected instrument panel paint numbers, combinations 954 & 955 7-31-64.

Area Code	Description	Trim Combinations					
		Black 950V	Slate 951V	Blue 953V	Fawn 954V	Red 955V	Parchment 957V
CB 1-6	Seat back & cushion end caps Vinyl - Madrid Grain	Black 3200-T	Med. Slate 3259-T	Med. Blue 3219-T	Med. Fawn 3228-T	Med. Red 3262-T	Parchment 3235-T
CB 2-7	Seat back & cushion inserts Vinyl	Black 3200-T	Med. Slate 3259-T	Med. Blue 3219-T	Med. Fawn 3228-T	Med. Red 3262-T	Parchment 3235-T
CB 8-9	Seat facings Vinyl	Black 3200-T	Med. Slate 3259-T	Med. Blue 3219-T	Med. Fawn 3228-T	Med. Red 3262-T	Parchment 3235-T
FB 1	Seat back of back - perimeter Vinyl	Black 3200-T	Med. Slate 3259-T	Med. Blue 3219-T	Med. Fawn 3228-T	Med. Red 3262-T	Parchment 3235-T
FB 2	Seat back of back, center Vinyl	Black 3200-T	Med. Slate 3259-T	Med. Blue 3219-T	Med. Fawn 3228-T	Med. Red 3262-T	Parchment 3235-T
FB 6	Seat back of back, lower Carpet "Travana"	Black 1083-T-1065	Dk. Slate 1141-T-1065	Midnite Blue 1086-T-1065	Dk. Fawn 1090-T-1065	Dk. Red 1084-T-1065	Black 1083-T-1065
SW1	Sidewall - doors & 1/4 upper trim Vinyl	Black 3200-T	Med. Slate 3259-T	Med. Blue 3219-T	Med. Fawn 3228-T	Med. Red 3262-T	Parchment 3235-T
SW2	Sidewall doors, lower Carpet "Travana"	Black 1083-T-1065	Dk. Slate 1141-T-1065	Midnite Blue 1086-T-1065	Dk. Fawn 1090-T-1065	Dk. Red 1084-T-1065	Black 1083-T-1065
SW8	Sidewall cowl kick pad "Travana" carpet over moulded plastic	Black 1083-T-1065	Dk. Slate 1141-T-1065	Midnite Blue 1086-T-1065	Dk. Fawn 1090-T-1065	Dk. Red 1084-T-1065	Black 1083-T-1065
SW 10-11	Sidewall - 1/4 arm rest & folding top wall Vinyl	Black 3200-T	Med. Slate 3259-T	Med. Blue 3219-T	Med. Fawn 3228-T	Med. Red 3262-T	Parchment 3235-T
H 1-2	Headlining & sunshade (33837) Vinyl - "Regent" pattern	Parchment 3668-T	Ivory 3006-T	Lt. Blue 3509-T	Parchment 3668-T	Parchment 3668-T	Parchment 3668-T
F1	Floor covering Carpet "Trenton"	Black 1070-T-6365	Dk. Slate 1115-T-6365	Midnite Blue 1073-T-6365	Dk. Fawn 1077-T-6365	Dk. Red 1071-T-6365	Black 1070-T-6365
M4	Package shelf (33837) Woven fiber	Black 285-T-4462	Dk. Slate 347-T-4465	Midnite Blue 336-T-4465	Dk. Fawn 337-T-4465	Dk. Red 338-T-4465	Black 285-T-4462
M2	Dust boot (33867) Vinyl	Black 3200-T	Med. Slate 3259-T	Med. Blue 3219-T	Med. Fawn 3228-T	Med. Red 3262-T	Parchment 3235-T
M3	Folding top compartment lining (33867) Vinyl	Black 3200-T	Med. Slate 3259-T	Med. Blue 3219-T	Med. Fawn 3228-T	Med. Red 3262-T	Parchment 3235-T
	Upper instrument panel Flat acrylic lacquer (W0A)	Black W848	Dk. Slate W3318	Midnite Blue W3302	Dk. Fawn W3321	Dk. Red W3357	Black W848
	Lower instrument panel Gloss acrylic lacquer (W60A)	Black W848	Med. Slate W3312	Med. Blue W3301	Med. Fawn W3311	Med. Red W3309	Black W848

All vinyl is "Madrid" grain unless otherwise specified.

MASTER TRIM CHART 33837-33867

OLDSMOBILE

1965 "A" Body

CHART: PAINT & TRIM SPECIFICATIONS

ISSUED BY: G. T. Jones

DATE: 2-15-64

DWG. BY: R. Dustan

SHEET NO.: 4G

PART NO.: 387949

OLDSMOBILE

1965 "A" Body

MASTER TRIM CHART 33855.65

Area Code	Description	Trim Combinations					
		Black	Green	Blue	Fawn	Red	Parchment
		960C	962C	963C	964V	965V	967V
CB1,2 9,10, 12	Seats - bolsters & center strip Vinyl - "Madrid" grain	Black 3200-T	Med. Green 3216-T	Med. Blue 3219-T	Med. Fawn 3224-T	Med. Red 3239-T	Parchment 3235-T
CB3, 11	Seats - inserts "Leighton" cloth	Black 3425-T-165	Midnite Green 3426-T-165	Midnite Blue 3427-T-165	----	----	----
CB 3,11	Seats - inserts Vinyl	----	----	----	Med. Fawn 3224-T	Med. Red 3239-T	Parchment 3235-T
CB4,13, 15,16	Perimeter welts & facings Vinyl	Black 3200-T	Med. Green 3216-T	Med. Blue 3219-T	Med. Fawn 3224-T	Med. Red 3239-T	Parchment 3235-T
CB5, 6,14	Insert & bolster welts Vinyl	Black 3200-T	Midnite Green 3218-T	Midnite Blue 3221-T	Dk. Fawn 3225-T	Dk. Red 3241-T	Parchment 3235-T
FB1, 4,5	Back of back - upper, sides & welts Vinyl	Black 3200-T	Med. Green 3216-T	Med. Blue 3219-T	Med. Fawn 3224-T	Med. Red 3239-T	Parchment 3235-T
FB 2	Back of back, center "Leighton" cloth	Black 3425-T-165	Midnite Green 3426-T-165	Midnite Blue 3427-T-165	----	----	----
FB 2	Back of back, center Vinyl	----	----	----	Med. Fawn 3224-T	Med. Red 3239-T	Parchment 3235-T
FB 3	Back of back, lower "Travana" carpet	Black 1083-T-1065	Midnite Green 1094-T-1065	Midnite Blue 1086-T-1065	Dk. Fawn 1090-T-1065	Dk. Red 1084-T-1065	Black 1083-T-1065
SW 1	Doors - upper & front Vinyl	Black 3200-T	Med. Green 3216-T	Med. Blue 3219-T	Med. Fawn 3224-T	Med. Red 3239-T	Parchment 3235-T
SW 2	Doors - center insert "Leighton" cloth	Black 3425-T-165	Midnite Green 3426-T-165	Midnite Blue 3427-T-165	----	----	----
SW 2	Doors - center insert Vinyl	----	----	----	Med. Fawn 3224-T	Med. Red 3239-T	Parchment 3235-T
SW 3	Doors - lower "Travana" carpet	Black 1083-T-1065	Midnite Green 1094-T-1065	Midnite Blue 1086-T-1065	Dk. Fawn 1090-T-1065	Dk. Red 1084-T-1065	Black 1083-T-1065
SW 6	Armrest pads Vinyl	Black 3200-T	Midnite Green 3218-T	Midnite Blue 3221-T	Med. Fawn 3224-T	Med. Red 3239-T	Parchment 3235-T
SW 9	Shrouds "Travana" carpet over moulded plastic	Black 1083-T-1065	Midnite Green 1094-T-1065	Midnite Blue 1086-T-1065	Dk. Fawn 1090-T-1065	Dk. Red 1084-T-1065	Black 1083-T-1065
F3	Load floor Vinyl coated sheeting	Black 113-T-5164	Midnite Green 130-T-5165	Midnite Blue 131-T-5165	Dk. Fawn 132-T-5165	Dk. Red 133-T-5165	Black 113-T-5165
SW12, 13,14	Rear quarter Vinyl	Black 3200-T	Med. Green 3216-T	Med. Blue 3219-T	Med. Fawn 3224-T	Med. Red 3239-T	Parchment 3235-T
H1	Headlining & sunshade "Regent" vinyl	Parchment 3668-T	Lt. Green 3524-T	Lt. Blue 3509-T	Parchment 3668-T	Parchment 3668-T	Parchment 3668-T
F1	Floor covering "Trenton" carpet	Black 1070-T-6365	Midnite Green 1081-T-6365	Midnite Blue 1073-T-6365	Dk. Fawn 1077-T-6365	Dk. Red 1071-T-6365	Black 1070-T-6365
	Upper instrument panel Flat acrylic lacquer (W0A)	Black W848	Midnite Green W3304	Midnite Blue W3302	Dk. Fawn W3321	Dk. Red W3387	Black W848
	Lower instrument panel Gloss acrylic lacquer (W60A)	Black W848	Med. Green W3303	Med. Blue W3301	Med. Fawn W3311	Med. Red W3370	Black W848

All vinyl is "Madrid" grain unless otherwise specified.

Added T numbers for CB3-11, FB2, SW2 & F3 5-13-64.

CHART: PAINT & TRIM SPECIFICATIONS

ISSUED BY: G. T. Jones

DATE: 2-15-64 DWG. BY: R. Dustan

SHEET NO.: 4H PART NO.: 387949

MISCELLANEOUS TRIM MATERIALS

Convertible Top Materials:

Sales Code	Top Material	Exterior Color Usage
1	White 296-T-1561	Available on all colors
2	Black 175-T-1559	Available on all colors
3	Med. Blue	Ebony Black, Nocturne Mist, Provincial White, Lucerne Mist, Royal Mist & Sterling Mist
4	Lt. Beige	Provincial White, Mojave Mist, Almond Beige, Saffron Yellow

Consoles:

"Travana" Carpet	Moulded Plastic and/or Paint	Usage 33527-33827	Usage 33837-67
Black 1083-T-1065	Black W-848	940-947	950-957
Dark Slate 1141-T-1065	Dark Slate W-3318	----	951
Midnite Green 1094-T-1065	Midnite Green W-3304	942	----
Midnite Blue 1086-T-1065	Midnite Blue W-3302	943	953
Dark Fawn 1090-T-1065	Dark Fawn W-3321	944	954
Dark Red 1084-T-1065	Dark Red W-3357	945	955

Auxiliary Floor Mats:

Color	Trim Combinations
Black	300,307,917,930,937,940,947,950,957,960,967
Dark Slate	911,951
Midnite Green	302,902,922,932,942,962
Midnite Blue	303,903,913,923,933,943,953,963
Dark Fawn	304,914,934,944,954,964
Dark Red	915,935,945,955,965
Dark Turquoise	916,936

Added sales codes & color usage for convertible tops.
Added trims 917 & 937 to Black auxiliary mat usage 5-13-64.

CHART: PAINT & TRIM SPECIFICATIONS	
ISSUED BY: G. T. Jones	
DATE: 2-15-64	DWG. BY: R. Dustan
SHEET NO.: 5	PART NO.: 387949

MISCELLANEOUS PARTS REQUIREMENTS

The parts listed above each chart will be required in the colors shown and used according to the outline in the chart.

Front & Rear Door Inner Panel (W60A)
Rear Quarter Inner Panel (W60A)
Garnish Mouldings (W60A)
W/S Pillar Inner Side Frame (W60A)
Door Window Frames (Sedans) (W60A)
Center Pillar (W60A)

Series & Style		Colors and Trim Usage								
		Black W848	Med. Slate W3312	Parchment W2921	Midnite Green W3304	Med. Green W3303	Med. Blue W3301	Med. Fawn W3311	Med. Red Met. W3706 / Red W3309*	Med. Turquoise W3305
33400	33469		911+			902	903		@915	916
	33427		911				903		@915	916
	33435-33455-33465			917			913	914	@915	
33527 33827	33527-33827 (Bench Seat)	300		307		302	303	304		
	33527-33827 (Bucket Seat)	940		947	942		943	944	@945	
33600	33669			937		922	923	934	@935	936
	33635	930				932	933	934	@935	
33800 exc. 33827	33837-33867	950	951	957			953	954	*955	
	33855-33865	960		967		962	963	964	@965	

Note:
Cover - Radio Hole 383381 Paint Argent Silver; Rinshed-Mason E28Z005. (Code 301)
Cover - Heater Control Hole 383382 Paint Argent Silver; Rinshed-Mason E28Z005. (Code 301)
Door - Ash Tray 588740 Paint Argent Silver; Rinshed-Mason E28Z005. (Code 301)

C-10.17

+ Trim to be canceled after stock on hand is depleted.

Added ash tray door, clarified Red & Red Metallic paint usage 5-13-64. Corrected "W" number for Midnite Green 7-31-64. Added footnote. 11-13-64

CHART: PAINT & TRIM SPECIFICATIONS	
ISSUED BY: G. T. Jones	
DATE: 2-15-64	DWG. BY: R. Dustan
SHEET NO.: 6A	PART NO.: 387949

G.M. MATERIAL SPEC	QUANTITY	DESCRIPTION	USAGE	APPROVED SOURCES (APPROVED MAKE ONLY MUST BE USED)
9985000		THREAD SEALER	1. TRANSMISSION OIL COOLER RADIATOR CONNECTORS - WITH 35C60	DUPONT PASTE - 563-4012 OR P.O.B. 83
9985002		ENGINE OIL	1. APPLY TO ALL FRICTION & BEARING SURFACES ON THE THROTTLE CONTROL	
9985003	2 PINTS 2.25 PINTS	OIL - SM.	1. FILL THRU FILLER PLUG OF SM. TRANSMISSION 2. FILL THRU FILLER PLUG OF F.S. TRANSMISSION	
9985004	3.0 PINTS	OIL-DIFFERENTIAL	1. FILL FOR ALL STANDARD DIFFERENTIALS TO BOTTOM OF FILLER PLUG HOLE	1. THE TEXAS CO. 2. STUART OIL CO.
9985026	9.0 PINTS	HYDRAULIC FLUID	1. FILL FOR F.S. TRANSMISSION - THROUGH FILLER TUBE (9.5 PINTS FURNISHED IN TRANSMISSION AS PURCHASED - TOTAL USAGE 18.5 PINTS) SEE DRAWING 386200 FOR FILL SPECIFICATIONS 2. LUBRICATE SPEEDOMETER DRIVEN GEAR SHAFT & SEAL AT ASSEMBLY	1. THE TEXAS CO. TL-3528-A 2. CITIES SERVICE CSR-1-26-A 3. SUN OIL - 302903
9985035	3.0 PINTS	OIL-DIFFERENTIAL	1. FILL FOR ALL LOCKING TYPE DIFFERENTIALS TO BOTTOM OF FILLER PLUG HOLE.	THE TEXAS CO. TL-3450
9985038		EXTREME PRESSURE GREASE	1. APPLY TO ALL FRICTION & BEARING SURFACES OF SHIFT CONTROL LINKAGE 2. APPLY TO ALL FRICTION & BEARING SURFACES OF CLUTCH CONTROL LINKAGE 3. APPLY TO CLUTCH PEDAL PIVOT AND PUSH ROD END PRIOR TO ASSEMBLY 4. APPLY TO CLUTCH EQUALIZER AT ASSEMBLY 5. APPLY TO SHIFT LEVER AND SPRING IN SHIFT BOWL	HUMBLE ESSO WS 3794 GREASE
9985092		LITHIUM-MAHOGANY SOAP GREASE	1. APPLY TO INNER & OUTER LIPS OF S.M. & F.S. TRANSMISSION REAR OIL SEAL BEFORE ASSEMBLY OF PROP SHAFT.	STANDARD OIL IND. 66466
9981117		SILICONE LUBE	1. APPLY TO ACCELERATOR PEDAL HOLES PRIOR TO ASSEMBLY TO STUDS 2. APPLY TO TRANSMISSION OIL INDICATOR RUBBER SEAL PRIOR TO ASSEMBLY TO INDICATOR TO FILLER TUBE.	HOWARD PROD. CO. HP-LE-41
N.P.N.	.0802 OZ.	HIGH TEMP GREASE	1. FILL RECESS ON I.D. OF CLUTCH RELEASE BEARING 2. APPLY ON CLUTCH CONTROL THROWOUT YOKE BALL STUD	TEXACO NO. 1999

DATE	SYM.	REVISION RECORD	AUTHORITY	DR.	CK.
8-30-63	B	REVISED & RETYPED	P-AAW	JP	Np
10-21-63	C	MOBIL OIL CO REMVD		[illegible]	Np
10-21-63	D	"TO BOTTOM OF FILLER PLUG HOLE" ADDED			
10-21-63	E	WAS OTHER SERVICE		[illegible]	Np
10-21-63	F	3.0 WAS 2.75 PINTS		[illegible]	Np
10-21-63	G	NOTE ADDED		[illegible]	[illegible]
10-21-63	H	WAS "SUNAMATIC 116"	P-AAW	[illegible]	[illegible]
1-15-64	J	LINE "2" ADDED	P-AGE	[illegible]	Np
3-3-64	K	OIL DESCRIPTION ADDED		[illegible]	Np
3-3-64	L	GROUP REVISED		[illegible]	Np
	M				

NO. 383833
LAST CHANGE L

OLDSMOBILE DIVISION
GENERAL MOTORS CORPORATION
LANSING, MICHIGAN

TOLERANCES UNLESS OTHERWISE SPECIFIED ± .02 ALLOWED ON TWO PLACE DECIMALS ± .010 ALLOWED ON THREE PLACE DECIMALS
ON ALL CASTINGS AND FORGINGS ALLOW FOR FINISH AS FOLLOWS F_1-.030; F_2-.06; F_3-.09; F_4-.12 ETC.
COMMERCIAL TOLERANCES APPLY TO SHEET METAL GAUGES, TUBING, ROLLED, DRAWN OR EXTRUDED SECTIONS & STANDARD PARTS

DO NOT SCALE

DATE DWG. MARCH 7, 1963	DR. NANCY WERNER
SCALE	CK. H. PAGE
FIRST USED 1964	APPR. [illegible]
	APPR.
REFERENCE	APPR. [illegible]
MATERIAL SPEC. "TRANSMISSION"	
NAME CHART-LUBRICANTS & PROCESS MATERIALS	
	PART NO. 383833

NO. 383833
LAST CHANGE L

GEP 0 1964-300-2 12

DATE	SYM.	REVISION RECORD	APPROVED	DR.	CK.
2-3-64		HAS XC-78324		HO	[illegible]
6-26-64	A	NOTE ADDED	AFS	[illegible]	WJ
8-28-64	B	NOTE ADDED	P-RS	CM	[illegible]
9-1-64	C	NOTE ADDED		HO	HO

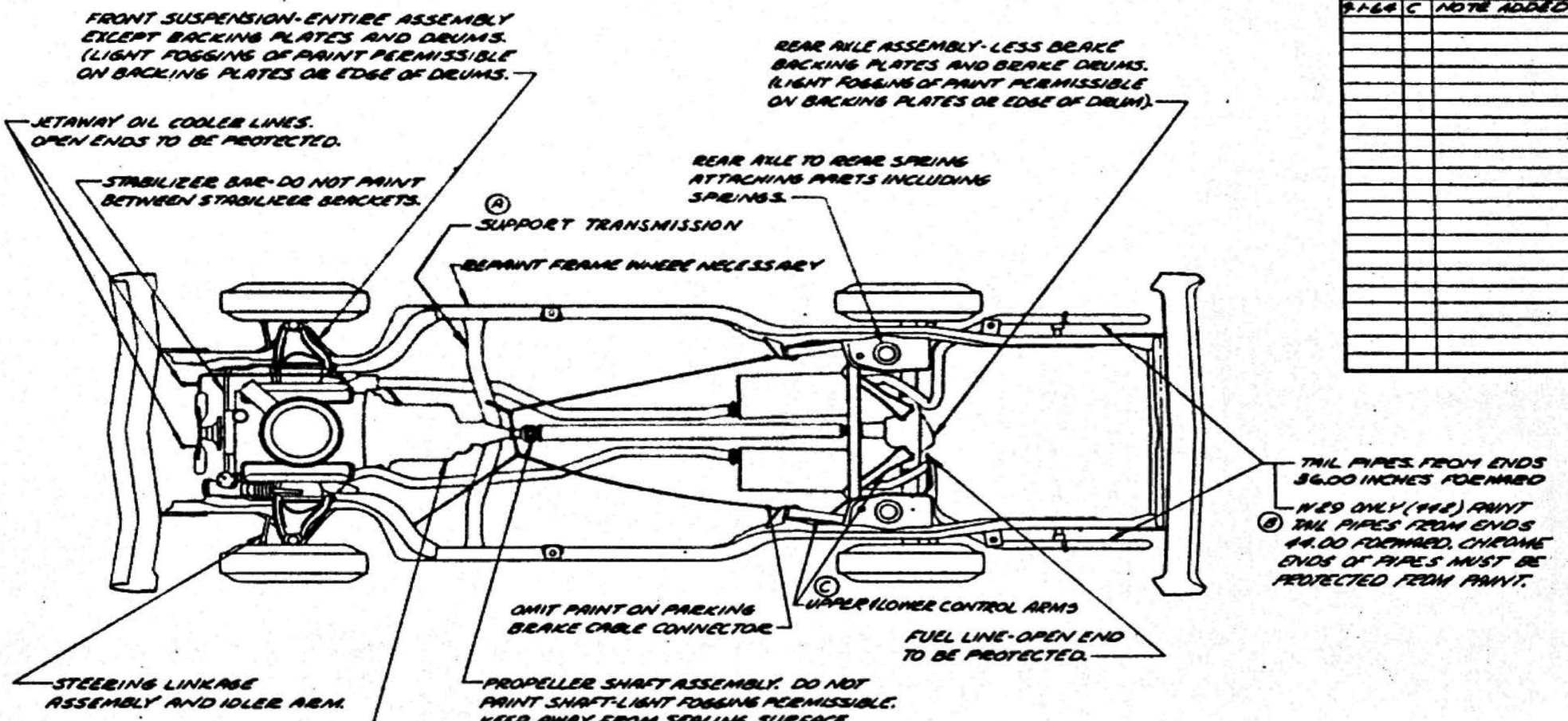

FRONT AND REAR SHOCK ABSORBER PISTON RODS MUST BE FREE OF PAINT.

FINISH - PER OLDSMOBILE PAINT SPECIFICATION 386230.
CLASS G
SURFACE PREPARATION 000
PRIMER 000
COLOR COAT COVE 310

ALL OTHER PARTS NOT SPECIFICALLY COVERED ARE TO BE FINISHED AS PRESENTLY SPECIFIED EITHER BY PAINTING OR PLATING AND THOSE NOT DESIGNATED FOR FINISH ARE NOT TO BE PAINTED; FOR EXAMPLE, THE STEERING GEAR HOUSING IS NOT PAINTED.

NO. 387794
LAST CHANGE C

TOLERANCES UNLESS OTHERWISE SPECIFIED ± .01 ALLOWED ON TWO PLACE DECIMALS ± .010 ALLOWED ON THREE PLACE DECIMALS
ON ALL CASTINGS AND FORGINGS ALLOW FOR FINISH AS FOLLOWS F_1-.000; F_2-.06; F_3-.09; F_4-.12 ETC.
COMMERCIAL TOLERANCES APPLY TO SHEET METAL GAUGES, TUBING, ROLLED, DRAWN OR EXTRUDED SECTIONS & STANDARD PARTS

DO NOT SCALE

DATE JAN 21, 1963	DR. U. N. AMES
SCALE	CK. N. JOHNSTON
PART USED 1965	APPR. [illegible]
	APPR.
REFERENCE	APPR.
MATERIAL SPEC.	

NAME: CHART-PAINT-CHASSIS ASSEMBLY

P.I. C — PART NO. 387794

OLDSMOBILE DIVISION
GENERAL MOTORS CORPORATION
LANSING, MICHIGAN

F-85

C-17.1

NO. 387794 LAST CHANGE C

OLDSMOBILE DIVISION

GENERAL MOTORS CORPORATION
LANSING — MICHIGAN

TRANSMISSION TYPE	AXLE RATIO	REAR TIRES SIZE	REAR TIRES REVS/MI @ 60 MPH	N/V	SPEEDO DRIVE GEAR PART NO.	SPEEDO DRIVE GEAR TEETH	SPEEDO DRIVEN GEAR TEETH	SPEEDO DRIVEN GEAR ASSY PART NO.	SPEEDO DRIVEN GEAR PART NO.	SPEEDO DRIVEN GEAR COLOR	ADAPTER RATIO	DESIRED RATIO	DRIVE RATIO	% ERROR @ 60 MPH
6 CYLINDER AUTOMATIC	3.08	6.95-14	815	41.84	1359238 (28 PITCH)	16	40		1362048	BLACK	NONE	2.5104	2.5000	+ .42
		7.35-14	800	41.07			39		1359273	BROWN	NONE	2.4642	2.4375	+ 1.10
		7.75-14	775	39.78			38		1359272	BLUE	NONE	2.3868	2.3750	+ .50
		7.75-15	754	38.71			37		1359271	RED	NONE	2.3226	2.3120	+ .46
	3.23	6.95-14	815	43.87	1359238	16	42		1362049	GREEN	NONE	2.6322	2.6250	+ .27
		7.35-14	800	43.07			41		1362195	YELLOW	NONE	2.5842	2.5625	+ .85
		7.75-14	775	41.72			40		1362048	BLACK	NONE	2.5032	2.5000	+ .13
		7.75-15	754	40.59			38		1359273	BROWN	NONE	2.4354	2.3750	+ 2.54
	3.55	6.95-14	815	48.22	1359238	16	39		(A) 1359273	BROWN	.8653	2.8169	2.8169	+ 2.71
		7.35-14	800	47.33			39		(B) 1359273	BROWN	.8653	2.8169	2.8169	+ .81
		7.75-14	775	45.85			43		1362196	PURPLE	NONE	2.7510	2.6870	+ 2.38
		7.75-15	754	44.61			42		1362049	GREEN	NONE	2.6766	2.6250	+ 1.97
	3.90	6.95-14	815	52.98	1359238	16	43		1362196	PURPLE	.8653	3.1788	3.1053	+ 2.37
		7.35-14	800	52.00			43		1362196	PURPLE	.8653	3.1200	3.1053	+ .47
		7.75-14	775	50.38			41		1362195	YELLOW	.8653	3.0228	2.9614	+ 2.07
		7.75-15	754	49.01			40		1362048	BLACK	.8653	2.9406	2.8900	+ 1.75
8 CYLINDER AUTOMATIC	2.78	7.35-14	800	37.07	1359239 (28 PITCH)	17	37		(D) 1359271	RED	NONE	2.2242	2.1764	+ 2.19
		7.75-14	775	35.91			36		1359270	WHITE	NONE	2.1546	2.1176	+ 1.75
		7.75-15	754	34.94			36		1359270	WHITE	NONE	2.0964	2.1176	- 1.00
	3.08 (G)	7.35-14	800	41.07	1359239	17	41		1362195	YELLOW	NONE	2.4642	2.4117	+ 2.18
		7.75-14	775	39.78			40		1362048	BLACK	NONE	2.3868	2.3529	+ 1.44
		8.25-14	761	39.06			39		1359273	BROWN	NONE	2.3436	2.2941	+ 2.11
		7.75-15	754	38.71			39		1359273	BROWN	NONE	2.3226	2.2941	+ 1.24
	3.23 (G)	7.35-14	800	43.07	1359239	17	43		1362196	PURPLE	NONE	2.5842	2.5294	+ 2.17
		7.75-14	775	41.72			42		1362049	GREEN	NONE	2.5032	2.4705	+ 1.32
		8.25-14	761	40.97			41		1362195	YELLOW	NONE	2.4582	2.4117	+ 1.89
		7.75-15	754	40.59			41		1362195	YELLOW	NONE	2.4354	2.4117	+ .98
	3.55 (G)	7.35-14	800	47.33	1359239	17	41		1362195	YELLOW	.8653	2.8398	2.7871	+ 1.89
		7.75-14	775	45.85			40		1362048	BLACK	.8653	2.7510	2.7192	+ 1.17
		8.25-14	761	45.03			39		1359273	BROWN	.8653	2.7018	2.6512	+ 1.87
		7.75-15	754	44.61			39		1359273	BROWN	.8653	2.6766	2.6512	+ .96
	3.90	7.35-14	800	52.00	1359239	17	40		1362048	BLACK	.7692	3.1200	3.0589	+ 2.00
		7.75-14	775	50.38			39		1359273	BROWN	.7692	3.0228	2.9824	+ 1.35
		7.75-15	754	49.01			38		1359272	BLUE	.7692	2.9406	2.9059	+ 1.19
	4.11	7.35-14	800	54.80	1359239	17	42		1362049	GREEN	.7692	3.2880	3.2118	+ 2.37
		7.75-14	775	53.09			41		1362195	YELLOW	.7692	3.1854	3.1353	+ 1.60
		7.75-15	754	51.65			40		1362048	BLACK	.7692	3.0990	3.0589	+ 1.31
	4.33	7.35-14	800	57.73	1354239	17	43		1362196	PURPLE	.7692	3.4638	3.2884	+ 5.33
		7.75-14	775	55.93			43		1362196	PURPLE	.7692	3.3558	3.2884	+ 2.05
		7.75-15	754	54.41			42		1362049	GREEN	.7692	3.2646	3.2118	+ 1.64

.7692-ADAPTER 535615 (YELLOW) .8653-ADAPTER 535617 (BLUE) (E)

DATE	SYM	REVISION	DR.	CK.	DATE	SYM	REVISION	DR.	CK.	DATE	SYM	REVISION	DR.	CK.
										[illegible]	E	1.1250 ADAPTER REMOVED	[illegible]	[illegible]
										[illegible]	D	1359271 WAS 1359270	[illegible]	[illegible]
										12-3-64	C_{10}	SPEEDO GEAR REVISED	[illegible]	JP
					6-11-65	G_3	8.25-14 ADDED	JJ	[illegible]	12-3-64	B_9	NONE WAS 1.125	[illegible]	JP
					2-28-64	A_{22}	1359273 WAS 1362196	[illegible]	[illegible]	12-3-64	A_8	NONE WAS .8653	[illegible]	JP

CHART - SPEEDOMETER GEAR INFORMATION

DATE OCT. 15, 1964
DR. BY J. D. SMITH
CHECKED R. PIERCE
APPR. R. C. SIEMPEL
APPR.

FIRST USED 1965
Oldsmobile Graphic ILLUSTRATION
SERIES F-85
REF.
PAGE C-18.1
PART NO. 387956

OLDSMOBILE DIVISION

GENERAL MOTORS CORPORATION
LANSING — MICHIGAN

TRANSMISSION TYPE	AXLE RATIO	REAR TIRES SIZE	REAR TIRES REVS/MI @ 60 MPH	N/V	SPEEDO DRIVE GEAR PART NO.	SPEEDO DRIVE GEAR TEETH	SPEEDO DRIVEN GEAR TEETH	SPEEDO DRIVEN GEAR ASSY PART NO.	SPEEDO DRIVEN GEAR PART NO.	SPEEDO DRIVEN GEAR COLOR	ADAPTER RATIO	DESIRED RATIO	DRIVE RATIO	% ERROR @ 60 MPH
3 SPEED SMT	3.08	6.95-14	815	41.84	3708144	8	20		3860343	BLUE	NONE	2.5104	2.5000	+ .42
	Ⓒ	7.35-14	800	41.07	(28 PITCH)		19		3860342	NATURAL	NONE	2.4642	2.3750	+ 3.75
		7.75-14	775	39.78			19		3860342	NATURAL	NONE	2.3868	2.2750	+ .50
		8.25-14	761	39.06			18		3860341	BROWN	NONE	2.3436	2.2500	+ 3.99
		7.75-15	754	38.71			18		3860341	BROWN	NONE	2.3226	2.2500	+ 3.23
	3.23	6.95-14	815	43.87	3708144	8	21		3860344	RED	NONE	2.6322	2.6250	+ .27
	Ⓒ	7.35-14	800	43.07			20		3860343	BLUE	NONE	2.5842	2.5000	+ 3.37
		7.75-14	775	41.72			20		3860343	BLUE	NONE	2.5032	2.5000	+ .13
		8.25-14	761	40.97			19		3860342	NATURAL	NONE	2.4582	2.3750	+ 3.38
		7.75-15	754	40.59			19		3860342	NATURAL	NONE	2.4354	2.3750	+ 2.52
	3.55	6.95-14	815	48.22	3708144	8	20		3860343	BLUE	.8653	2.8932	2.8900	+ .11
	Ⓒ	7.35-14	800	47.33	Ⓐ 9777230*		19		3860342	NATURAL	.8653	2.8398	2.7450	+ 3.45
		7.75-14	775	45.85			19		3860342	NATURAL	.8653	2.7510	2.7450	+ .22
		8.25-14	761	45.03			21		3860344	RED	NONE	2.7018	2.6250	+ 2.84
		7.75-15	754	44.61			18		3860344	RED	NONE	2.6766	2.6250	+ 1.97
	3.90	6.95-14	815	52.98	3708144	8	19		3860342	NATURAL	.7692	3.1788	3.0876	+ 2.95
		7.35-14	800	52.00	Ⓐ 9777230*		19		3860342	NATURAL	.7692	3.1200	3.0876	+ 1.05
		7.75-14	775	50.38			18		3860341	BROWN	.7692	3.0228	2.9250	+ 3.34
		7.75-15	754	49.81			18		3860341	BROWN	.7692	2.9406	2.9250	+ .53
	4.11	7.35-14	800	54.80	3708144	8	20		3860343	BLUE	.7692	3.2880	3.2501	+ 1.17
		7.75-14	775	53.09	Ⓐ 9777230*		19		3860342	NATURAL	.7692	3.1854	3.0876	+ 3.18
		7.75-15	754	51.65			19		3860342	NATURAL	.7692	3.0990	3.0876	+ .42
	4.33	7.35-14	800	57.73	3708144	8	21		3860344	RED	.7692	3.4638	3.4126	+ 1.50
* 9777230 WITH M-13 & M-14 TRANS.		7.75-14	775	55.93	Ⓐ 9777230*		20		3860343	BLUE	.7692	3.3558	3.2501	+ 3.25
		7.75-15	754	54.41			20		3860343	BLUE	.7692	3.2646	3.2501	+ .45
4 SPEED SMT (STANDARD RATIO) M-20	3.08	6.95-14	815	41.84	3708144	8	20		3860343	BLUE	NONE	2.5104	2.5000	+ .42
	Ⓒ	7.35-14	800	41.07	(28 PITCH)		19		3860342	NATURAL	NONE	2.4642	2.3750	+ 3.75
		7.75-14	775	39.78			19		3860342	NATURAL	NONE	2.3868	2.3750	+ .50
		8.25-14	761	39.06			18		3860341	BROWN	NONE	2.3436	2.2500	+ 3.99
		7.75-15	754	38.71			18		3860341	BROWN	NONE	2.3226	2.2500	+ 3.23
	3.23	6.95-14	815	43.87	3708144	8	21		3860344	RED	NONE	2.6322	2.6250	+ .27
	Ⓒ	7.35-14	800	43.07			20		3860343	BLUE	NONE	2.5842	2.5000	+ 3.37
		7.75-14	775	41.72			20		3860343	BLUE	NONE	2.5032	2.5000	+ .13
		8.25-14	761	40.97			19		3860342	NATURAL	NONE	2.4582	2.3750	+ 3.38
		7.75-15	754	40.59			19		3860342	NATURAL	NONE	2.4354	2.3750	+ 2.52
4 SPEED SMT (CLOSE RATIO) M-21	3.55	6.95-14	815	48.22	3708145	8	23		3860346	BLACK	NONE	2.8932	2.8750	+ .63
		7.35-14	800	47.33	(30 PITCH)		22		3860345	GREEN	NONE	2.8398	2.7500	+ 3.26
		7.75-14	775	45.85			22		3860345	GREEN	NONE	2.7510	2.7500	0
		7.75-15	754	44.61			22		3860345	GREEN	NONE	2.6766	2.750	- 2.67
	3.90	6.95-14	815	52.98	3708145	8	25		3860348	ORANGE	NONE	3.1788	3.1250	+ 1.72
		7.35-14	800	52.00			24		3860347	YELLOW	NONE	3.1200	3.0000	+ 4.00
		7.75-14	775	50.38			24		3860347	YELLOW	NONE	3.0228	3.0000	+ .76
		7.75-15	754	49.0			23		3860346	BLACK	NONE	2.9406	2.8750	+ 2.28
	4.11	7.35-14	800	54.80	3708145	8	25		3860348	ORANGE	NONE	3.2880	3.1250	+ 5.21
		7.75-14	775	53.09			25		3860348	ORANGE	NONE	3.1854	3.1250	+ 1.93
		7.75-15	754	51.65			24		3860347	YELLOW	NONE	3.0990	3.0000	+ 3.30
	4.33	7.35-14	800	57.73	3708145	8	25		3860348	ORANGE	NONE	3.4638	3.1250	+ 10.84
		7.75-14	775	55.93			25		3860348	ORANGE	NONE	3.3558	3.1250	+ 7.38
		7.75-15	754	54.41			25		3860348	ORANGE	NONE	3.2646	3.1250	+ 4.48

.7692-ADAPTER 535615 (YELLOW) .8653-ADAPTER 535617 (BLUE) Ⓑ

DATE	SYM	REVISION	DR.	CK.	DATE	SYM	REVISION	DR.	CK.	DATE	SYM	REVISION	DR.	CK.
										6-11-65	C_8	0.25-14 ADDED	JJ	KG
										2-16-65	B	NOTE REMOVED		
										1-4-65	A_8	9777230 ADDED		

CHART - SPEEDOMETER GEAR INFORMATION

DATE OCT. 15, 1964
DR. BY J. D. SMITH
CHECKED R. PIERCE
APPR. L. C. STEMPEL
APPR.

FIRST USED 1965
Oldsmobile Service ILLUSTRATION
SERIES F-85
REF.
PAGE C-18.2
PART NO. 387956

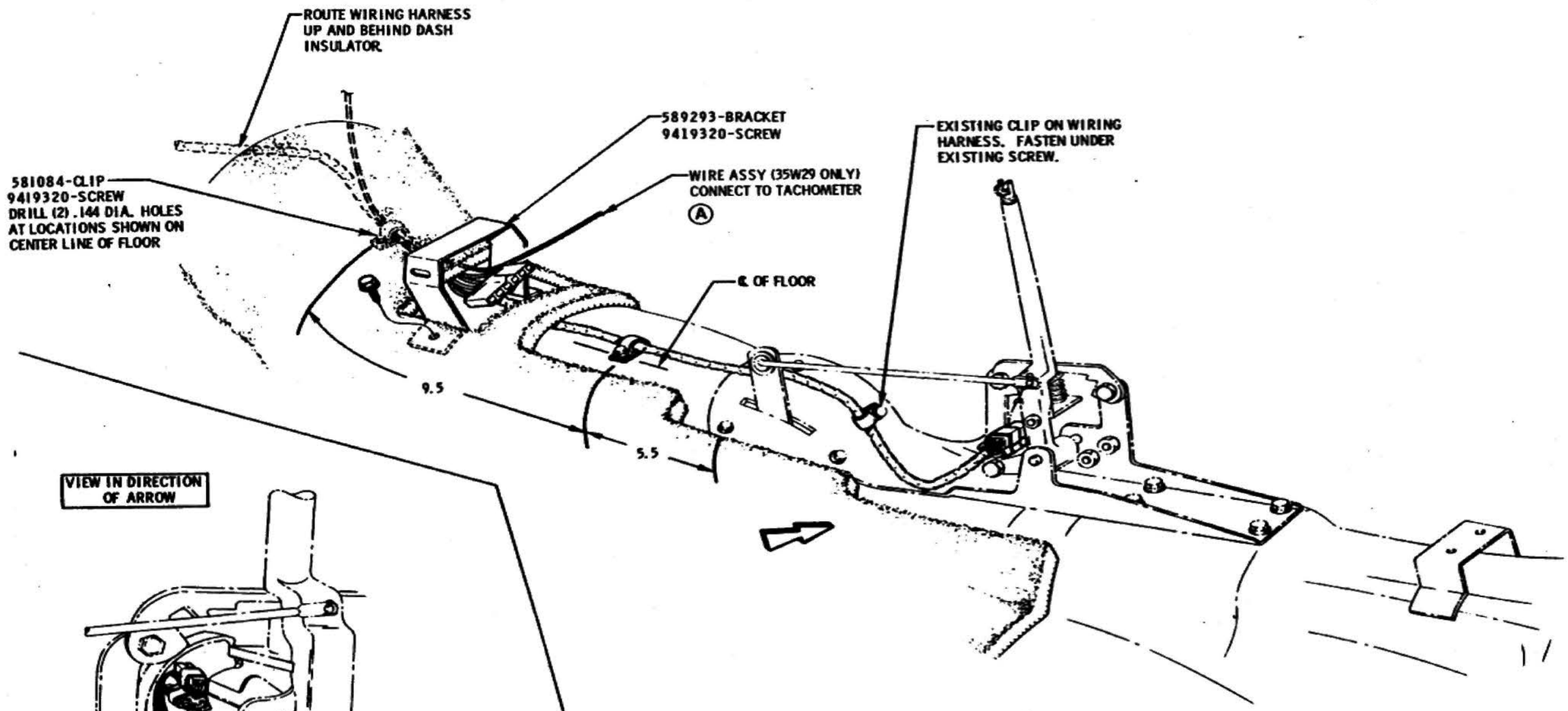

POSITION SHIFT LEVER IN DRIVE DETENT. ALIGN SLOT IN CONTACT SUPPORT WITH HOLE IN SWITCH BRACKET USING AN .090 PIN. PLACE THE CONTACT SUPPORT DRIVE SLOT OVER THE NEUTRAL SAFETY SWITCH LEVER. TIGHTEN MOUNTING SCREWS. REMOVE GAUGE PIN.

DATE	SYM	REVISION	DR.	CK.	DATE	SYM	REVISION	DR.	CK.	DATE	SYM	REVISION	DR.	CK.
										2-12-65	A	NOTE ADDED		UD

INSTALLATION	CONSOLE–JETAWAY TRANSMISSION		
DATE JAN. 4, 1964	FIRST USED 1965	Oldsmobile GRAPHIC ILLUSTRATION	PAGE 1-2.3
DR. BY C.E. MAY			
CHECKED H. VAN PELT	SERIES F85	REF. 35/M35	PART NO. 387269
APPR.			
APPR.			

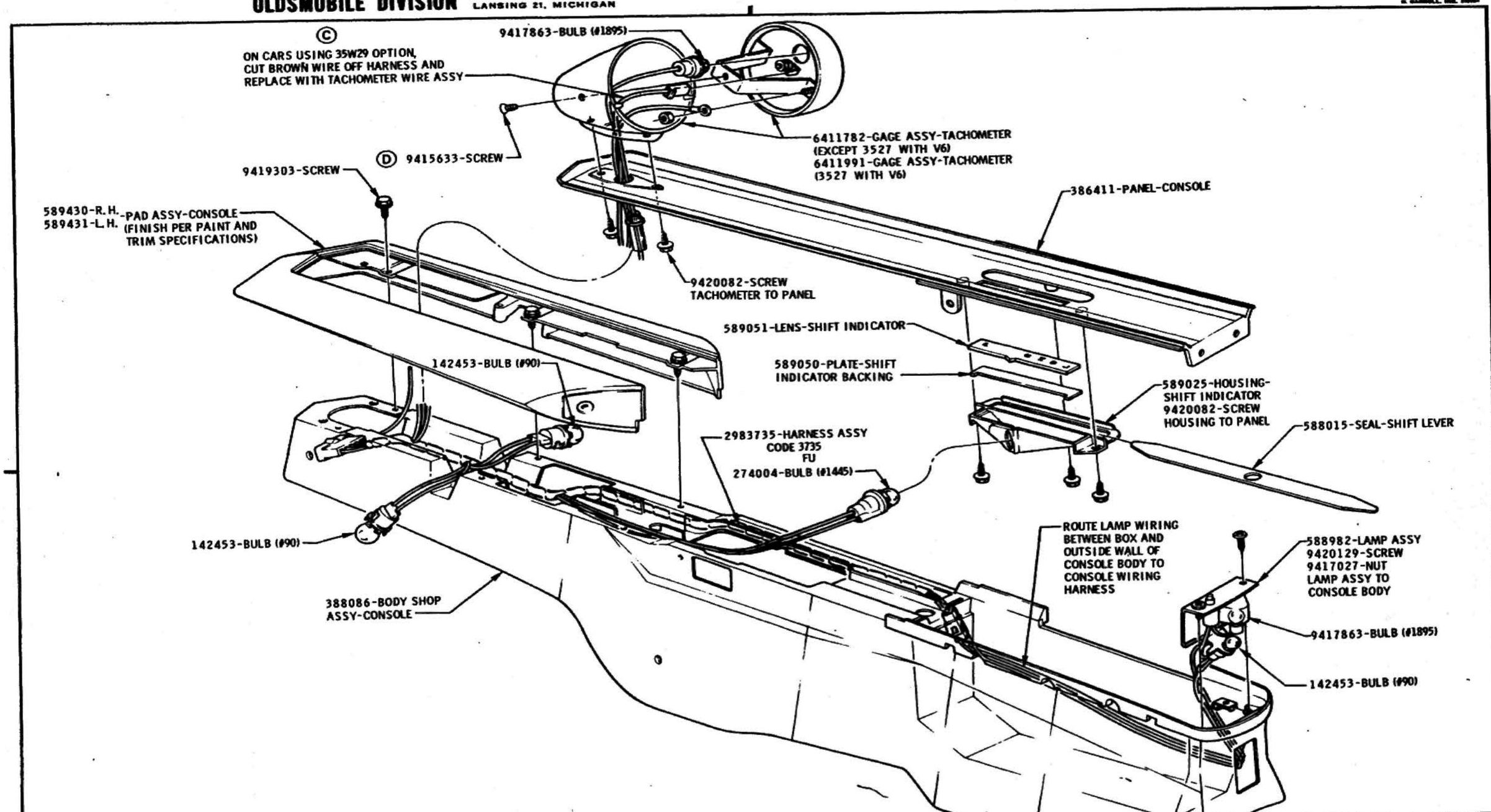

DATE	SYM	REVISION	DR.	CK.	DATE	SYM	REVISION	DR.	CK.	DATE	SYM	REVISION	DR.	CK.
										3-19-65	D	9415633 SCREW WAS 168584	JS	VP
										2-12-65	C	NOTE ADDED	JS	VP
										7-14-64	B	CODE ADDED	JV	VP
										3-6-64	A	WAS 589692 SHOP ASSY	JB	VP

INSTALLATION	CONSOLE—JETAWAY TRANSMISSION		
DATE JAN. 2, 1964	FIRST USED 1965	Oldsmobile GRAPHIC ILLUSTRATION	PAGE 1-2.4
DR. BY C. E. MAY			
CHECKED H. VAN PELT	SERIES F85	REF. 55055	PART NO. 387269
APPR.			
APPR.			

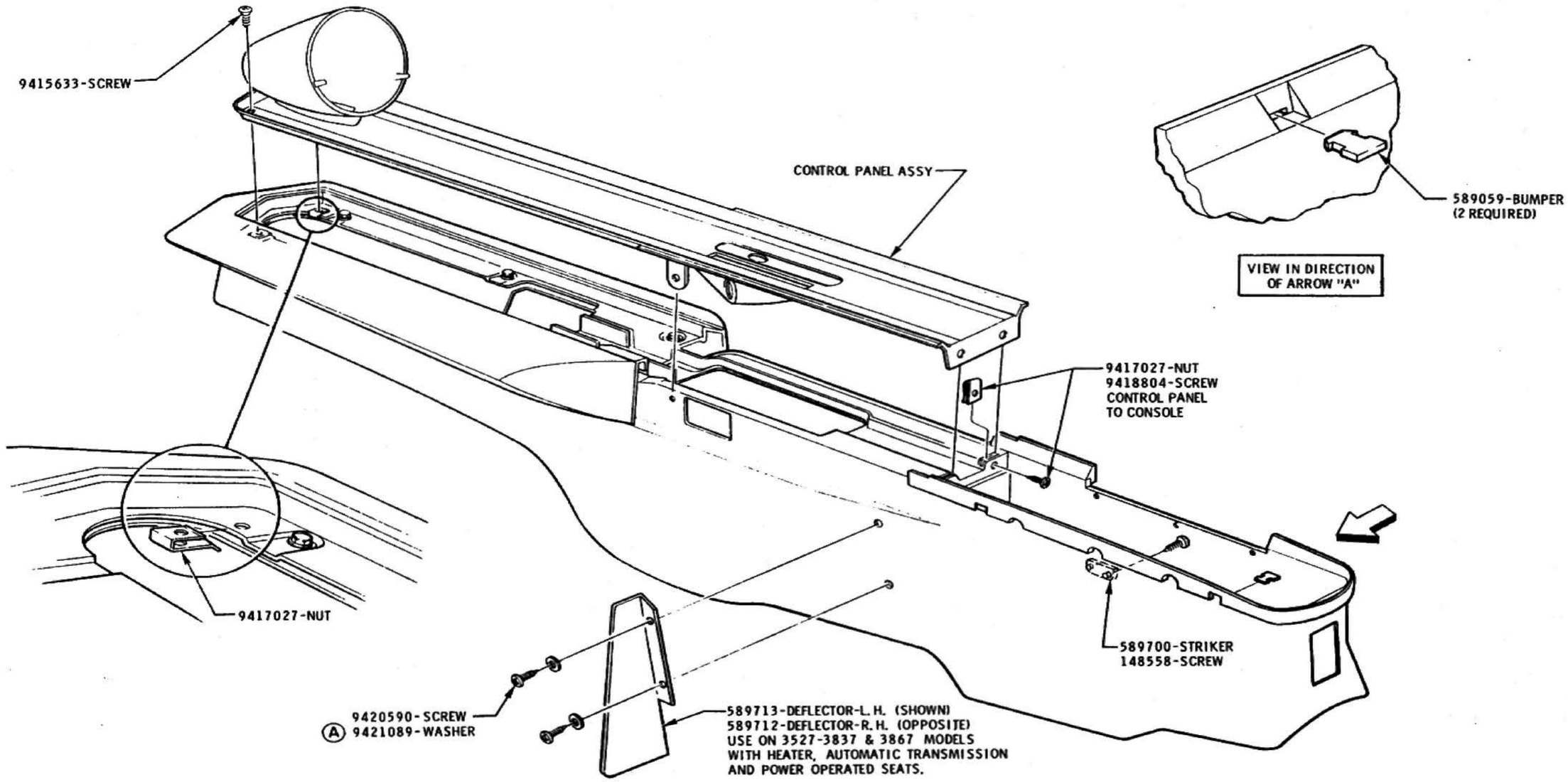

CONTROL PANEL TO CONSOLE BODY
AND AIR DEFLECTOR INSTALLATION

DATE	SYM	REVISION	DR.	CK.	DATE	SYM	REVISION	DR.	CK.	DATE	SYM	REVISION	DR.	CK.
										2-24-64	A	9421089 WAS 118676		

INSTALLATION	CONSOLE-JETAWAY TRANSMISSION		
DATE JAN. 4, 1964	FIRST USED 1965	Oldsmobile GRAPHIC ILLUSTRATION	PAGE 1-2.5
DR. BY C.E. MAY			
CHECKED H. VAN PELT	SERIES F85	REF. 35055	PART NO. 387269
APPR.			
APPR.			

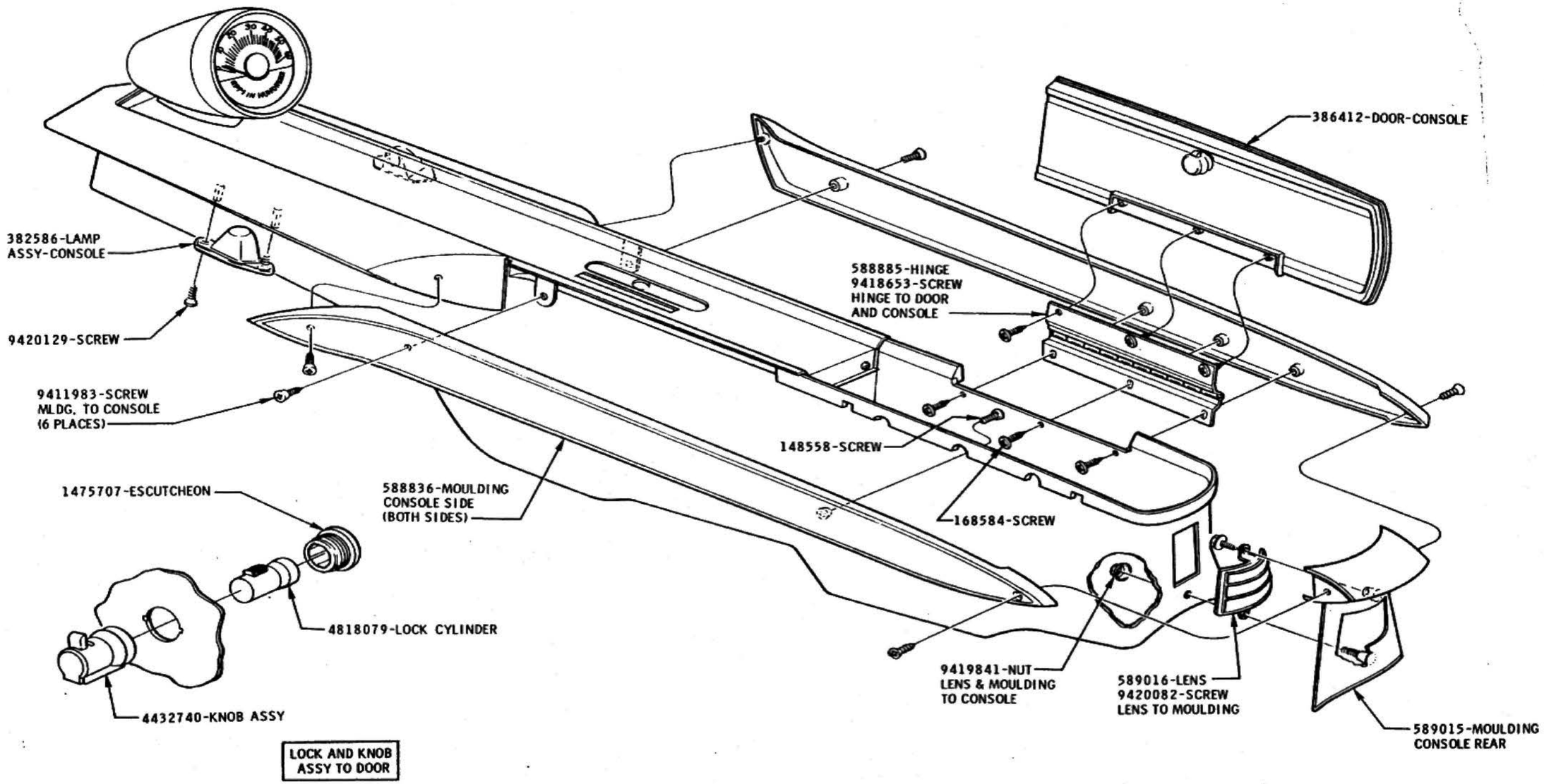

DATE	SYM	REVISION	DR.	CK.	DATE	SYM	REVISION	DR.	CK.	DATE	SYM	REVISION	DR.	CK.

INSTALLATION	CONSOLE-JETAWAY TRANSMISSION		
DATE JAN. 4, 1964	FIRST USED 1965	Oldsmobile GRAPHIC ILLUSTRATION	PAGE 1-2.6
DR. BY C.E. MAY			
CHECKED H. VAN PELT	SERIES F85	REF. 35055	PART NO. 387269
APPR.			
APPR.			

R. CARROLL, INC.

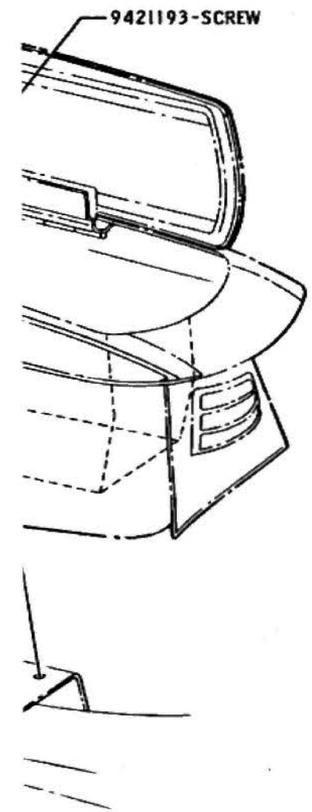

:—JETAWAY TRANSMISSION

Oldsmobile GRAPHIC ILLUSTRATION		PAGE 1-2.7
SERIES F85	REF. 35055	PART NO. 387269

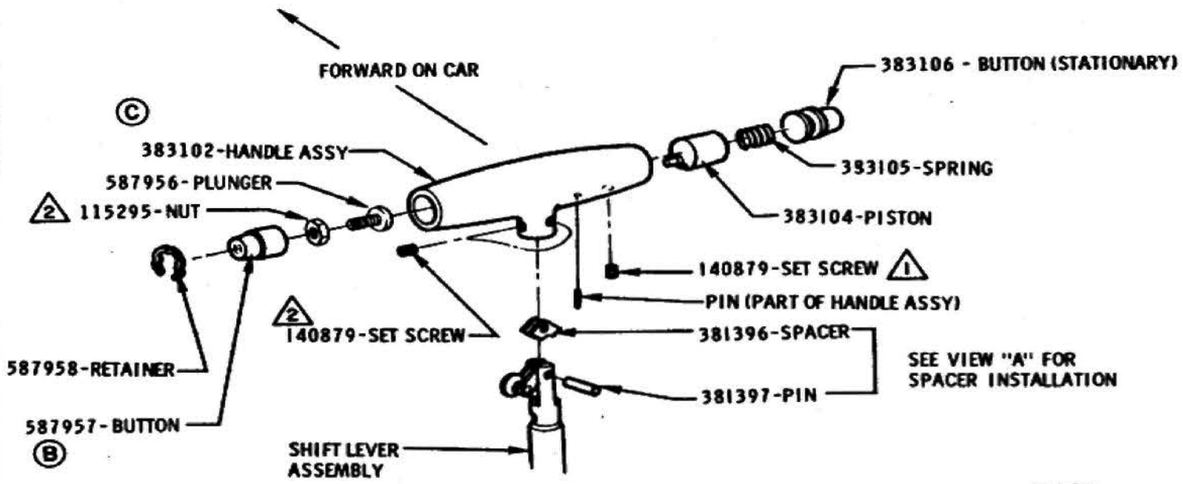

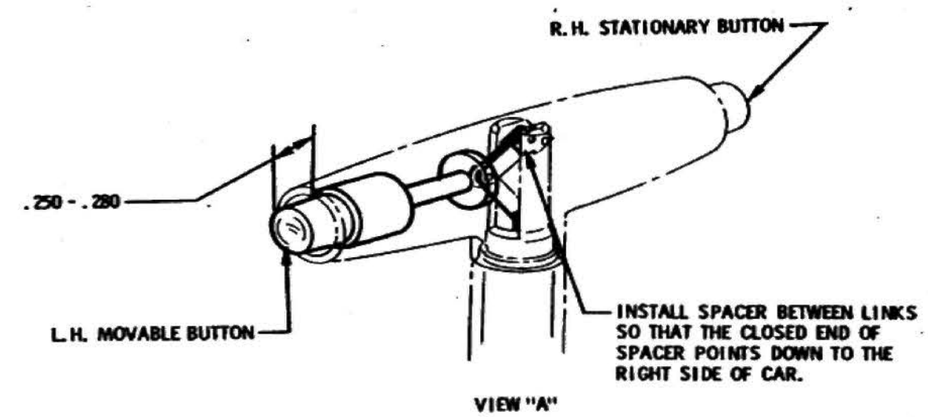

SPACER INSTALLATION

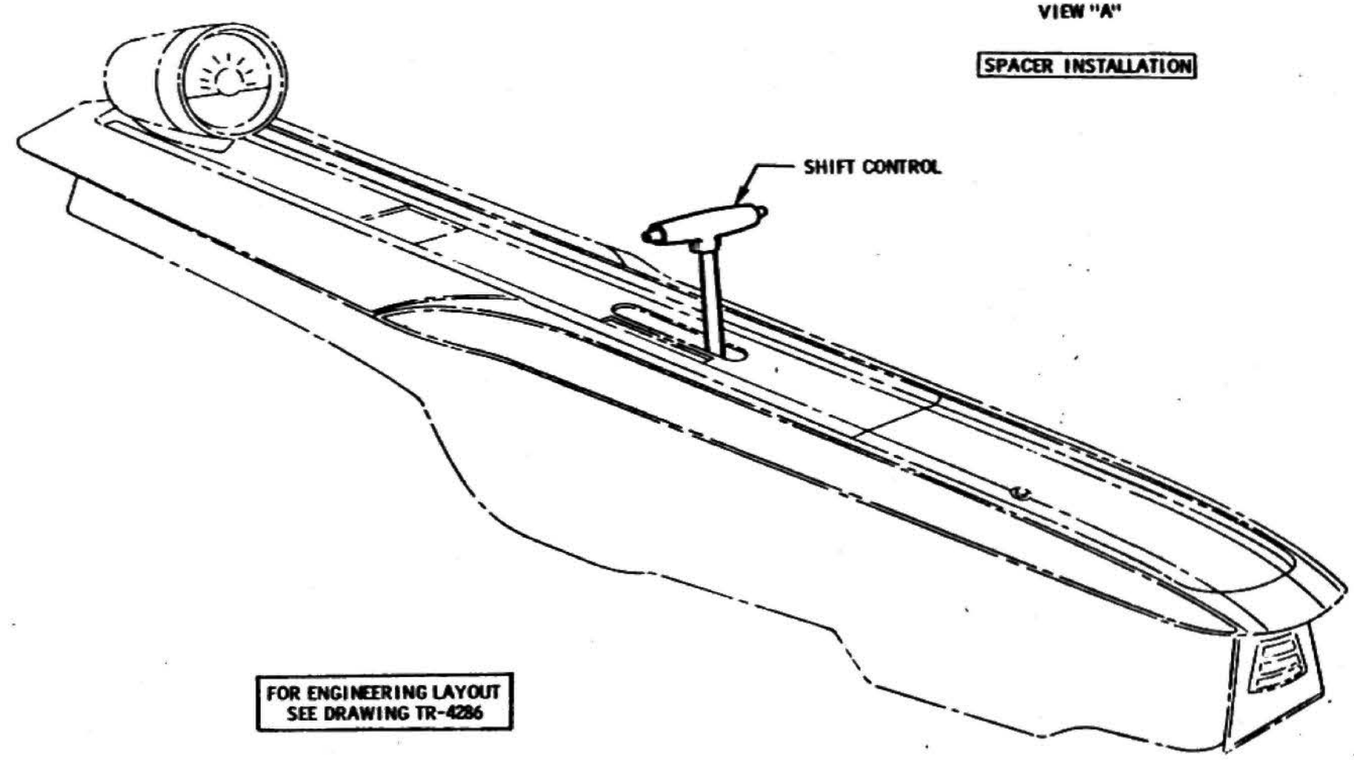

BUTTON INSTRUCTIONS

1. INSTALL ALL PARTS EXCEPT 587958 RETAINER.
2. MOVE THE LEVER ASSEMBLY TO THE "REVERSE" POSITION.
3. HOLD THE MOVABLE BUTTON IN AGAINST THE ROLLER OF THE TOGGLE MECHANISM AND CHECK THE .250 - .280 GAUGE DIMENSION FROM THE END OF THE BUTTON TO THE END OF THE HANDLE. READJUST THE LENGTH OF THE BUTTON ASSEMBLY IF NECESSARY TO OBTAIN THIS DIMENSION. (BE SURE THE LOCK NUT IS TIGHTENED PROPERLY).
4. INSTALL 587958 RETAINER.

Ⓓ

1 3.00-3.96 LBS. IN.
2 24-27 LBS. IN.

FOR ENGINEERING LAYOUT SEE DRAWING TR-4286

DATE	SYM	REVISION	DR.	CK.	DATE	SYM	REVISION	DR.	CK.	DATE	SYM	REVISION	DR.	CK.
										11-25-64	D	TORQUE SPECS ADDED	J.C.	Dwg
										9-30-64	C	WAS 383103 HANDLE	DP	VP
										4-1-64	B	WAS 587955 BUTTON ASSY	GK	VP
										4-1-64	A	WAS 383102 HANDLE ASSY	GK	VP

INSTALLATION	CONSOLE – JETAWAY TRANSMISSION		
DATE JAN. 4, 1964	FIRST USED 1965	Oldsmobile GRAPHIC ILLUSTRATION	PAGE 1-2.8
DR. BY C.E. MAY			
CHECKED H. VAN PELT	SERIES F85	REF. 95M93	PART NO. 387269
APPR.			
APPR.			

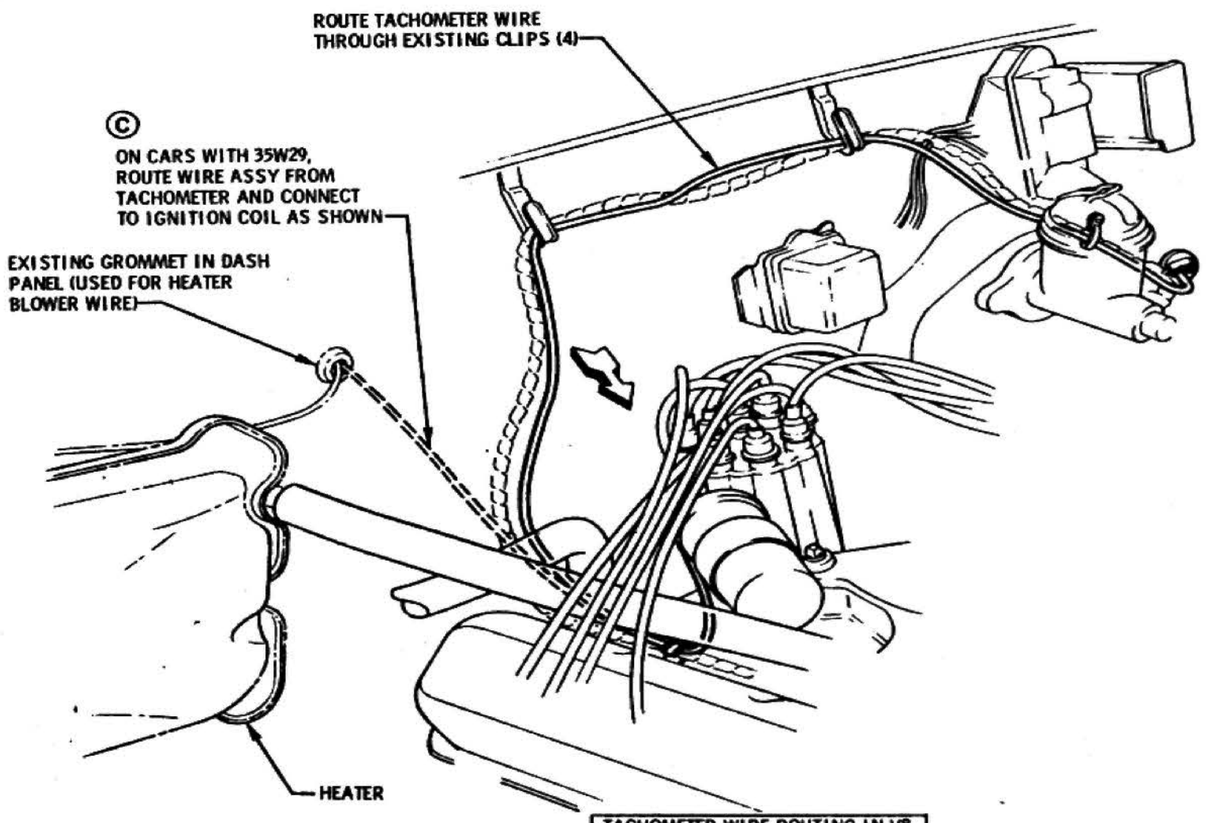

TACHOMETER WIRE ROUTING IN V8 ENGINE COMPARTMENT WITH HEATER

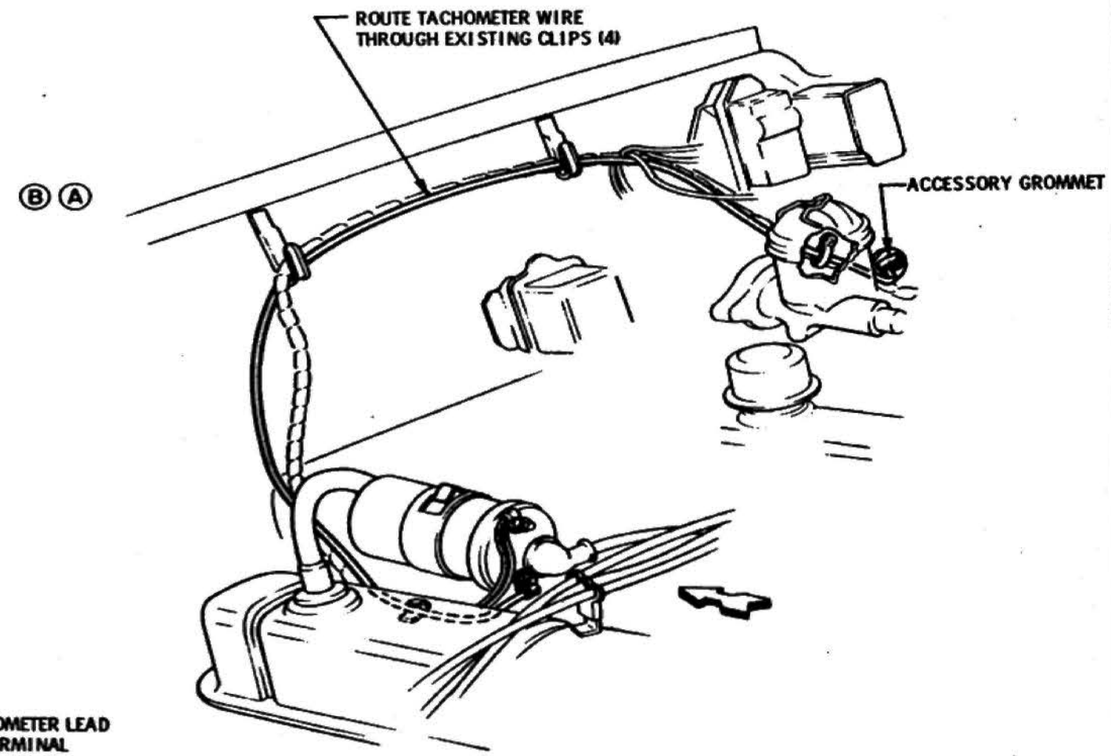

TACHOMETER WIRE ROUTING IN V6 ENGINE COMPARTMENT

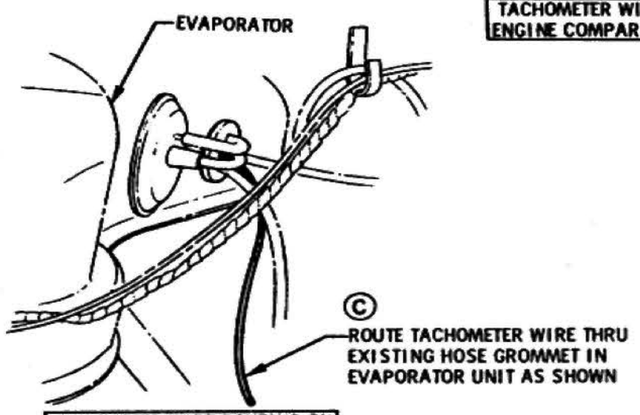

TACHOMETER WIRE ROUTING ON CARS WITH 35C60 & 35W29

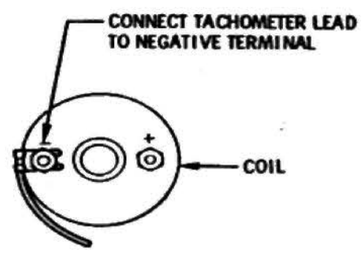

VIEW IN DIRECTION OF ARROW

TACHOMETER WIRE ROUTING IN V8 ENGINE COMPARTMENT

DATE	SYM	REVISION	DR.	CK.	DATE	SYM	REVISION	DR.	CK.	DATE	SYM	REVISION	DR.	CK.
										2-11-65	C2	35W29 INFOR. ADDED	JVE	VP
										3-28-64	B	NOTE REMOVED	CB	VP
										2-27-64	A	NOTE ADDED	CB	VP

INSTALLATION **CONSOLE-JETAWAY TRANSMISSION**

DATE JAN. 4, 1964
DR. BY C.E. MAY
CHECKED H. VAN PELT
APPR.
APPR.

FIRST USED 1965
SERIES F85
Oldsmobile GRAPHIC ILLUSTRATION
REF. 35M33
PAGE 1-2.9
PART NO. 387269

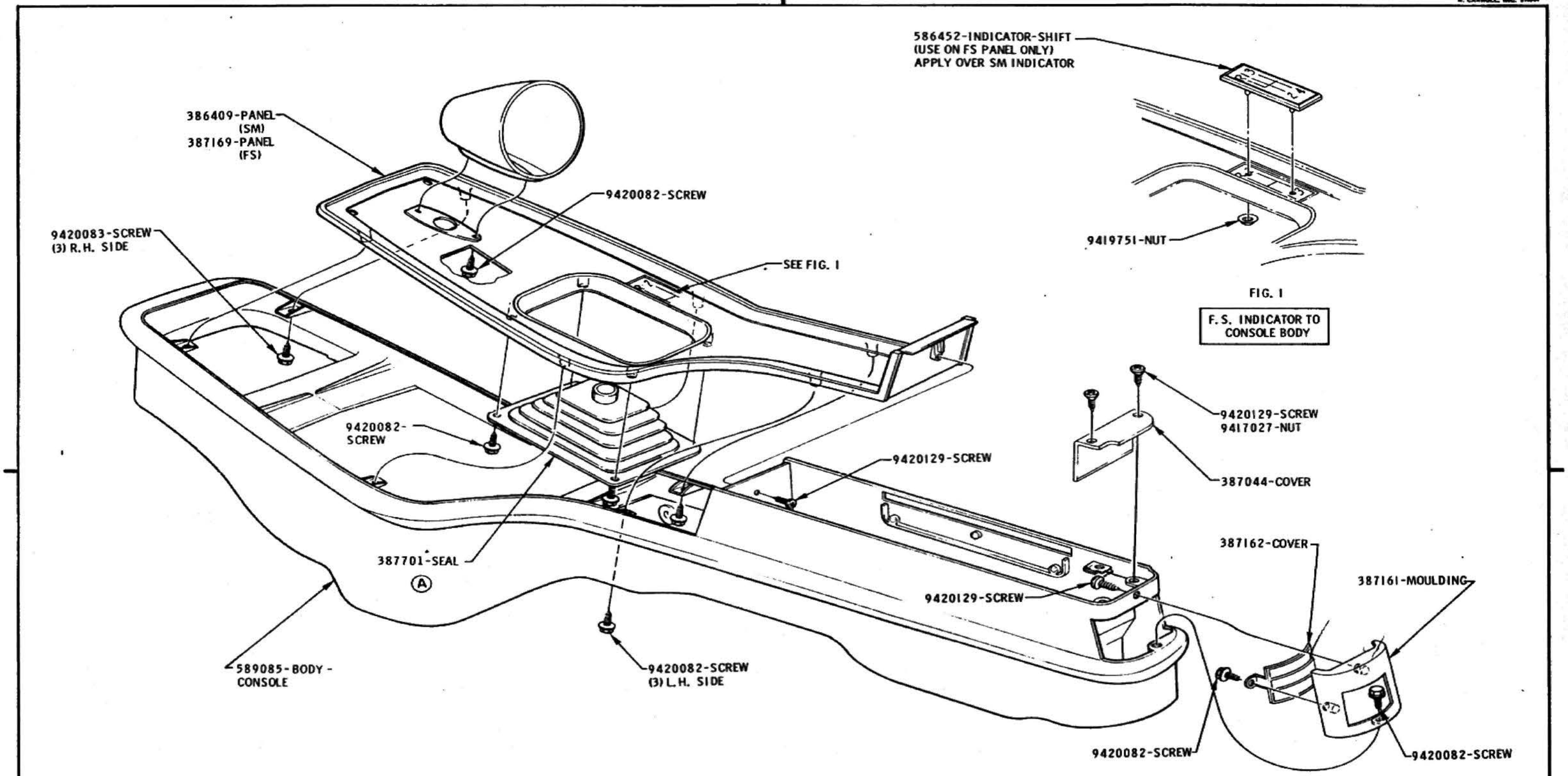

DATE	SYM	REVISION	DR.	CK.	DATE	SYM	REVISION	DR.	CK.	DATE	SYM	REVISION	DR.	CK.
										2-11-64	A	WAS 589088 SEAL	CB	VP

INSTALLATION — **CONSOLE – SYNCROMESH TRANSMISSION** 6 SHEETS

DATE JAN. 3, 1964
DR. BY G. KESTER
CHECKED H. VAN PELT
APPR.
APPR.

FIRST USED 1965 — Oldsmobile GRAPHIC ILLUSTRATION — PAGE 1-3.1

SERIES F-85 — REF. 35-D55 — PART NO. 387268

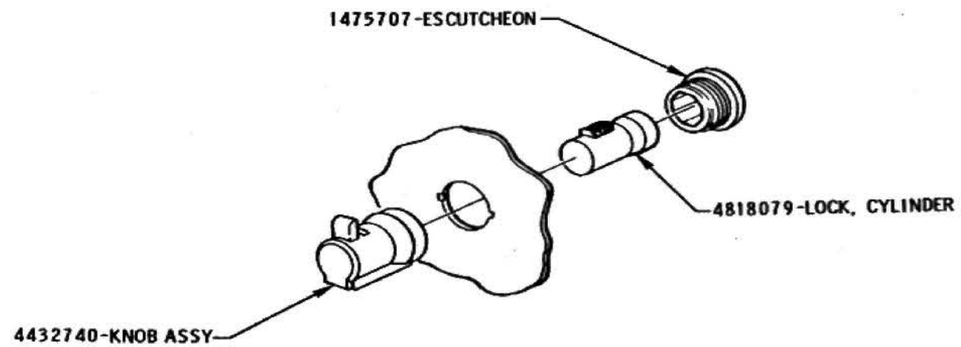

FIG. 3

LOCK AND KNOB ASSY TO DOOR

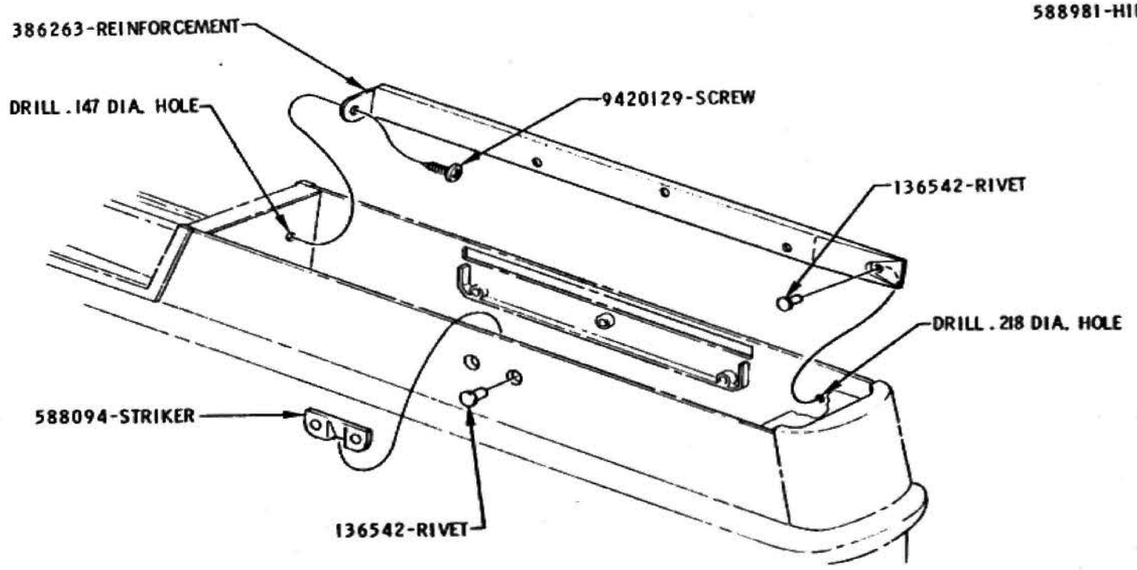

VIEW "A"

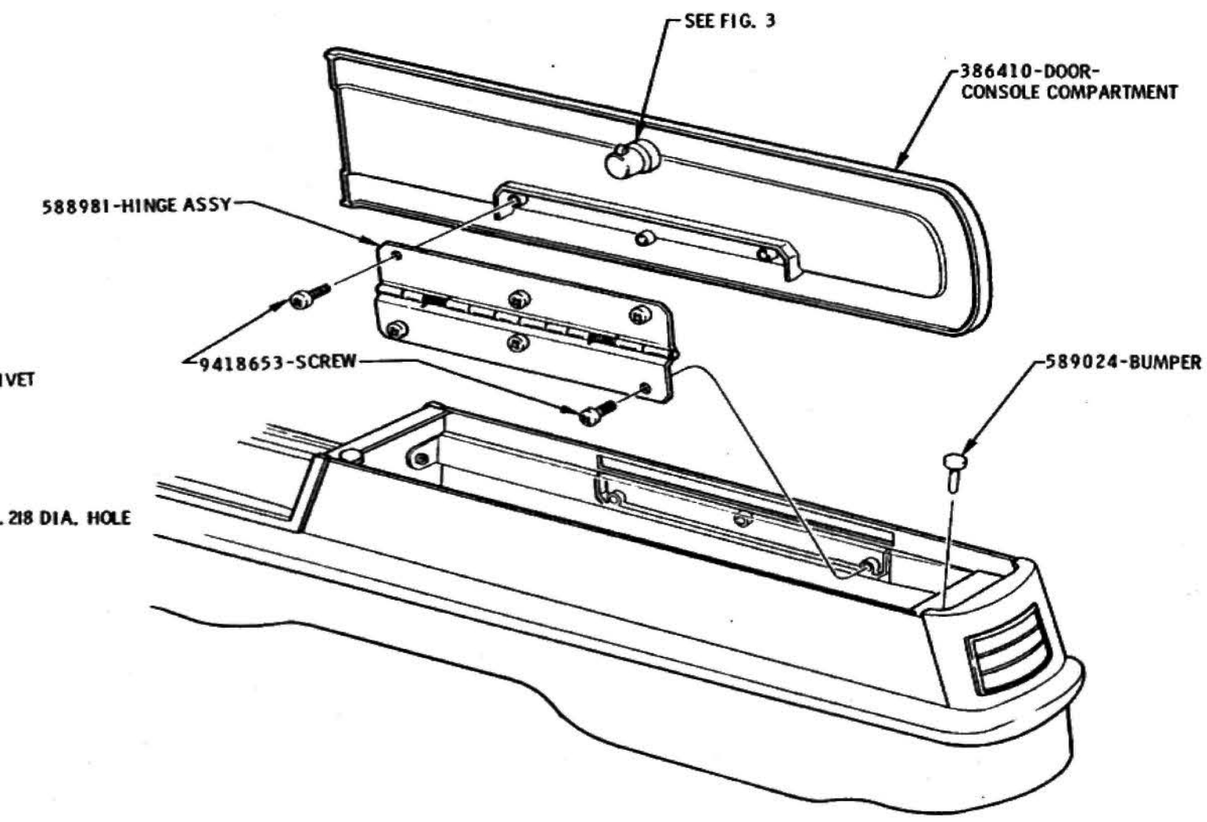

FIG. 4

DOOR ASSY TO CONSOLE

DATE	SYM	REVISION	DR.	CK.	DATE	SYM	REVISION	DR.	CK.	DATE	SYM	REVISION	DR.	CK.

INSTALLATION	CONSOLE — SYNCROMESH TRANSMISSION		
DATE JAN. 3, 1964	FIRST USED 1965	Oldsmobile GRAPHIC ILLUSTRATION	PAGE 1-3.2
DR. BY G. KESTER			
CHECKED H. VAN PELT	SERIES F-85	REF. 35-D55	PART NO. 387268
APPR.			
APPR.			

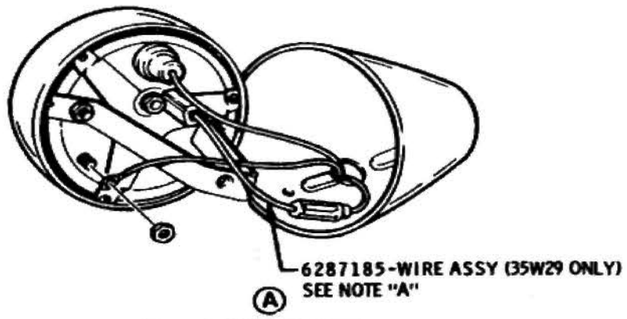

TACHOMETER WIRING HOOK-UP

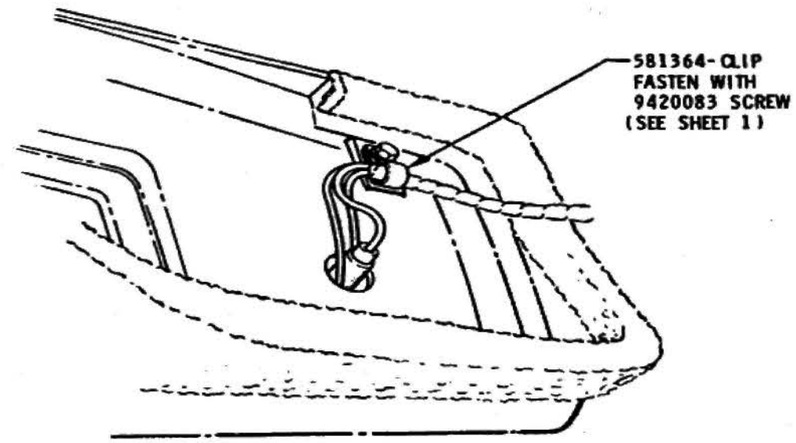

BOTTOM VIEW OF CONSOLE

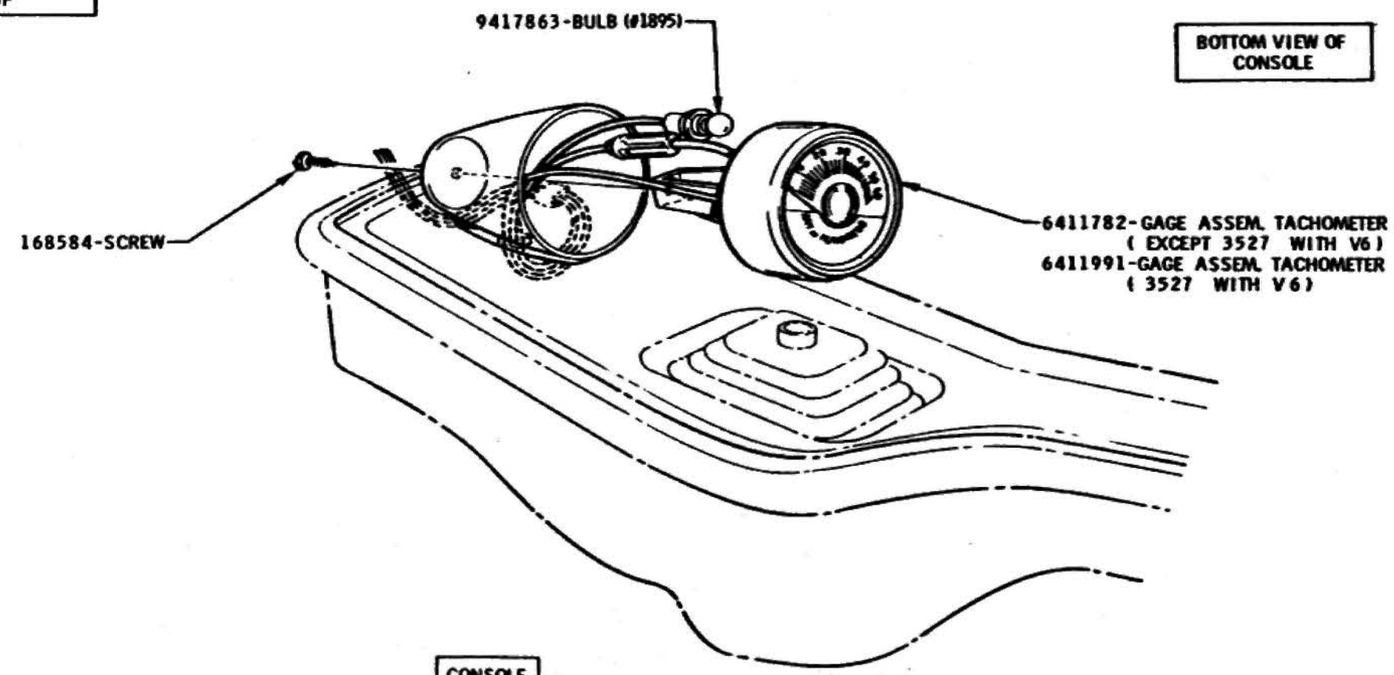

CONSOLE WIRING

NOTE "A"
ON CARS WITH 35W29, BE SURE BROWN LEADS ON EACH END OF 2987965-CONSOLE HARNESS (IGNITION COIL TO TACHOMETER) ARE CUT OFF. REPLACE WITH 6287185-WIRE ASSY.

DATE	SYM	REVISION	DR.	CK.	DATE	SYM	REVISION	DR.	CK.	DATE	SYM	REVISION	DR.	CK.
										2-11-65	A	NOTE ADDED		VP

INSTALLATION: CONSOLE–SYNCROMESH TRANSMISSION

DATE JAN. 3, 1964
DR. BY G. KESTER
CHECKED H. VAN PELT
APPR.
APPR.

FIRST USED: 1965
Oldsmobile GRAPHIC ILLUSTRATION
PAGE: 1-3.3
SERIES: F-85
REF.: 35-D55
PART NO.: 387268

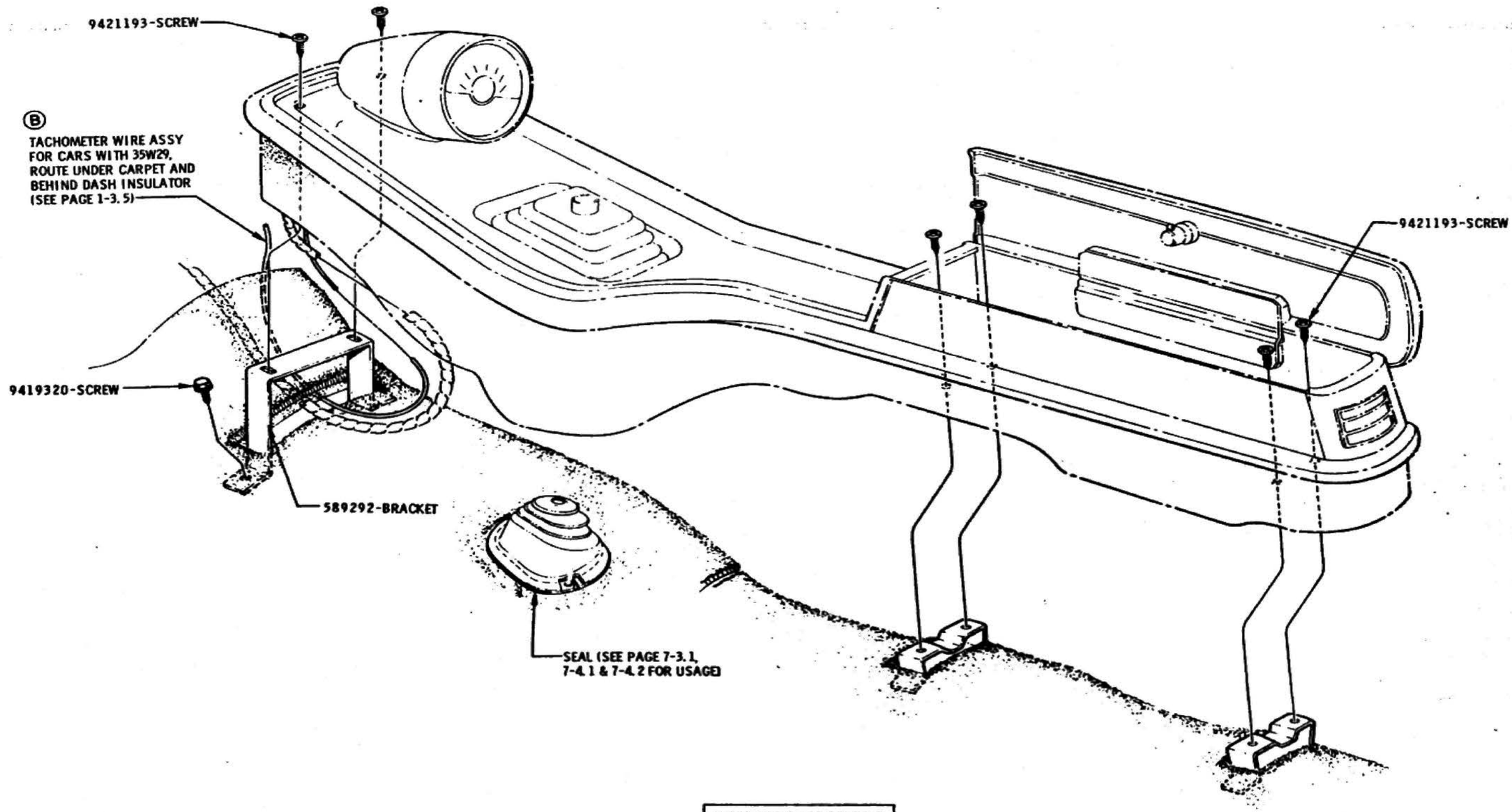

INSTALLATION OF CONSOLE TO MOUNTING BRACKETS

DATE	SYM	REVISION	DR.	CK.	DATE	SYM	REVISION	DR.	CK.	DATE	SYM	REVISION	DR.	CK.
										2-12-65	B	35W29 INFOR. ADDED		VP
										8-27-64	A	VIEW "A" REMOVED		VP

INSTALLATION	CONSOLE — SYNCROMESH TRANSMISSION		
DATE JAN. 3, 1964	FIRST USED 1965	Oldsmobile GRAPHIC ILLUSTRATION	PAGE 1-3.4
DR. BY G. KESTER			
CHECKED K. VAN PELT	SERIES F-85	REV. 55-D&S 55-M12420	PART NO. 387268
APPR.			
APPR.			

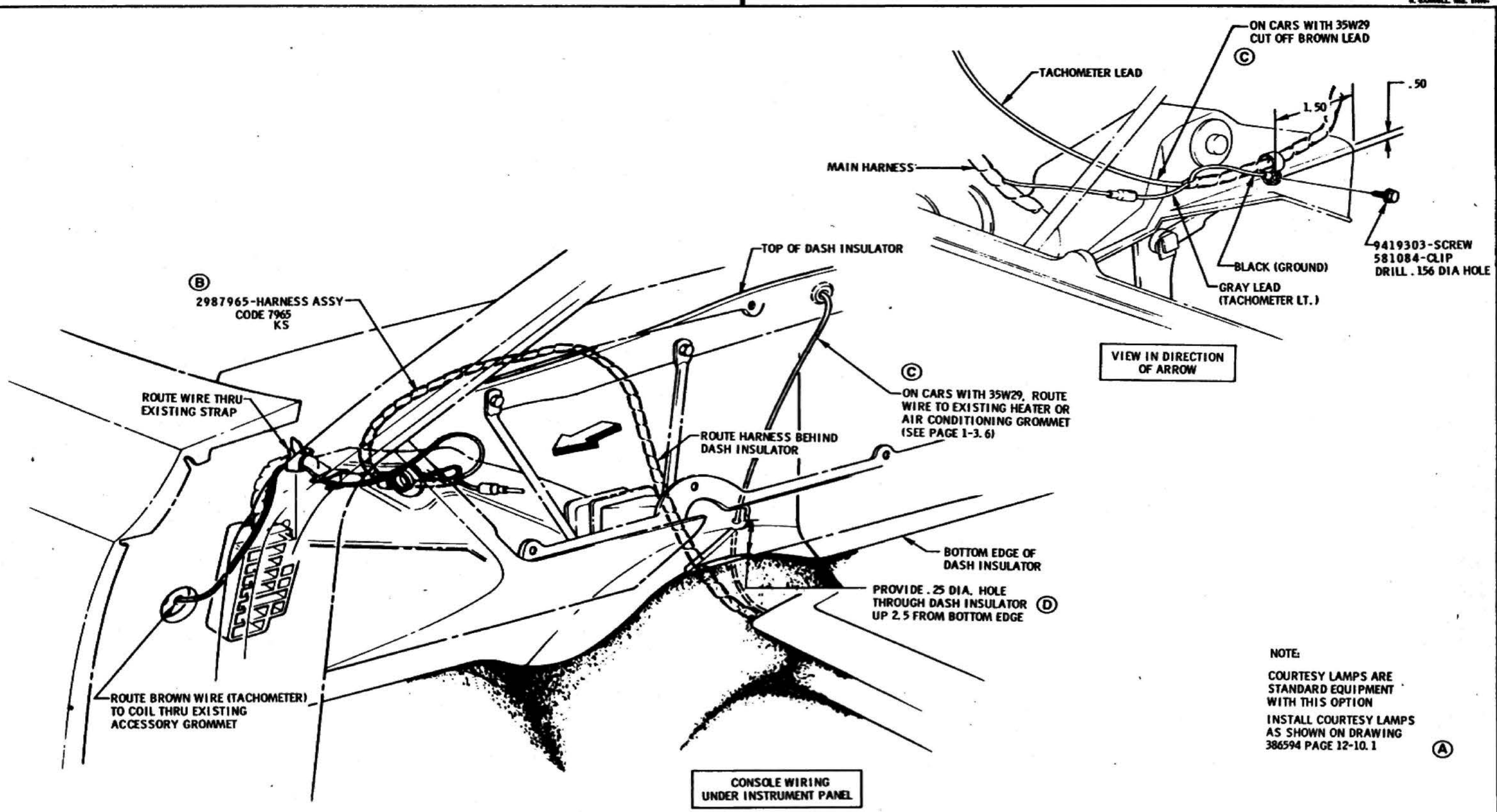

NOTE:

COURTESY LAMPS ARE STANDARD EQUIPMENT WITH THIS OPTION

INSTALL COURTESY LAMPS AS SHOWN ON DRAWING 386594 PAGE 12-10.1 Ⓐ

DATE	SYM	REVISION	DR.	CK.	DATE	SYM	REVISION	DR.	CK.	DATE	SYM	REVISION	DR.	CK.
										4-20-65	D	NOTE ADDED	GV	VP
										2-11-65	C2	35W29 INFOR. ADDED	GV	VP
										7-17-64	B	CODE ADDED	GV	BP
										2-11-64	A	NOTE REVISED	GB	VP

INSTALLATION **CONSOLE—SYNCROMESH TRANSMISSION**

DATE JAN. 8, 1964
DR. BY G. KESTER
CHECKED H. VAN PELT
APPR.
APPR.

FIRST USED 1965 — Oldsmobile GRAPHIC ILLUSTRATION — PAGE 1-3.5

SERIES F-85 — REF. 35-D55 — PART NO. 387268

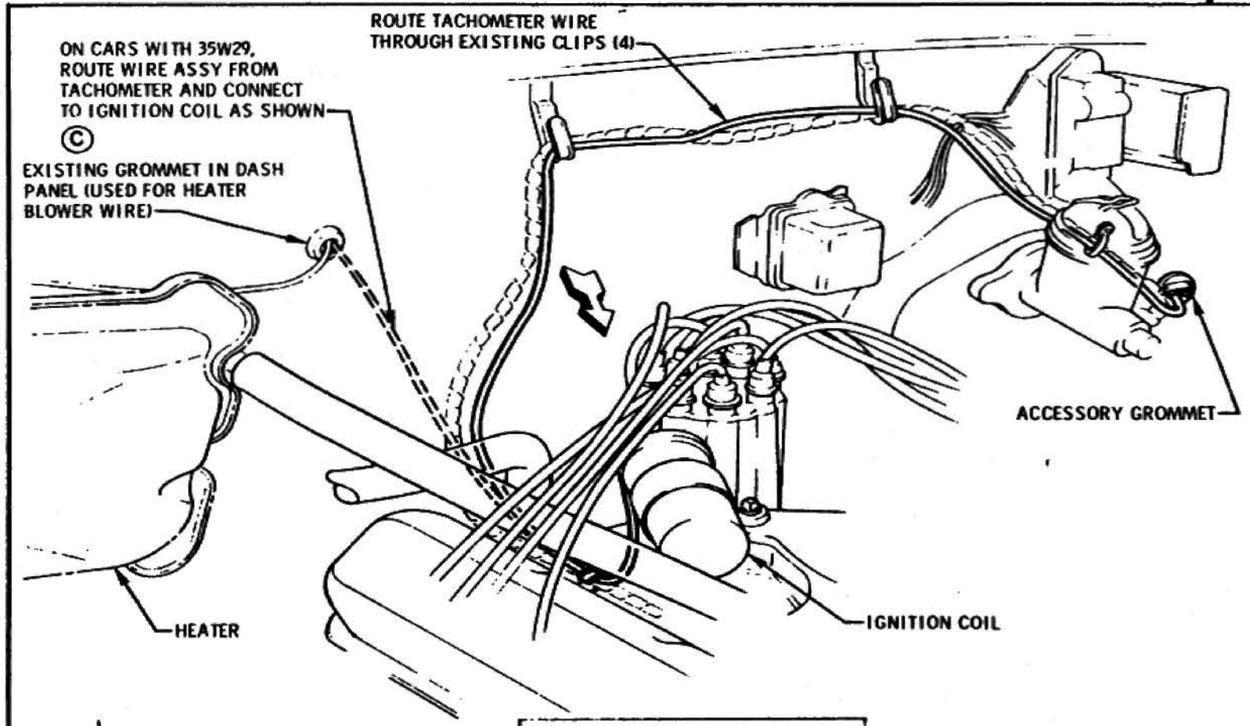

TACHOMETER WIRE ROUTING IN V8 ENGINE COMPARTMENT WITH HEATER

Ⓐ Ⓑ

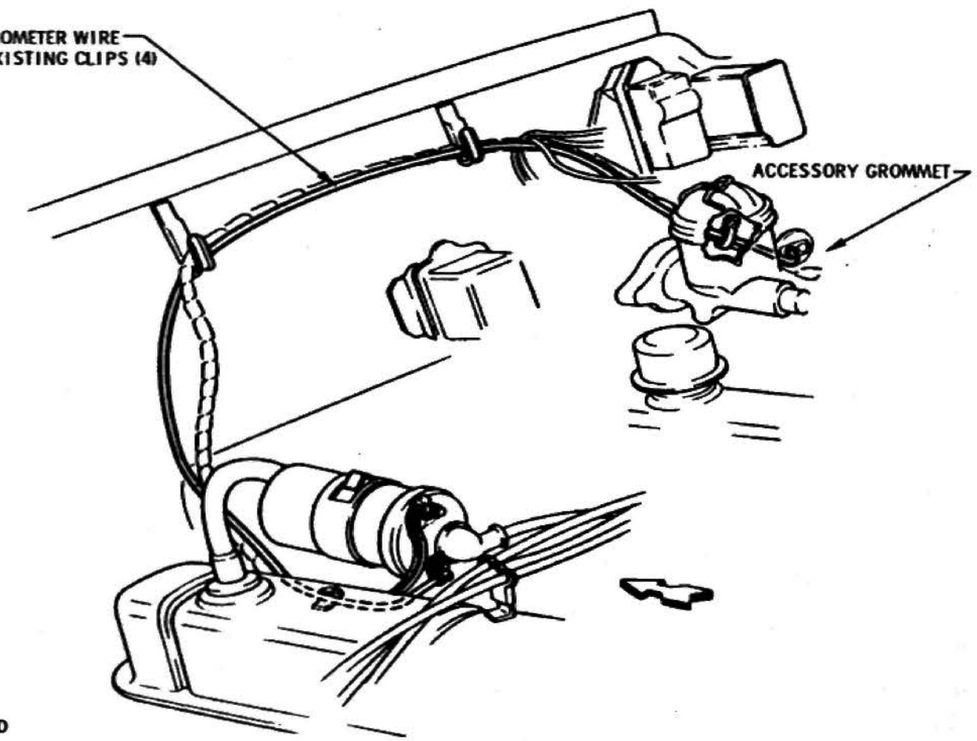

TACHOMETER WIRE ROUTING IN V6 ENGINE COMPARTMENT

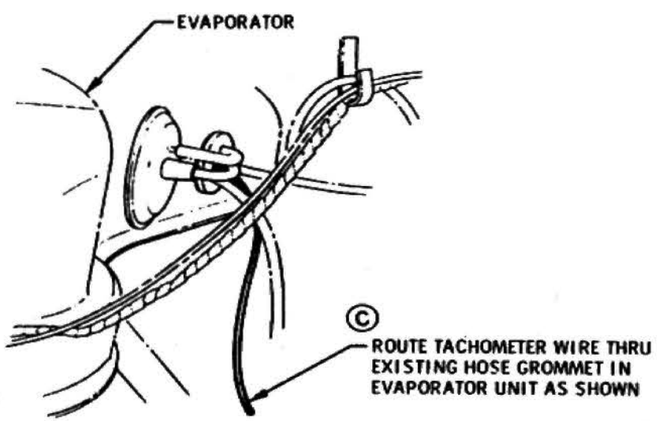

TACHOMETER WIRE ROUTING ON CARS WITH 35C60 & 35W29

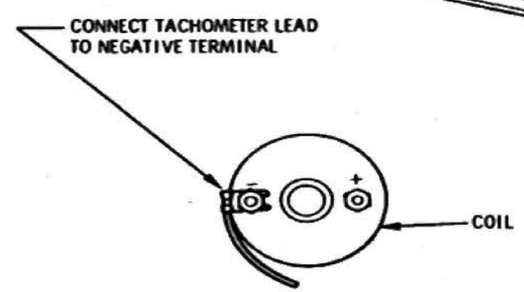

VIEW IN DIRECTION OF ARROW

TACHOMETER WIRE ROUTING IN V8 ENGINE COMPARTMENT

DATE	SYM	REVISION	DR.	CK.	DATE	SYM	REVISION	DR.	CK.	DATE	SYM	REVISION	DR.	CK.
										2.11.65	C2	35W29 INFO. ADDED		VP
										3.28.64	B	NOTE REMOVED		VP
										2.27.64	A	NOTE ADDED		VP

INSTALLATION	CONSOLE – SYNCROMESH TRANSMISSION		
DATE JAN. 3, 1964	FIRST USED 1965	Oldsmobile GRAPHIC ILLUSTRATION	PAGE 1-3.6
DR. BY G. KESTER			
CHECKED H. VAN PELT	SERIES F-85	REF. 35-D55	PART NO. 387268
APPR.			
APPR.			

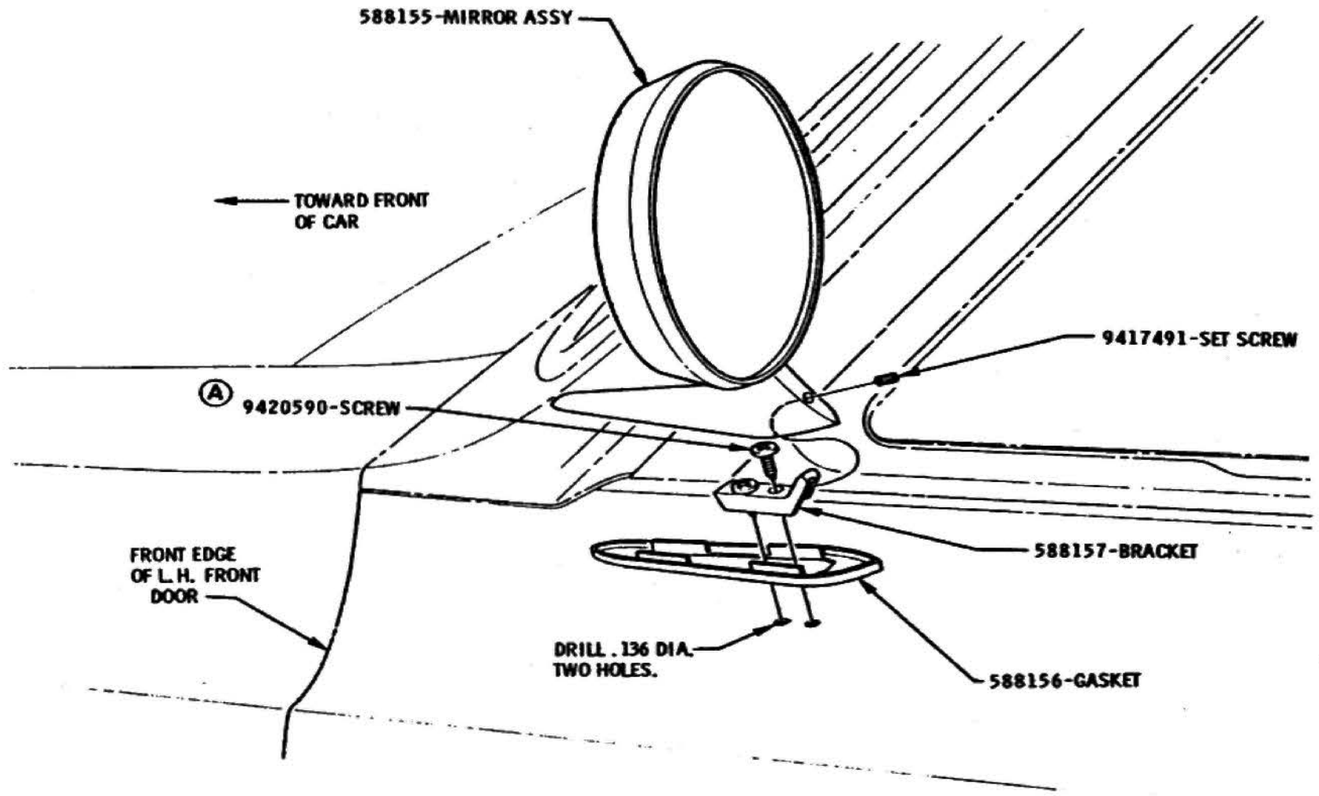

MIRROR INSTALLATION

DATE	SYM	REVISION	DR.	CK.	DATE	SYM	REVISION	DR.	CK.	DATE	SYM	REVISION	DR.	CK.
										9-9-64	A	WAS 9420721-SCREW	B/A	WD

INSTALLATION	OUTSIDE REAR VIEW MIRROR		
DATE MAY 22, 1964	FIRST USED 1965	Oldsmobile GRAPHIC ILLUSTRATION	PAGE 1-4.1
DR. BY ED. ROE			
CHECKED H. VAN PELT	SERIES F-85	REF. 35032	PART NO. 389255
APPR.			
APPR.			

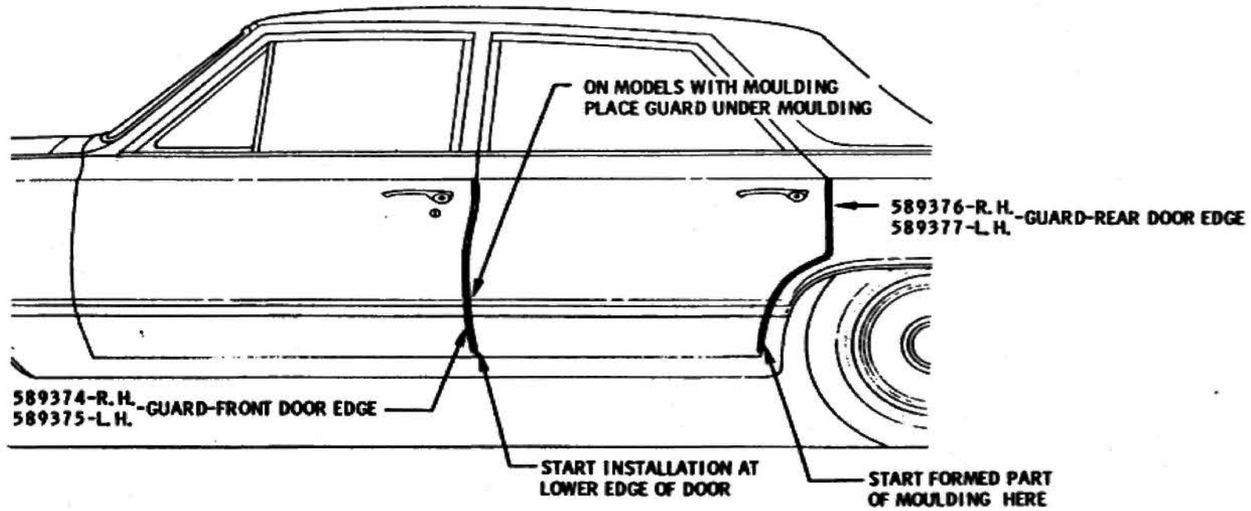

FOR ALL
FOUR DOOR MODELS

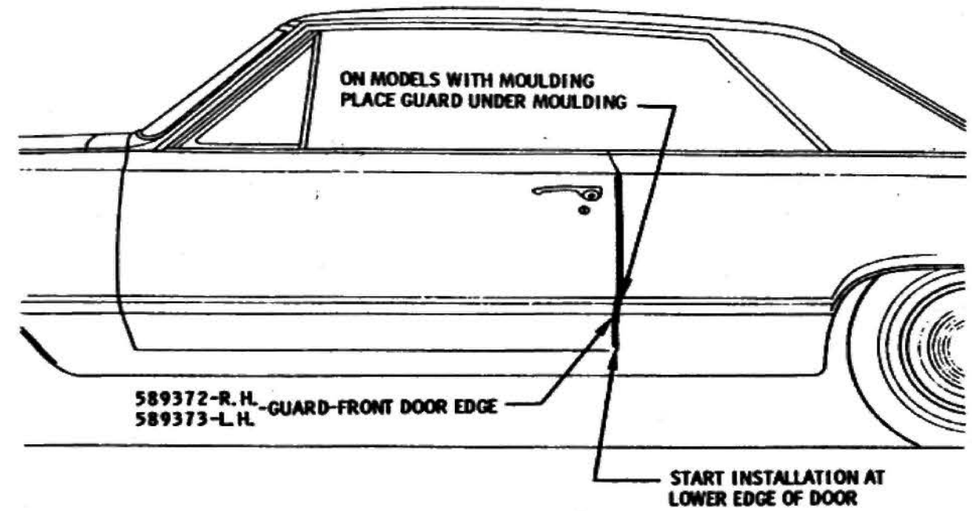

FOR ALL
TWO DOOR MODELS

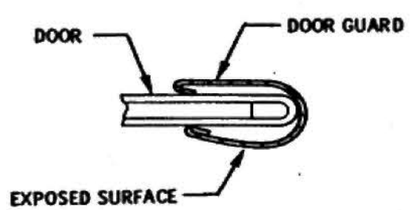

TYPICAL SECTION THRU
REAR EDGE OF DOOR AND
DOOR GUARD.

Ⓐ GENERAL INSTRUCTIONS

PLACE GUARD IN POSITION ON REAR EDGE OF DOOR AS SHOWN AND TAP OVER EDGE USING RUBBER MALLET OR BLOCK OF WOOD, UNTIL GUARD IS FIRMLY SEATED ON DOOR EDGE. LOCAL CRIMP PERMISSIBLE TO SECURE TIGHT FIT.

DATE	SYM	REVISION	DR.	CK.	DATE	SYM	REVISION	DR.	CK.	DATE	SYM	REVISION	DR.	CK.
										2-9-65	A	NOTE REVISED	RGS	JP

INSTALLATION	DOOR EDGE GUARDS		
DATE JAN. 9, 1964	FIRST USED 1965	Oldsmobile GRAPHIC ILLUSTRATION	PAGE 1-5.1
DR. BY JOSEPH V. GALL			
CHECKED H. VAN PELT	SERIES F 85	REF. 35B93	PART NO. 387363
APPR.			
APPR.			

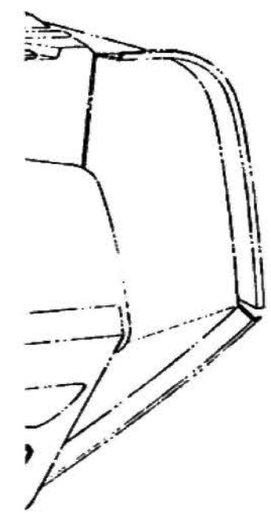

- SCREW

-GRILLE

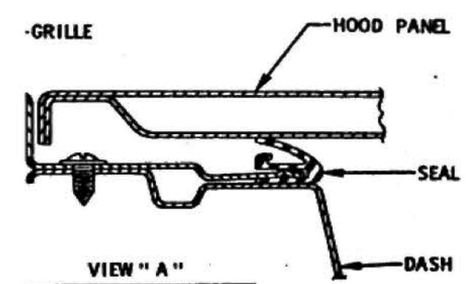

VIEW " A "

TYPICAL SECTION THRU DASH & COWL GRILLE

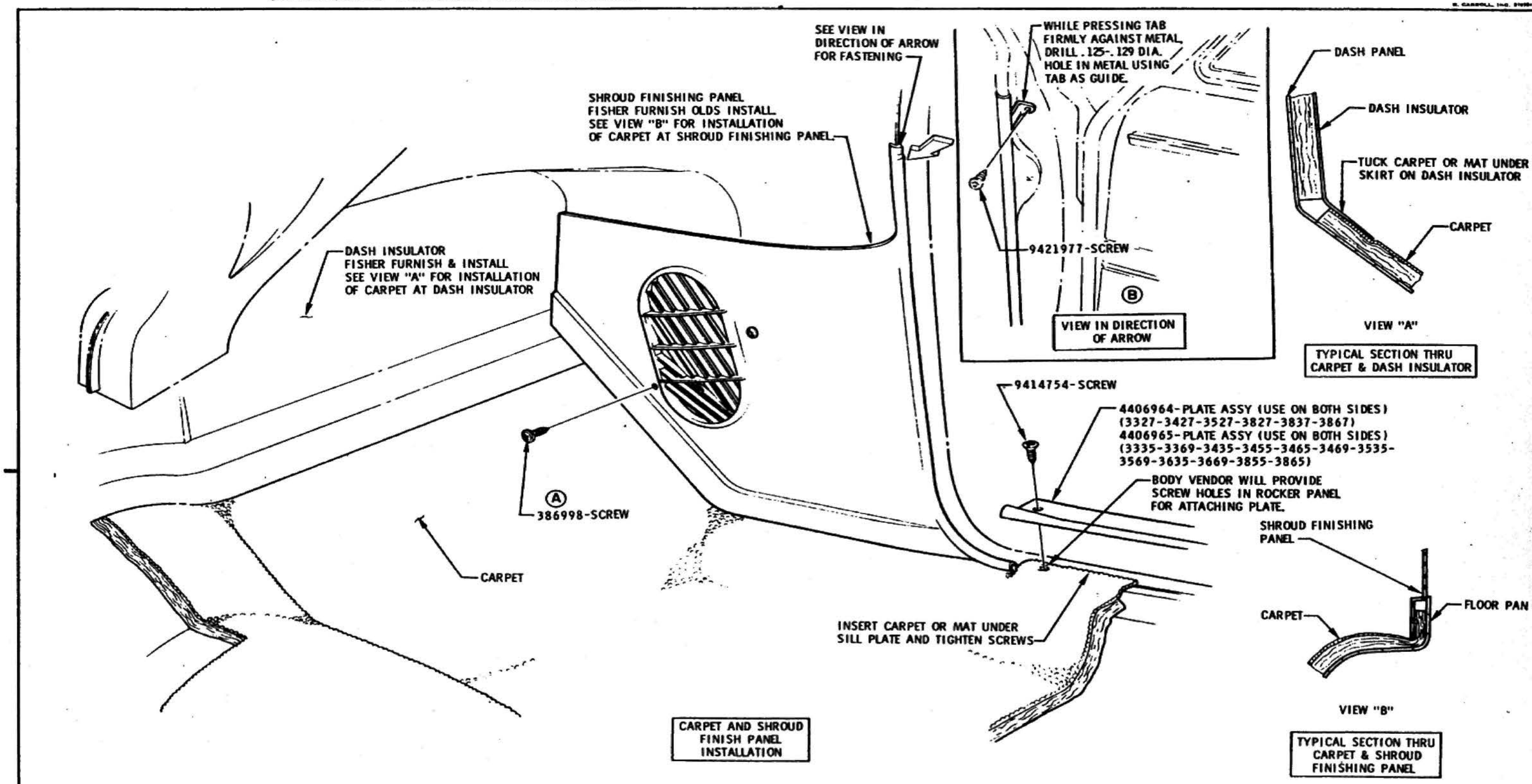

CARPET AND SHROUD FINISH PANEL INSTALLATION

DATE	SYM	REVISION	DR.	CK.	DATE	SYM	REVISION	DR.	CK.	DATE	SYM	REVISION	DR.	CK.
										8-20-64	B	VIEW ADDED	BP	VD
										1-4-64	A	WAS 4720885	OM	D.T.

INSTALLATION	BODY PARTS		
DATE OCT. 22, 1963	FIRST USED 1965	Oldsmobile GRAPHIC ILLUSTRATION	PAGE 1-6.2
DR. BY C.E. MAY			
CHECKED H. VAN PELT	SERIES 33-34-35-36-3800	REF. 35C48	PART NO. 386185
APPR.			
APPR.			

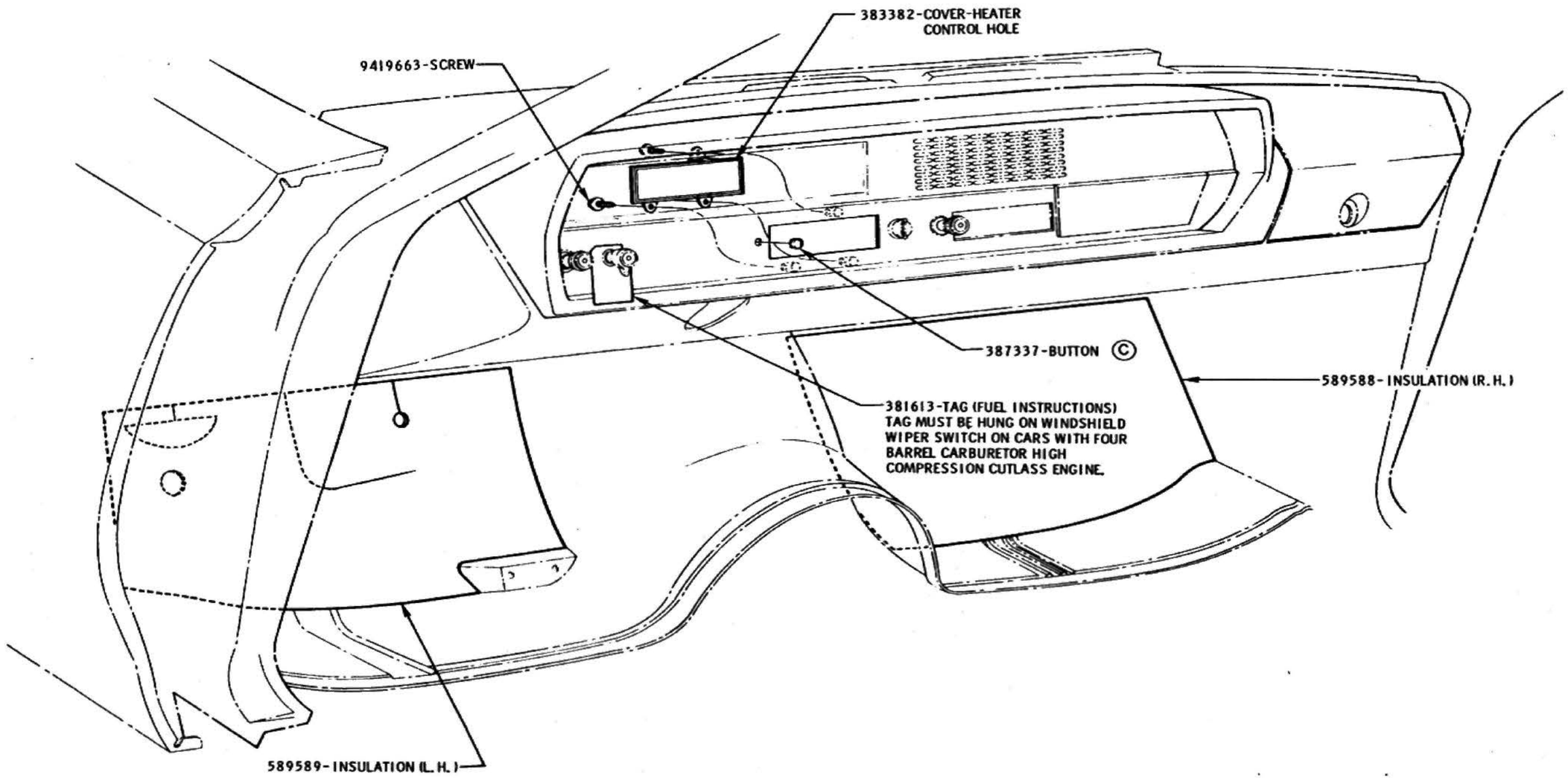

HEATER HOLE COVER & TOE PAN INSULATION INSTALLATION

DATE	SYM	REVISION	DR.	CK.	DATE	SYM	REVISION	DR.	CK.	DATE	SYM	REVISION	DR.	CK.
										1-14-64	C	WAS 384322-BUTTON	BP	VP
										1-4-64	B	REDRAWN & REVISED	CM	VP
										11-14-63	A	PART No's. ADDED	CB	VP

INSTALLATION — BODY PARTS

DATE OCT. 22, 1963
DR. BY C. E. MAY
CHECKED H. VAN PELT
APPR.
APPR.

FIRST USED 1965
SERIES F85
Oldsmobile GRAPHIC ILLUSTRATION
REF. 8A 35C48
PAGE 1-6.3
PART NO. 386185

Ⓐ₂

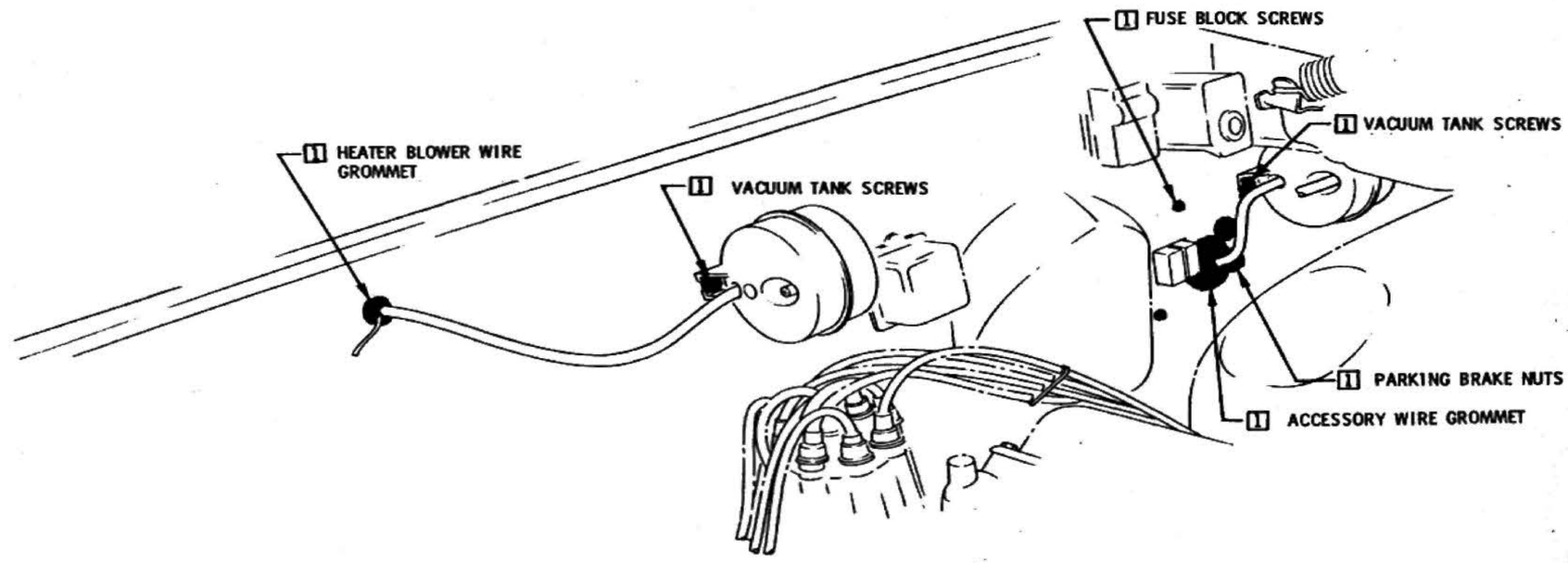

Ⓐ₁

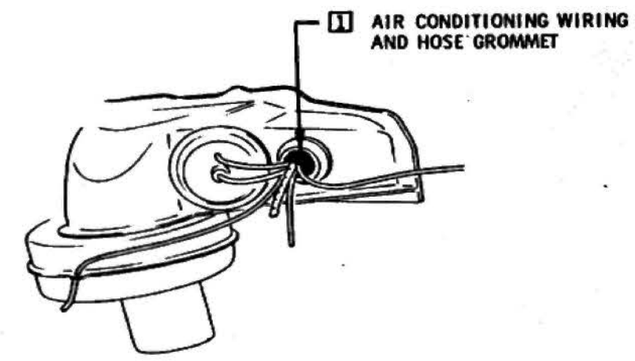

APPLY 9981041-SEALER TO AREAS INDICATED- [1]

DASH PANEL SEALING

DATE	SYM	REVISION	DR.	CK.	DATE	SYM	REVISION	DR.	CK.	DATE	SYM	REVISION	DR.	CK.
										4-13-64	A₂	VIEWS REMOVED	WM	VP

INSTALLATION — BODY PARTS

DATE JAN. 11, 1964
DR. BY C. E. MAY
CHECKED H. VAN PELT
APPR.
APPR.

FIRST USED 1965 — Oldsmobile GRAPHIC ILLUSTRATION — PAGE 1-6.4

SERIES F-85 — REF. 35C40 — PART NO. 386185

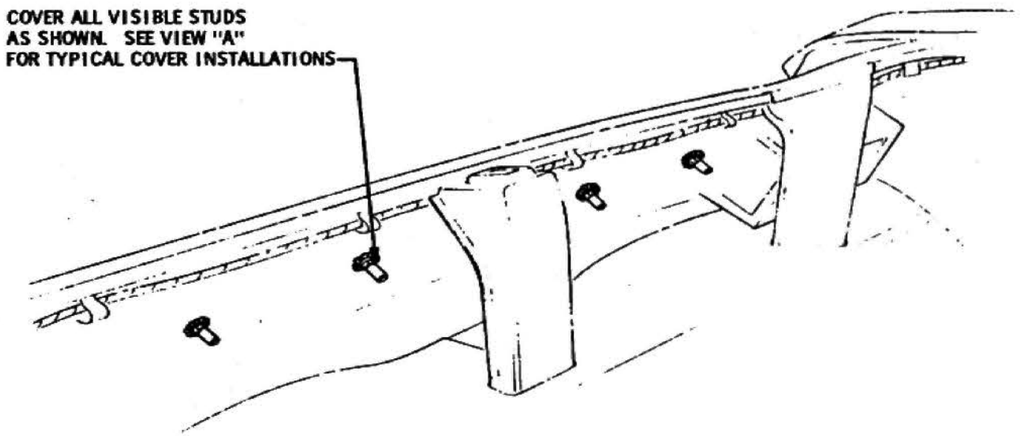

INSTALLATION OF REAR PANEL MOULDING STUD COVER

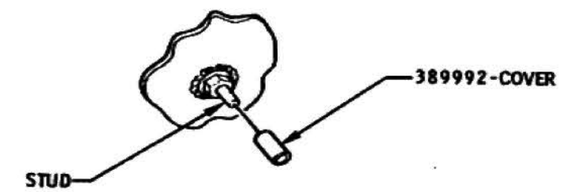

VIEW "A"
TYPICAL COVER INSTALLATION

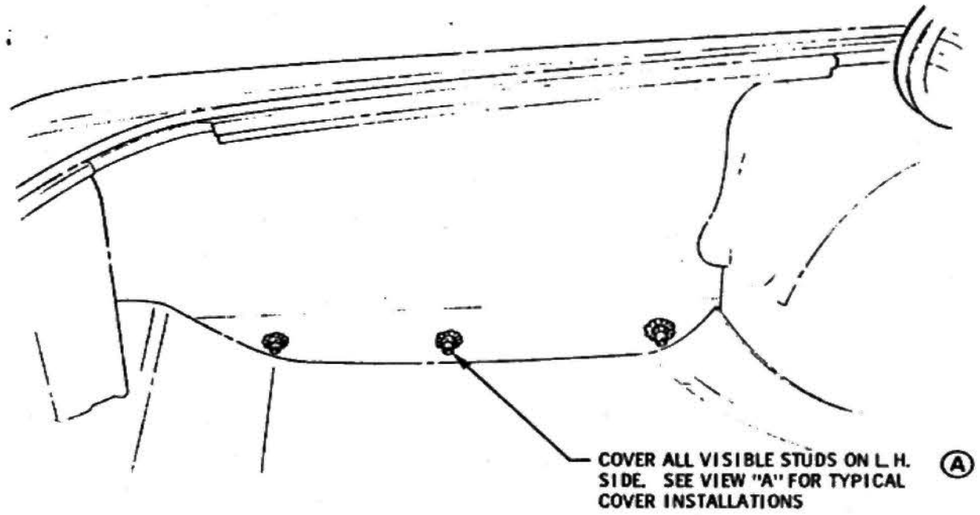

INSTALLATION OF L.H. SIDE MOULDING STUD COVER

DATE	SYM	REVISION	DR.	CK.	DATE	SYM	REVISION	DR.	CK.	DATE	SYM	REVISION	DR.	CK.
										8-3-64	A	L.H. ADDED TO NOTE	EW	WD

INSTALLATION	BODY PARTS		
DATE AUG. 1, 1964	FIRST USED 1965	Oldsmobile GRAPHIC ILLUSTRATION	PAGE 1-6.5
DR. BY JOSEPH H GALL			
CHECKED B. PARKER	SERIES F-85	REF. 1A2F 35Y6B	PART NO. 386185
APPR. TWF			
APPR.			

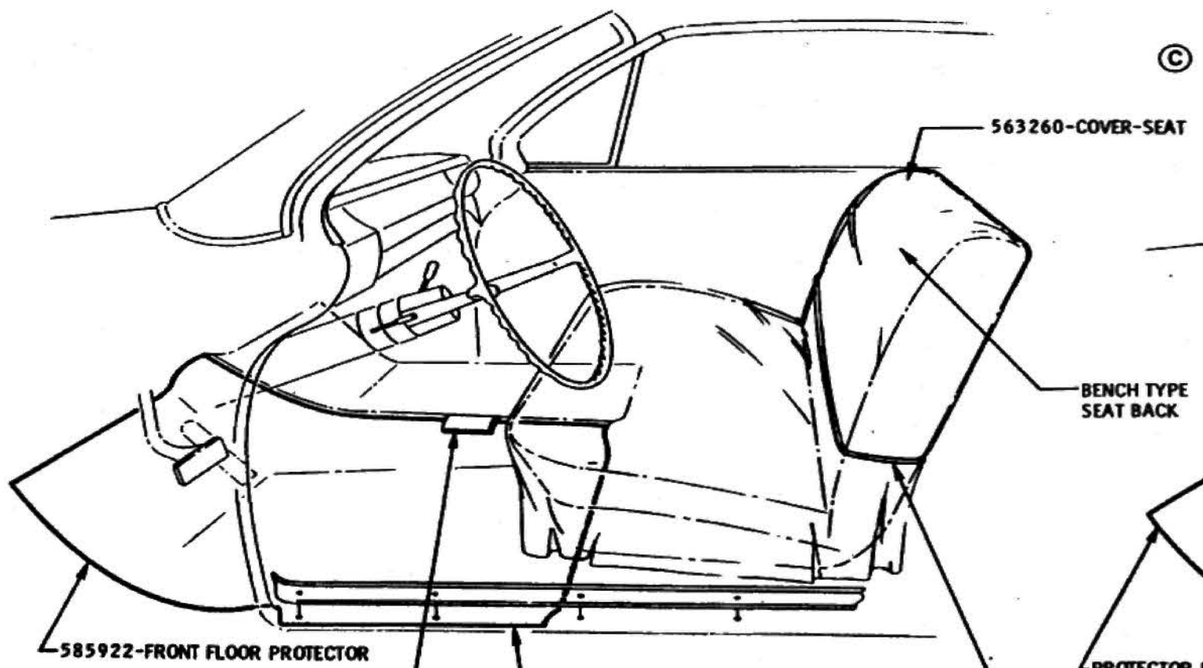

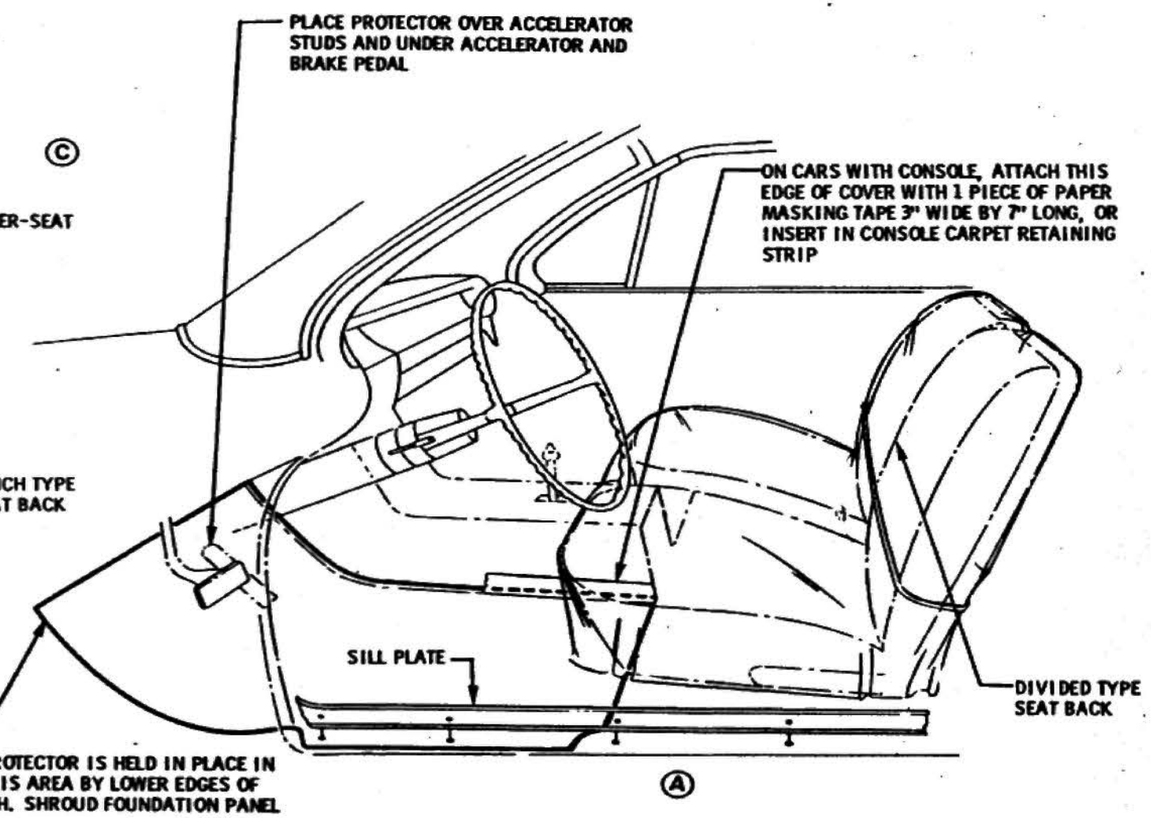

Ⓑ
4461443-ELASTIC BAND ASSY
(9985054-TWINE-OPT.)

INSTALLATION OF FRONT FLOOR AND SEAT PROTECTORS

DATE	SYM	REVISION	DR.	CK.	DATE	SYM	REVISION	DR.	CK.	DATE	SYM	REVISION	DR.	CK.
										4-7-65	C	589397 COVER REMOVED	RS	VP
										2-17-65	B	PART NOS ADDED	RS	VP
										1-22-65	A	SIDE EXTENSIONS REMOVED	RP	VP

INSTALLATION — **FRONT CARPET COVER**

DATE JAN. 17, 1964
DR. BY B. PARKER
CHECKED H. VAN PELT
APPR.
APPR.

FIRST USED 1965 — Oldsmobile GRAPHIC ILLUSTRATION — PAGE 1-7.1

SERIES F85 & BIG CAR — REF. 14-G — PART NO. 387459

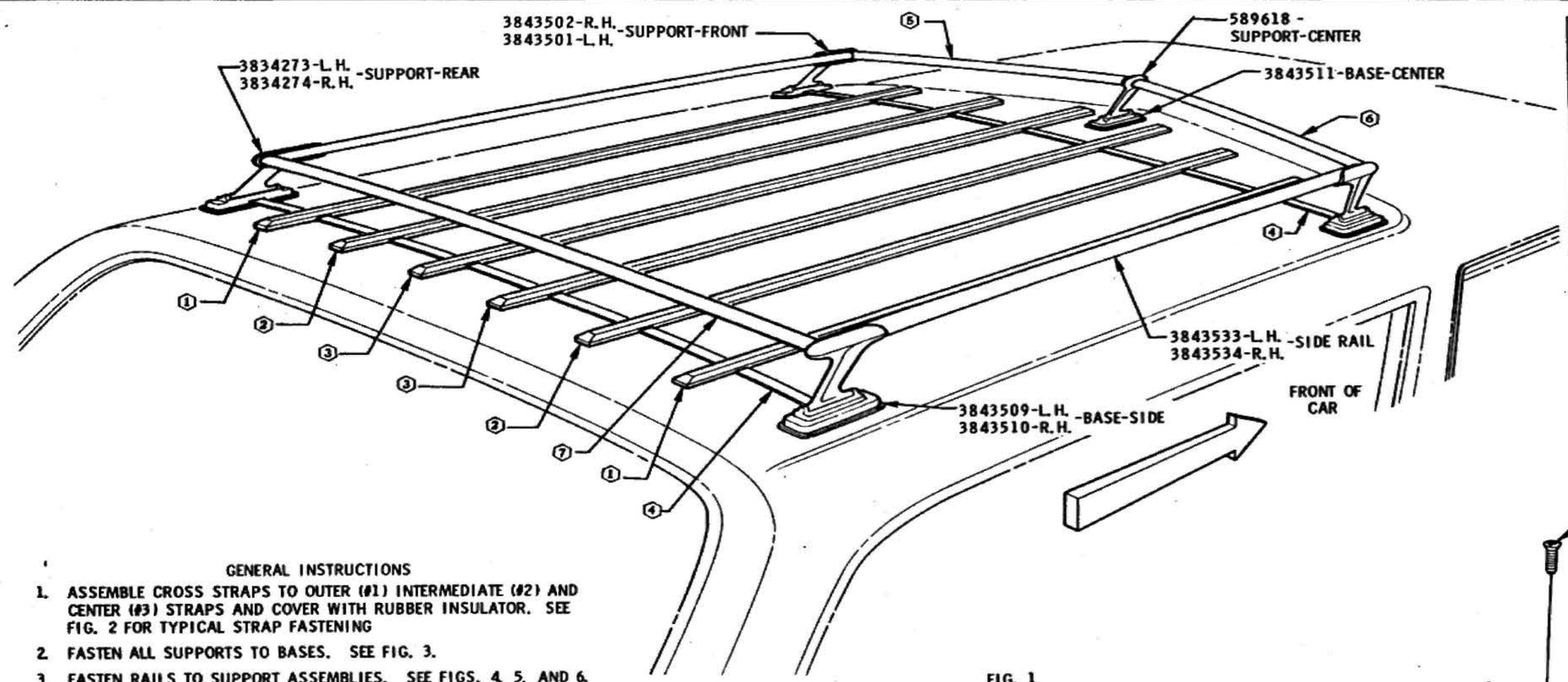

FIG. 1

LUGGAGE CARRIER INSTALLATION

PART NUMBER IDENTIFICATION CHART		
SYM	STRAP	INSULATOR
1	3843513	3843516
2	3843514	3843517
3	3843515	3843518
CROSS STRAP ASSEMBLY		
4	3843519	
FRONT RAIL		
5	3843507- L.H.	
6	3843508- R.H.	
REAR RAIL		
7	3843506	

GENERAL INSTRUCTIONS

1. ASSEMBLE CROSS STRAPS TO OUTER (#1) INTERMEDIATE (#2) AND CENTER (#3) STRAPS AND COVER WITH RUBBER INSULATOR. SEE FIG. 2 FOR TYPICAL STRAP FASTENING
2. FASTEN ALL SUPPORTS TO BASES. SEE FIG. 3.
3. FASTEN RAILS TO SUPPORT ASSEMBLIES. SEE FIGS. 4, 5, AND 6.
4. PUT MASKING TAPE ON BOTTOM OF ALL SUPPORT BASES TO AVOID SCRATCHING ROOF PANEL.
5. LOCATE, CENTETPUNCH, AND DRILL TWO 1/8" DIA. PILOT HOLES FOR FRONT CENTER SUPPORT. THEN DRILL 1/2" DIA. HOLES THRU THE 1/8" DIA. PILOT HOLES, SEE FIG. 7. BE SURE TO USE A STOP ON THE DRILL TO PREVENT PIERCING THE HEADLINING. DE-BURR ALL HOLES.
6. PLACE CENTER GASKET OVER HOLES IN PANEL AND INSERT NUTS. PLACE RAIL ASSEMBLY ON ROOF PANEL AND FASTEN FRONT CENTER SUPPORT SEMI-TIGHT. ADJUST RAIL ASSEMBLY ON ROOF PANEL SO THAT THE SUPPORT BASES ARE EQUI-DISTANT FROM CENTER OF CAR.
7. TAPE BASES IN THIS POSITION AND SCRIBE HOLE LOCATIONS ON ROOF PANEL, AND REMOVE RAIL ASSEMBLY FROM ROOF.
8. CENTERPUNCH AND DRILL 1/8" DIA. PILOT HOLES THROUGH EACH SCRIBED HOLE AND ENLARGE HOLES TO 1/2" DIA.
9. POSITION REMAINING GASKETS OVER ALL HOLES AND INSERT NUTS THROUGH GASKETS INTO HOLES IN ROOF PANEL.
10. ASSEMBLE RAIL ASSEMBLY TO RACK ASSEMBLY. SEE FIG. 8.
11. CAREFULLY PLACE THE LUGGAGE CARRIER OVER THE GASKETS ON THE ROOF PANEL AND FASTEN CARRIER TO ROOF PANEL.

NOTE: USE LIGHT PRESSURE ON SCREWS UNTIL THREADS ENGAGE IN THE NUT TO AVOID PUSHING NUT THROUGH ROOF PANEL.

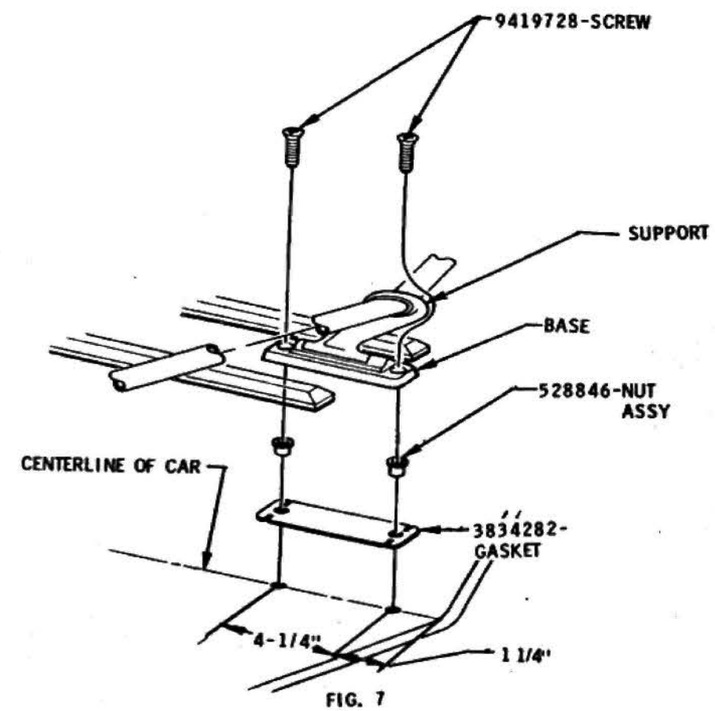

FIG. 7

FASTENING CENTER SUPPORT AND BASE TO ROOF

DATE	SYM	REVISION	DR.	CK.	DATE	SYM	REVISION	DR.	CK.	DATE	SYM	REVISION	DR.	CK.

INSTALLATION **LUGGAGE CARRIER**

DATE JAN. 7, 1964
DR. BY GALL-PARKER
CHECKED H. VAN PELT
APPR.
APPR.

FIRST USED 1965 — Oldsmobile GRAPHIC ILLUSTRATION — PAGE 1-8.1

SERIES F-85 — REF. 35V55 — PART NO. 387346

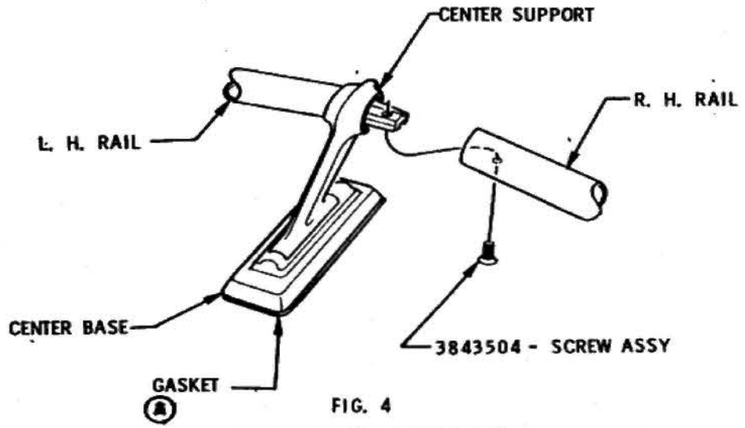

FIG. 4

TYPICAL FASTENING CENTER SUPPORT TO RAILS

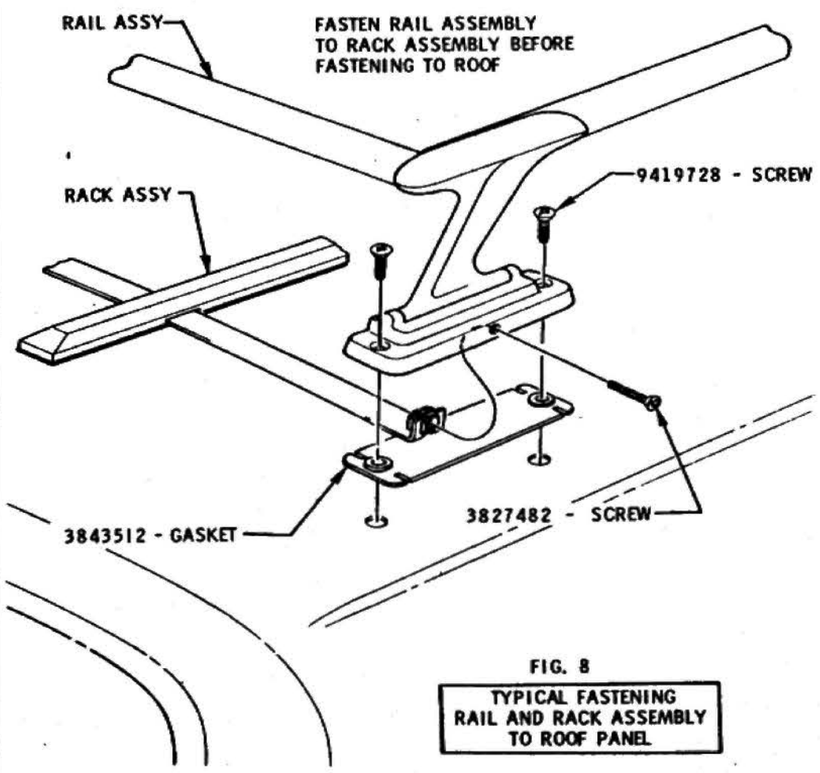

FIG. 8

TYPICAL FASTENING RAIL AND RACK ASSEMBLY TO ROOF PANEL

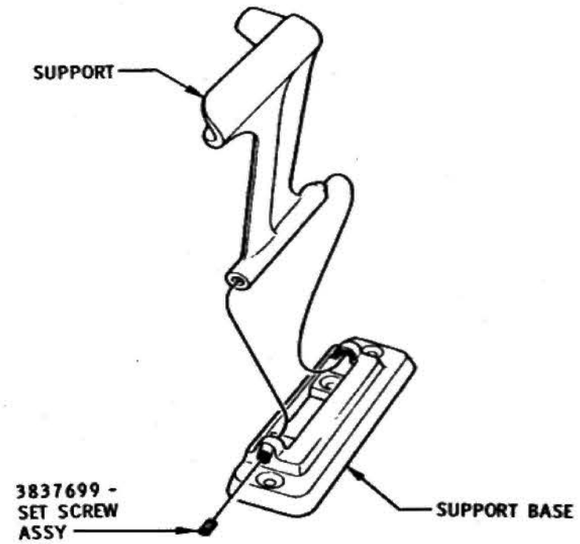

FIG. 3

TYPICAL SUPPORT AND BASE FASTENING

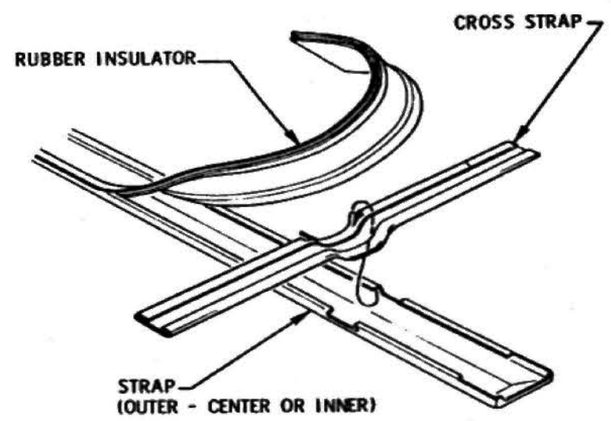

FIG. 2

TYPICAL STRAP FASTENING

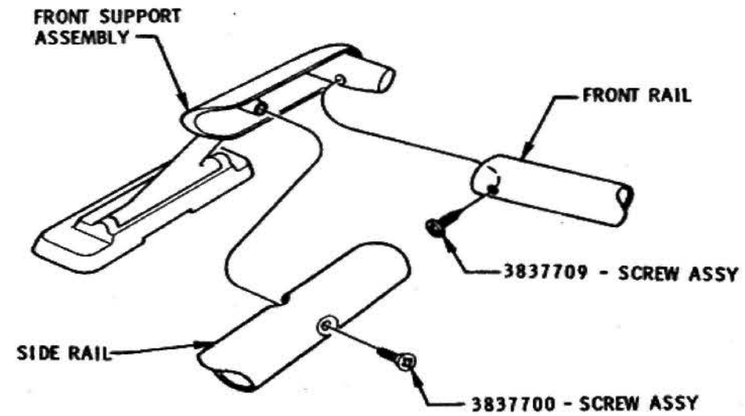

FIG. 5

TYPICAL FASTENING FRONT SUPPORT TO RAILS

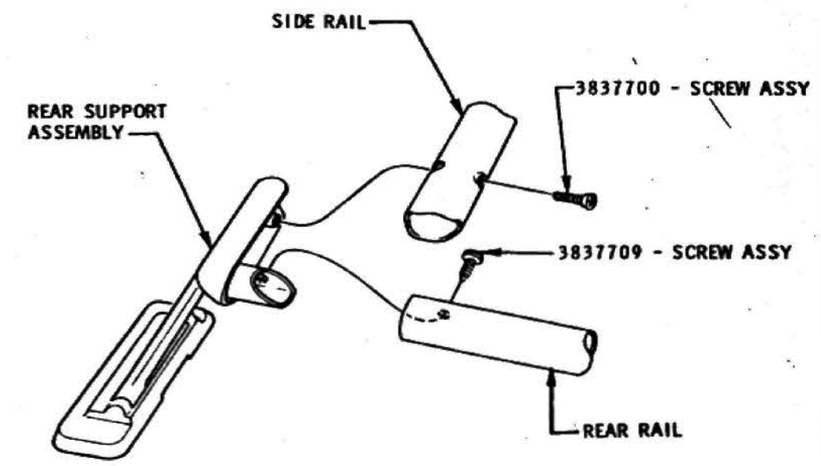

FIG. 6

TYPICAL FASTENING REAR SUPPORT TO RAILS

DATE	SYM	REVISION	DR.	CK.	DATE	SYM	REVISION	DR.	CK.	DATE	SYM	REVISION	DR.	CK.
										4-11-64	A	PART NO. REMOVED	WM	VP

INSTALLATION LUGGAGE CARRIER

DATE JAN 7, 1964
DR. BY GALL-PARKER
CHECKED H. VAN PELT
APPR.
APPR.

FIRST USED 1965

Oldsmobile GRAPHIC ILLUSTRATION

SERIES F 85

REF. 35YSS

PAGE 1-8.2

PART NO. 387346

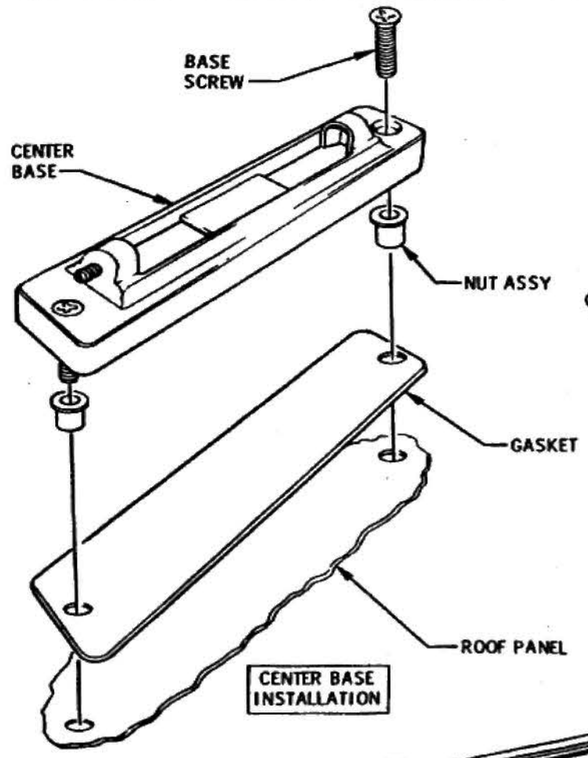

CENTER BASE INSTALLATION

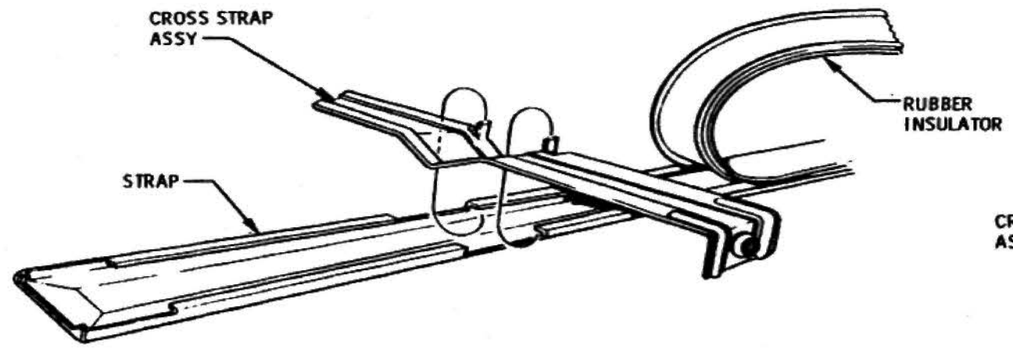

TYPICAL ATTACHMENT OF STRAP TO CROSS STRAP ASSY

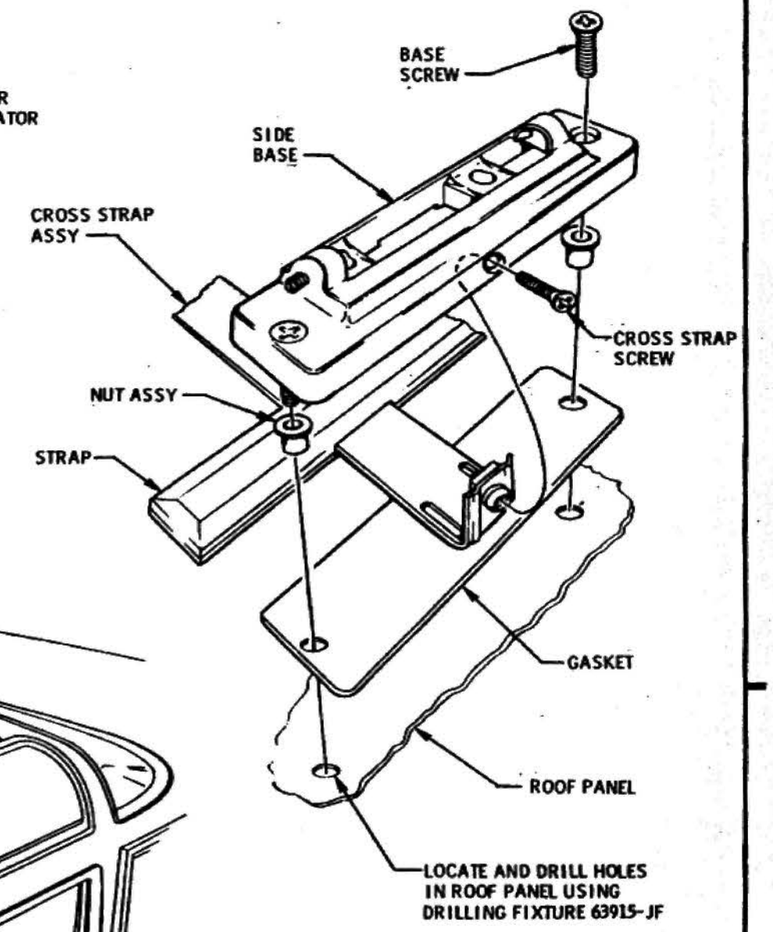

TYPICAL SIDE BASE & STRAP INSTALLATION

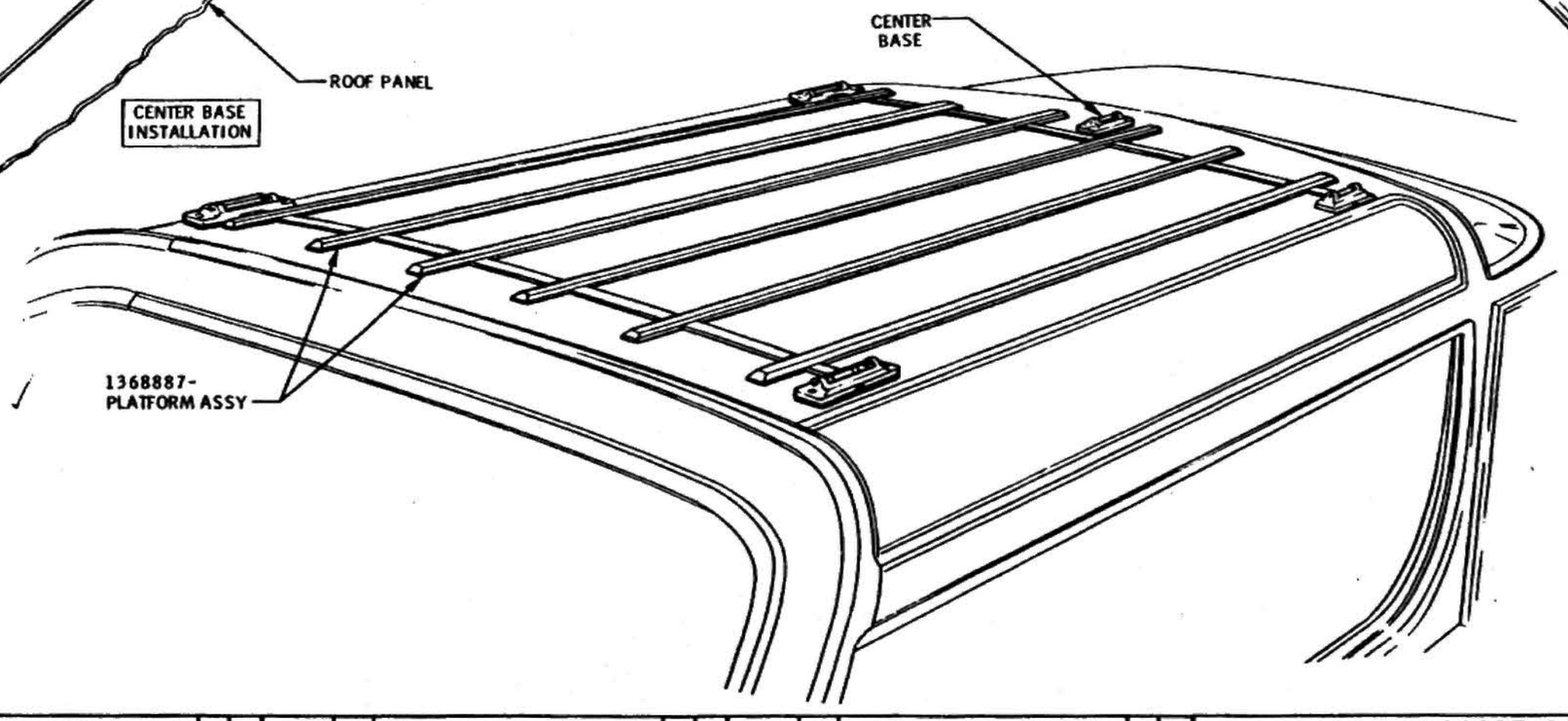

DATE	SYM	REVISION	DR.	CK.	DATE	SYM	REVISION	DR.	CK.	DATE	SYM	REVISION	DR.	CK.

INSTALLATION **LUGGAGE CARRIER-PLATFORM (EXTENDED WAGON)**

DATE APRIL 26, 1965
DR. BY B. PARKER
CHECKED H. VAN PELT
APPR.
APPR.

FIRST USED 1965 — Oldsmobile GRAPHIC ILLUSTRATION — PAGE 1-8.3

SERIES F-85 — REF. 35Y56 — PART NO. 387346

PARTS	SYM.	REVISION RECORD	APPROVED	DR.	CK.
21964		WAS BD-34393		DW	RZ
	A				

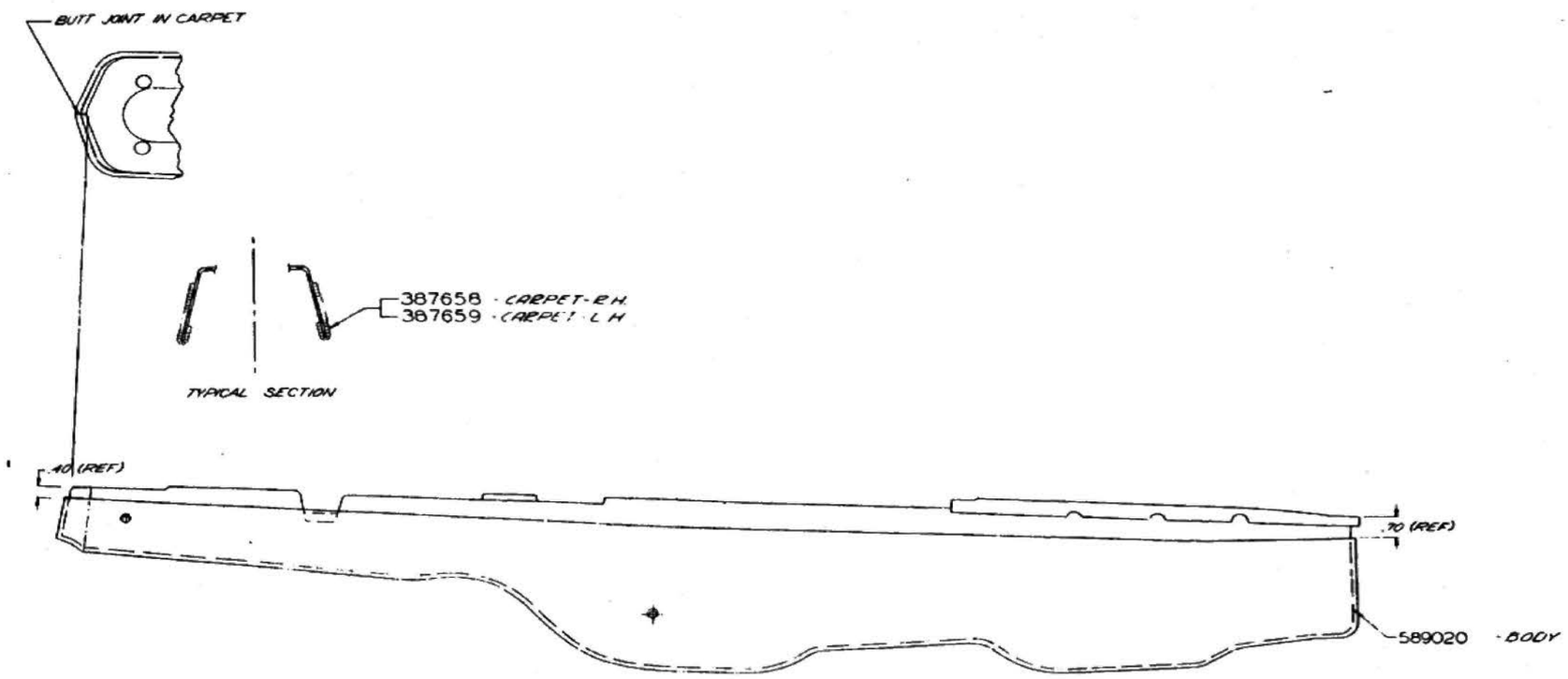

SECURE CARPET TO CONSOLE BODY WITH CEMENT #9981192 (A)

TOLERANCES UNLESS OTHERWISE SPECIFIED ± .06 ALLOWED ON TWO PLACE DECIMALS ± .010 ALLOWED ON THREE PLACE DECIMALS ON ALL CASTINGS AND FORGINGS ALLOW FOR FINISH AS FOLLOWS F_1-.030; F_2-.06; F_3-.09; F_4-.12 ETC.

COMMERCIAL TOLERANCES APPLY TO SHEET METAL GAUGES, TUBING, ROLLED, DRAWN OR EXTRUDED SECTIONS & STANDARD PARTS

DO NOT SCALE

DATE FEB 17, 1964	DR. R. ACHTERHOF
SCALE NONE	CK.
FIRST USED 1965	APPR.
REFERENCE	APPR.
MATERIAL SPEC. —	

NAME: BODY SHOP ASSEMBLY-CONSOLE

DIST. B — PART NO. 388086

AW

NO. 388086
SHEET 1 OF 1
LAST CHANGE

OLDSMOBILE DIVISION
GENERAL MOTORS CORPORATION
LANSING, MICHIGAN

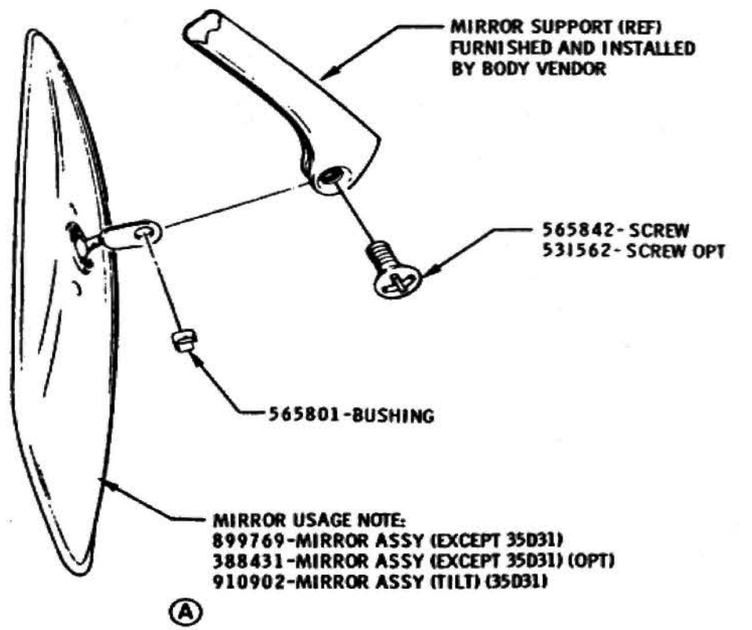

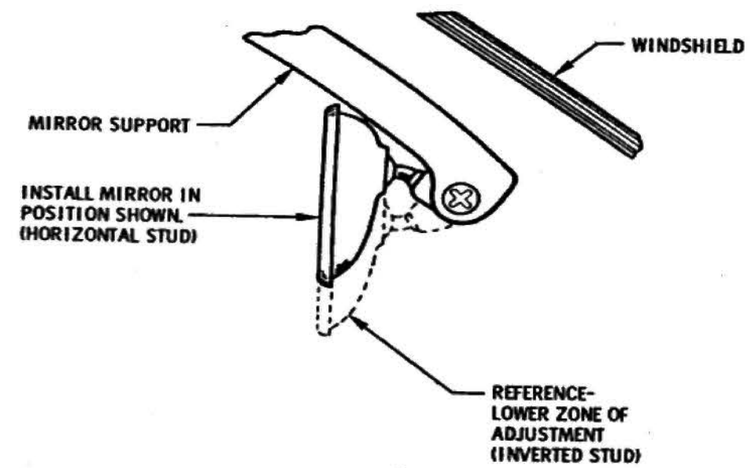

MIRROR INSTALLED
(SIDE VIEW)

DATE	SYM	REVISION	DR.	CK.	DATE	SYM	REVISION	DR.	CK.	DATE	SYM	REVISION	DR.	CK.
										4-28-65	A	9775964 MIRROR REMOVED	CG	VP

INSTALLATION	INSIDE REAR VIEW MIRROR		
DATE JUNE 2, 1964	FIRST USED 1965	Oldsmobile GRAPHIC ILLUSTRATION	PAGE 1-10.1
DR. BY JOSEPH V. GALL			
CHECKED H. VAN PELT	SERIES F85	REF. 1A2E 35D31	PART NO. 389404
APPR.			
APPR.			

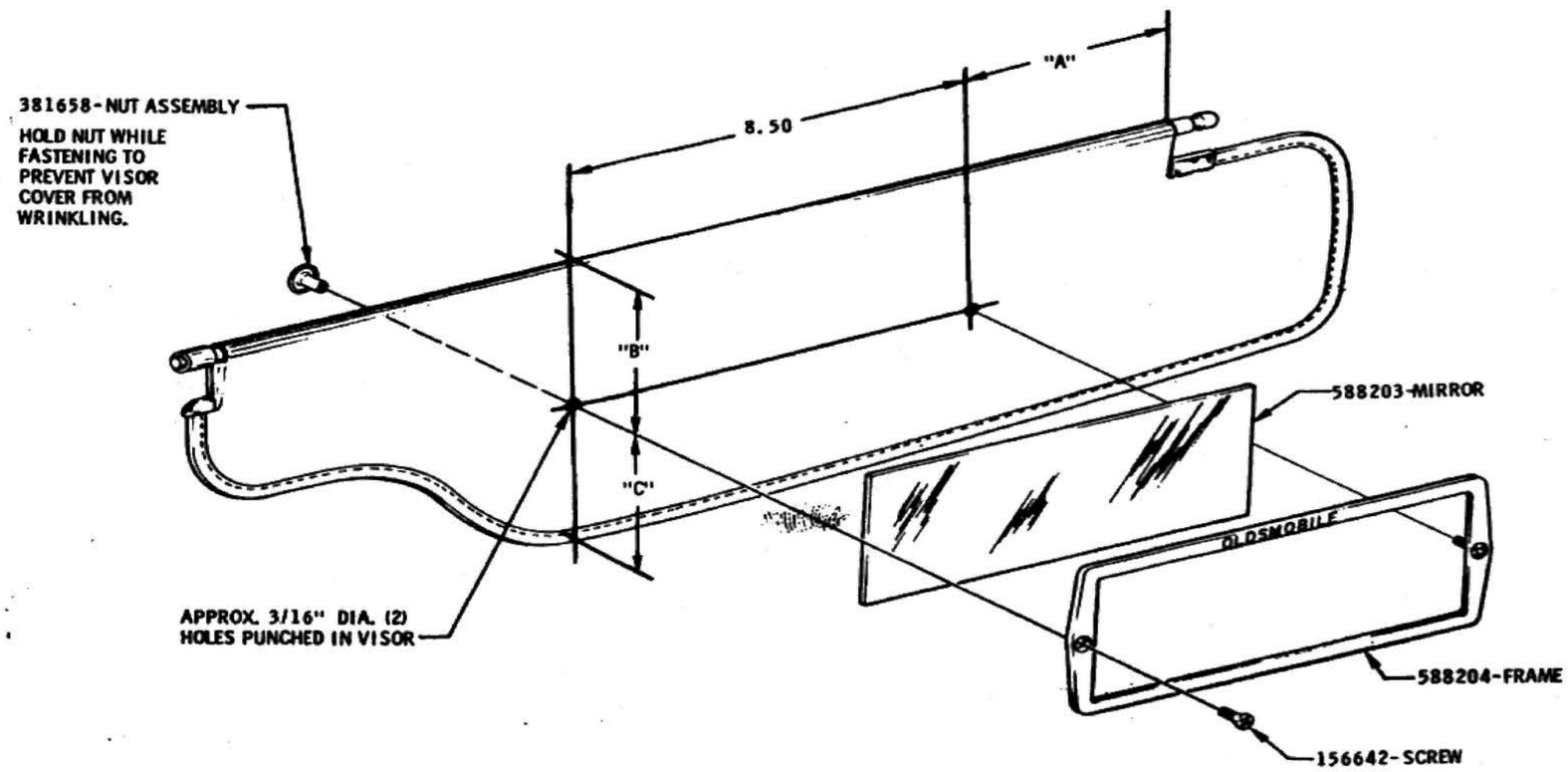

FULL SIZE CAR		F-85	
SEDANS	CONV.	SEDANS	CONV.
A - 2.25	2.25	1.00	.25
B - 3.00		2.50	2.62
C	2.50		

INSTALL MIRROR AND FRAME PARALLEL TO UPPER (STEEL ROD) EDGE OF SUNSHADE, EXCEPT ON FULL SIZE CAR CONVERTIBLES, WHERE THE MIRROR AND FRAME SHOULD BE PARALLEL TO LOWER (STITCHED) EDGE.

DATE	SYM	REVISION	DR.	CK.	DATE	SYM	REVISION	DR.	CK.	DATE	SYM	REVISION	DR.	CK.

INSTALLATION **VISOR VANITY MIRROR**

DATE AUGUST 19, 1964
DR. BY KESTER-PARKER
CHECKED H. VAN PELT
APPR.
APPR.

FIRST USED 1965

Oldsmobile Graphic Illustration

PAGE 1-11.1

SERIES F-85 & BIG CAR

REF. 35Y60

PART NO. 390293

OLDSMOBILE DIVISION GENERAL MOTORS CORPORATION LANSING 21, MICHIGAN

INSTALLATION OF OLDSMOBILE REMOTE CONTROLLED MIRROR

PART NO. 386345

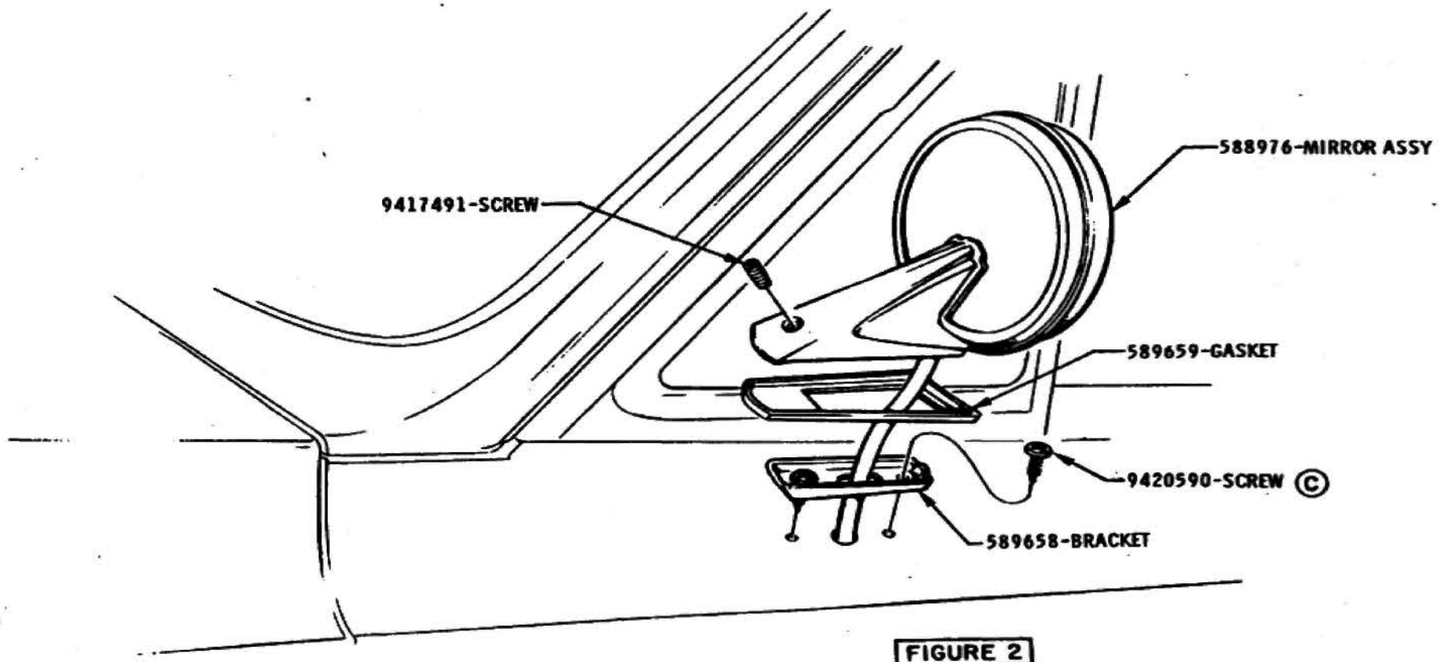

FIGURE 2

MIRROR INSTALLATION TO L.H. DOOR PANEL

Ⓐ
Ⓑ

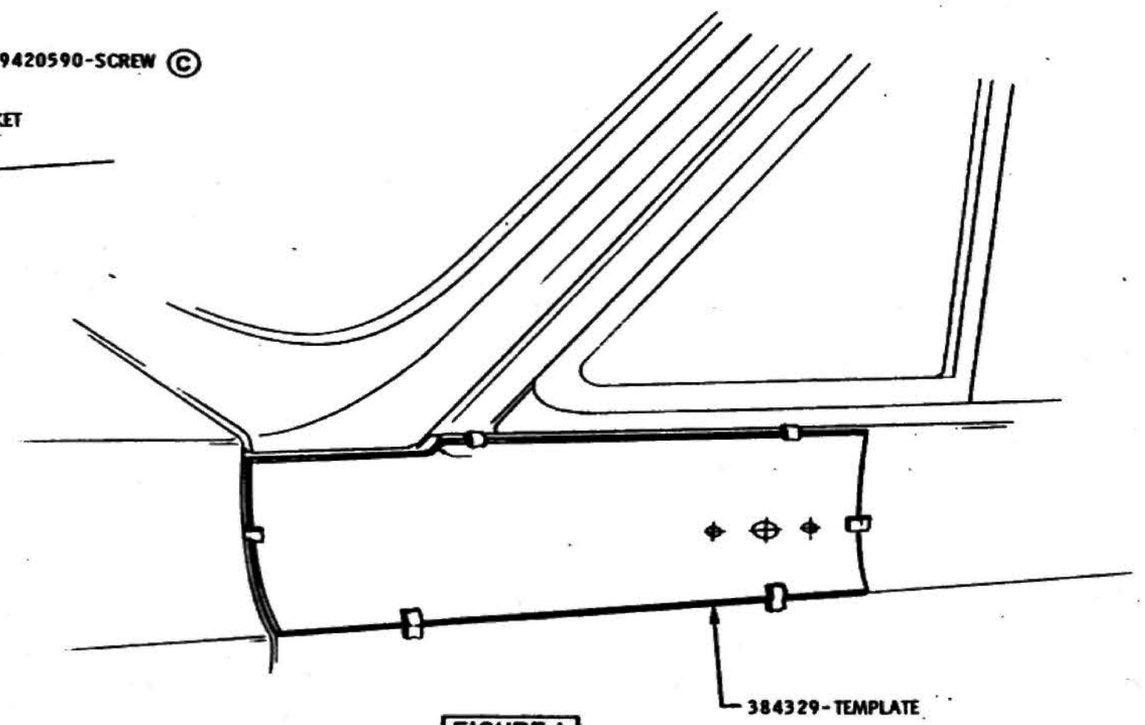

FIGURE 1

TEMPLATE APPLICATION MIRROR MOUNTING

DATE	SYM	REVISION	DR.	CK.	DATE	SYM	REVISION	DR.	CK.	DATE	SYM	REVISION	DR.	CK.
										9-9-64	C	WAS 9420721-SCREW	BAVP	
										4-15-64	B	NOTE REMOVED	WMVP	
										3-28-64	A	NOTE REVISED	GBVP	

INSTALLATION	REMOTE CONTROLLED MIRROR		2 SHEETS
DATE NOV. 6, 1963	FIRST USED 1965	Oldsmobile GRAPHIC ILLUSTRATION	PAGE 1-12.1
DR. BY B. PARKER			
CHECKED H. VAN PELT			
APPR.	SERIES F 85	REV. 36083	PART NO. 386345
APPR.			

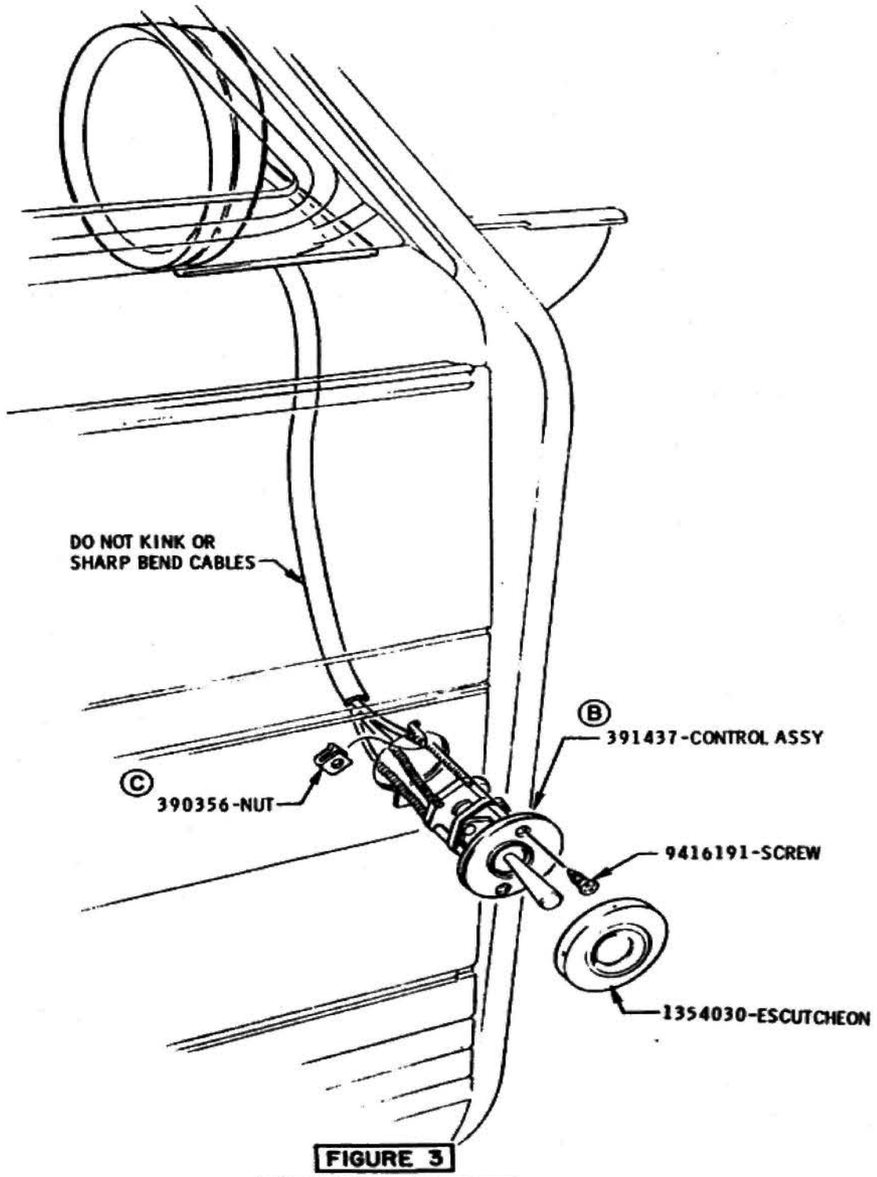

FIGURE 3

CONTROL INSTALLATION ON L. H. DOOR PANEL

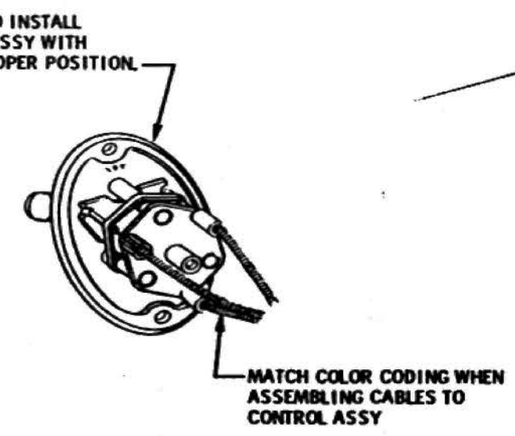

FIGURE 4

CONTROL ASSY REAR VIEW

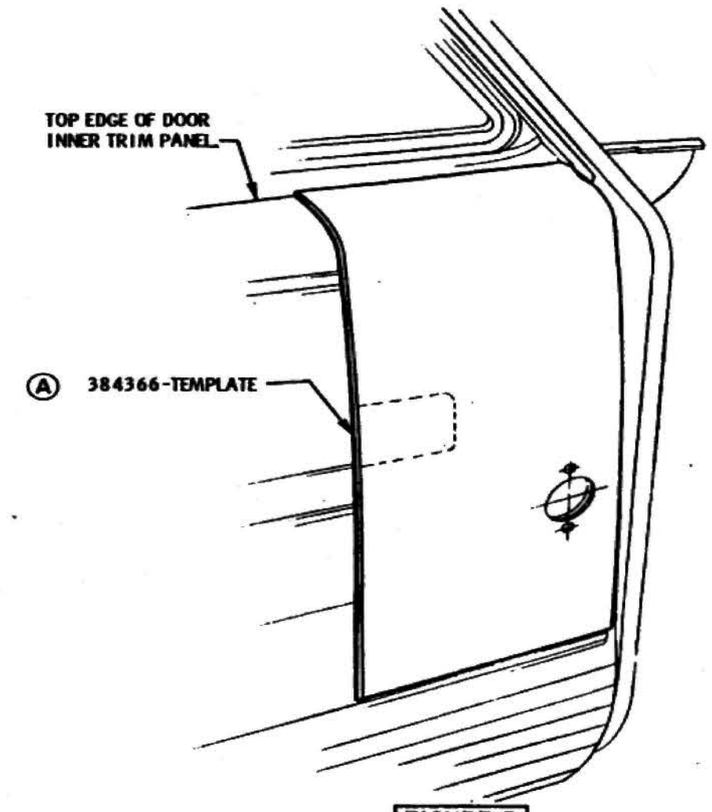

FIGURE 5

TEMPLATE APPLICATION L.H. DOOR TRIM PANEL CUTOUT

DATE	SYM	REVISION	DR.	CK.	DATE	SYM	REVISION	DR.	CK.	DATE	SYM	REVISION	DR.	CK.
										4.28.65	C	WAS 1354406 NUT	KG	VP
										1-6-65	B	WAS 1354029-CONT. ASSY	KG	VP
										3-28-64	A	TEMPLATE NO. ADDED	GL	VP

INSTALLATION	REMOTE CONTROLLED MIRROR		
DATE NOV 6, 1963	FIRST USED 1965	Oldsmobile GRAPHIC ILLUSTRATION	PAGE 1-12.2
DR. BY B. PARKER			
CHECKED H. VAN PELT	SERIES F 85	REF. 35033	PART NO. 386345
APPR.			
APPR.			

OLDSMOBILE DIVISION GENERAL MOTORS CORPORATION LANSING 21, MICHIGAN

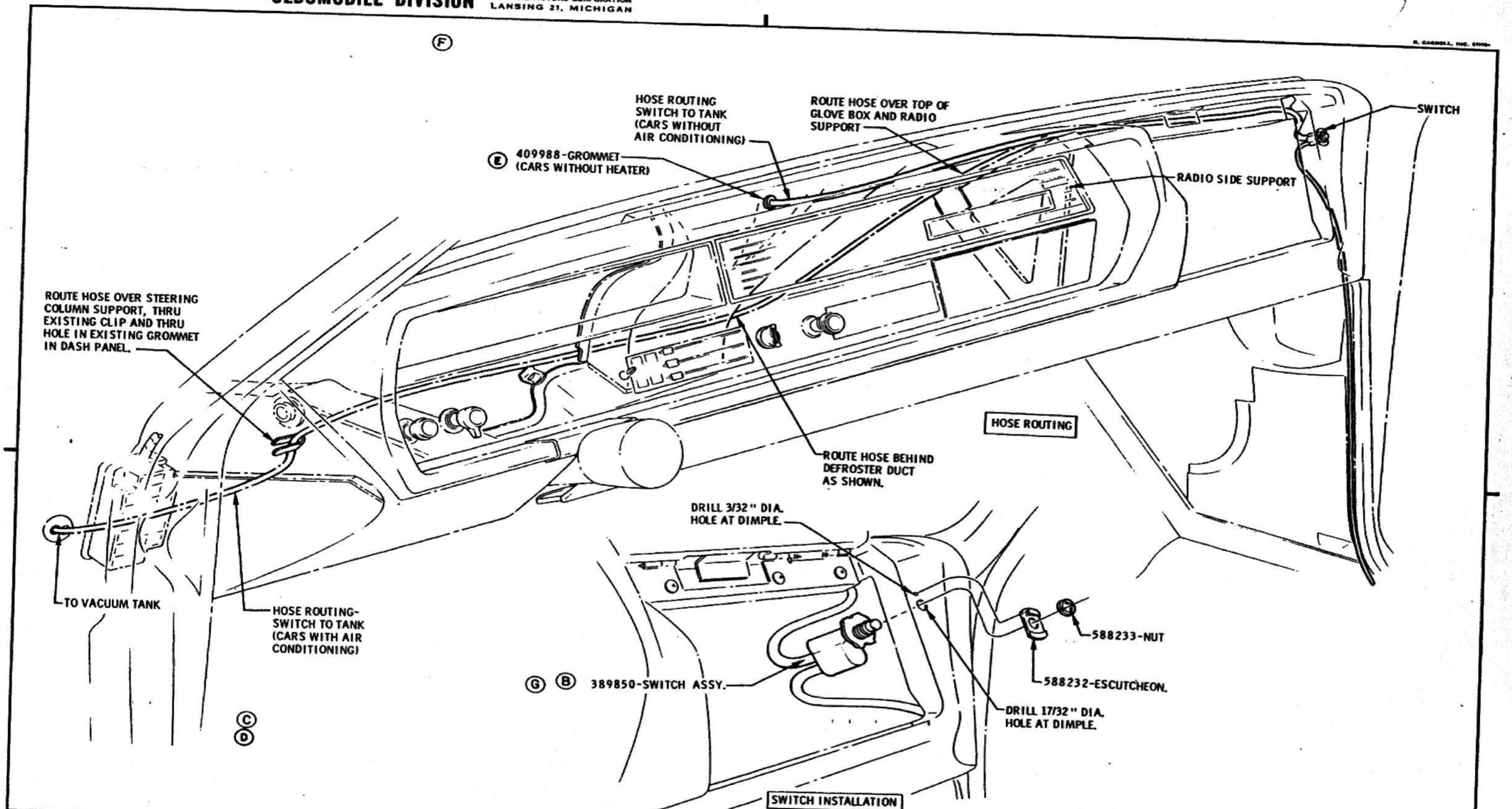

DATE	SYM	REVISION	DR.	CK.	DATE	SYM	REVISION	DR.	CK.	DATE	SYM	REVISION	DR.	CK.
										4-11-64	E	GROMMET ADDED	WM	VP
										4-11-64	D	GROMMET NOTE REM'VD	WM	VP
										2-27-64	C	NOTE ADDED	CB	VP
					7-31-64	G	WAS 4884799-SW. ASSY	BP	VP	1-23-64	B	WAS 589481-SWITCH	BP	VP
					5-14-64	F	TITLE REMOVED	BP	VP	1-4-64	A	REVISED & REDRAWN	OH	VP

INSTALLATION — **TRUNK LID RELEASE**

DATE NOV. 13, 1963
DR. BY GOODWIN - PACKER
CHECKED H. VAN PELT
APPR.
APPR.

FIRST USED 1965
SERIES F 85
Oldsmobile GRAPHIC ILLUSTRATION
REF. 35 A 91
PAGE 1-13.1
PART NO. 386545

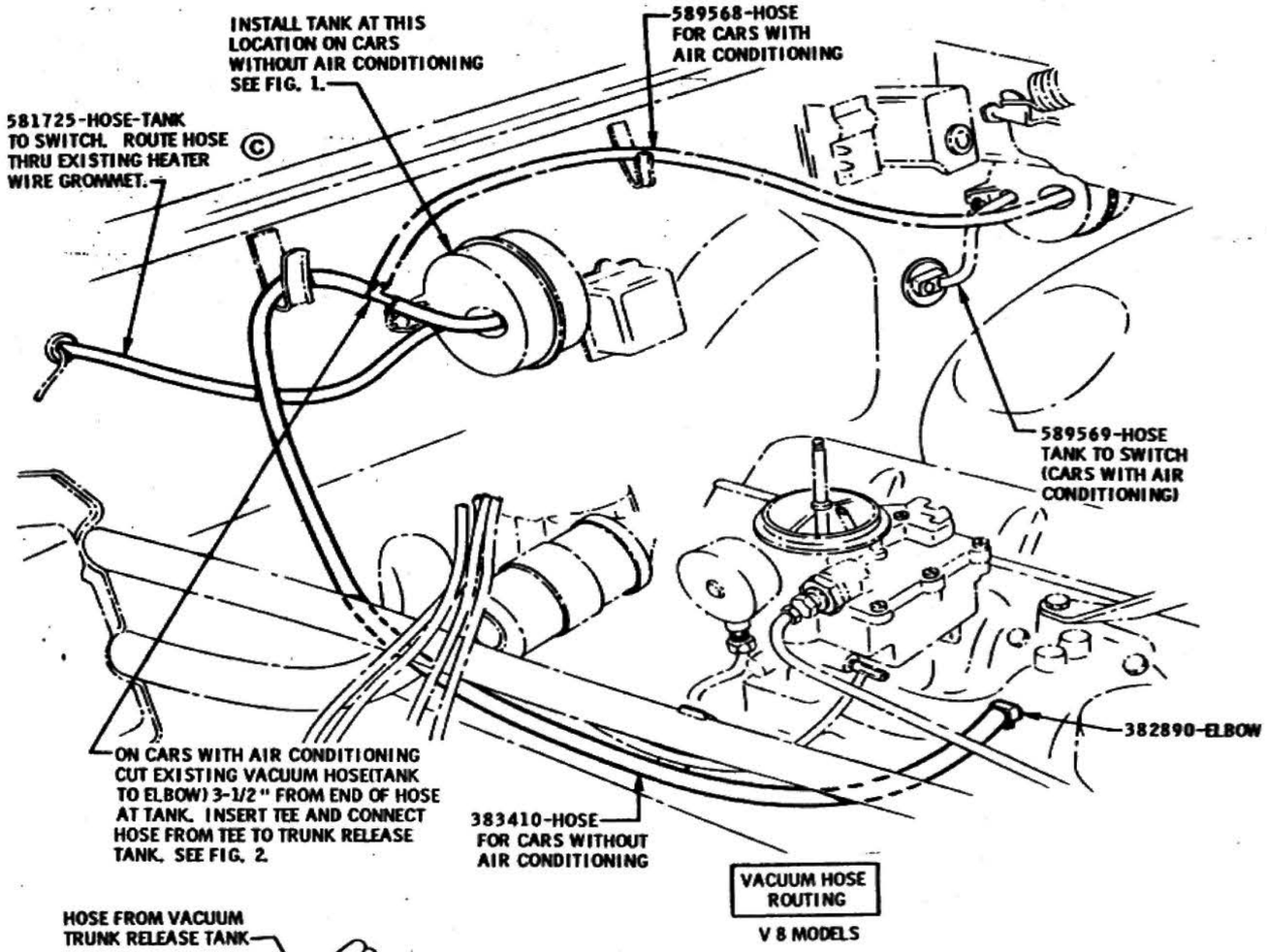

VACUUM HOSE ROUTING

V 8 MODELS

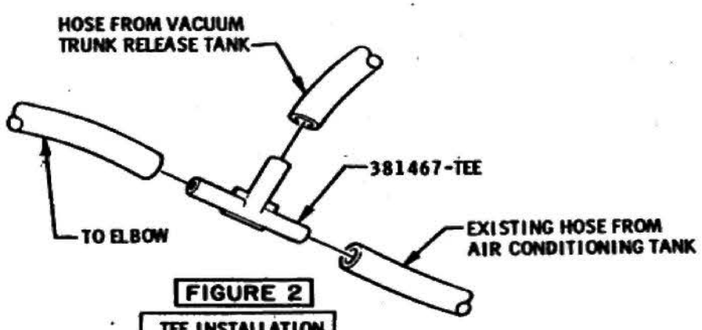

FIGURE 2

TEE INSTALLATION

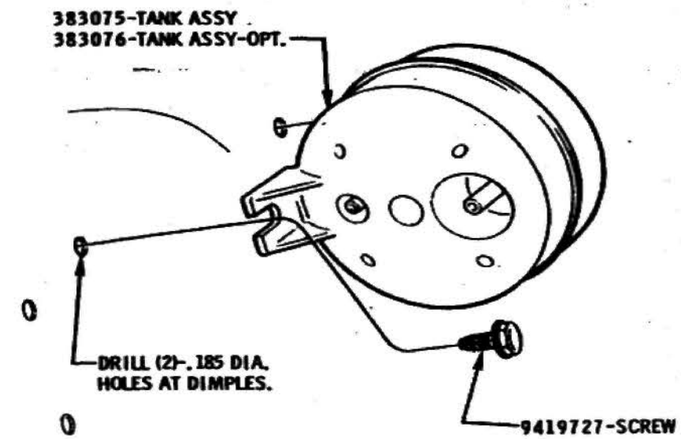

FIGURE 1

TYPICAL TANK INSTALLATION

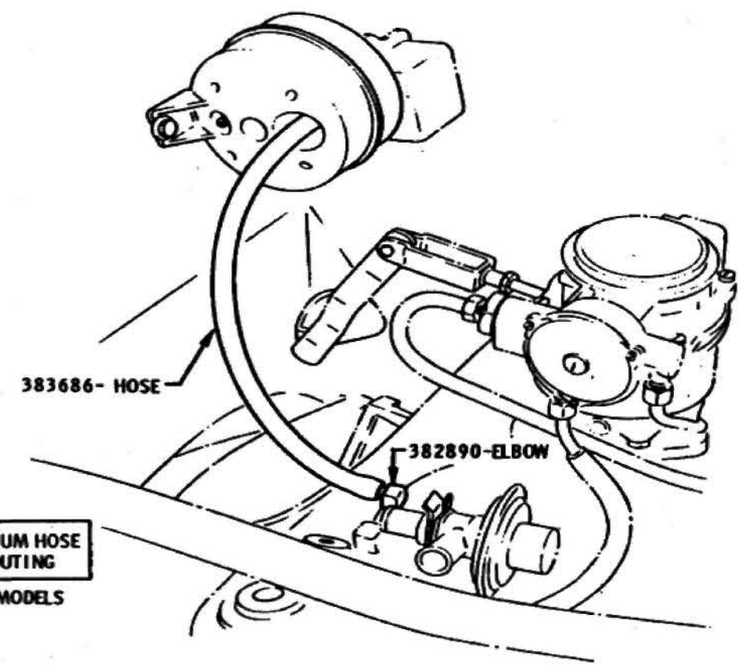

VACUUM HOSE ROUTING

V 6 MODELS

Ⓑ Ⓐ

DATE	SYM	REVISION	DR.	CK.	DATE	SYM	REVISION	DR.	CK.	DATE	SYM	REVISION	DR.	CK.
										9-18-64	C	NOTE REVISED		VP
										5-14-64	B	VIEWS FROM PAGE 1-13.3 ADDED		VP
										5-14-64	A	DEALER VIEWS REMOVED		VP

INSTALLATION **TRUNK LID RELEASE**

DATE NOV. 13, 1963

DR. BY GOODWIN-PARKER

CHECKED H. VAN PELT

APPR.

APPR.

FIRST USED 1965

Oldsmobile GRAPHIC ILLUSTRATION

SERIES F 85

REF. 35 A 91

PAGE 1-13.2

PART NO. 386545

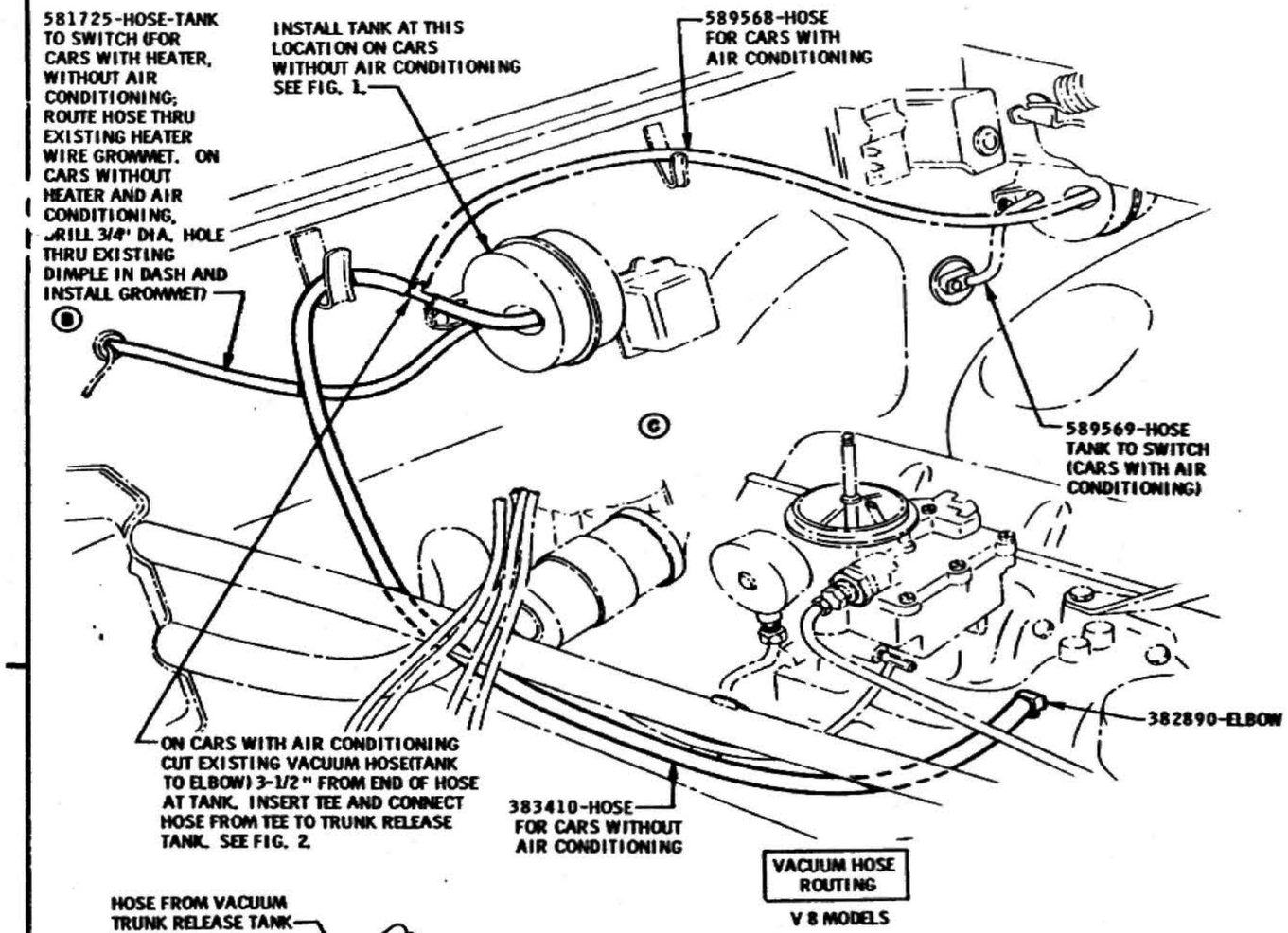

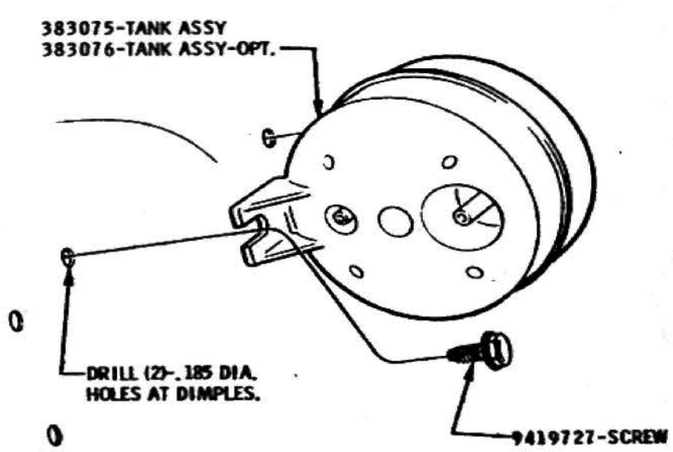

FIGURE 1

TYPICAL TANK INSTALLATION

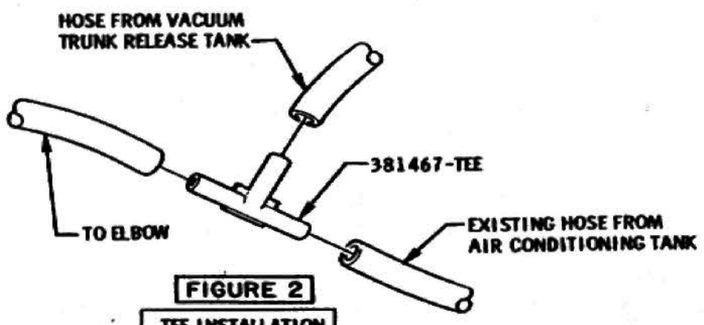

FIGURE 2

TEE INSTALLATION

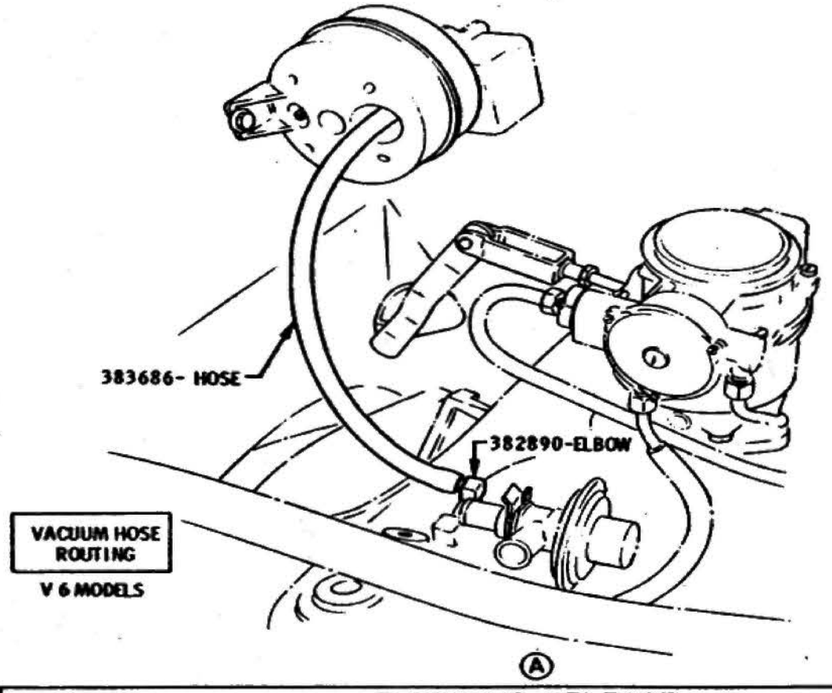

DATE	SYM	REVISION	DR.	CK.	DATE	SYM	REVISION	DR.	CK.	DATE	SYM	REVISION	DR.	CK.
										5-7-64	C	VIEW REVISED TO DETAIL	GB	VP
										4-11-64	B	NOTE REVISED	WM	VP
										11-20-63	A	WAS POWER TRUNK RELEASE	GB	VP

INSTALLATION	TRUNK LID RELEASE		
DATE NOV. 20. 1963	FIRST USED 1965	Oldsmobile GRAPHIC ILLUSTRATION	PAGE 1-13.3
DR. BY GOODWIN-PARKER			
CHECKED H. VAN PELT	SERIES F 85	REF. 35 A 91	PART NO. 386545
APPR.			
APPR.			

THIS SHEET FOR DEALER USE ONLY

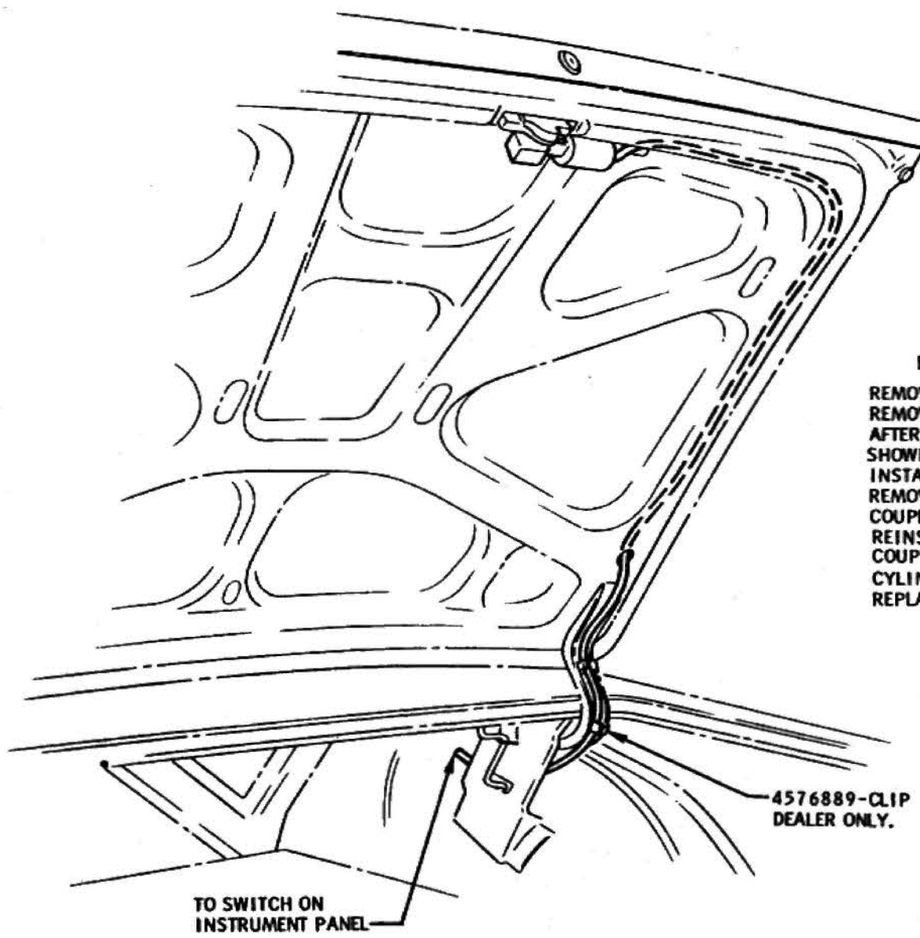

TRUNK COMPARTMENT HOSE ROUTING

INSTALLATION OF CYLINDER ASSY

REMOVE LOCK RETAINER.
REMOVE CYLINDER ASSY.
AFTER ROUTING HOSE AS PREVIOUSLY SHOWN, ATTACH TO VACUUM CYLINDER ASSY.
INSTALL VACUUM CYLINDER ASSY
REMOVE LOCK SHAFT AND REPLACE WITH COUPLING ASSY.
REINSTALL LOCK CYLINDER ASSY, INSERTING COUPLING ASSY SHAFT INTO SLOT IN CYLINDER ASSY.
REPLACE LOCK RETAINER.

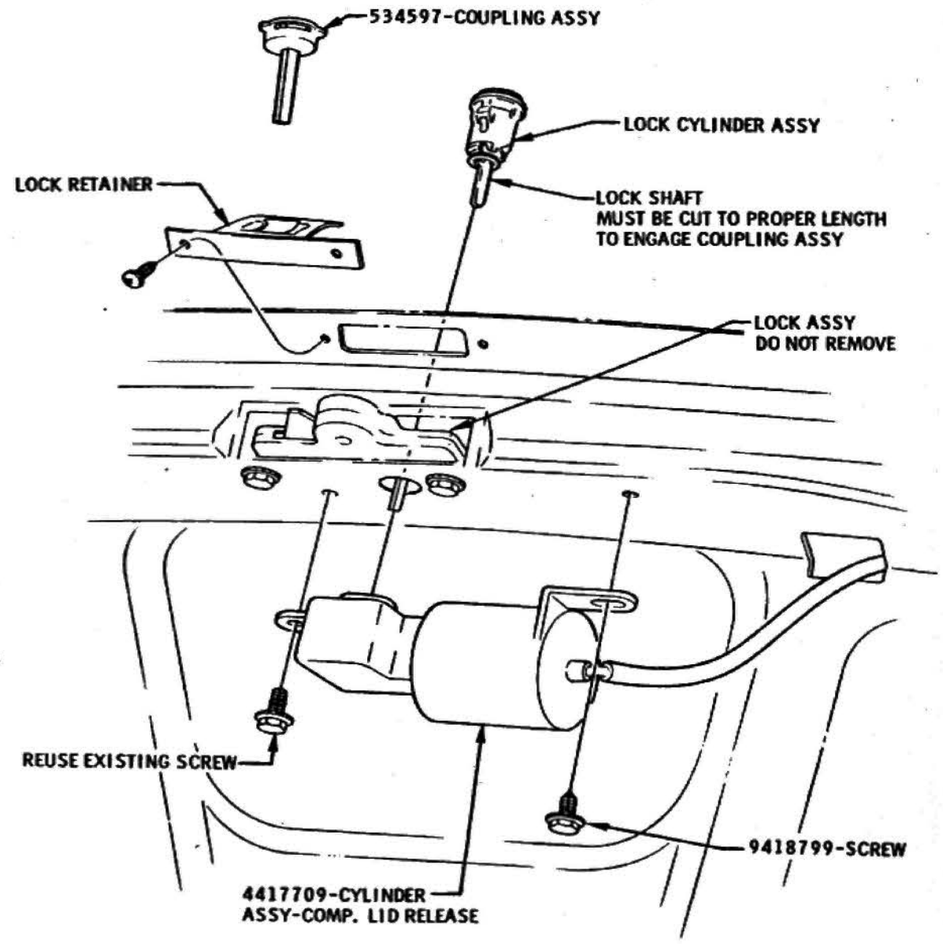

VACUUM CYLINDER INSTALLATION

DATE	SYM	REVISION	DR.	CK.	DATE	SYM	REVISION	DR.	CK.	DATE	SYM	REVISION	DR.	CK.

INSTALLATION — **TRUNK LID RELEASE**

DATE NOV. 13, 1963
DR. BY GOODWIN-PARKER
CHECKED H. VAN PELT
APPR.
APPR.

FIRST USED 1965 — Oldsmobile GRAPHIC ILLUSTRATION — PAGE 1-13.4

SERIES F 85 — REF. 35 A 91 — PART NO. 386545

I. P. PARTS

DRAWING NO.	DRAWING NAME	PAGE NO.
387287	INSTRUMENT PANEL	1A2B - 2.1
387570	ELECTRIC CLOCK	1A2B - 3.1
589062	GLOVE BOX ASSEMBLY	1A2B - 4.1

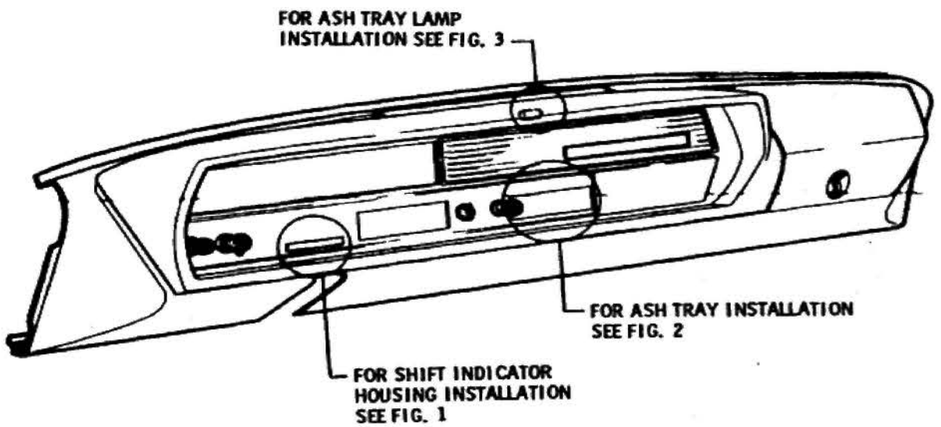

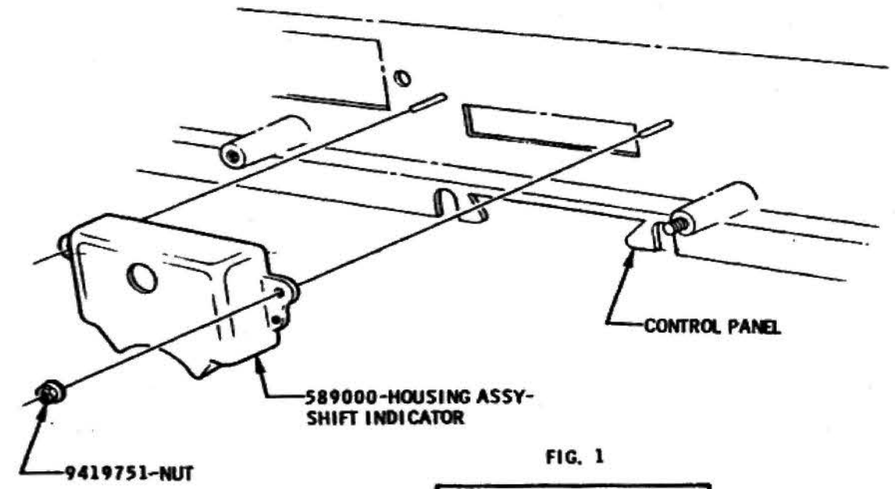

FIG. 1

SHIFT INDICATOR HOUSING INSTALLATION

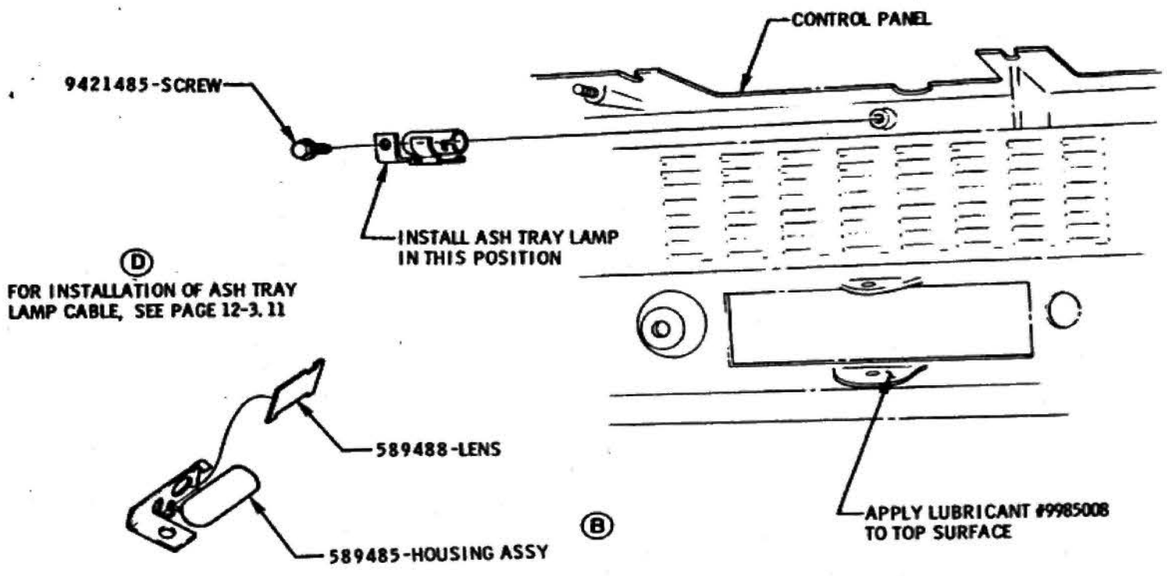

INSTALLATION OF LENS TO ASH TRAY LAMP HOUSING

FIG. 3

ASH TRAY LAMP INSTALLATION

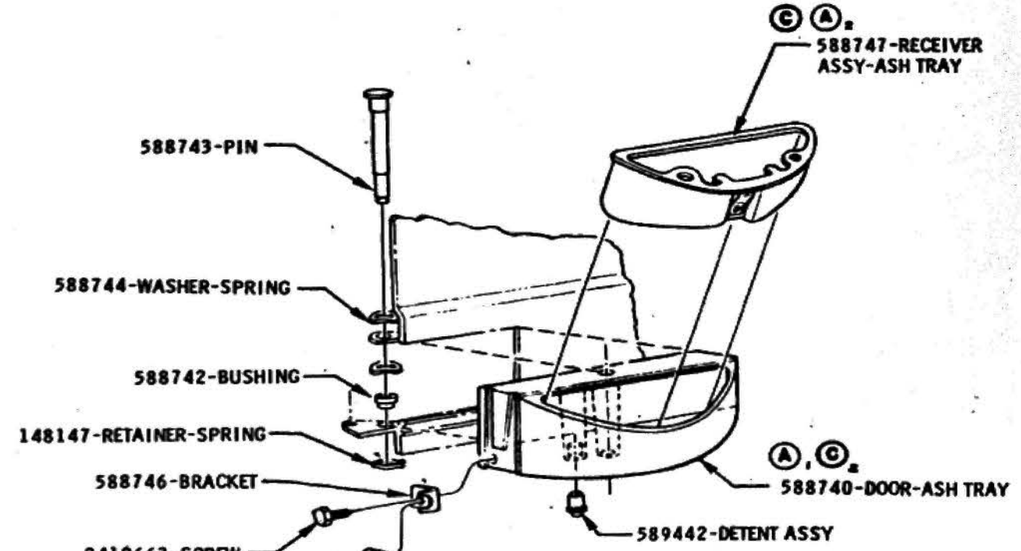

FIG. 2

ASH TRAY INSTALLATION

DATE	SYM	REVISION	DR.	CK.	DATE	SYM	REVISION	DR.	CK.	DATE	SYM	REVISION	DR.	CK.
										8-18-64	D	NOTE ADDED	CM	VP
										5-14-64	C₂	PART NOS. REVISED	CM	VP
										5-4-64	B	VIEWS REV. & REDRAWN	CM	VP
										4-13-64	A₂	PART NOS. REVISED	WM	VP

INSTALLATION — INSTRUMENT PANEL

DATE JAN. 13, 1964
DR. BY C.E. MAY
CHECKED H. VAN PELT
APPR.
APPR.

FIRST USED 1965
Oldsmobile GRAPHIC ILLUSTRATION
SERIES F85
REF. IACB
PAGE IA2B-2.3
PART NO. 387287

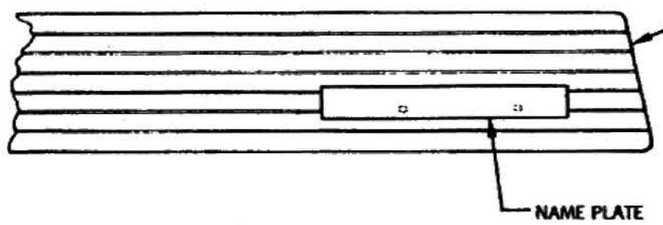

(B), RADIO SPEAKER GRILL-LOCATIONS OF NAME PLATES & SWITCHES ON PANEL SAME AS FOR CARS WITHOUT SPEAKER GRILL.

NAME PLATE LOCATION WITH NO ACCESSORY SWITCHES

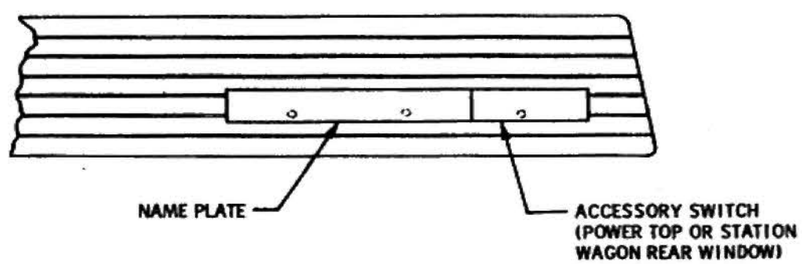

NAME PLATE AND SWITCH LOCATION WITH ONE ACCESSORY SWITCH

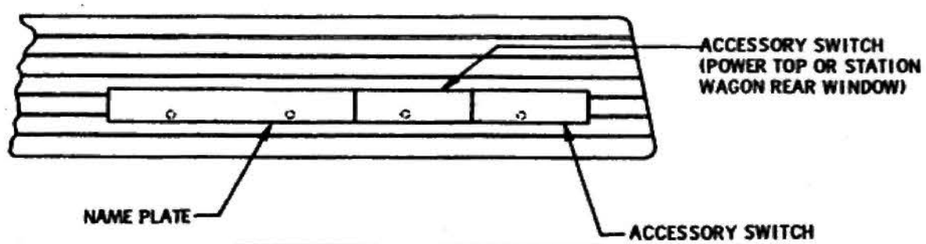

NAME PLATE AND SWITCH LOCATIONS WITH TWO ACCESSORY SWITCHES

(B)₂ NOTE:

FOR SWITCH & NAME PLATE DRILLING LOCATION INFORMATION, SEE DWG BD-34905.

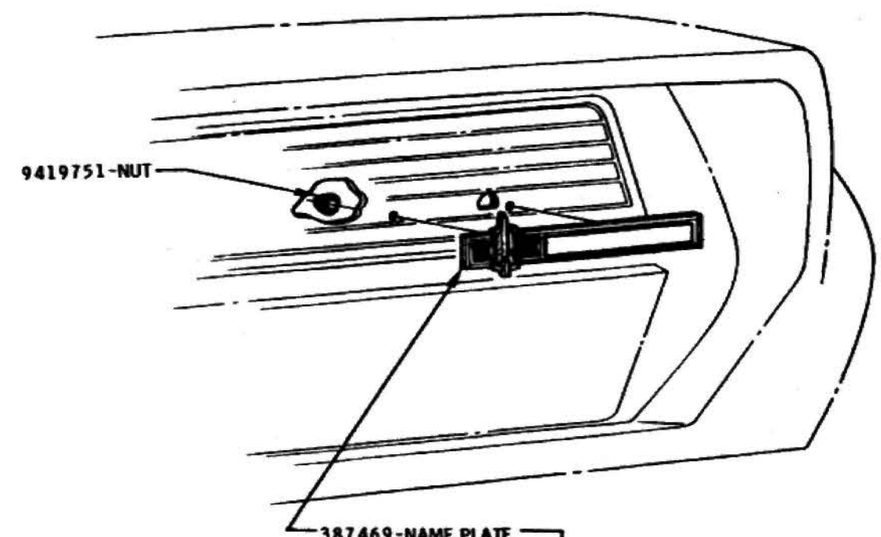

387469-NAME PLATE F-85
387471-NAME PLATE F-85 DELUXE
387472-NAME PLATE CUTLASS
(C) 391269-NAME PLATE VISTA CRUISER
(A) 389758-NAME PLATE 442

SEE PARTS LIST FOR OTHER USAGES

DATE	SYM	REVISION	DR.	CK.	DATE	SYM	REVISION	DR.	CK.	DATE	SYM	REVISION	DR.	CK.
										1-9-65	C	WAS 387470 NAME PLATE	JLG	VP
										7-9-64	B₂	NOTES ADDED	HW	VP
										7-9-64	A	389758-NAME PLATE ADDED	BG	VP

INSTALLATION — INSTRUMENT PANEL

DATE JAN. 13, 1964 — DR. BY C.E. MAY — CHECKED H. VAN PELT — APPR. — APPR.

FIRST USED 1965 — Oldsmobile GRAPHIC ILLUSTRATION — PAGE IA2B-2.4

SERIES F85 — REF. IA2B — PART NO. 387287

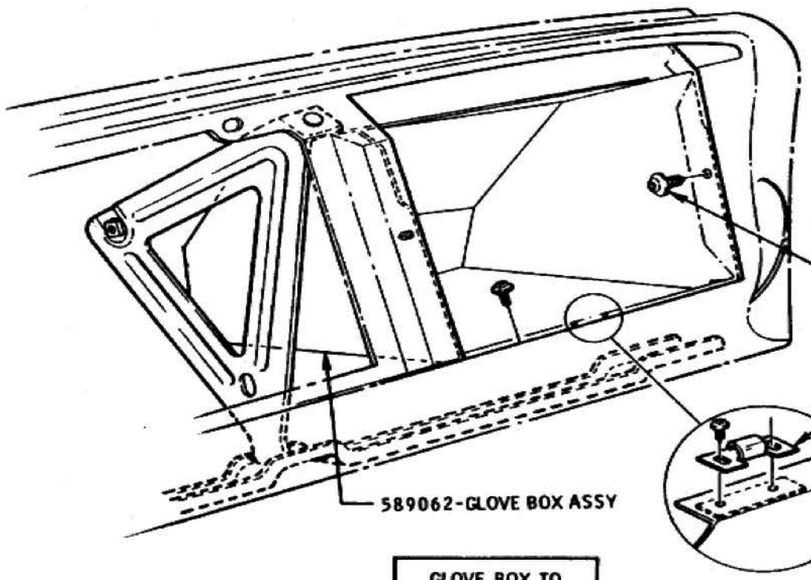

ADJUST STRIKER SO THAT COMPRESSION OF RUBBER BUMPERS IS ATTAINED. UPON DEPRESSING LOCK CYLINDER, DOOR MUST OPEN WITH NO ASSIST. (D)

GLOVE BOX TO INSTRUMENT PANEL

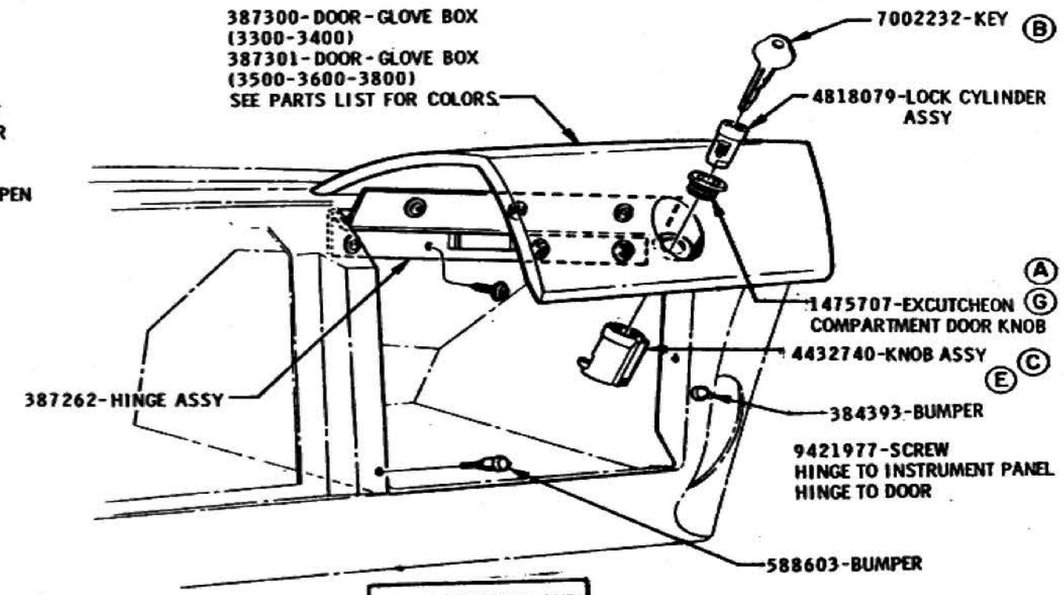

GLOVE BOX DOOR AND HINGE INSTALLATION

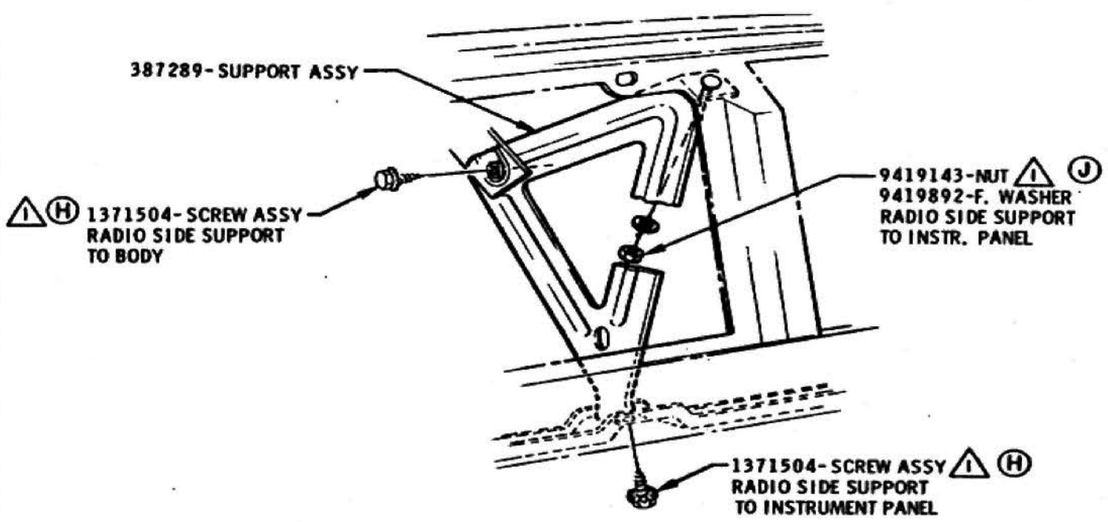

RADIO SIDE SUPPORT INSTALLATION

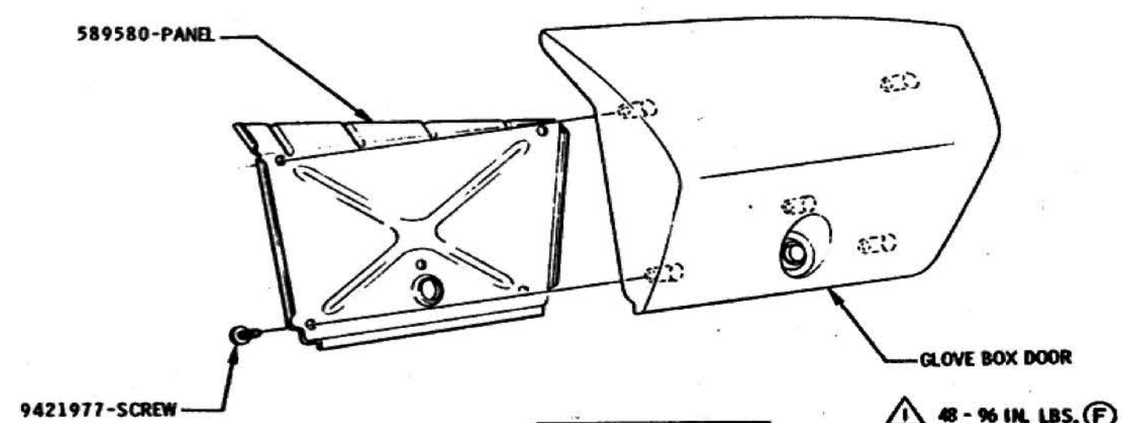

△ 48 - 96 IN. LBS. (F)

GLOVE BOX DOOR INNER PANEL INSTALLATION

DATE	SYM	REVISION	DR.	CK.	DATE	SYM	REVISION	DR.	CK.	DATE	SYM	REVISION	DR.	CK.
					5-19-65	J	WAS 9421403 NUT	LEG	VP	2-27-64	D	STRIKER NOTE ADDED	CB	VP
					4-20-65	H	WAS 9419566 - BOLT	GV	VP	2-11-64	C	WAS 4615317 KNOB ASSY	CB	VP
					2-11-65	G	WAS 387677 ESCUTCHEON	JEC	VP	2-11-64	B	7002232 KEY ADDED	CB	VP
					6-16-64	F	TORQUE ADDED	BB	VP	2-11-64	A	WAS 1475707 ESC.	CB	VP

INSTALLATION **INSTRUMENT PANEL**

DATE JAN. 13, 1964
DR. BY C.E. MAY
CHECKED H. VAN PELT
APPR.
APPR.

FIRST USED 1965
SERIES F85
Oldsmobile GRAPHIC ILLUSTRATION
REF. IA2B
PAGE IA2B-2.5
PART NO. 387287

OLDSMOBILE DIVISION GENERAL MOTORS CORPORATION LANSING 21, MICHIGAN

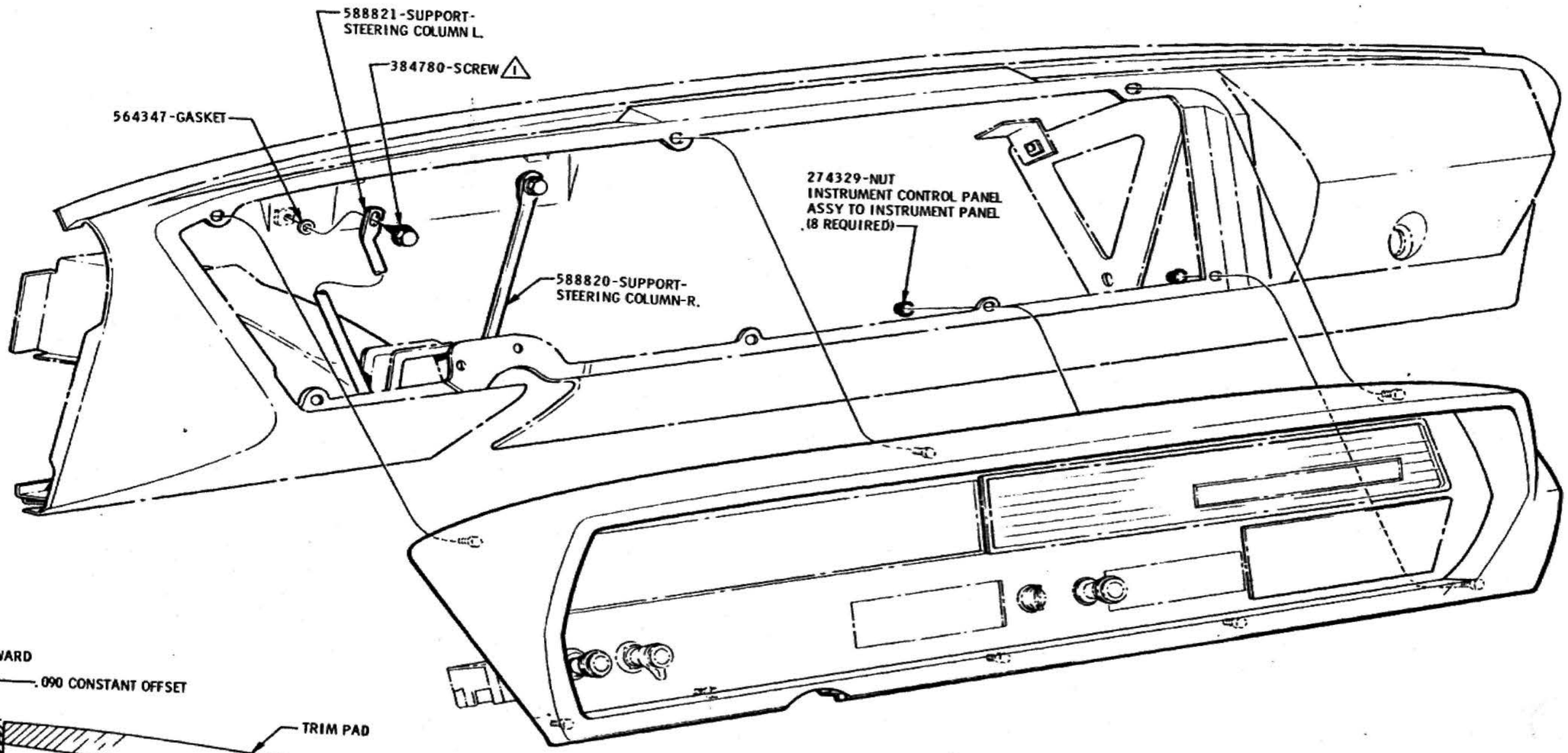

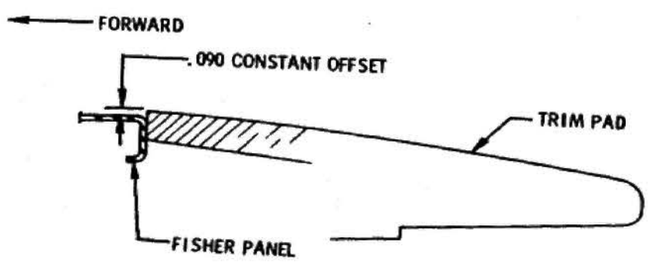

TYPICAL SECTION THRU INSTRUMENT PANEL AND TRIM PAD

CONTROL PANEL ASSY TO INSTRUMENT PANEL

△1 15 - 20 FT. LBS. (A)

DATE	SYM	REVISION	DR.	CK.	DATE	SYM	REVISION	DR.	CK.	DATE	SYM	REVISION	DR.	CK.
										6-16-64	A	TORQUE ADDED	B.B.	VP

INSTALLATION
DATE JAN. 13, 1964
DR. BY C. E. MAY
CHECKED H. VAN PELT
APPR.
APPR.

INSTRUMENT PANEL

FIRST USED 1965 — Oldsmobile GRAPHIC ILLUSTRATION

SERIES F85 — REF. 1A2B

PAGE 1A2B-2.6

PART NO. 387287

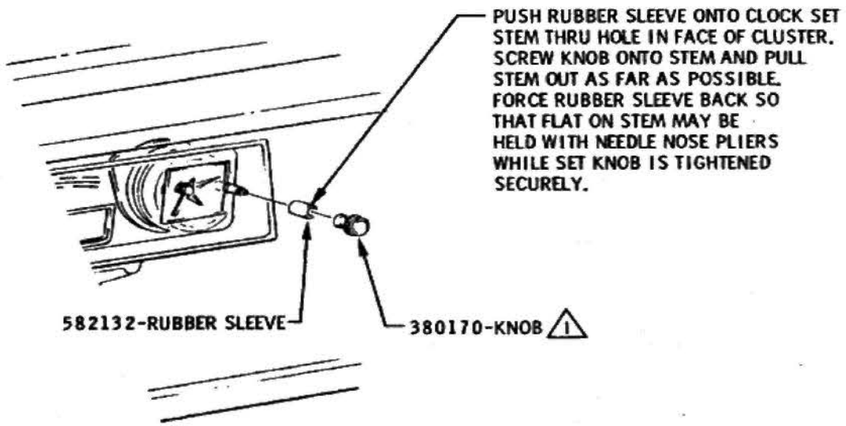

FIG. 4

KNOB & SLEEVE INSTALL.

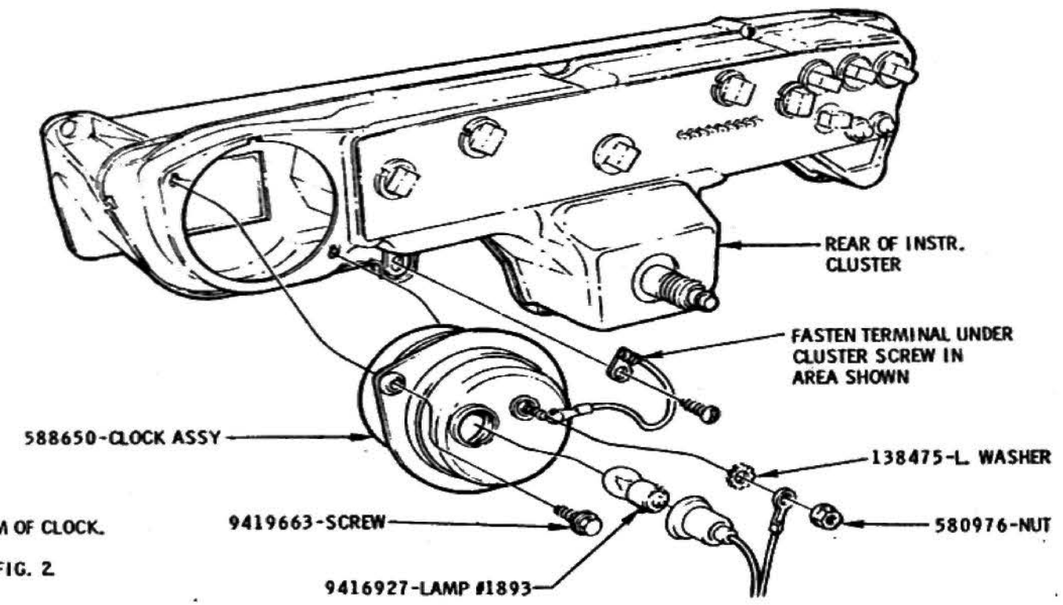

FIG. 2

CLOCK INSTALLATION

INSTALLATION INSTRUCTIONS

1. REMOVE CLOCK SET KNOB AND RUBBER SLEEVE FROM STEM OF CLOCK.
2. INSERT CLOCK INTO CLUSTER AND FASTEN AS SHOWN IN FIG. 2.
3. INSTALL WIRING AS SHOWN IN FIGURES 1 & 2.
4. INSTALL RUBBER SLEEVE AND KNOB AS SHOWN IN FIG. 4.
5. SET CLOCK AND CHECK FOR PROPER OPERATION.

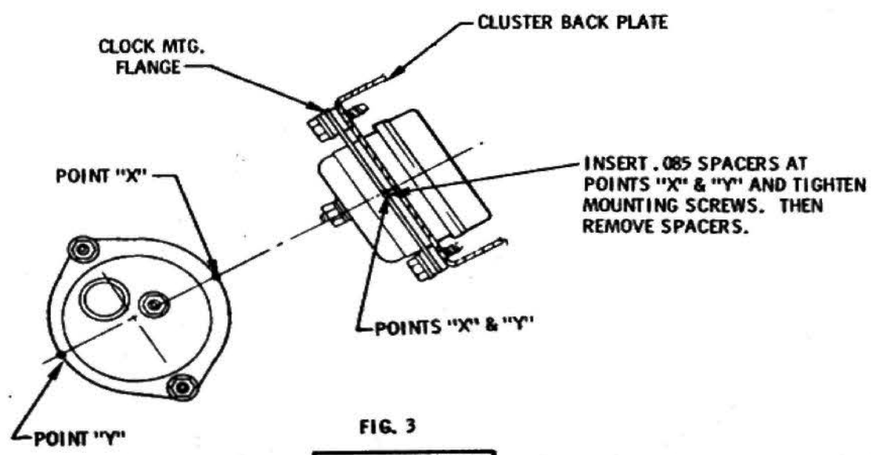

FIG. 3

CLOCK MOUNTING ADJUSTMENT

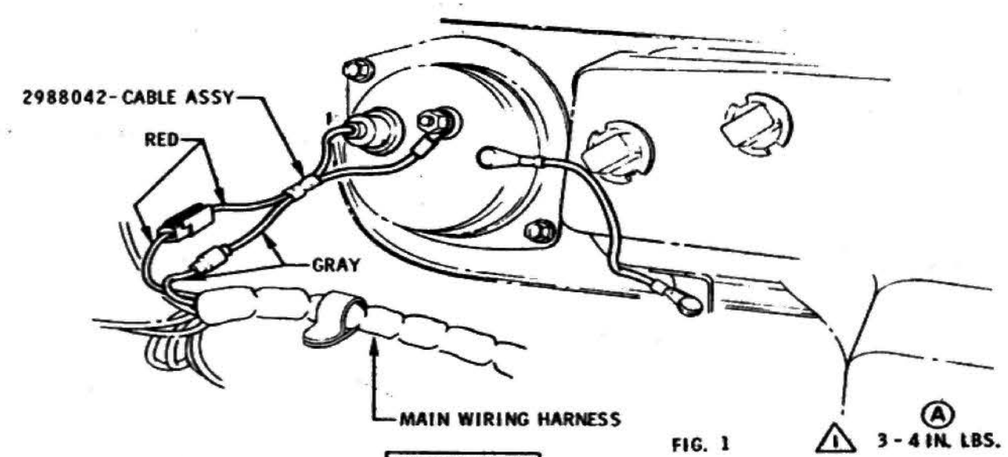

FIG. 1

JUMPER CABLE INSTALLATION

DATE	SYM	REVISION	DR.	CK.	DATE	SYM	REVISION	DR.	CK.	DATE	SYM	REVISION	DR.	CK.
										6-16-64	A	TORQUE ADDED	B.R.	VP

INSTALLATION	ELECTRIC CLOCK		
DATE JAN. 23, 1964	FIRST USED 1965	Oldsmobile GRAPHIC ILLUSTRATION	PAGE 1A2B-3.1
DR. BY C.E. MAY			
CHECKED H VAN PELT	SERIES F-85	REF. 95U95	PART NO. 387570
APPR.			
APPR.			

OLDSMOBILE DIVISION
GENERAL MOTORS CORPORATION
LANSING, MICHIGAN

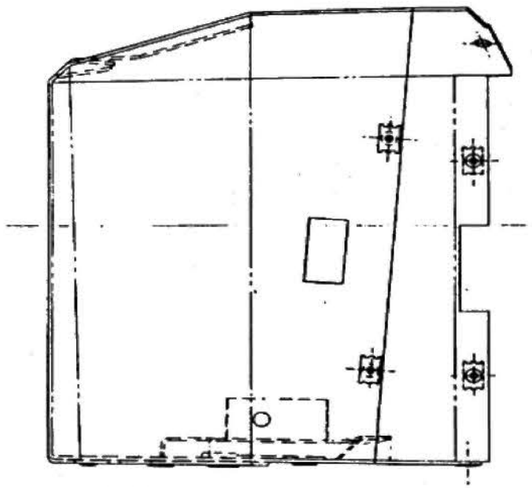

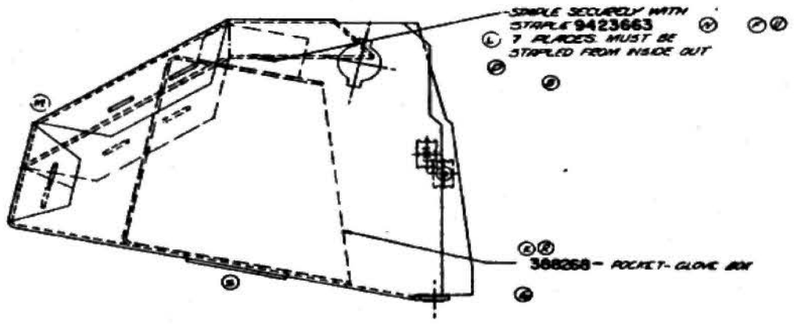

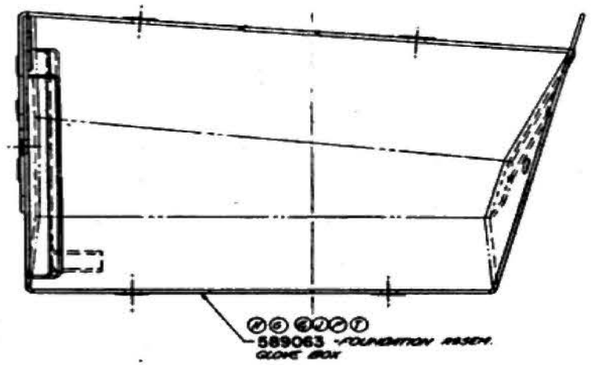

589062

589062

DO NOT SCALE

BOX ASSEMBLY - GLOVE

PART 8

589062

SAMPLE TO BE APPROVED BY PRODUCT ENGRG DEPT

IA2B-41

1965-F85

HEATER

DRAWING NO.	DRAWING NAME	PAGE NO.
386488	HEATER	1A2C - 2.1

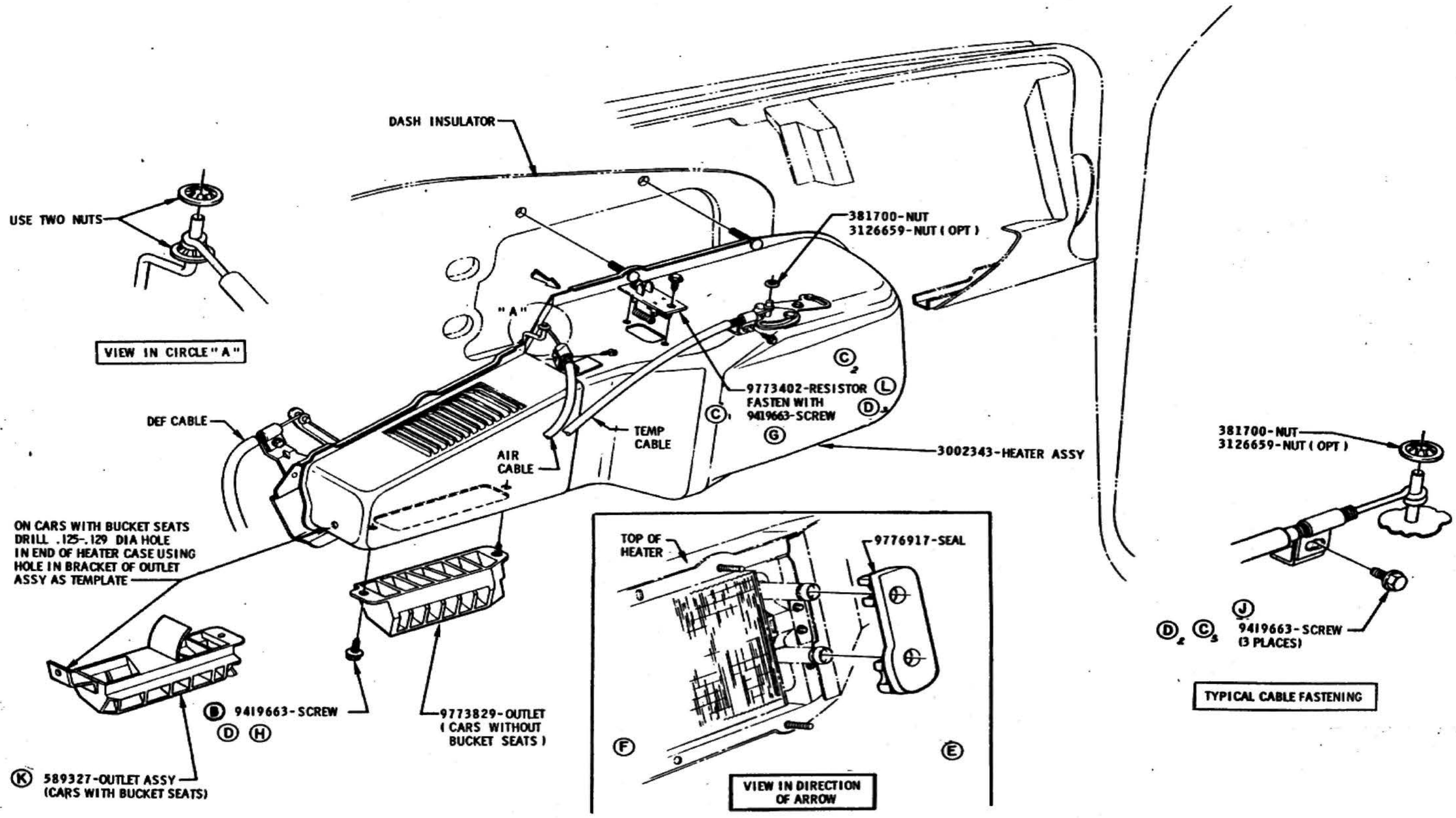

DATE	SYM	REVISION	DR.	CK.	DATE	SYM	REVISION	DR.	CK.	DATE	SYM	REVISION	DR.	CK.
					8-18-64	K	NOTE REVISED	BP	VP	2-21-64	E	386284-SHIELD REMOVED	BP	VP
					5-28-64	J	WAS 3833221 SCREW		VP	1-23-64	D3	WAS 9419663 SCREW		VP
					5-28-64	H	WAS 9419303 SCREW		VP	1-14-64	C3	SCREW NOS. REVISED	BP	VP
					3-11-64	G	WAS 9419303 SCREW	TJ	VP	1-4-64	B	WAS 9419303 SCREW		VP
9-9-64	L	WAS 588906-RESISTOR	BP	VP	2-21-64	F	VIEW ADDED		VP	12-11-63	A	NOTE REVISED	BP	VP

INSTALLATION **HEATER**

DATE NOV. 12, 1963
DR. BY G. KESTER
CHECKED H. VAN PELT
APPR.
APPR.

FIRST USED 1965 — Oldsmobile Graphic Illustration

SERIES F-85 — REF. 1A2C

PAGE 1A2C-2.1

PART NO. 386488

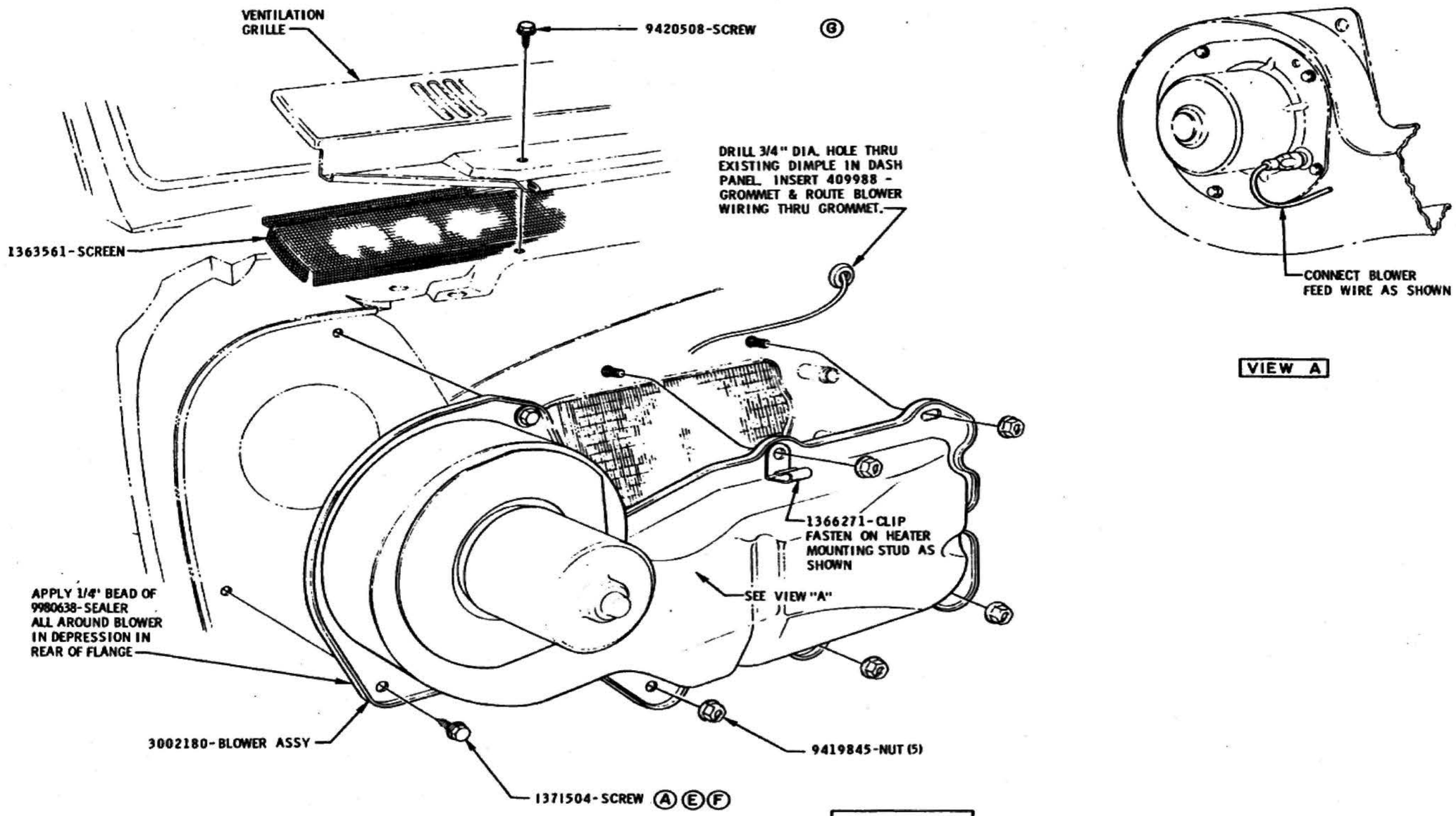

AIR INLET BLOWER INSTALLATION

DATE	SYM	REVISION	DR.	CK.	DATE	SYM	REVISION	DR.	CK.	DATE	SYM	REVISION	DR.	CK.
										6-5-64	E	WAS 9419727 SCREW	BB	VD
										5-22-64	D	9419845 WAS 9419844		
										3-19-64	C	SEALER INFO. ADDED		VD
					10-16-64	G	GRILLE SCREW NOTE REV.	BC	VD	2-21-64	B	SEALER NOTE REMOVED	CB	VD
					6-19-64	F	WAS 1370504 SCREW	BB	VD	1-4-64	A	WAS 1363920 SCREW	BP	D.T.

INSTALLATION — HEATER

DATE NOV. 12, 1963
DR. BY G. KESTER
CHECKED H. VAN PELT
APPR.
APPR.

FIRST USED 1965 — Oldsmobile GRAPHIC ILLUSTRATION — PAGE IA2C-2.2

SERIES F-85 — REF. 1A2C — PART NO. 386488

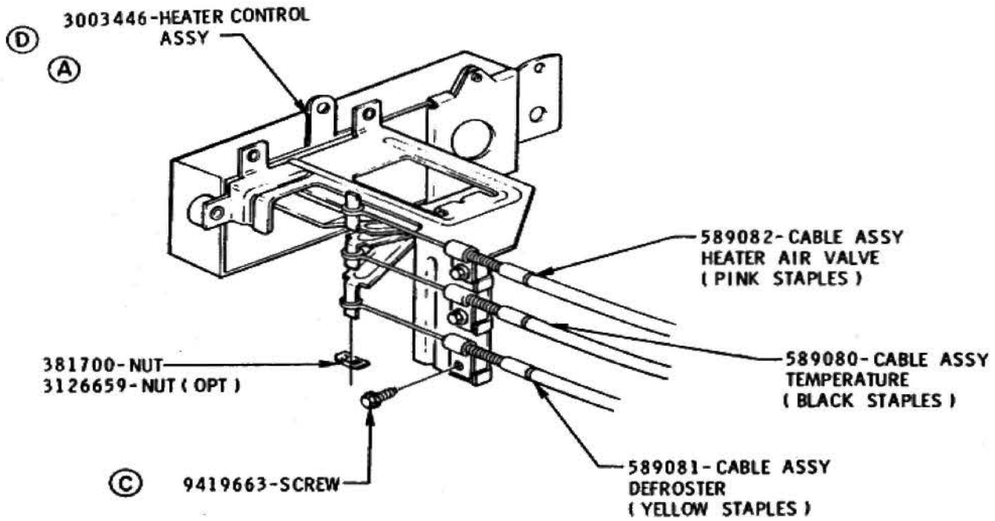

CABLE FASTENING TO HEATER CONTROL

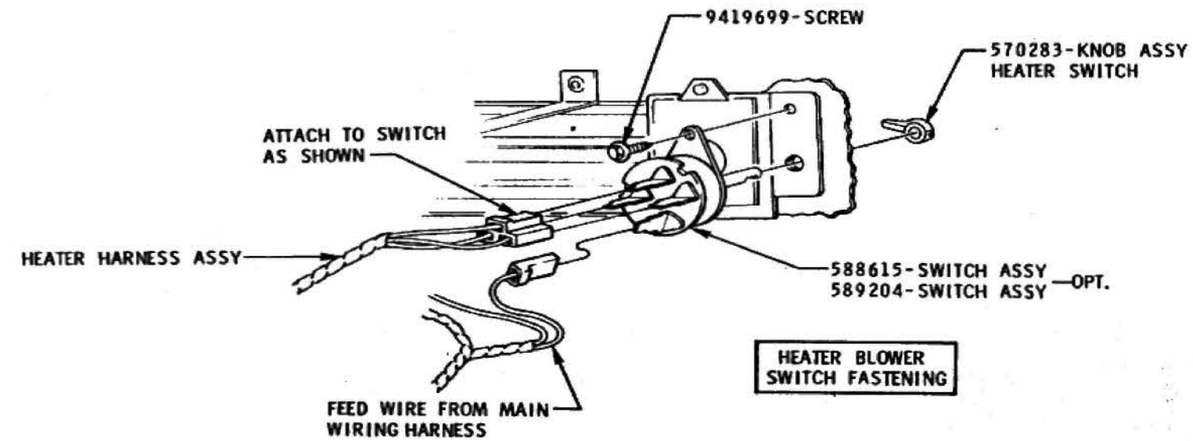

HEATER BLOWER SWITCH FASTENING

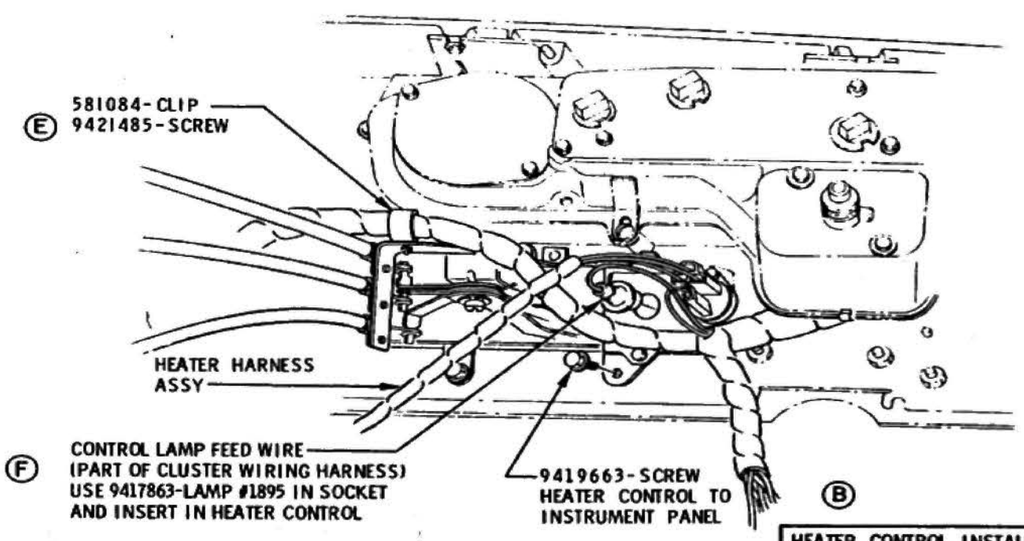

HEATER CONTROL INSTALLATION TO INSTRUMENT PANEL

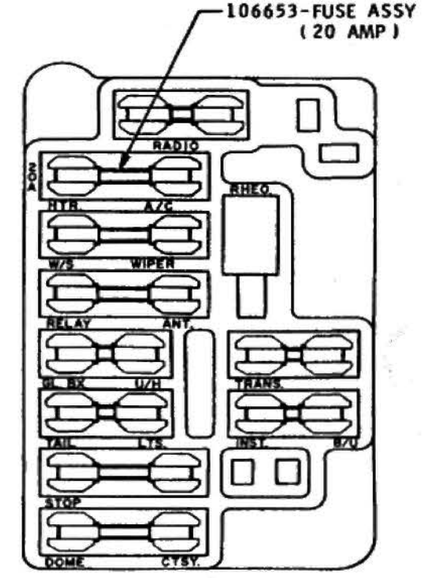

FUSE INSTALLATION

DATE	SYM	REVISION	DR.	CK.	DATE	SYM	REVISION	DR.	CK.	DATE	SYM	REVISION	DR.	CK.
										1-23-64	E	WAS 9419303 SCREW	GL	VP
										1-14-64	D	WAS 3002865 CONT. ASSY	BP	VP
										1-14-64	C	WAS 3833221-SCREW	BA	VP
										1-4-64	B	VIEW & PART NO'S ADDED	GL	D.X
					3-6-64	F	WAS 127934 LAMP #57	BB	VP	1-4-64	A	PART NO. ADDED	BP	D.X

INSTALLATION — DATE NOV. 12, 1963 — DR. BY G. KESTER — CHECKED H. VAN PELT — APPR. — APPR.

HEATER

FIRST USED 1965 — Oldsmobile GRAPHIC ILLUSTRATION — SERIES F-85 — REF. 1A2C — PAGE 1A2C-2.3 — PART NO. 386488

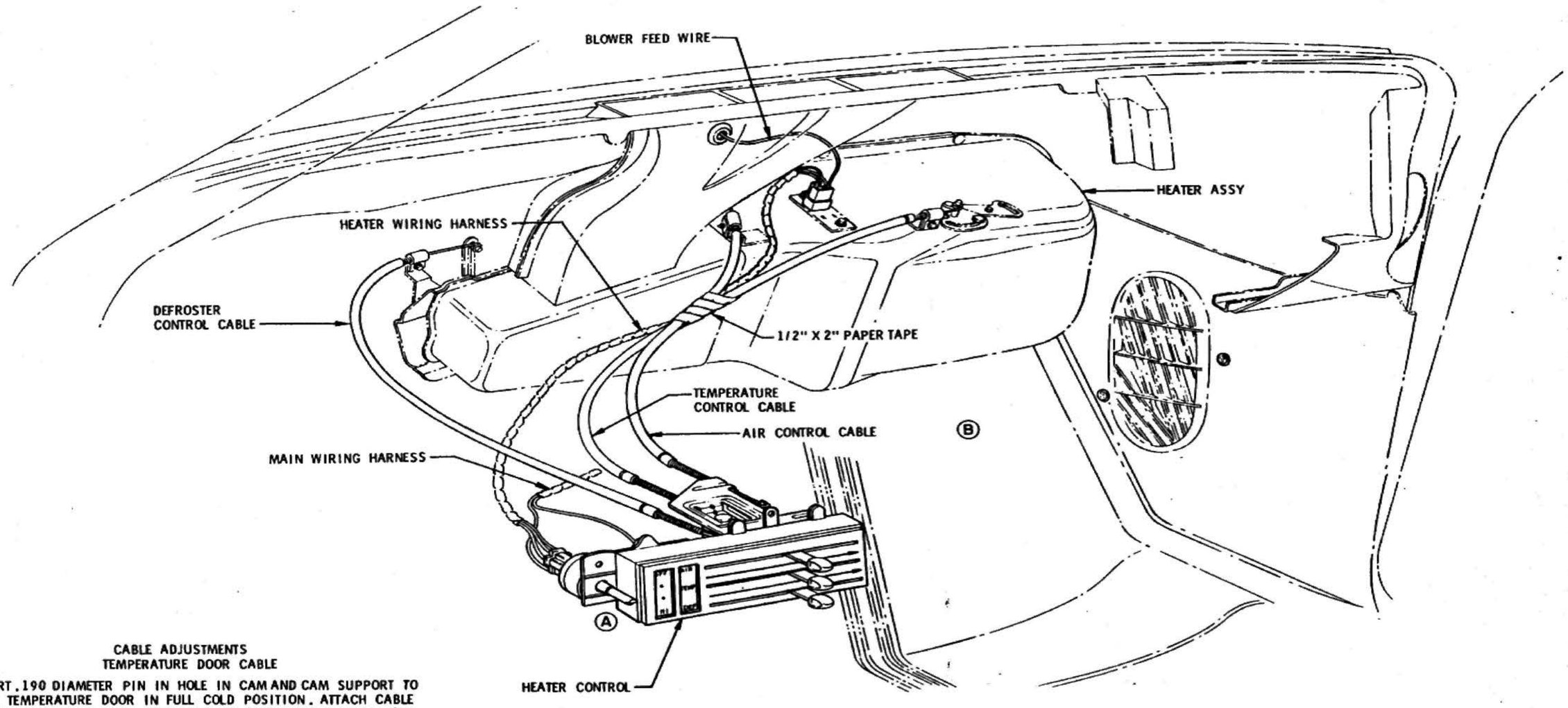

CABLE ADJUSTMENTS
TEMPERATURE DOOR CABLE

INSERT .190 DIAMETER PIN IN HOLE IN CAM AND CAM SUPPORT TO LOCK TEMPERATURE DOOR IN FULL COLD POSITION. ATTACH CABLE TO PIN ON CAM AND SET TEMPERATURE LEVER WITH .060, TO .120 CLEARANCE TO LEFT END OF SLOT. TIGHTEN CABLE ATTACHING SCREW.

DEFROSTER DOOR AND OUTSIDE DOOR CABLES

ADJUST CABLES TO GET .060 TO .120 SPRING BACK AT LEFT END OF SLOT

CABLE AND WIRE ROUTING UNDER INSTRUMENT PANEL

DATE	SYM	REVISION	DR.	CK.	DATE	SYM	REVISION	DR.	CK.	DATE	SYM	REVISION	DR.	CK.
										4-4-64	B	1720885 SCREW REMOVED	CB	VP
										1-30-64	A	CONTROL REVISED	CB	VP

INSTALLATION	HEATER		
DATE NOV. 12, 1963	FIRST USED 1965	Oldsmobile GRAPHIC ILLUSTRATION	PAGE 1A2C-2.4
DR. BY G. KESTER			
CHECKED H. VAN PELT	SERIES F-85	REF. 1A2C	PART NO. 386488
APPR.			
APPR.			

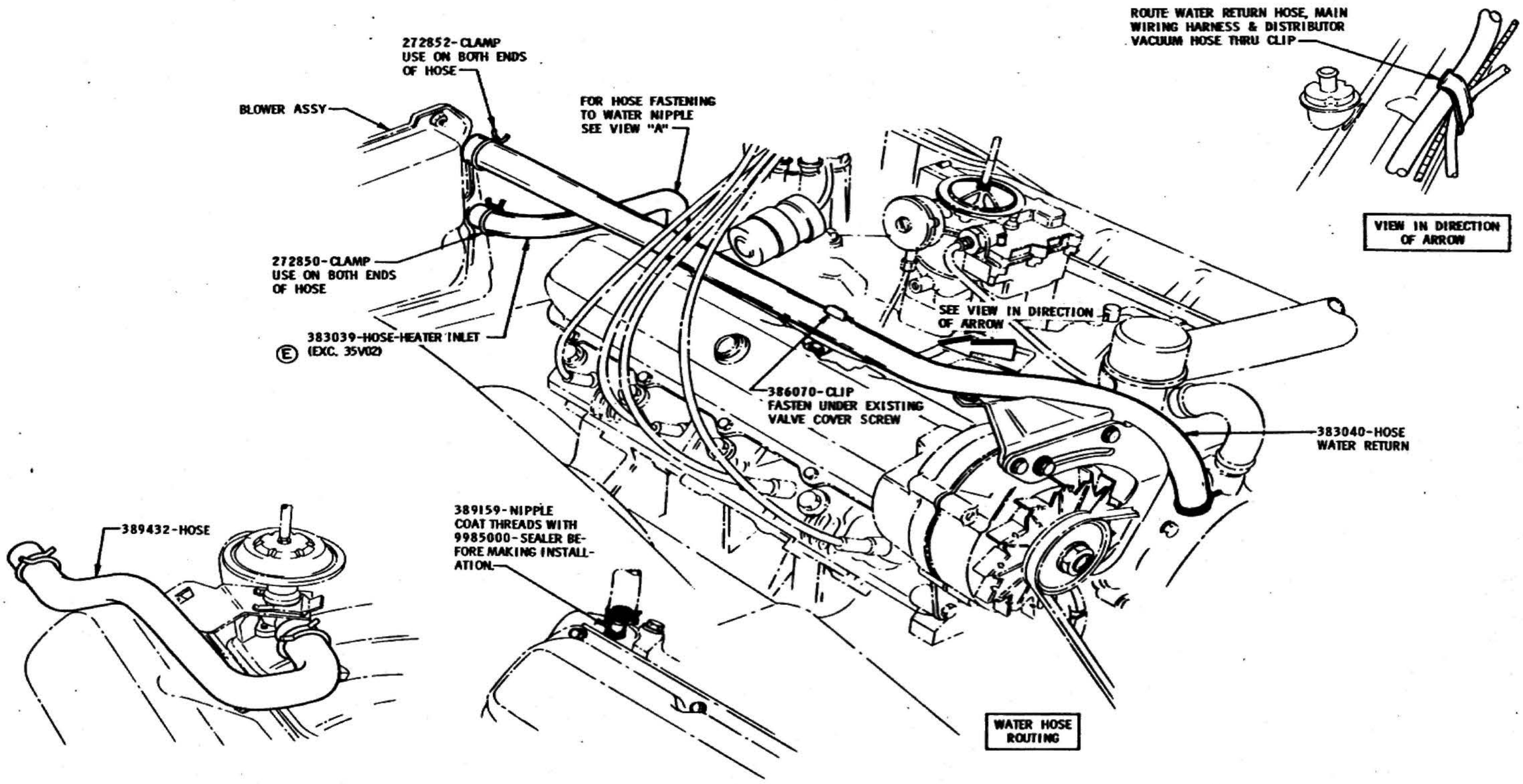

DATE	SYM	REVISION	DR.	CK.	DATE	SYM	REVISION	DR.	CK.	DATE	SYM	REVISION	DR.	CK.
										9-2-64	E	35V02 WAS 35W29		VP
										8-19-64	D	NOTE REVISED		VP
										5-22-64	C	WAS 388598 NIPPLE		VP
										4-16-64	B	WAS 383099-NIPPLE		VP
					11-13-64	F	VIEW "B" ADDED		VP	3-9-64	A	WAS 1356096 NIPPLE		VP

INSTALLATION	HEATER		
DATE NOV. 12, 1963	FIRST USED 1965	Oldsmobile GRAPHIC ILLUSTRATION	PAGE IA2C-2.5
DR. BY G. KESTER			
CHECKED H. VAN PELT			
APPR.	SERIES F-85	REF. IA2C	PART NO. 386488
APPR.			

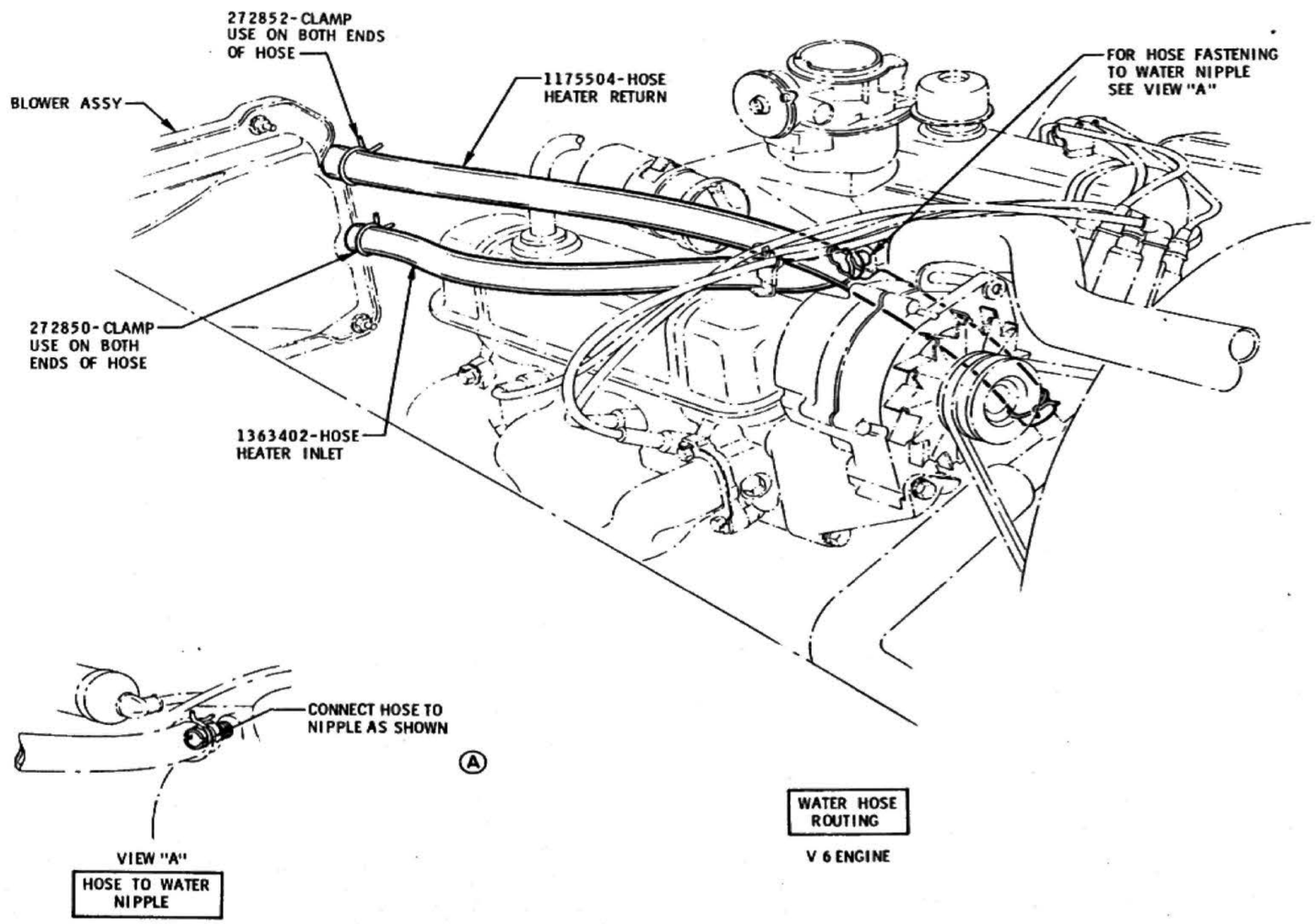

DATE	SYM	REVISION	DR.	CK.	DATE	SYM	REVISION	DR.	CK.	DATE	SYM	REVISION	DR.	CK.
										3-6-64	A	DEALER NOTE REMOVED	PB	VP

INSTALLATION	HEATER		
DATE NOV. 12, 1963	FIRST USED 1965	Oldsmobile GRAPHIC ILLUSTRATION	PAGE 1A2C-2.6
DR. BY G. KESTER			
CHECKED H. VAN PELT	SERIES F-85	REF. 1A2C	PART NO. 386488
APPR.			
APPR.			

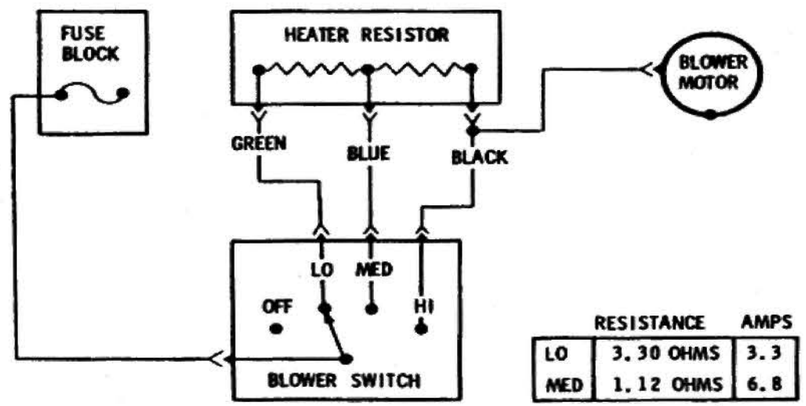

	RESISTANCE	AMPS
LO	3.30 OHMS	3.3
MED	1.12 OHMS	6.8

SCHEMATIC WIRING DIAGRAM

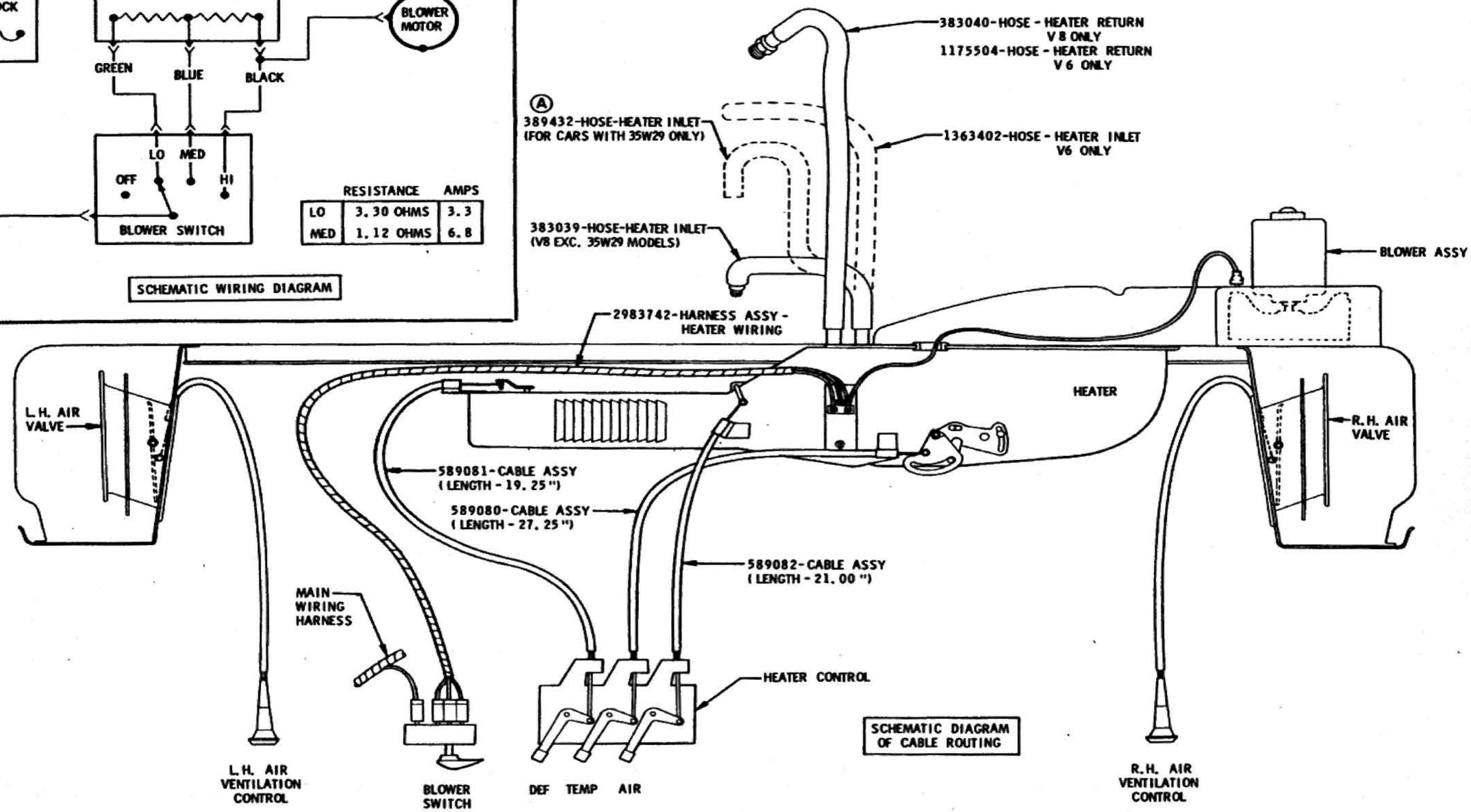

SCHEMATIC DIAGRAM OF CABLE ROUTING

DATE	SYM	REVISION	DR.	CK.	DATE	SYM	REVISION	DR.	CK.	DATE	SYM	REVISION	DR.	CK.
										8-19-64	A	NOTE ADDED	AG	VP

INSTALLATION	HEATER		
DATE NOV. 12, 1963	FIRST USED 1965	Oldsmobile GRAPHIC ILLUSTRATION	PAGE IA2C-2.7
DR. BY G. KESTEE			
CHECKED H. VAN PELT			
APPR. —	SERIES F-85	REF. 1A2C	PART NO. 386488
APPR.			

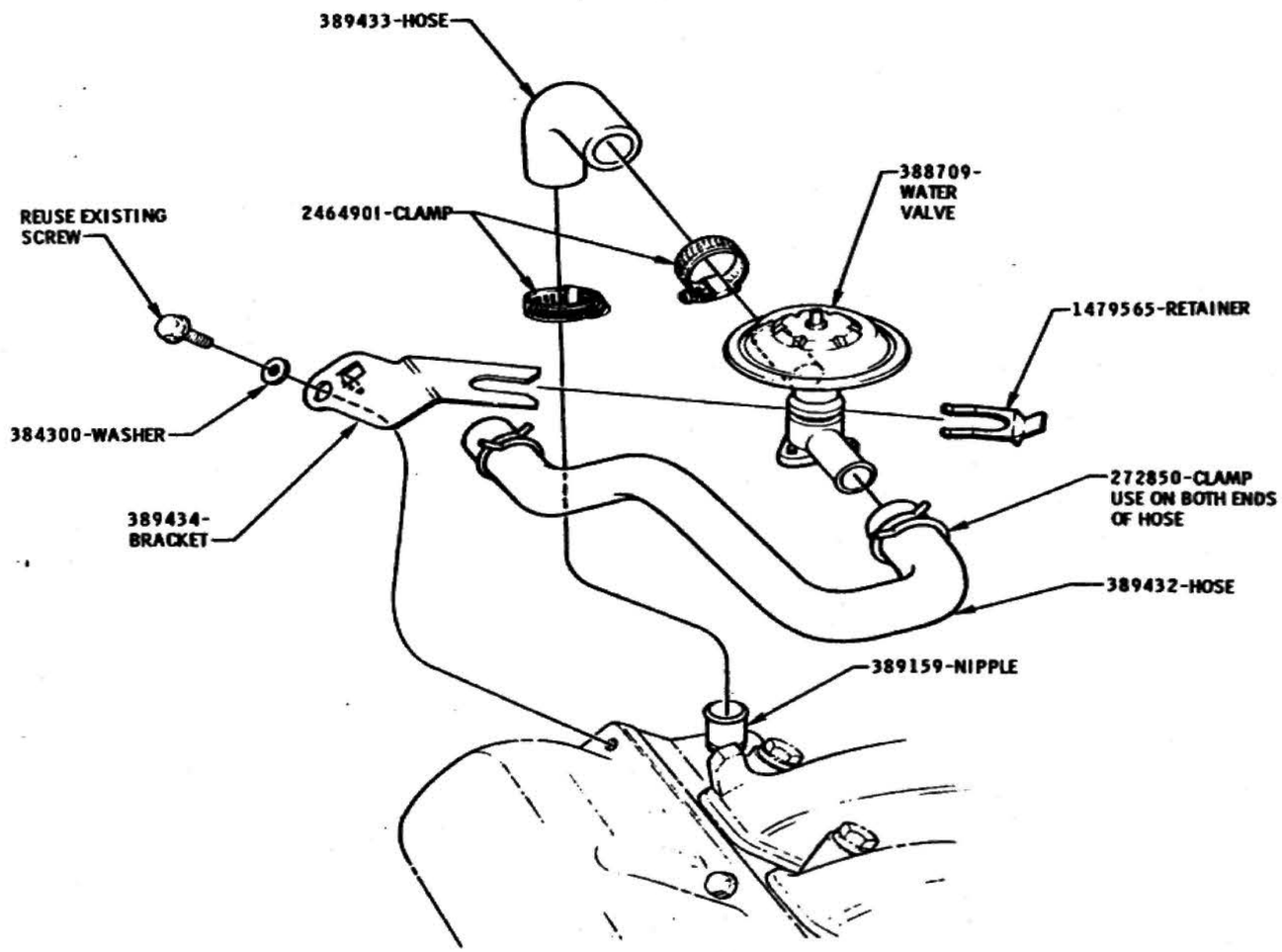

WATER VALVE INSTALLATION

Ⓐ FOR CARS WITH 35V02 EQUIPMENT

DATE	SYM	REVISION	DR.	CK.	DATE	SYM	REVISION	DR.	CK.	DATE	SYM	REVISION	DR.	CK.
										8-31-64	A	35V02 WAS 35W29	Pp	VP

INSTALLATION — HEATER

DATE AUG. 19, 1964
DR. BY J. V. GALL
CHECKED H. VAN PELT
APPR.
APPR.

FIRST USED 1965

Oldsmobile GRAPHIC ILLUSTRATION

SERIES F-85

REF.

PAGE IA2C-2.8

PART NO. 386488

WINDSHIELD WIPERS

DRAWING NO.	DRAWING NAME	PAGE NO.
386344	WINDSHIELD WIPER	1A2D - 2.1
386765	WINDSHIELD WIPER & WASHER	1A2D - 3.1
387568	WASHER SOLVENT BOTTLE	1A2D - 4.1

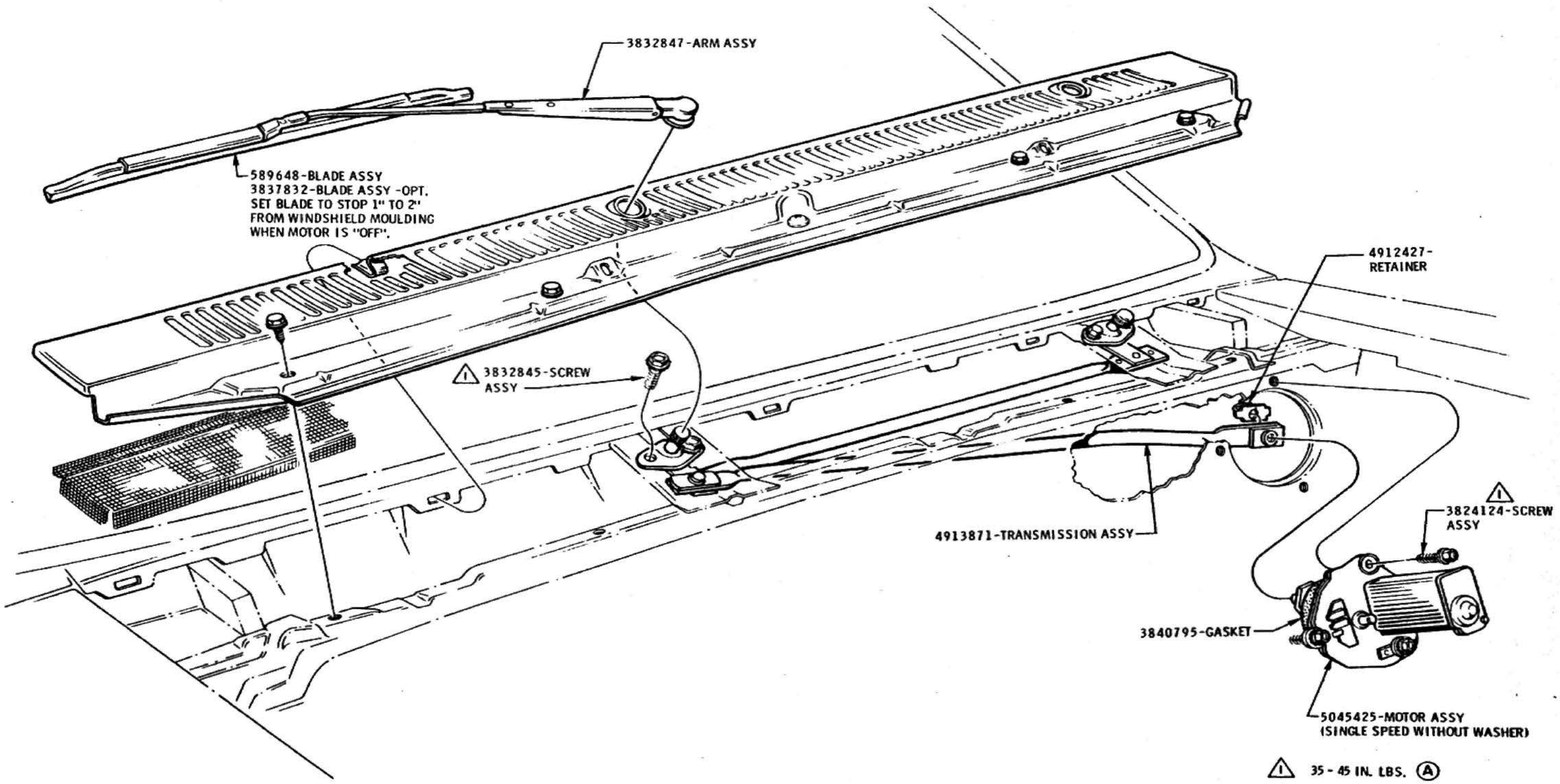

DATE	SYM	REVISION	DR.	CK.	DATE	SYM	REVISION	DR.	CK.	DATE	SYM	REVISION	DR.	CK.
										6-12-64	A	TORQUE ADDED	BB	VP

INSTALLATION	WINDSHIELD WIPER		2 SHEETS
DATE NOV. 6, 1963	FIRST USED 1965	Oldsmobile GRAPHIC ILLUSTRATION	PAGE IA2D-2.1
DR. BY F. BEAUDOIN			
CHECKED H. VAN PELT	SERIES F 85	REF. IA 2D	PART NO. 386344
APPR.			
APPR.			

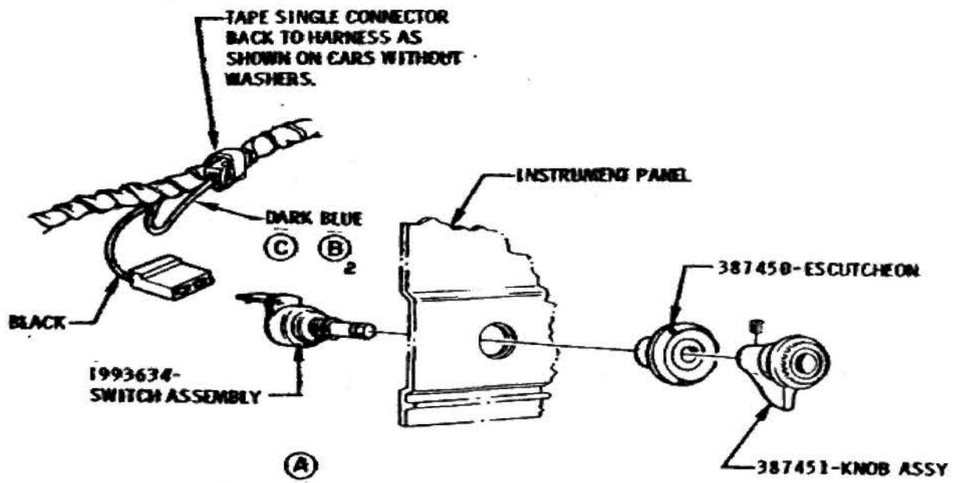

A

CONTROL AND SWITCH INSTALLATION

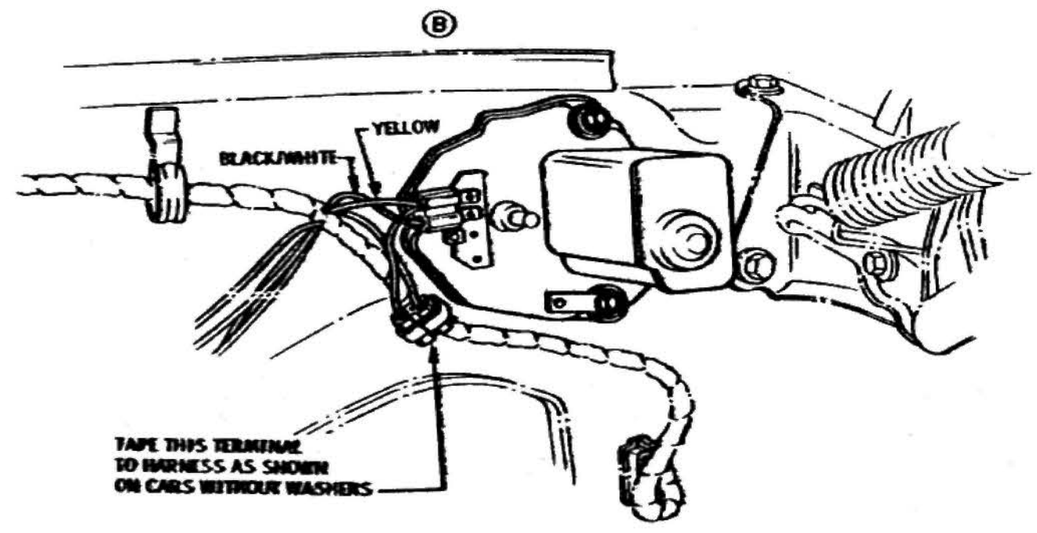

MOTOR WIRING

TO COMPLETE WINDSHIELD WASHER INSTALLATION SEE DRAWING 384300

DATE	SYM	REVISION	DR.	CK.	DATE	SYM	REVISION	DR.	CK.	DATE	SYM	REVISION	DR.	CK.
										6-26-64	C	CONNECTORS REVERSED	JP	VP
										5-7-64	B2	COLOR CODING REVISED	BP	VP
										1-14-64	A	REVISED & REDRAWN	OV	VP

INSTALLATION
DATE NOV. 6, 1963
DR. BY F. BEAUDOIN
CHECKED H. VAN PELT
APPR.
APPR.

WINDSHIELD WIPER

FIRST USED 1965

Oldsmobile Graphic Illustration

SERIES F 85

REF. IA2D

SHEET IA2D-2.2

DRAWING NO. 386344

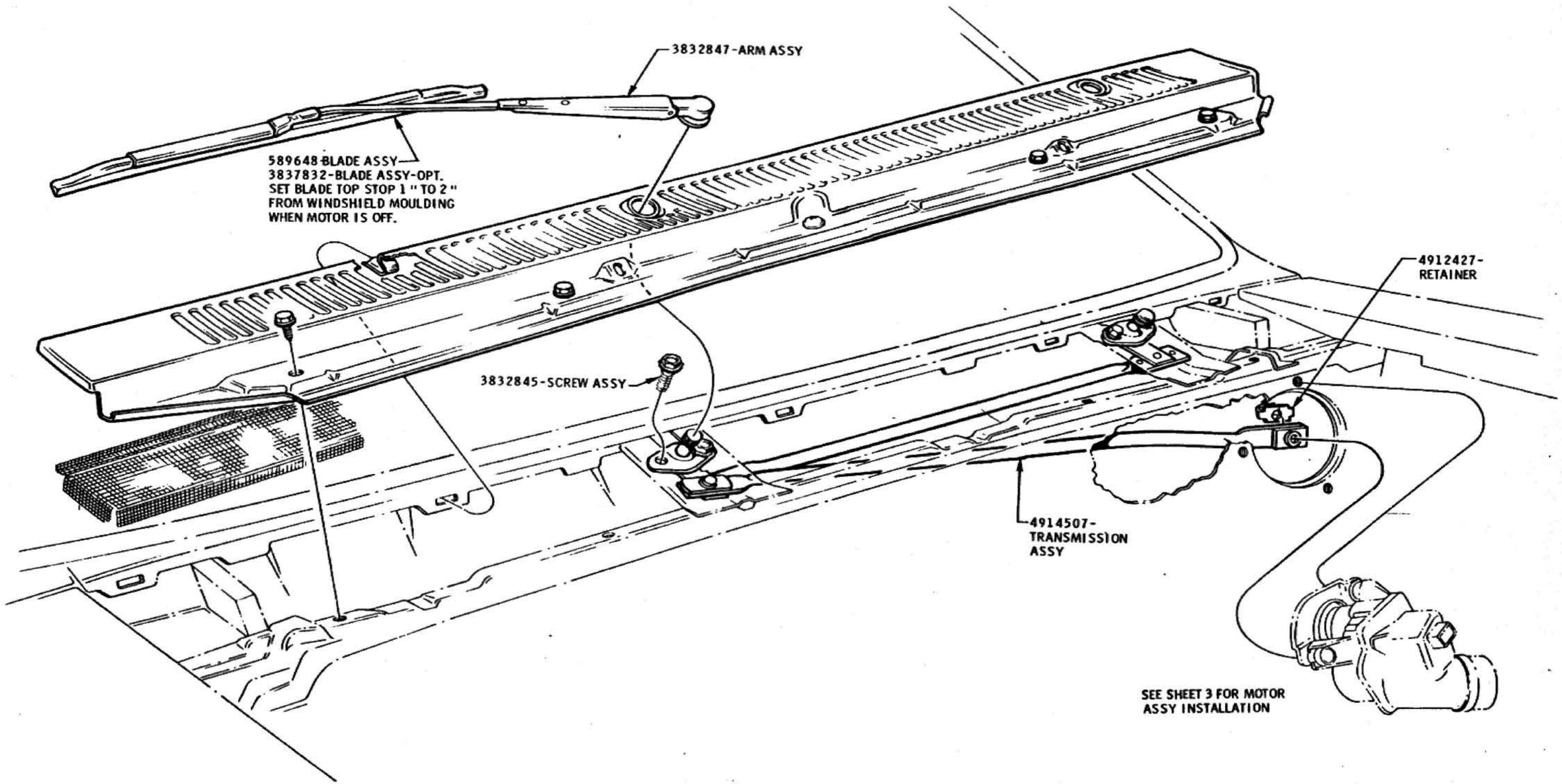

DATE	SYM	REVISION	DR.	CK.	DATE	SYM	REVISION	DR.	CK.	DATE	SYM	REVISION	DR.	CK.

INSTALLATION — **WINDSHIELD WIPER & WASHER** — 3 SHEETS

DATE NOV. 20, 1963
DR. BY BEAUDOIN-PARKER
CHECKED H. VAN PELT
APPR.
APPR.

FIRST USED 1965 — Oldsmobile GRAPHIC ILLUSTRATION — PAGE 1A2D-3.1

SERIES F 85 — REF. 38C-14 1A2D — PART NO. 386765

OLDSMOBILE DIVISION GENERAL MOTORS CORPORATION LANSING 21, MICHIGAN

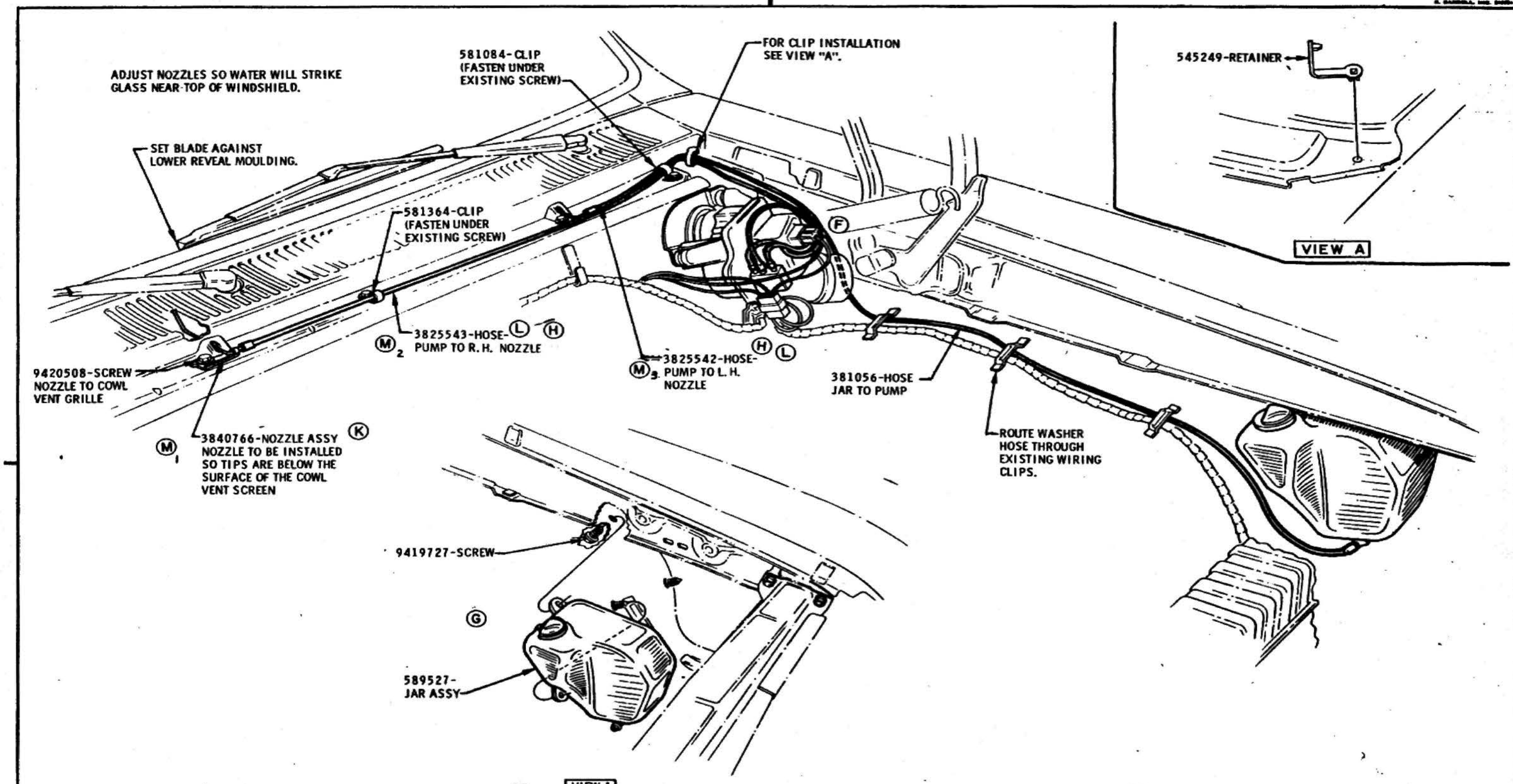

DATE	SYM	REVISION	DR.	CK.	DATE	SYM	REVISION	DR.	CK.	DATE	SYM	REVISION	DR.	CK.
					4-20-65	K	WAS 3840076 NOZZLE	JJ	VP	6-26-64	E	DIMENSIONS REMOVED	EA	VP
					4-20-65	J	VIEW REINSTATED	JJ	VP	4-11-64	D	WAS 1363920	WH	VP
					3-19-65	H2	HOSE NOS REVERSED	DS	VP	3-24-64	C	WAS 589746 HOSE	EA	VP
4-30-65	M3	PART NO'S REINSTATED	WP	VP	3-19-65	G	INSTALL. VIEW REMVD.	DS	VP	2-25-64	B	HOSE ROUTING REVISED	EA	VP
4-20-65	L2	WAS 3825543 HOSES	CG	VP	1-6-65	F	PUMP TO NOZZLE HOSES REROUTED	BP	VP	12-11-63	A	VIEW "B" REVISED	BP	VP

INSTALLATION	WINDSHIELD WIPER & WASHER		
DATE NOV. 20, 1963	FIRST USED 1965	Oldsmobile GRAPHIC ILLUSTRATION	PAGE 1A2D-3.2
DR. BY BEAUDOIN-PARKER			
CHECKED H. VAN PELT	SERIES F 85	REF. 366-14	PART NO. 386765
APPR.			
APPR.			

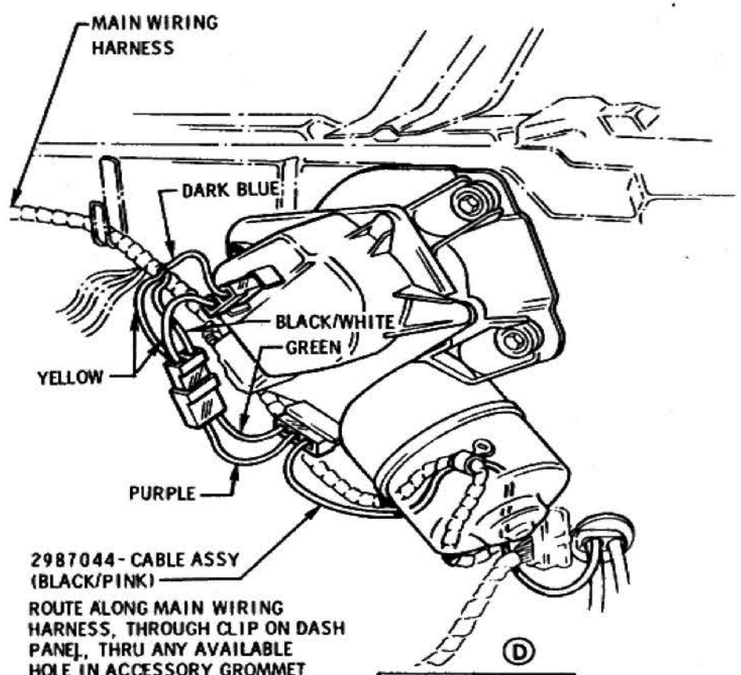

MOTOR WIRING TWO SPEED

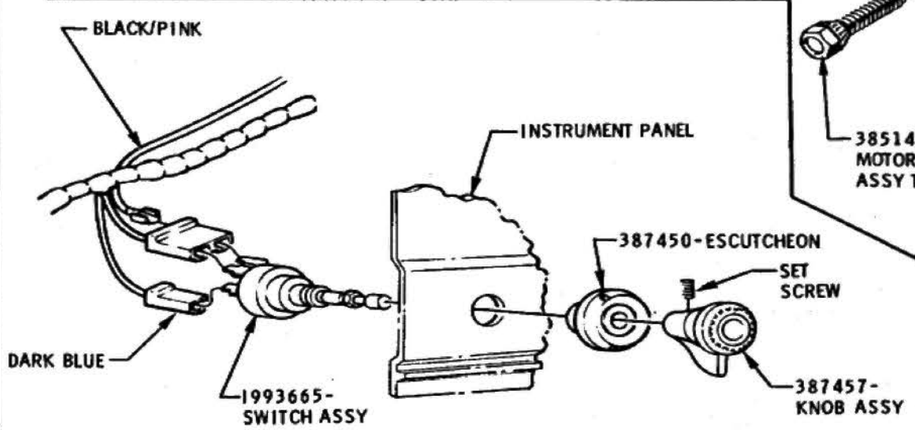

CONTROL INSTALLATION

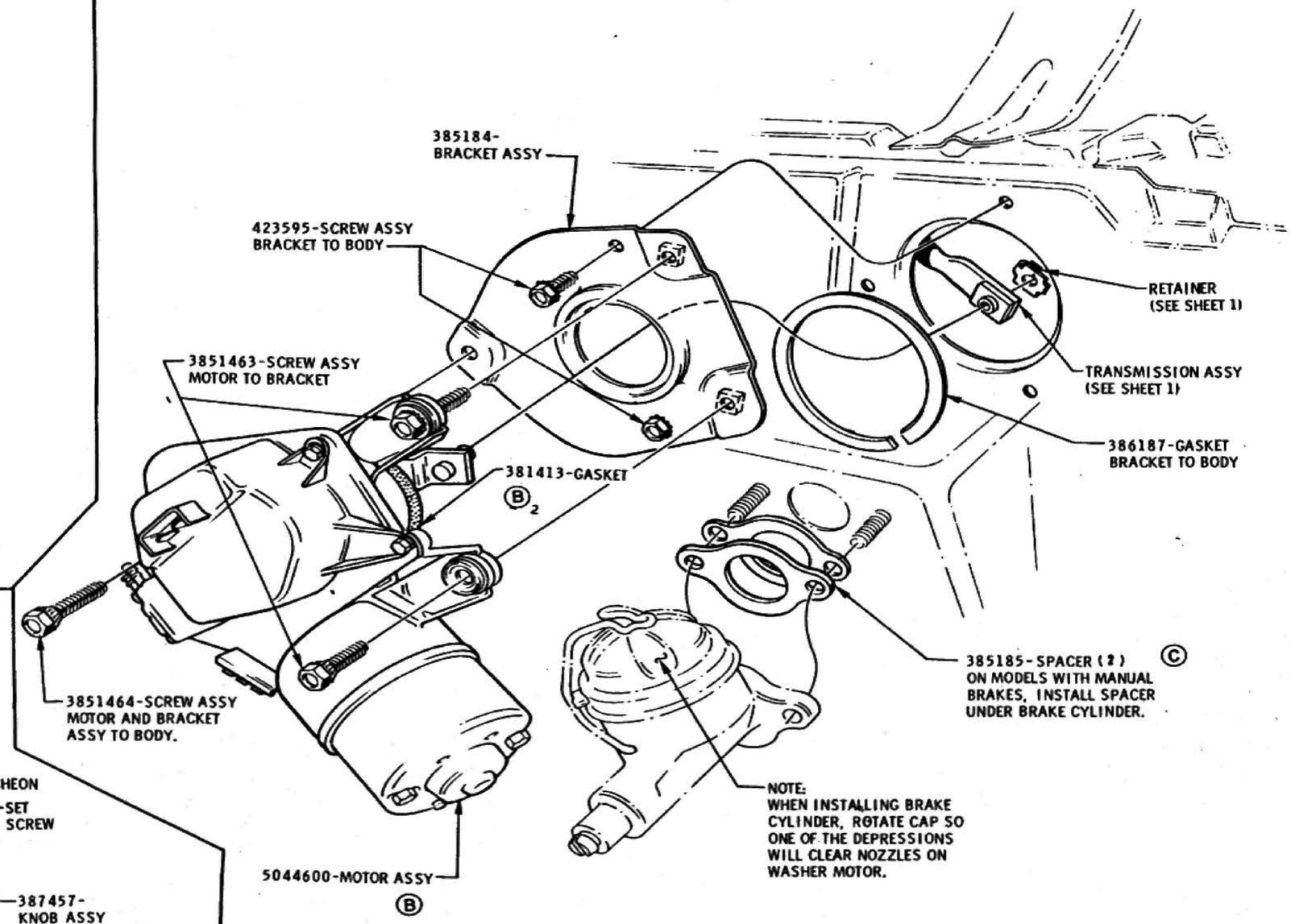

MOTOR INSTALLATION

DATE	SYM	REVISION	DR.	CK.	DATE	SYM	REVISION	DR.	CK.	DATE	SYM	REVISION	DR.	CK.
										5·4·64	D	WIRE COLORS REVISED	DM	VP
										3·19·64	C	SPACER ADDED	RB	VP
										2·17·64	B	PART NUMBERS REVISED	RP	VP
										1·14·64	A	REDRAWN & REVISED	DM	VP

INSTALLATION	WINDSHIELD WIPER & WASHER		
DATE NOV. 20, 1963	FIRST USED 1965	Oldsmobile GRAPHIC ILLUSTRATION	PAGE 1A2D-3.3
DR. BY BEAUDOIN-PARKER			
CHECKED H. VAN PELT	SERIES F 85	REF. 85C-14	PART NO. 386765
APPR.			
APPR.			

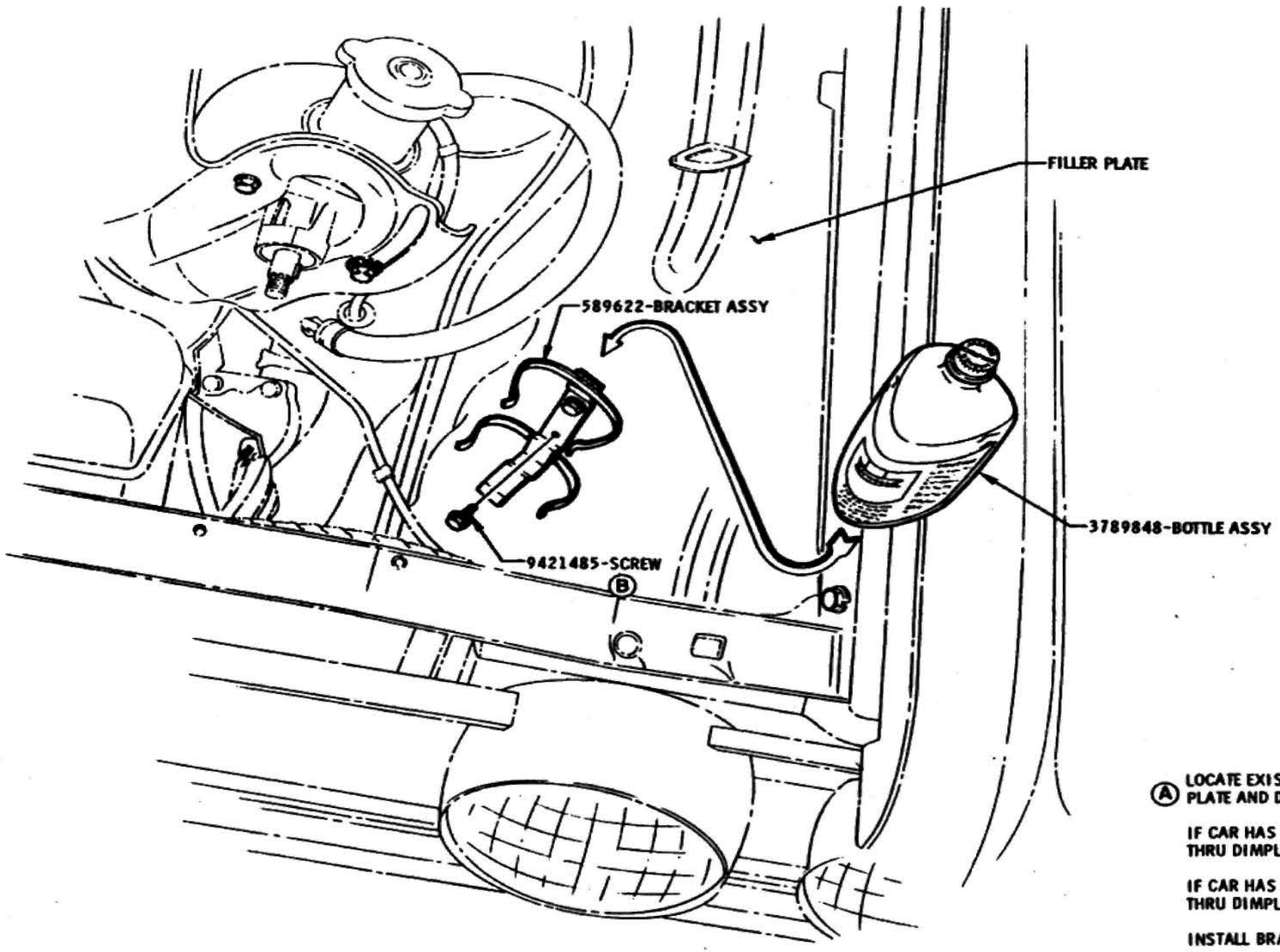

GENERAL INSTRUCTIONS

(A) LOCATE EXISTING DIMPLES ON R.H. OR L.H. FILLER PLATE AND DRILL TWO .125 - .127 DIA. HOLES.

IF CAR HAS BATTERY ON L.H. SIDE, DRILL HOLES THRU DIMPLES IN R.H. FILLER PLATE.

IF CAR HAS BATTERY ON R.H. SIDE, DRILL HOLES THRU DIMPLES IN L.H. FILLER PLATE.

INSTALL BRACKET AND JAR AS SHOWN.

DATE	SYM	REVISION	DR.	CK.	DATE	SYM	REVISION	DR.	CK.	DATE	SYM	REVISION	DR.	CK.
										2-17-65	B	NNS 9419699 SCREW	JC	VP
										1-22-65	A	SCREW HOLE SIZE ADDED	GB	VP

INSTALLATION — **WASHER SOLVENT BOTTLE**

DATE JAN. 20, 1964
DR. BY C. E. MAY
CHECKED H. VAN PELT
APPR.
APPR.

FIRST USED 1965 — Oldsmobile GRAPHIC ILLUSTRATION — PAGE 1A2D-4.1

SERIES F-85 — REF. 55C14 — PART NO. 387568

BODY MOUNTING & FRAME

DRAWING NO.	DRAWING NAME	PAGE NO.
387266	BODY MOUNTING	1B & 2B - 2.1

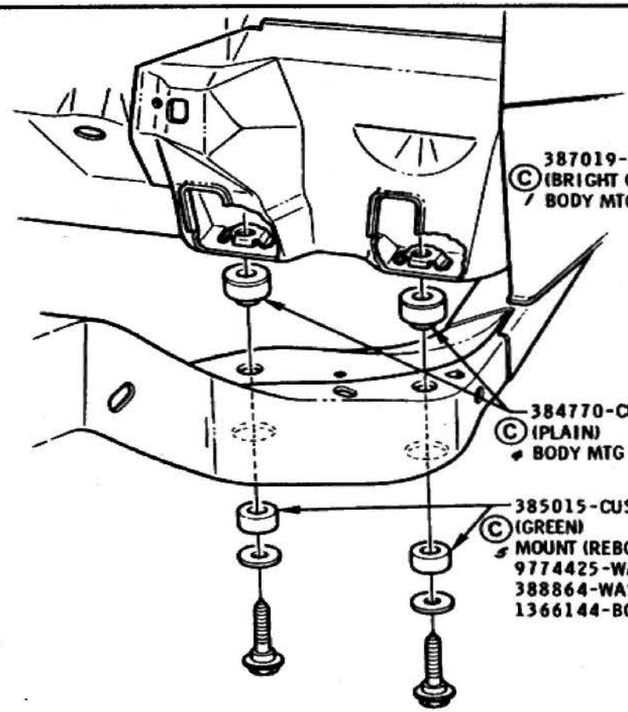

#1 BOLT POSITION

#2 BOLT POSITION

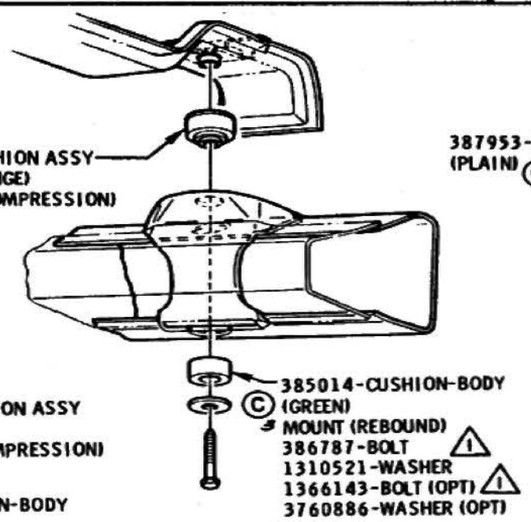

#3 BOLT POSITION (A)1

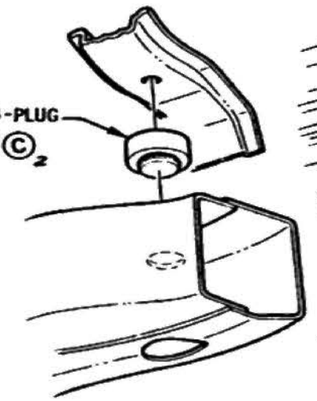

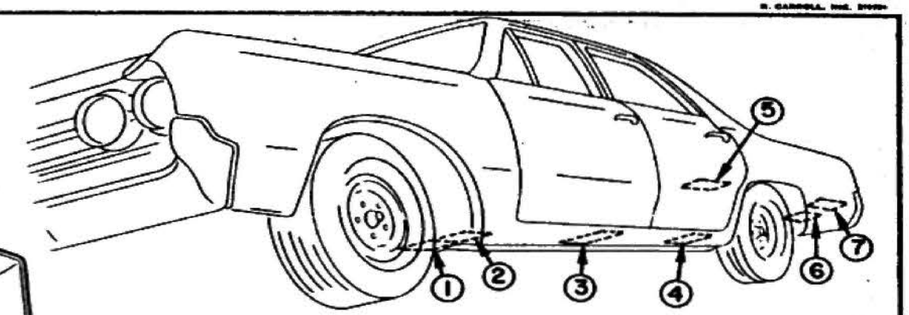

#4 BOLT POSITION (A)2

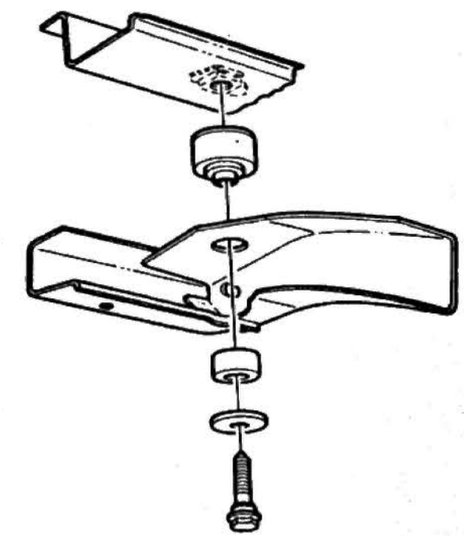

SEE NOTE
#7 BOLT POSITION

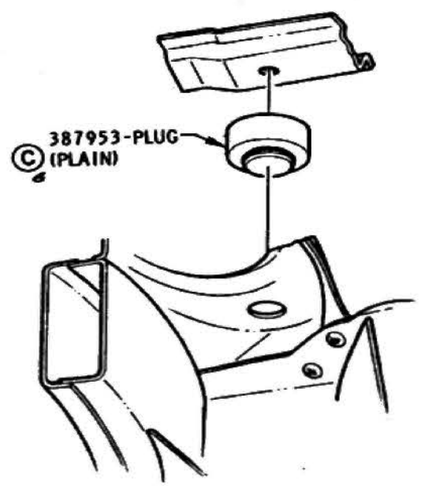

(A)3 #5 BOLT POSITION

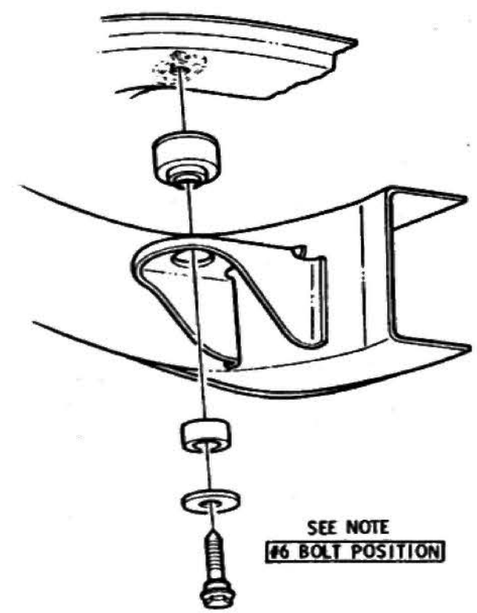

SEE NOTE
#6 BOLT POSITION

(D) (1) 25-35 LBS FT

(E) FRAME USAGE CHART

FRAME ASSY. NO.	CODE	GROUP	USAGE
9780502	PA	2B	3300 & 3500
9780503	PC	2B	3867
		35F35	3 & 27, 69, 3669, 3827, 37
*3864503	PA	2B	3300, 3400, 3500, 3600, 3800 (EXC. EXT. WAGONS & CONVERTIBLES)
382620	GH	2B	EXT. WAGONS

* OPTIONAL TO 9780502

NOTE:
ATTACHING PARTS FOR BOLT POSITIONS #6 & #7 SAME AS SHOWN FOR #1 & #2 BOLT POSITIONS EXCEPT AS SHOWN.

DATE	SYM	REVISION	DR.	CK.	DATE	SYM	REVISION	DR.	CK.	DATE	SYM	REVISION	DR.	CK.
										7-31-64	E	CHART ADDED		
										6-24-64	D	TORQUE SPEC ADDED		
										5-11-64	C6	COLOR CODES ADDED		
										5-11-64	B	388864 ADDED		
										2-19-64	A3	FASTENINGS REVISED.		

INSTALLATION **BODY MOUNTING**

DATE JANUARY 10, 1964
DR. BY D. GUNTHER
CHECKED
APPR.
APPR.

FIRST USED 1965

Oldsmobile GRAPHIC ILLUSTRATION

SERIES F-85

REF.

PAGE IB&2B-2.1

PART NO. 387266

OLDSMOBILE DIVISION GENERAL MOTORS CORPORATION LANSING 21, MICHIGAN

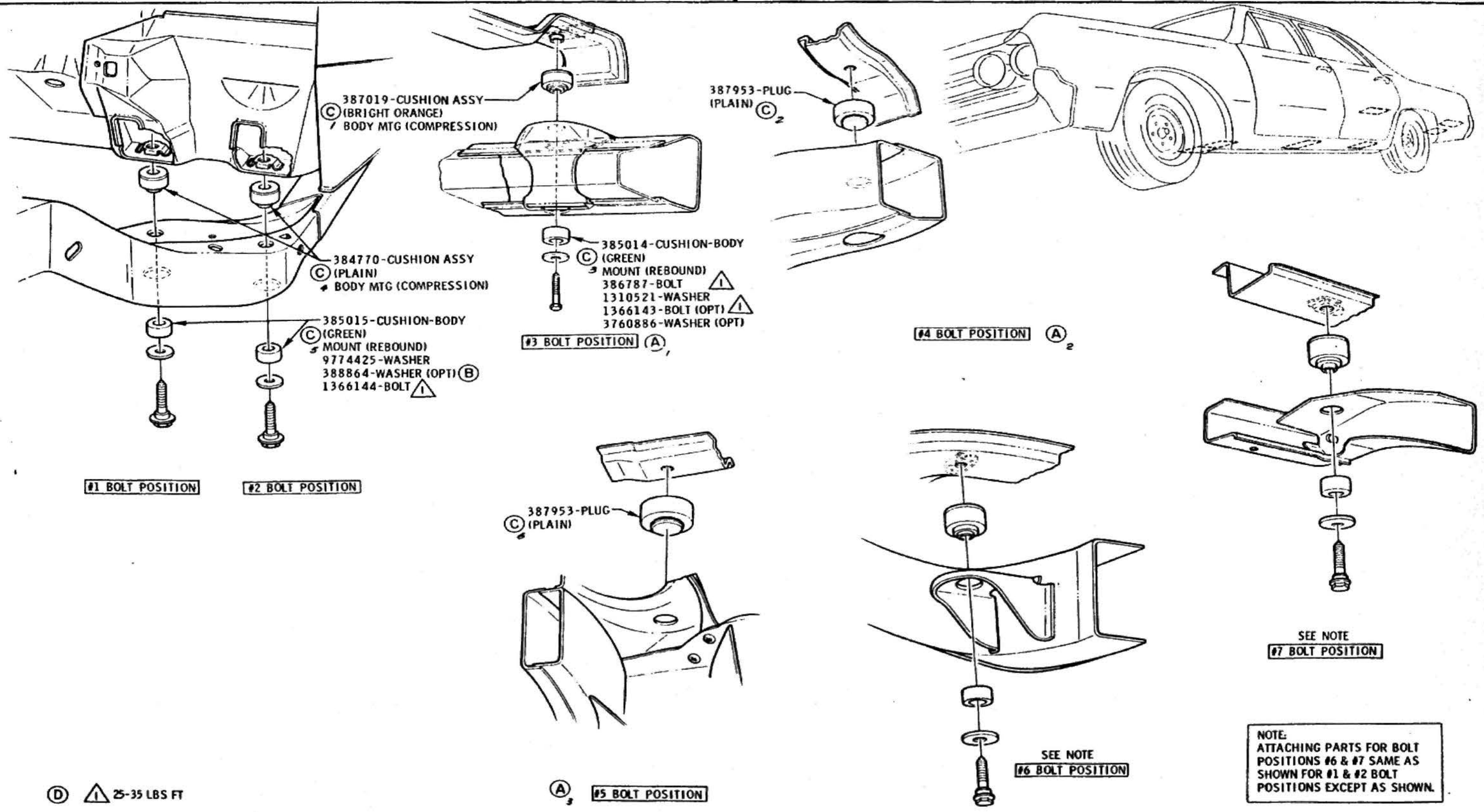

(D) △1 25-35 LBS FT

NOTE:
ATTACHING PARTS FOR BOLT POSITIONS #6 & #7 SAME AS SHOWN FOR #1 & #2 BOLT POSITIONS EXCEPT AS SHOWN.

DATE	SYM	REVISION	DR.	CK.	DATE	SYM	REVISION	DR.	CK.	DATE	SYM	REVISION	DR.	CK.
										6-24-64	D	TORQUE SPEC ADDED	RA	MZ
										5-11-64	C6	COLOR CODES ADDED	WA	MZ
										5-11-64	B	388864 ADDED	WA	MZ
										2-5-64	A3	FASTENINGS REVISED.	JT	MZ

INSTALLATION **BODY MOUNTING**

DATE JANUARY 10, 1964
DR. BY D. GUNTHER
CHECKED
APPR. J. R. Lynch
APPR.

FIRST USED 1965

Oldsmobile GRAPHIC ILLUSTRATION

SERIES F-85

REF.

PAGE IB&2B-2.1

PART NO. 387266

R. CARROLL, INC. 20007-

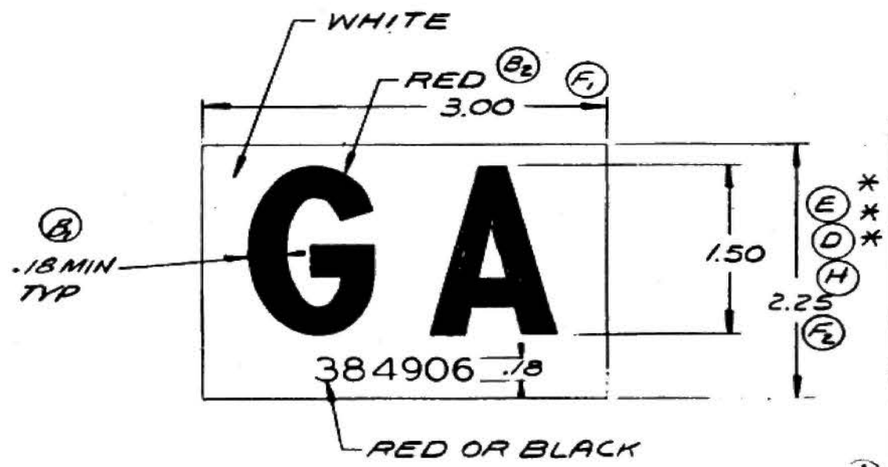

TYPICAL TAPE IDENTIFICATION

A BODIES	
FRAME	CODE
9780502	PA
3864503	PA
9780503	PC
382620	GH
B BODIES	
384906	GA
384907	GB
384908	GC
384909	GD
389280	GJ
389281	GK
C BODIES	
384920	GE
384922	GF

DATE	SYM.	REVISION RECORD	AUTHORITY	DR.	CK.
4-30-64		WAS XB-78842			
5-26-64	A2	PART NO. ADDED		JL	
5-27-64	B2	SPECS REVISED	P-FF		
6-8-64	C	NOTE REVISED		K.H.	WJ
6-12-64	D	3837595 RMVD		K.H.	
6-12-64	E	3864503 ADDED		K.H.	
6-12-64	F2	DIM. ADDED		K.H.	
6-12-64	G	CODE ADDED		K.H.	
6-12-64	H	3837597 RMVD	P-FV	K.H.	WJ

TOLERANCES UNLESS OTHERWISE SPECIFIED ± .02 ALLOWED ON TWO PLACE DECIMALS ± .010 ALLOWED ON THREE PLACE DECIMALS.

ON ALL CASTINGS AND FORGINGS ALLOW FOR FINISH AS FOLLOWS F_1=.030; F_2=.06; F_3=.09; F_4=.12; ETC.

COMMERCIAL TOLERANCES APPLY TO SHEET METAL GAUGES, TUBING, ROLLED, DRAWN OR EXTRUDED SECTIONS AND STANDARD PARTS.

DO NOT SCALE

DWG. DATE APRIL 28, 1964	DR. Hodges
SCALE FULL	CK. L. Holbrook
FIRST USED 1965	APPR. J. R. Lamond
	APPR. R E Ford
REFERENCE	APPR.
MATERIAL SPEC.	
NAME CHART-CODE FRAME	
F.DU C	PART NO. 389029

OLDSMOBILE DIVISION
GENERAL MOTORS CORPORATION
LANSING, MICHIGAN

TYPE TO BE "FUTURA BOLD (603-J)"
SIZE TO BE AS SHOWN
TAPE TO CONFORM TO G.M. 6002-M

1B & 2B-3.1 *

LAST CHANGE H

389029

* ASSIGNMENT OF CODE BY DIVISIONS OTHER THAN OLDSMOBILE

F-85 B/C

GRP. 28 DD

OLDSMOBILE

FRONT SUSPENSION

DRAWING NO.	DRAWING NAME	PAGE NO.
387282	FRONT SUSPENSION	3 - 2.1
381935	FRONT SPRING CHART	3 - 3.1
387878	FRONT & REAR WHEEL ALIGNMENT & TRIM HEIGHTS	3 - 4.1

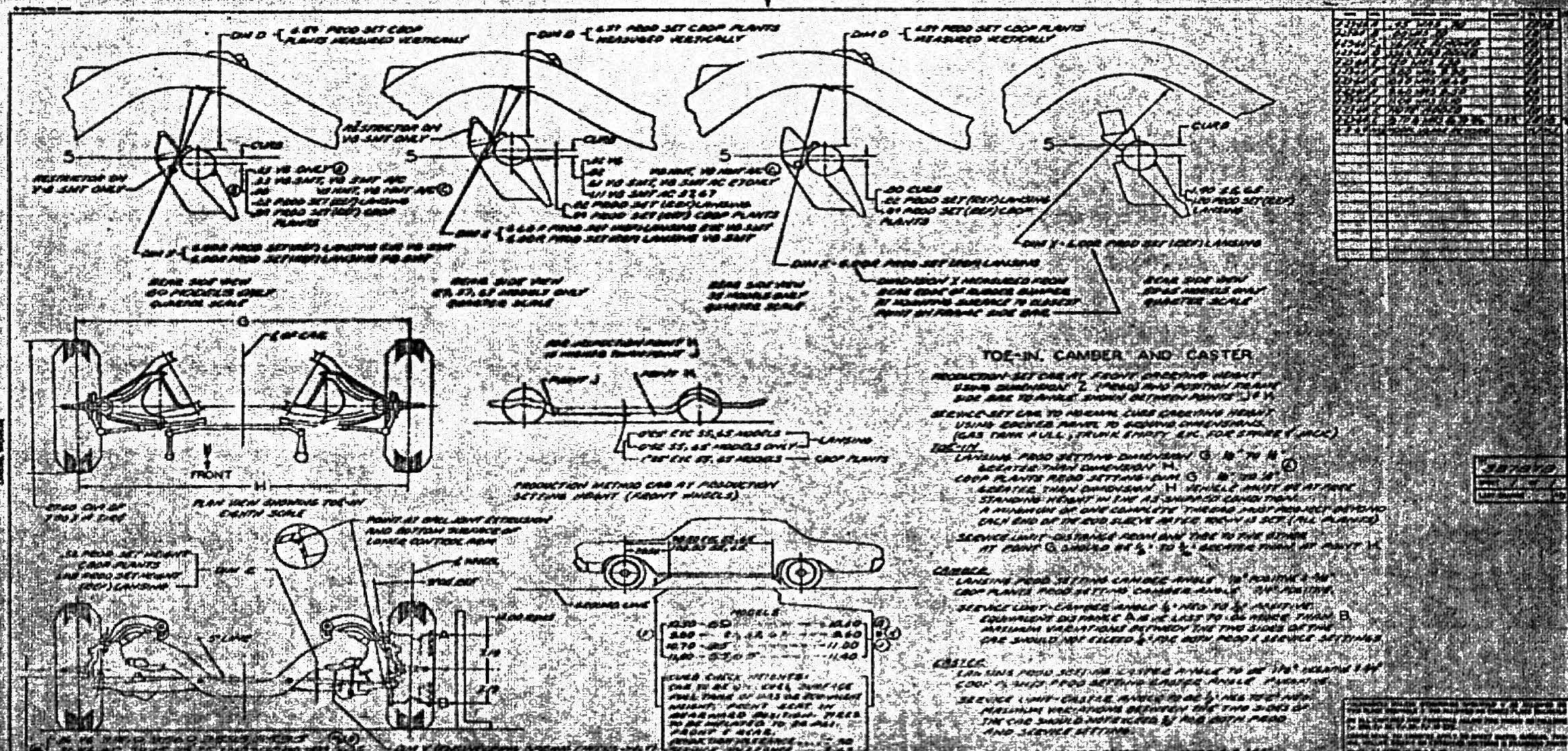

OLDSMOBILE DIVISION
GENERAL MOTORS CORPORATION
LANSING, MICHIGAN

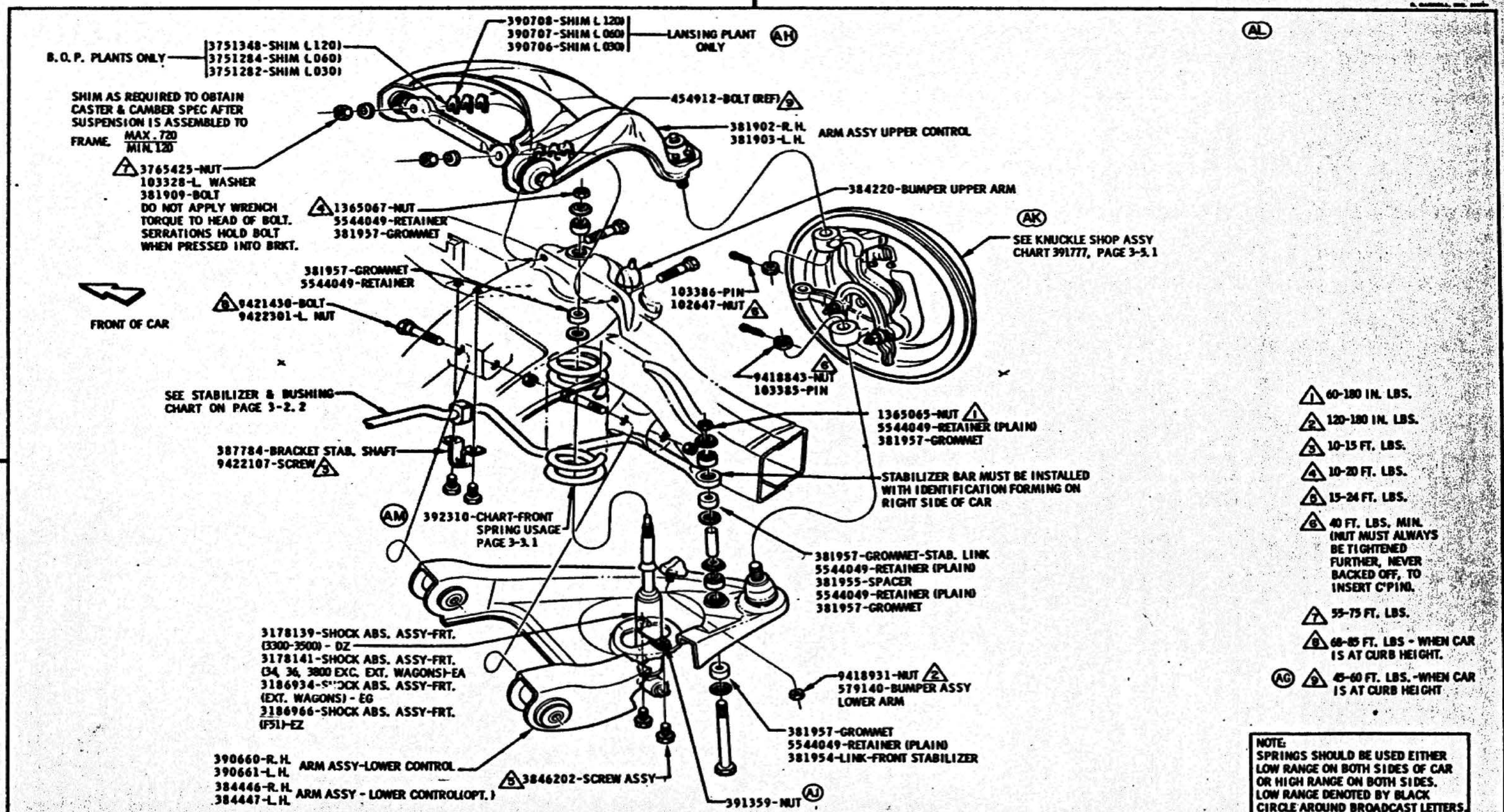

DATE	SYM	REVISION	DR.	CK.	DATE	SYM	REVISION	DR.	CK.	DATE	SYM	REVISION	DR.	CK.
										12-8-64	AJ	WAS 381948		
										10-26-64	AH	PART NO'S ADDED		
					2-25-65	AM	WAS 381935			9-24-64	AG	WAS 55-75 FT. LBS		
					1-6-65	AL	CHART REMOVED			9-24-64	AF	WAS 381910-11 ARM ASSY		
					1-6-65	AK	NOTE REVISED			9-14-64	AE	WAS 103385 PIN		

INSTALLATION **FRONT SUPPLEMENT**

DATE JANUARY 17, 1964
DR. BY R. ACHTERHOF
CHECKED
APPR.
APPR.

FIRST USED 1965 — Oldsmobile Service Illustration — PAGE 3-2.1

MODEL F-85 — REV. — PART NO. 387282

WITH UPPER SPRING TAIL AGAINST STOP IN FRONT CROSSMEMBER SEAT:

THIS HOLE (AT STEP IN SPRING SEAT) MUST NOT BE COVERED BY SPRING TAIL

THIS HOLE MUST ALWAYS BE COVERED BY SPRING TAIL

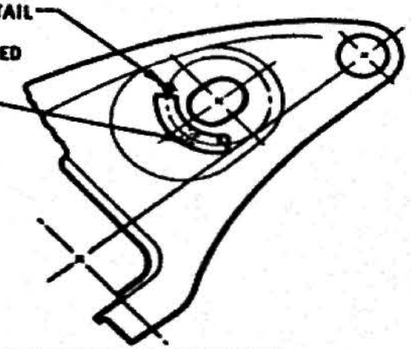

VIEW SHOWING POSITION OF SPRING TAIL AFTER INSTALLATION

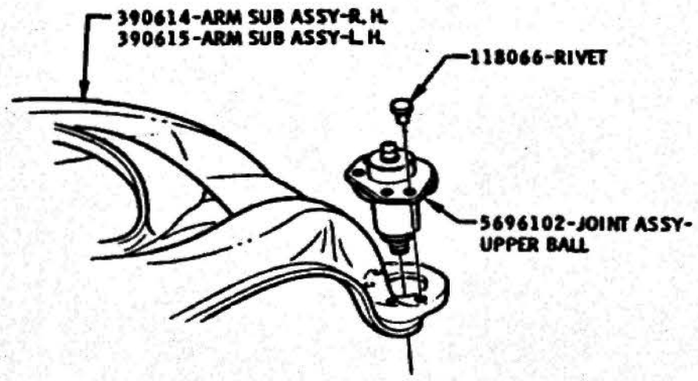

THIS VIEW FOR BOP PLANTS ONLY

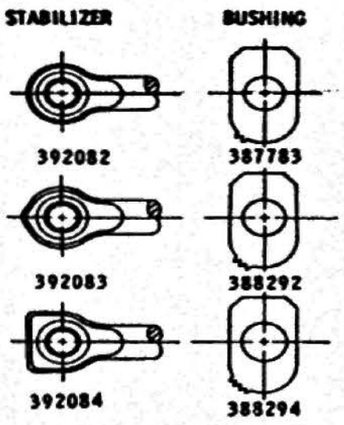

FRONT STABILIZER SHAFT AND MATCHING BUSHING IDENTIFICATION

CHART - FRONT STABILIZER SHAFT & BUSHING

	STABILIZER PART NO.	STAB. DIA.	BUSHING PART NO.	GRP.	MODELS
E	392082	.812	387783	3G	33 & 3500
F	392083	.875	388292	3G	34, 36, 3800 EXC. EXT. WAG. & 3867
G	392084	.937	388294	3G	EXT. WAGONS & 3867
				F58	ALL MODELS

NOTE: INSTALL BUSHINGS WITH SLIT TOWARD FRONT OF CAR

DATE	SYM	REVISION	DR.	CK.	DATE	SYM	REVISION	DR.	CK.	DATE	SYM	REVISION	DR.	CK.
										2-2-65	E	392082 WAS 381953		
										9-24-64	D	WAS 382714-5		
										9-24-64	C	5696102 WAS 5678680		
					5-1-65	G	392084 WAS 383945			8-18-64	B	WAS BOLT & HEX		
					2-2-65	F	392083 WAS 383968			6-17-64	A	HEX WAS BOX		

INSTALLATION — FRONT SUSPENSION

DATE MAY 27, 1964
DR. BY W.E. MASON
CHECKED [illegible]
APPR.
APPR.

FIRST USED 1965

Oldsmobile Service ILLUSTRATION

SERIES F85

REV.

PAGE 3-2.2

PART NO. 387282

OLDSMOBILE DIVISION
GENERAL MOTORS CORPORATION
LANSING, MICHIGAN

FRONT SUSPENSION SPRING USAGE - 1965 F-85

		SM-FS TRANSMISSION		JETAWAY TRANSMISSION		SM-FS & JETAWAY TRANSMISSION				
		3C	35C60	35M33	35C60	97F74 & 98F74		35B01	35B07	35W29
SERIES	MODEL	STD CAR	STD CAR WITH A/C	EXC A/C	WITH A/C	EXPORT	EXPORT WITH A/C	POLICE	POLICE	
33300 V8	27	383909 SD	382818 SJ	383909 SD	382818 SJ	382819 SI	384543 SR	384117 SV	384117 SV	NA
	35	383910 SE	381940 SK	383910 SE	381940 SK	382818 SJ	385016 SU	384117 SV	NA	NA
	69	383910 SE	381946 SL	383910 SE	381946 SL	382818 SJ	384544 SS	384117 SV	384117 SV	NA
33400 V8	27	385016 SU	384752 ST	381940 SK	384752 ST	385016 SU	384752 ST	389421 RP 389422 RS(C60)	389421 RP 389422 RS(C60)	389421 RP 389422 RS(C60)
	35	381946 SL	386288 SY	381946 SL	386288 SY	385016 SU	386288 SY	389421 RP 389422 RS(C60)	NA	NA
	55	384752 ST	388232 RB	384752 ST	388232 RB	384752 ST	388232 RB	389421 RP 389422 RS(C60)	NA	NA
	65	384752 ST	388232 RB	384752 ST	388232 RB	384752 ST	388232 RB	389421 RP 389422 RS(C60)	NA	NA
	69	384544 SS	386288 SY	381946 SL	386288 SY	384544 SS	386288 SY	389421 RP 389422 RS(C60)	389421 RP 389422 RS(C60)	NA
33600 V8	27	383909 SD	382818 SJ	383909 SD	382818 SJ	382819 SI	384543 SR	384117 SV	384117 SV	NA
	35	383910 SE	381940 SK	383910 SE	381940 SK	382818 SJ	385016 SU	384117 SV	NA	NA
	69	383910 SE	381946 SL	383910 SE	381946 SL	382818 SJ	384544 SS	384117 SV	384117 SV	NA
33800 V8	35	381946 SL	386288 SY	381946 SL	386288 SY	385016 SU	386288 SY	389421 RP 389422 RS(C60)	NA	NA
	69	384544 SS	386288 SY	381946 SL	386288 SY	384544 SS	386288 SY	389421 RP 389422 RS(C60)	389421 RP 389422 RS(C60)	NA
3-3.1										
33800 V8	27	384544 SS	386288 SY	381946 SL	384752 ST	384544 SS	386288 SY	389421 RP 389422 RS(C60)	NA	389421 RP 389422 RS(C60)
	37	384544 SS	386288 SY	381946 SL	384752 ST	384544 SS	386288 SY	389421 RP 389422 RS(C60)	NA	389421 RP 389422 RS(C60)
	55	384752 ST	388232 RB	384752 ST	388232 RB	384752 ST	388232 RB	389421 RP 389422 RS(C60)	NA	NA
	65	384752 ST	388232 RB	384752 ST	388232 RB	384752 ST	388232 RB	389421 RP 389422 RS(C60)	NA	NA
	67	384752 ST	386288 SY	384544 SS	386288 SY	384752 ST	386288 SY	NA	NA	389421 RP 389422 RS(C60)

SPRINGS SHOULD BE USED EITHER LOW RANGE ON BOTH SIDES OF CAR OR HIGH RANGE ON BOTH SIDES OF CAR.

TAPE IDENTIFICATION-
HIGH LOAD RANGE - PLAIN IDENTIFICATION
LOW LOAD RANGE - BLACK CIRCLE AROUND CODE LETTER
FOR SPRING DETAIL SEE DRAWING 381936

CHART-FRONT SPRING USAGE
392310
DO NOT SCALE

OLDSMOBILE DIVISION
GENERAL MOTORS CORPORATION
LANSING, MICHIGAN

FRONT SUSPENSION SPRING USAGE - 1965 F-85

		SM-FS TRANSMISSION		JETAWAY TRANSMISSION		SM-FS & JETAWAY TRANSMISSION				
		3C	35C60	35M33	35C60	97F74 & 98F74		35B01	35B07	35W29
SERIES	MODEL	STD CAR	STD CAR WITH A/C	EXC A/C	WITH A/C	EXPORT	EXPORT WITH A/C	POLICE	POLICE	
33300 V8	27	383909 SD	382818 SJ	383909 SD	382818 SJ	382818 SJ	384543 SR	384117 SV (2)	384117 SV (2)	NA
	35	383910 SE	381940 SK	383910 SE	381940 SK	382818 SJ	385016 SU	384117 SV	NA	NA
	69	383910 SE	381946 SL	383910 SE	381946 SL	382818 SJ	384544 SS	384117 SV	384117 SV	NA
33400 V8	27	385016 SU	384752 ST	381940 SK	384752 ST	385016 SU	384752 ST	389421 RP (2)(C) 389422 RS (C601)	389421 RP (2)(C) 389422 RS (C601)	389421 RP 389422 RS (C601)
	35	381946 SL	386288 SY	381946 SL	386288 SY	385016 SU	386288 SY	389421 RP (2) 389422 RS (C601)	NA	NA
	55	384752 ST	388232 RB	384752 ST	388232 RB	384752 ST	388232 RB	389421 RP (2) 389422 RS (C601)	NA	NA
	65	384752 ST	388232 RB	384752 ST	388232 RB	384752 ST	388232 RB	389421 RP (2) 389422 RS (C601)	NA	NA
	69	384544 SS	386288 SY	381946 SL	386288 SY	384544 SS	386288 SY	389421 RP (2) 389422 RS (C601)	389421 RP (2) 389422 RS (C601)	NA (4)
33600 V8	27	383909 SD	382818 SJ	383909 SD	382818 SJ	382818 SJ	384543 SR	384117 SV (2)	384117 SV (2)	NA
	35	383910 SE	381940 SK	383910 SE	381940 SK	382818 SJ	385016 SU	384117 SV	NA	NA
	69	383910 SE	381946 SL	383910 SE	381946 SL	382818 SJ	384544 SS	384117 SV	384117 SV	NA
33800 V8	35	381946 SL	386288 SY	381946 SL	386288 SY	385016 SU	386288 SY	389421 RP (2) 389422 RS (C601)	NA	NA
	69	384544 SS	386288 SY	381946 SL	386288 SY	384544 SS	386288 SY	389421 RP (2) 389422 RS (C601)	389421 RP (2) 389422 RS (C601)	NA (4)
3-3-3										
33800 V8	27	384544 SS	386288 SY	381946 SL	384752 ST	384544 SS	386288 SY	389421 RP (2)(C) 389422 RS (C601)	NA	389421 RP 389422 RS (C601)
	37	384544 SS	386288 SY	381946 SL	384752 ST	384544 SS	386288 SY	389421 RP (2)(C) 389422 RS (C601)	NA	389421 RP 389422 RS (C601)
	55	384752 ST	388232 RB	384752 ST	388232 RB	384752 ST	388232 RB	389421 RP (2) 389422 RS (C601)	NA	NA
	65	384752 ST	388232 RB	384752 ST	388232 RB	384752 ST	388232 RB	389421 RP (2) 389422 RS (C601)	NA	NA
	67	384752 ST	386288 SY	384544 SS	386288 SY	384752 ST	386288 SY	NA	NA	389421 RP 389422 RS (C601)

SPRINGS SHOULD BE USED EITHER LOW RANGE ON BOTH SIDES OF CAR OR HIGH RANGE ON BOTH SIDES OF CAR.

TAPE IDENTIFICATION -
HIGH LOAD RANGE - PLAIN IDENTIFICATION
(2) LOW LOAD RANGE - BLACK CIRCLE AROUND CODE LETTER

CHART - FRONT SPRING
381935

DO NOT SCALE
UNLESS DIMENSIONED

SHEET 3 OF 3

USAGE

STEERING KNUCKLE ASSEMBLIES

CODE	STEERING	MODEL	FIRST TYPE PART NO.	SECOND TYPE PART NO.	THIRD TYPE PART NO.
OE	MANUAL	5200	387806-R. 387807-L.	391660-R. 391661-L.	
OC	POWER	5200	387814-R. 387815-L.	391662-R. 391663-L.	
OM	MANUAL	5200 WITH J-56	387960-R. 387961-L.	391664-R. 391665-L.	
OL	POWER	5200 WITH J-56	387962-R. 387963-L.	391666-R. 391667-L.	
OF	MANUAL	54, 56, 58	387808-R. 387809-L.	390692-R. 390693-L.	
OA	POWER	66, 84, 86 54, 56, 58	387810-R. 387811-L.	390694-R. 390695-L.	391668-R. 391669-L.
OJ	MANUAL	56, 58 WITH J-56	387964-R. 387965-L.		
OR	POWER	56, 58, 84 WITH J-56	387966-R. 387967-L.	391670-R. 391671-L.	
OH	MANUAL	56, 58 WITH B01-B07	387970-R. 387971-L.		
OG	POWER	56, 58 WITH B01-B07	387972-R. 387973-L.	391672-R. 391673-L.	
OS	MANUAL	56, 58 WITH Y-75	387974-R. 387975-L.		
ON	POWER	56, 58 WITH Y-75	387976-R. 387977-L.	391674-R. 391675-L.	
OT	MANUAL	56, 58 WITH Y-75	387978-R. 387979-L.		
OP	POWER	56, 58 WITH Y-75	387980-R. 387981-L.	391676-R. 391677-L.	
OB		ALL F-85 EXC. EXT. WAGONS	383072-R. 383073-L.		
OD		ALL F-85 EXT. WAGONS	386088-R. 386089-L.		
OK		ALL F-85 WITH J-56	389164-R. 389165-L.		

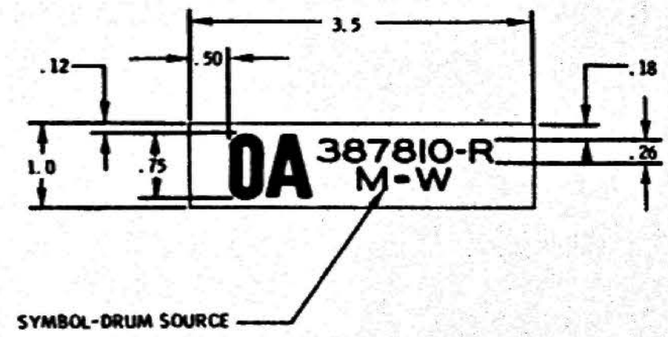

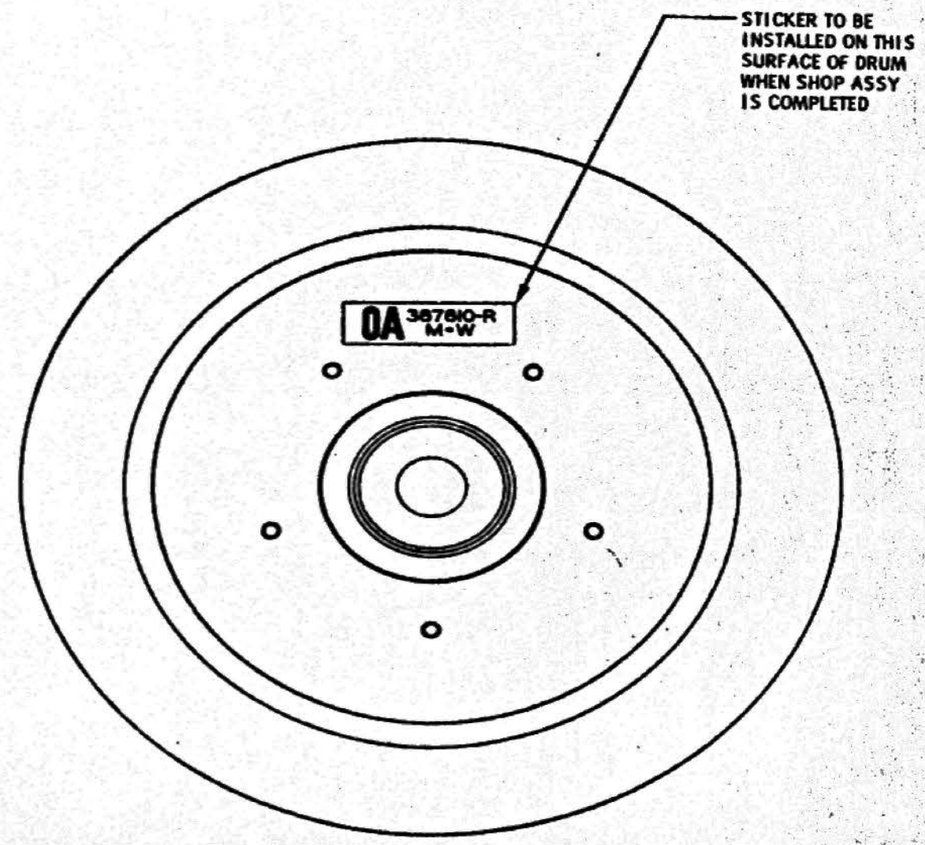

DATE	SYM	REVISION	DR.	CK.	DATE	SYM	REVISION	DR.	CK.	DATE	SYM	REVISION	DR.	CK.

CHART - KNUCKLE SHOP ASSEMBLY CODE

DATE JAN. 4, 1965
DR. BY J. D. SMITH
CHECKED J. N. ANGES
APPR. [illegible]
APPR.

FIRST USED 1965

Oldsmobile GRAPHIC ILLUSTRATION

SERIES A-B-C

REV.

PAGE 3-5.1 *

PART NO. 391777

OLDSMOBILE DIVISION GENERAL MOTORS CORPORATION LANSING 21, MICHIGAN

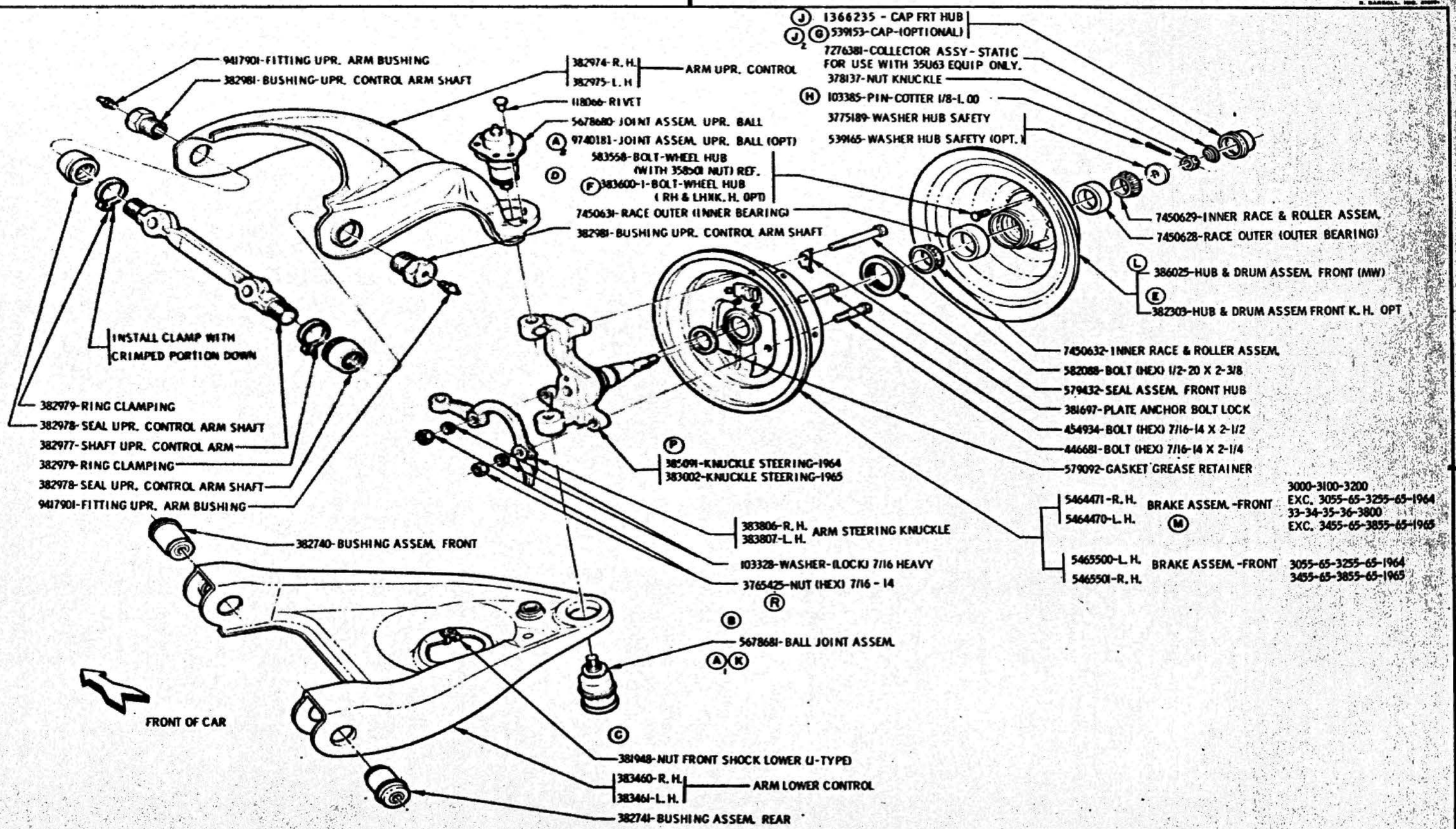

DATE	SYM	REVISION	DR.	CK.	DATE	SYM	REVISION	DR.	CK.	DATE	SYM	REVISION	DR.	CK.
11-22-65	R	3765425 WAS 941176B	WW	WJ	8-28-65	K	9740072 OPTION REMOVED	WJ	WJ	6-4-65	E	382303 ADDED	RE	RL
11-14-65	P	385091 ADDED	WW	WJ	7-31-65	J2	1366235 OPT NOTE ADDED	R	WJ	6-4-65	D	382301 REMOVED	RE	RL
11-8-65	N	1965 MODEL USAGE ADDED	R	WJ	7-1-65	H	103385 WAS 108635	R	WJ	5-17-65	C	9410751 NUT REMOVED	JM	JD
10-12-65	M	PART NOS & MODELS ADDED	R	WJ	6-27-65	G	539153 CAP WAS 539119	R	WJ	5-17-65	B	DRAWING CURVEC REVISED	JM	JD
10-9-65	L	386025 WAS 382300	R	WJ	6-27-65	F	383600-1 "OPT" BOLT ADDED	R	WJ	4-23-65	A2	OPTIONS ADDED	RL	RS

INSTALLATION	FRONT SUSPENSION		SHEET 1 OF 2
DATE FEB. 18, 1963	FIRST USED 1964	Oldsmobile GRAPHIC ILLUSTRATION	PAGE 3-5.1
DR. BY D. BILLEADEAUX	SERIES 1964-30-31-3200 1965-33-34-35-36-3800	REF.	PART NO. 383696
CHECKED R. C. Steel			
APPR. J. C. Summers			
APPR.			

OLDSMOBILE DIVISION GENERAL MOTORS CORPORATION LANSING 21, MICHIGAN

ARM ASSEMBLIES ARE TO BE KEPT IN PAIRS IN ANY ONE CAR BUILD-UP.
-FOR EXAMPLE-
UPPER ARM ASSEM. 382970 R.H. & 382971 L.H.
OR
UPPER ARM ASSEM. 384714 R.H. & 384715 L.H.
LOWER ARM ASSEM. 381910 R.H. & 381911 L.H.

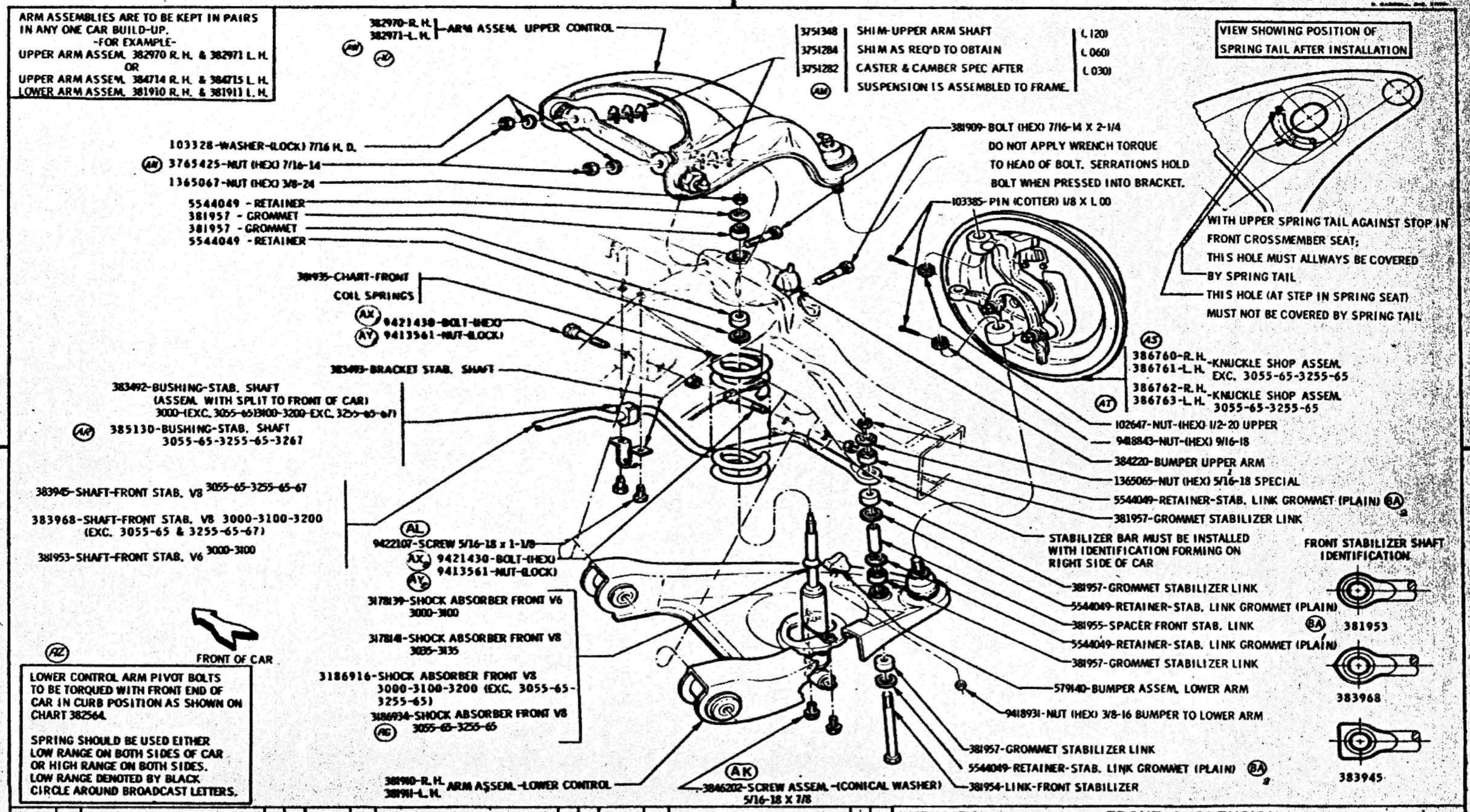

LOWER CONTROL ARM PIVOT BOLTS TO BE TORQUED WITH FRONT END OF CAR IN CURB POSITION AS SHOWN ON CHART 382564.

SPRING SHOULD BE USED EITHER LOW RANGE ON BOTH SIDES OF CAR OR HIGH RANGE ON BOTH SIDES. LOW RANGE DENOTED BY BLACK CIRCLE AROUND BROADCAST LETTERS.

DATE	BY	REVISION
6-12-64	BA	PLAIN ADDED
3-10-64	NC	NOTE REVISED
3-10-64	AY	9413561 WAS 9421001
3-10-64	AY	9421430 WAS 9420932

INSTALLATION — FRONT SUSPENSION — SHEET 2 OF 2

DATE FEB. 18, 1963
DR. BY D. BILLEADEAUX
CHECKED
APPR.
APPR.

FIRST USED 1964 — Oldsmobile GRAPHIC ILLUSTRATION — PAGE 3-5.2

SERIES 30-31-3200 — REF. — PART NO. 383696

REAR SUSPENSION

DRAWING NO.	DRAWING NAME	PAGE NO.
387280	PROPELLER SHAFT	4 - 2.1
387283	REAR SUSPENSION	4 - 3.1
387281	SUPERLIFT SHOCK ABSORBER	4 - 4.1
---	REAR SPRING CHART	4 - 6.1
388099	REAR AXLE USAGE CHART	4 - 7.1
388837	DIFFERENTIAL DAMPER - EXTENDED WAGONS	4 - 8.1

(L)

PROPELLER SHAFT USAGE CHART			
PART NO.	COLOR CODE	GROUP	MODELS
(K) 5695098	(1) RED (1) WHITE	4A4	ALL SM MODELS EXC. EXT. WAGONS & G71
5695094	(1) RED (1) BLACK	4A4	ALL SM EXT. WAGONS
5697021	(1) GOLD	G71	4S SM (M21) EXC. EXT. WAGONS
5697022	(2) GOLD	G71	3S SM (M14) (M13 2ND TYPE)
5697023	(1) GREEN (1) YELLOW (1) WHITE	G71	AT (M32) EXC. EXT. WAGONS
5679502	(1) GREEN (1) YELLOW	M33	ALL EXC. EXT. WAGONS
5693802	(1) GREEN (1) PURPLE	M33	ALL EXT. WAGONS

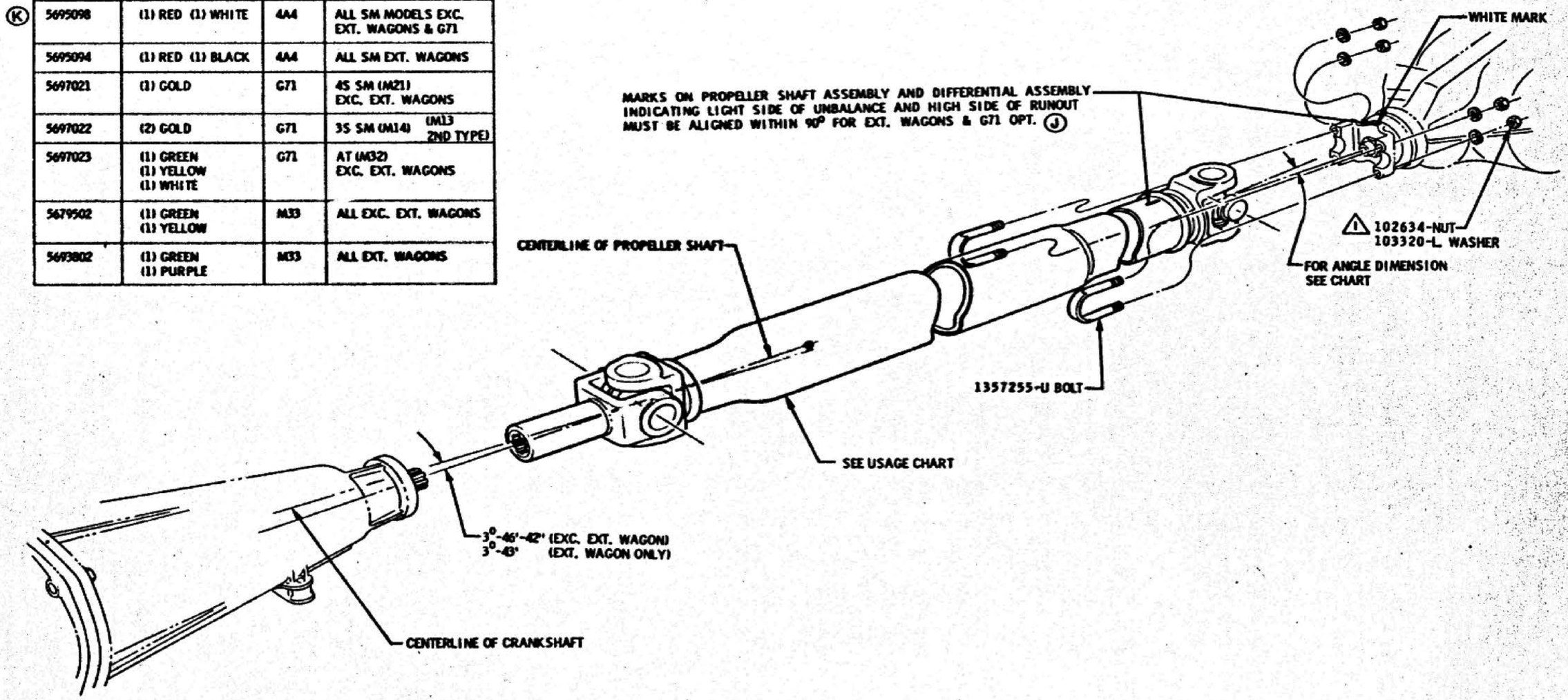

(1) 12-16 LBS. FT.

DATE	SYM	REVISION	DR.	CK.	DATE	SYM	REVISION	DR.	CK.	DATE	SYM	REVISION	DR.	CK.
					10-15-64	K	5695098 WAS 5695099			5-21-64	E	PROP SHAFT NOS. REV		
					8-18-64	J	WAS 807 & YY28			5-11-64	D	807 & 809 OPT. ADDED		
					7-28-64	H	USAGE CHART ADDED			4-30-64	C	COLOR CODE ADDED		
					6-29-64	G	W29 WAS 809			4-20-64	B	5693801 REMOVED		
1-7-65	L	CHART REVISED			6-23-64	F	TORQUE SPEC ADDED			2-10-64	A	NOTE ADDED		

INSTALLATION
DATE JANUARY 9, 1964
DR. BY R. ACHTERHOF
CHECKED
APPR.
APPR.

PROPELLER SHAFT

FIRST USED 1965

Oldsmobile GRAPHIC ILLUSTRATION

PAGE 4-2.1

SERIES F-85

REF.

PART NO. 387280

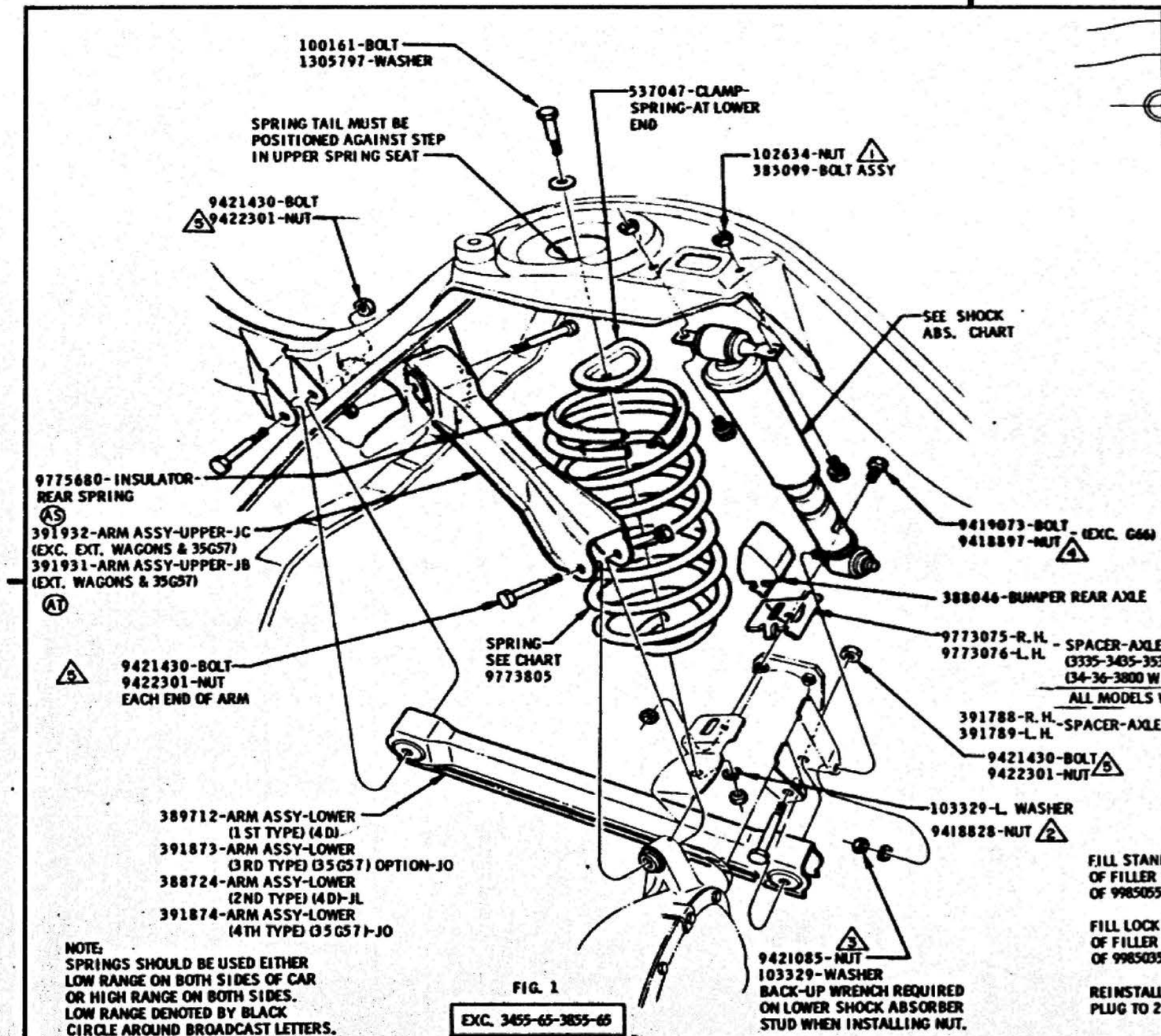

FIG. 1

EXC. 3455-65-3855-65

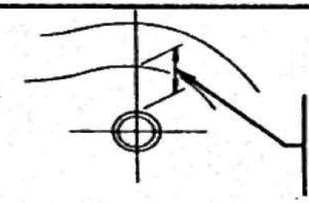

PRODUCTION SETTING

TIGHTEN UPPER & LOWER CONTROL ARM BUSHING BOLTS WITH SPRING COMPRESSED SO TOP OF AXLE TO FRAME IS 5.00 ± .50.

(AU) 9421430-BOLTS MUST BE INSTALLED IN DIRECTION SHOWN FOR LOWER CONTROL ARM & EXTENDED WAGON UPPER ARM FRONT POSITIONS. UPPER CONTROL ARM POSITIONS EXCEPT FOR EXTENDED WAGON ARE OPTIONAL. TORQUE NUTS OR BOLTS AT ASSEMBLY. SPECIFIED TORQUE APPLIES ONLY WHEN CHECKING ON NUT.

(1) 15-24 FT. LBS.
(2) 20-30 FT. LBS.
(3) 30-60 FT. LBS.
(4) 35-55 FT. LBS.
(5) 65-85 FT. LBS.

FILL STANDARD DIFFERENTIALS TO BOTTOM OF FILLER PLUG HOLE WITH 3.00 PINTS OF 9985055 DIFFERENTIAL OIL.

FILL LOCKING TYPE DIFFERENTIALS TO BOTTOM OF FILLER PLUG HOLE WITH 3.00 PINTS OF 9985035 DIFFERENTIAL OIL.

REINSTALL DIFFERENTIAL FILLER PLUG TO 25-35 LBS. FT.

CHART - SHOCK ABSORBER ASSY

SHOCK ABS. ASSY	GRP.	MODEL	IDENT.
3186947	4	EXC. S.W.	BB
3186967	F51	EXC. EXT. WAGON	FA
3178142	4	S.W. EXC. EXT. WAGON	EB
3178161	4	EXT. WAGON	EC
3178191	F-51	EXT. WAGON	EF

NOTE:
SPRINGS SHOULD BE USED EITHER LOW RANGE ON BOTH SIDES OF CAR OR HIGH RANGE ON BOTH SIDES.
LOW RANGE DENOTED BY BLACK CIRCLE AROUND BROADCAST LETTERS.

DATE	SYM	REVISION	DR.	CK.	DATE	SYM	REVISION	DR.	CK.	DATE	SYM	REVISION	DR.	CK.
					2-2-65	AP	391873 WAS 389713			11-20-64	AK	NOTE ADDED		
3-4-65	AU	NOTE REVISED			1-19-65	AN	G71 SPACER ADDED			11-6-64	AJ	NOTE REVISED		
2-16-65	AT	391931 WAS 387947					WAS 271500-NUT			10-16-64	AH	NOTE REVISED		
2-16-65	AS	391932 WAS 388261				AM	WAS 179858-BOLT &			10-12-64	AG	M 32 ADDED		
2-2-65	AR	391874 WAS 388725			12-9-64	AL	WAS 102637 NUT			9-29-64	AF	NOTE REVISED		

INSTALLATION **REAR SUSPENSION**

DATE JANUARY 14, 1964
DR. BY C. M. [illegible]
CHECKED [illegible]
APPR.
APPR.

FIRST USED 1965

Oldsmobile Service ILLUSTRATION

MODEL F-85

REV.

PAGE 4-3.1

PART NO. 387283

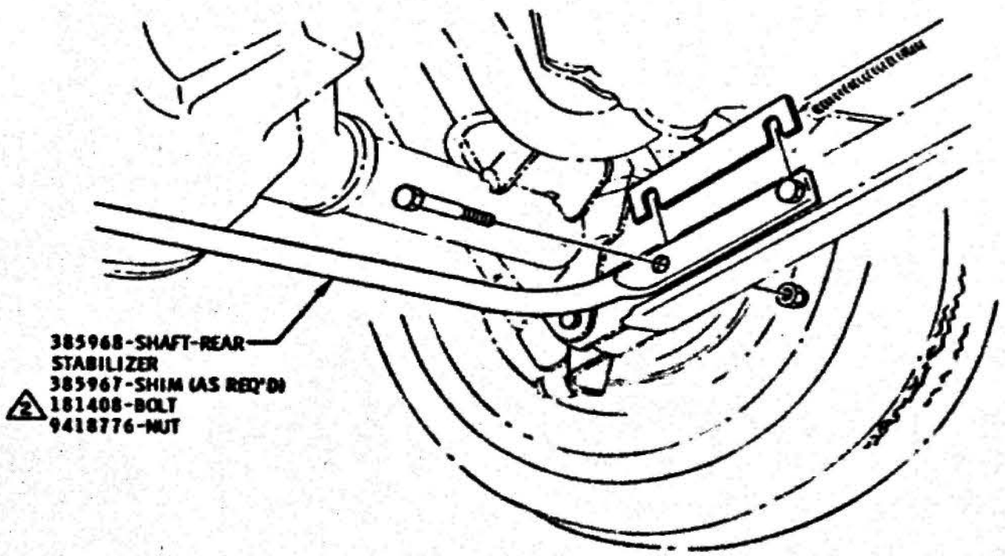

REAR STABILIZER SHAFT INSTALLATION-009

Ⓐ Ⓓ

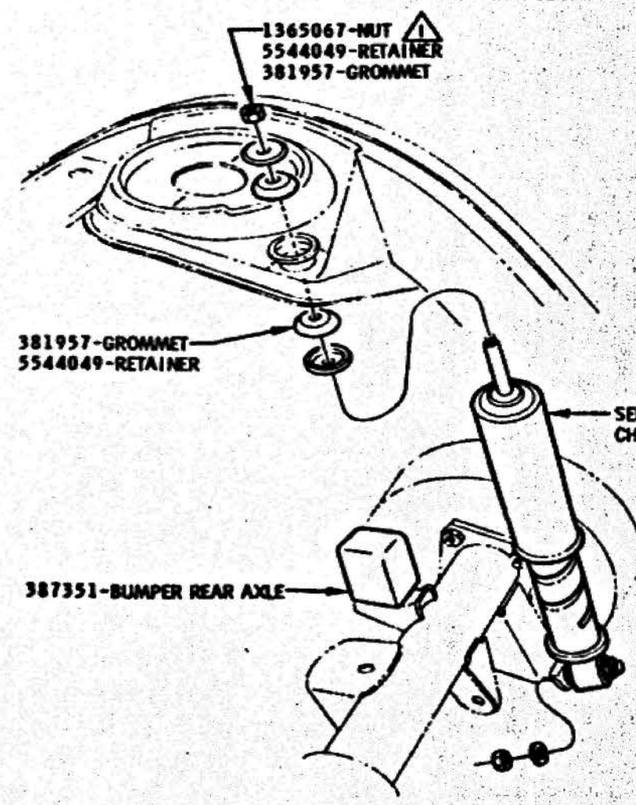

FIG. 2

3455-65-3855-65

UNLESS OTHERWISE SPECIFIED ALL ATTACHING PARTS SAME AS SHOWN IN FIGURE 1 ON PAGE 4-3.1.

Ⓑ 1 10-20 FT. LBS.

2 45-55 FT. LBS. Ⓒ

DATE	SYM	REVISION	DR.	CK.	DATE	SYM	REVISION	DR.	CK.	DATE	SYM	REVISION	DR.	CK.
										8-18-66	D	WAS 807 - 809		
										7-21-64	C	WAS 25-30 FT. LBS.		
										7-1-64	B	TORQUE SPEC. ADDED		
										6-22-64	A	W29 WAS 809		

INSTALLATION REAR SUSPENSION

DATE JUNE 4, 1964
DR. BY W.E. MASON
CHECKED TITUS
APPR.
APPR.

FIRST USED 1965
Oldsmobile GRAPHIC ILLUSTRATION
SERIES F85
REF.
PAGE 4-3.2
PART NO. 387283

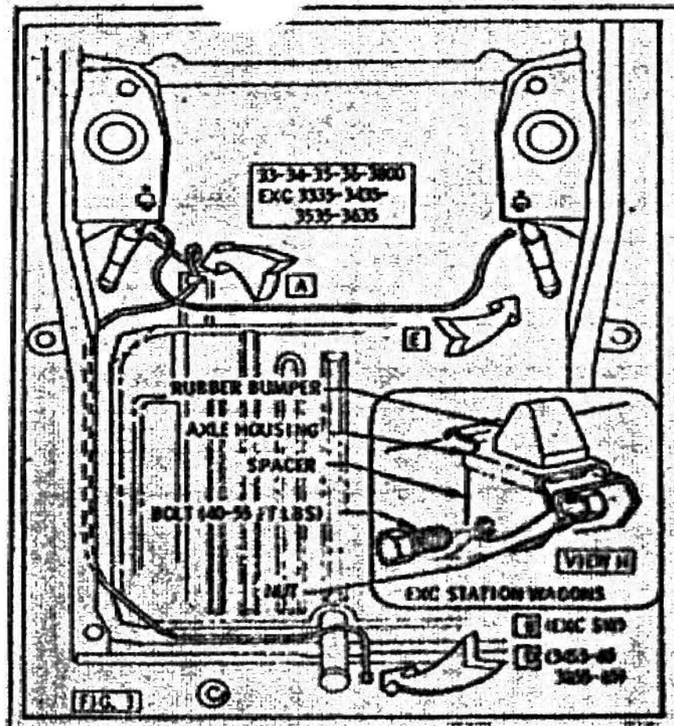

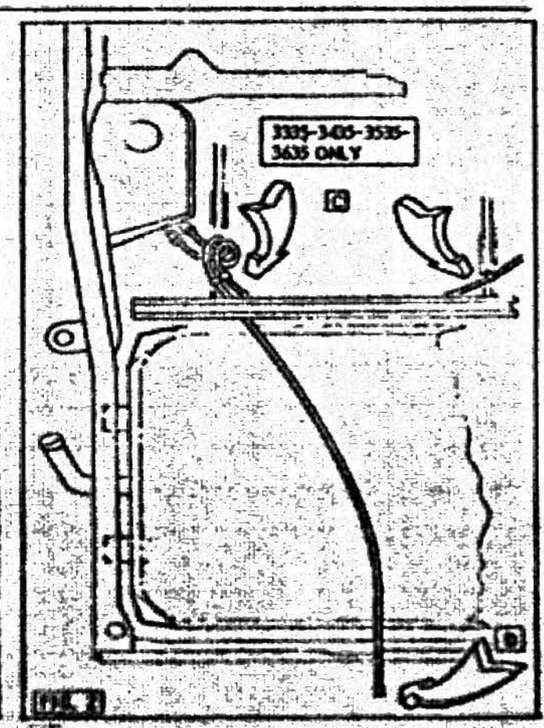

GENERAL INSTRUCTIONS (A)

1. GUARD AGAINST KINKING NYLON TUBING. KINKED LINES WILL RESULT IN TUBING FAILURE.
2. AT EVERY PLUMBING CONNECTION, USE THE FOLLOWING PROCEDURE TO ASSEMBLE THE 1/8" DIA BLACK TUBING AND FITTINGS PER VIEW G.
   - A. PREASSEMBLE METAL SLEEVE AND RUBBER SEAL.
   - B. DROP TUBE NUT ON TUBING.
   - C. INSERT END OF BLACK TUBING INTO METAL SLEEVE AND RUBBER SEAL ASSEMBLY UNTIL IT BOTTOMS IN THE RUBBER SEAL. DO NOT FORCE TUBING ALL THE WAY THROUGH RUBBER SEAL.
   - D. HOLD TUBING IN BOTTOMED POSITION IN RUBBER SEAL AND TIGHTEN TUBE NUT SECURELY.

FOR INSTRUCTION INFORMATION RELATIVE TO THE FIGURES AND VIEWS SHOWN ON THIS SHEET, REFER TO SHEET 2.

NOTE TO INSTALLER. -

1. ATTACH "CAUTION" LABEL TO INSIDE OF GLOVE BOX. VIEW J
2. PLACE OWNERS GUIDE AND WARRANTY CARD IN GLOVE BOX.

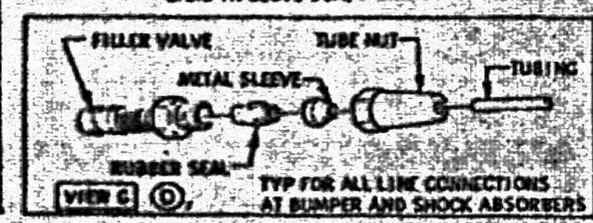

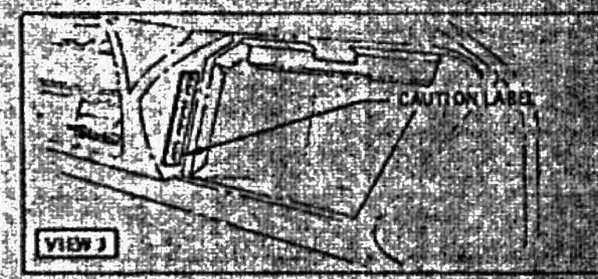

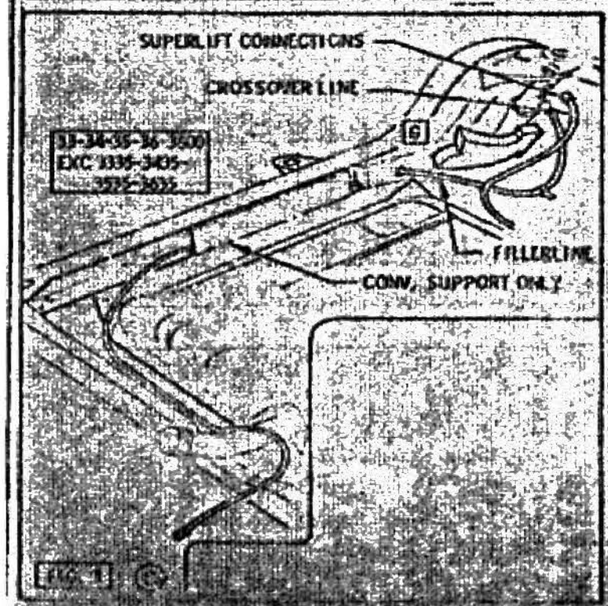

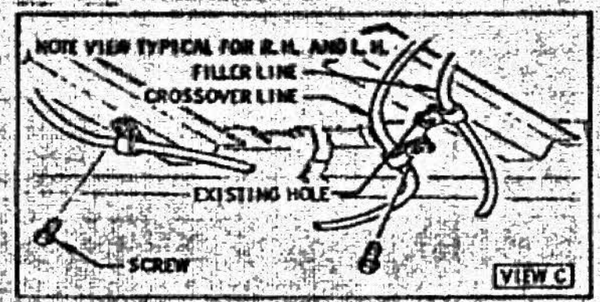

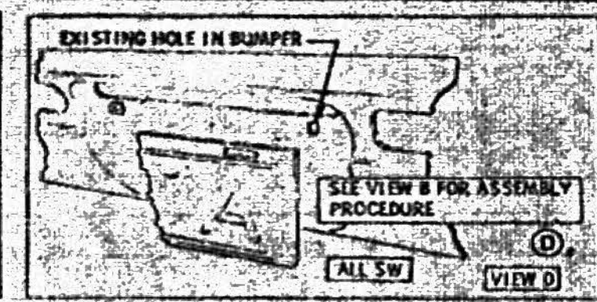

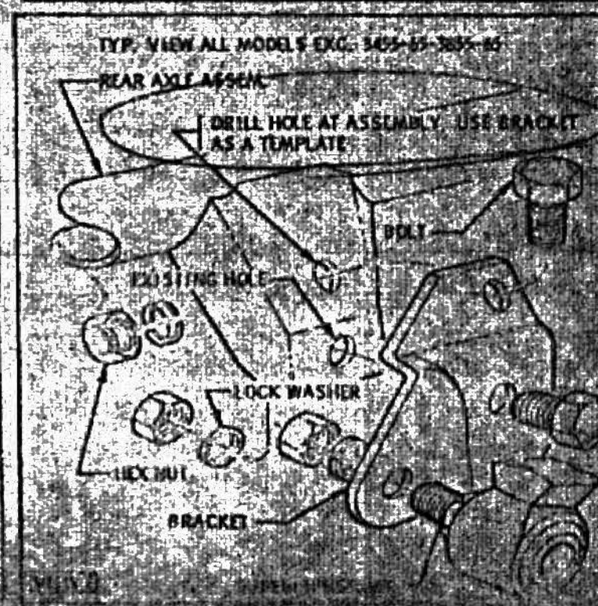

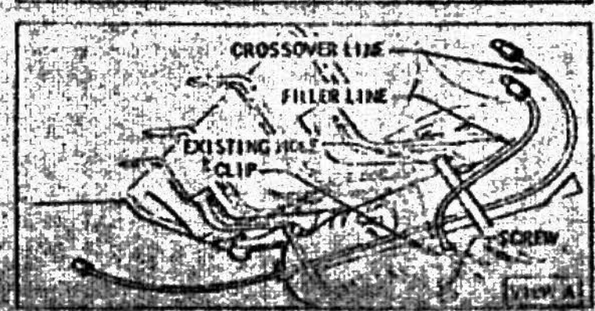

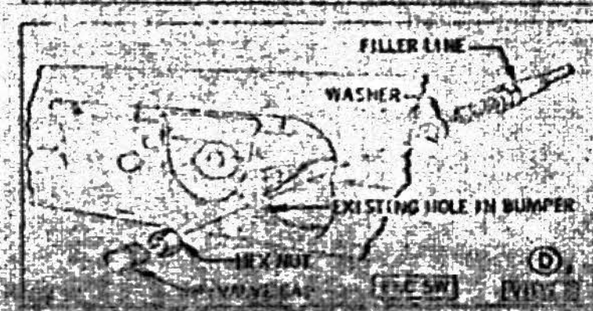

| | | |

SUPERLIFT INSTALLATION

1. RAISE CAR ON A HOIST THAT WILL [illegible] REAR WHEELS IN NORMAL RELATIONSHIP WITH CAR BODY. IF FRAME LIFTING TYPE HOIST IS USED, PLACE STANDS UNDER REAR AXLE TO MAINTAIN NORMAL WHEEL TO BODY RELATIONSHIP.
2. REMOVE REAR SHOCKS. RETAIN ATTACHING PARTS FOR INSTALLING SUPERLIFTS.
3. ON ALL CARS EXCEPT STATION WAGONS, REMOVE EXISTING RUBBER COMPRESSION BUMPERS. RUB WET SOAP ONTO ATTACHING LUGS. PULL THROUGH SLOT OF FURNISHED BUMPER SPACER 1977375-61 WITH PLIERS. ATTACH PER VIEW "B". MODIFY BOTH RIGHT AND LEFT HAND COMPRESSION BUMPERS.
4. ON ALL CARS EXCEPT VISTA CRUISER MODELS, INSTALL FURNISHED SHOCK ABSORBER LOWER MOUNTING BRACKET EXTENSIONS 9776474 R.H. AND 9776475 L.H. AS FOLLOWS:
   A. INSERT FURNISHED 1/2" BOLT THROUGH AN IDLE HOLE OF L.H. BRACKET EXTENSION AND HOLE IN AXLE BRACKET WHERE SHOCK WAS REMOVED PER VIEW "E". POSITION TOP HOLE OF EXTENSION BRACKET DIRECTLY ABOVE BOLT. ADD LOCKWASHER AND NUT, AND TIGHTEN NUT. THE EXTENSION BRACKET POSITIONS LOWER END OF SHOCK INBOARD AND TOWARD REAR OF CAR.
   B. DRILL CLEARANCE HOLE FOR 1/2" BOLT IN AXLE BRACKET USING TOP HOLE OF EXTENSION BRACKET AS A TEMPLATE.
   C. INSERT 1/2" BOLT, ADD LOCKWASHER AND NUT, TIGHTEN NUT.
   D. ATTACH R.H. EXTENSION BRACKET IN SAME MANNER.
5. INSTALL DUAL PORT SUPERLIFT ON LEFT SIDE OF CAR AND SINGLE PORT UNIT ON RIGHT SIDE. PORTS WILL BE FACING INBOARD TO CENTER OF CAR. TO AVOID TWISTING RUBBER SLEEVE, DO NOT ROTATE FREE END OF SUPERLIFT AFTER ONE END HAS BEEN ATTACHED.

Ⓑ

FILLER VALVE INSTALLATION

1. FILL SPARE AIR DOUBLES
   A. ATTACH FILLER VALVE TO FILLER LINE USING TUBE NUT, METAL SLEEVE AND RUBBER SEAL PER VIEW C AND GENERAL INSTRUCTIONS.
   B. INSERT FILLER VALVE THRU DEPRESSED HOLE IN BUMPER BEHIND LICENSE PLATE BRACE AND ATTACH TO BUMPER PER VIEW B.

ALL STATION WAGONS

   C. REMOVE LICENSE PLATE. REMOVE A.K. PLASTIC NUT FROM BUMPER AND DISCARD.
   D. ATTACH FILLER VALVE TO FILLER LINE USING TUBE NUT, METAL SLEEVE AND RUBBER SEAL PER VIEW C AND GENERAL INSTRUCTIONS.
   E. ATTACH FILLER VALVE THRU HOLE IN BUMPER WHERE PLASTIC NUT WAS REMOVED. REPLACE LICENSE PLATE AND ATTACH PER VIEW B.

Ⓐ

CROSSOVER AND FILLER LINE INSTALLATION

1. FOR CROSSOVER LINE ON ALL MODELS EXCEPT 3335-3435-3535-3635, CUT A [illegible] LENGTH OF NYLON TUBING. CUT A 42-1/2" LENGTH FOR 3335-3435-3535-3635 MODELS.
2. ON ALL MODELS EXCEPT 3335-3435-3535-3635, ROUTE CROSSOVER LINE BEHIND GAS TANK STRAPS PER FIGURE 1, VIEW A. ON 3335-3435-3535-3635, ROUTE AND CLIP TO UNDERBODY PER FIGURE 2, VIEW C. ATTACH ENDS OF CROSSOVER LINE TO SUPERLIFT AIR PORTS USING TUBE NUTS, METAL SLEEVES AND RUBBER SEALS PER VIEW G AND GENERAL INSTRUCTIONS. ON THE DUAL PORT SUPERLIFT, ATTACH CROSSOVER LINE TO TOP PORT USING TUBE NUT, METAL SLEEVE AND RUBBER SEAL PER VIEW G.
3. FOR FILLER LINE ON ALL MODELS EXCEPT 3335-3435-3535-3635, CUT AN 80" LENGTH OF TUBING. CUT A 57" LENGTH FOR 3335-3435-3535-3635 MODELS.
4. ON 3335-3435-3535-3635 MODELS, ROUTE LINE OVER TOP OF GAS TANK TO REAR LICENSE PLATE PER FIGURE B. ON ALL OTHER MODELS, ROUTE [illegible] HAND SIDE RAIL TO REAR LICENSE PLATE PER FIGURE 1, OR 2. ATTACH END OF FILLER LINE TO LOWER PORT OF L.H. SUPERLIFT.
5. ON 3335-3435-3535-3635 MODELS, SECURE FILLER LINE PER VIEW [illegible] ON ALL OTHER MODELS, SECURE PER VIEW A. ADJUST CROSSOVER AND FILLER LINES FOR MAXIMUM CLEARANCE TO TAIL PIPE. LEAVE A GENEROUS LOOP AT SUPERLIFT PORTS TO ALLOW FOR SUPERLIFT MOVEMENT IN THE AXLE JOURNAL [illegible]

LEAK CHECK

1. FILL SUPERLIFT [illegible] FILLER VALVE [illegible]
2. CHECK MULTITUBE [illegible] CAR [illegible] WITH A SOAP AND WATER SOLUTION. CORRECT ANY LEAKS FOUND.
3. EXHAUST AIR FROM SYSTEM BY PUSHING IN STEM IN FILLER VALVE [illegible] A MINIMUM PRESSURE OF [illegible]
4. PARTS NOT USED MAY BE RETURNED AFTER INSTALLATION [illegible]

Ⓒ

FOR FIGURES AND VIEWS [illegible] INSTALLATION OF SUPERLIFTS, SEE [illegible]

OLDSMOBILE DIVISION
GENERAL MOTORS CORPORATION
LANSING — MICHIGAN

STD. TYPE DIFFERENTIAL (EXC. 3455, 65, 3855, 65)

EQUIPMENT	AXLE ASSY	CODE	RATIO	AXLE SUB ASSY SHOWN ON CHART		SHAFT ASSY AXLE	BRAKE ASSY LH, RH	DRUM ASSY BRAKE
				BUICK 1369606	PONTIAC 9779792			
EXC. J56	386104	SA	2.78	1370715	9780022	385259	5467122 5467123	382306 OR 382307
	386105	SC	3.08	1370717				
	386105	SC	3.08		9779795			
	386106	SE	3.23		9779796			
	386110	SJ	3.55		9779798			
⊗	390112	TG	3.90		9779799			
WITH J56	390057	SK	2.78	1370715	9780022	385259	5465492 5465493	383829
	390058	SO	3.08	1370717				
	390058	SO	3.08		9779795			
	390059	SV	3.23		9779796			
	390060	SX	3.55		9779798			
⊗	390113	TJ	3.90		9779799			

STD. TYPE DIFFERENTIAL (3455, 65, 3855, 65)

EXC. J56	386118	SM	3.08	1370722		386259	5467132 5467133	1368329
	386119	SO	3.23	1370723				
	386122	SU	3.55	1370654				
WITH J56	390101	SG	3.08	1370721		386259	5465562 5465563	1368329
	390102	TC	3.23	1370725				
	390103	TE	3.55	1370654				

LOCKING TYPE DIFFERENTIAL (EXC. 3455, 65, 3855, 65)

EQUIPMENT	AXLE ASSY	CODE	RATIO	AXLE SUB ASSY SHOWN ON CHART		SHAFT ASSY AXLE	BRAKE ASSY LH, RH	DRUM ASSY BRAKE
				BUICK 1369606	PONTIAC 9779792			
EXC. J56	386111	SB	2.78	1370716	9780025	385259	5467122 5467123	382306 OR 382307
	386112	SD	3.08	1370718				
	386112	SD	3.08		9779802			
	386113	SE	3.23		9779803			
	386116	SJ	3.55		9779805			
⊗	390114	TH	3.90		9779806			
WITH J56	390104	SL	2.78	1370716	9780025	385259	5465492 5465493	383829
	390105	SR	3.08	1370718				
	390105	SR	3.08		9779802			
	390106	SW	3.23		9779803			
	390107	SZ	3.55		9779805			
⊗	390115	TK	3.90		9779806			

LOCKING TYPE DIFFERENTIAL (3455, 65, 3855, 65)

EXC. J56	386124	SN	3.08	1370722		386259	5467132 5467133	1368329
	386125	SP	3.23	1370724				
	386128	SY	3.55	1370653				
WITH J56	390108	SH	3.08	1370722		386259	5465562 5465563	1368329
	390109	TD	3.23	1370724				
	390110	TF	3.55	1370653				

THE FOLLOWING LIST OF COMPONENT PARTS ARE REQUIRED FOR USE IN CONJUNCTION WITH A BUICK OR PONTIAC AXLE SUB-ASSEMBLY OF SELECTED RATIO FROM THE ABOVE CHARTS TO COMPLETE AXLE ASSEMBLY FOR USE ON PRODUCTION LINE OR ASSEMBLY PLANTS.

EXCEPT				
3455, 65	3455, 65			
3855, 65	3855, 65			
(**)	(**)	1	AXLE SUB ASSEMBLY	- REAR (SELECT RATIO FROM CHART)
SEE CHART		1	BRAKE ASSEMBLY	- REAR - L.
SEE CHART		1	BRAKE ASSEMBLY	- REAR - R.
1367324		2	GASKET	- BRAKE TO AXLE
9776221		*	GASKET	- BRAKE TO AXLE (OPT)
384944		*	GASKET	- BRAKE TO AXLE (OPT)
	1363330	4	GASKET	- BRAKE & BEARING RETAINER TO AXLE
9776453	414999	8	BOLT	- BRAKE TO AXLE
	1368360	*	BOLT	- BRAKE TO AXLE (OPT)
385186	385186	8	NUT	- BRAKE TO AXLE
SEE CHART		2	SHAFT ASSEMBLY	- REAR AXLE
SEE CHART		2	DRUM ASSEMBLY	- REAR BRAKE
358501	358501	4	NUT (ASSEMBLY PLANTS)	- DRUM TO AXLE
1365334		2	GASKET	- OUTER BEARING RETAINER
384939		*	GASKET	- OUTER BEARING RETAINER (OPT)
9774551		*	GASKET	- OUTER BEARING RETAINER (OPT)
387621	387621	2	CABLE ASSEMBLY	- REAR PARKING BRAKE
9416029	9416029	4	NUT (SPRING) (LANSING ONLY)	- DRUM TO AXLE
3820840	3820840	1	VENT ASSEMBLY	- REAR AXLE

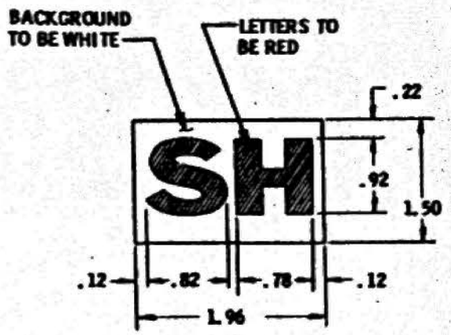

TYPICAL TAPE IDENTIFICATION

THIS REPRESENTS AXLE AS SHIPPED TO B.O.P. ASSEMBLY PLANT BY VENDOR OR AS FABRICATED BY OLDSMOBILE FOR LANSING PLANT. (**) PURCHASED FOR LANSING PLANT ONLY. FOR ASSEMBLY INFORMATION SEE 386279 MANUFACTURER'S IDENTIFICATION MUST APPEAR ON THIS PART. LOCATION TO BE APPROVED BY ENGINEERING DEPARTMENT. OMISSION REQUIRES APPROVAL OF PURCHASING DIVISION.

PRODUCTION SAMPLE TO BE TESTED AND APPROVED BY PRODUCT ENGINEERING FOR OLDSMOBILE PARTS.

DATE	SYM	REVISION	DR.	CK.	DATE	SYM	REVISION	DR.	CK.	DATE	SYM	REVISION	DR.	CK.
										9-17-64	Y6	AXLE ASS'YS ADDED		
										7-27-64	X	REVISED WAS "C" SIZE		

CHART — REAR AXLE ASSEMBLY

DATE OCTOBER 2, 1963
DR. BY JACQUI PERKINS
CHECKED BEDFORD
APPR. T.E. FERNAND
APPR. JOHN GUSTKE

FIRST USED 1965
Oldsmobile Service ILLUSTRATION
SERIES F-85
REV.
PAGE 4-5.1
PART NO. 386072

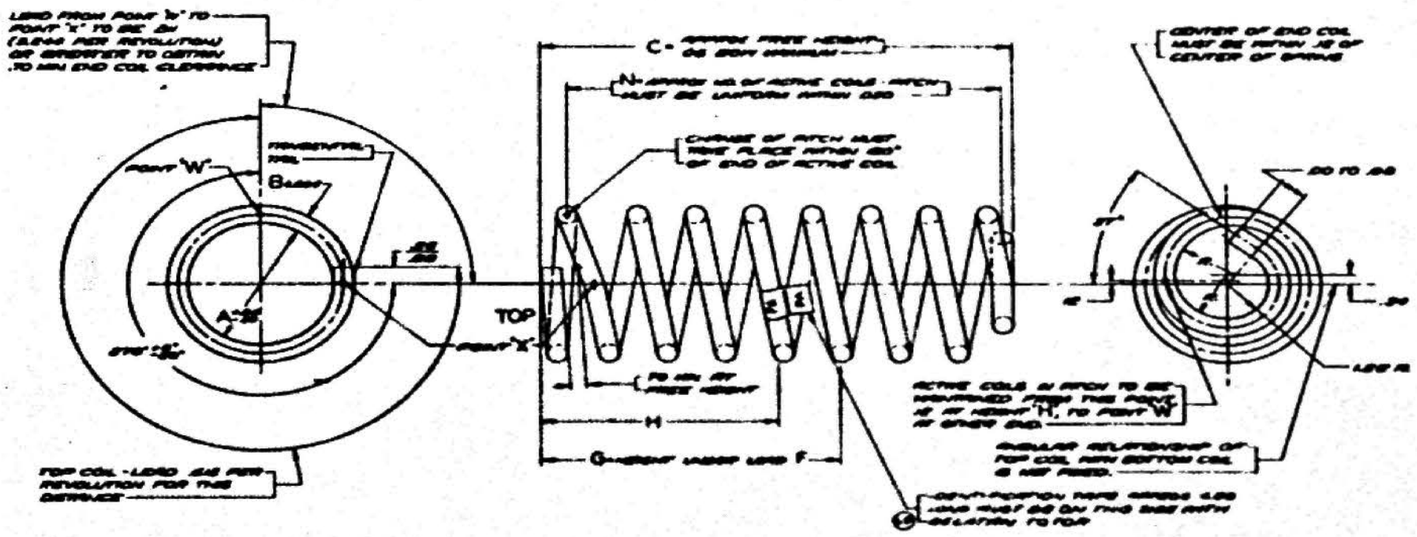

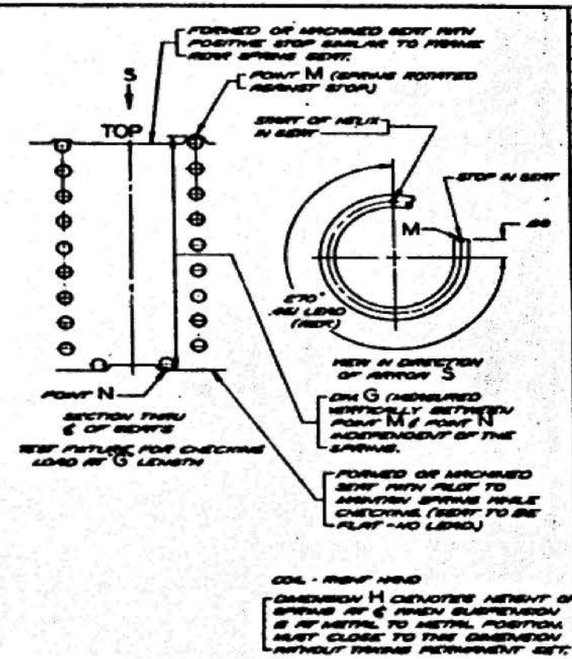

PART NUMBER	A	B	C	N	E	F	G	H	LETTER CODE IDENTIFICATION
9773806	5.50	.600	15.79	5.30	.150	1040-1065 1065-1090	8.52	4.92	
9773807	5.50	.560	16.79	5.82	.108	829-850 850-875	8.52	4.52	PA
9773808	5.50	.560	16.30	5.82	.108	775-800 800-825	8.52	4.52	PB
9773998	5.50	.530	14.89	4.73	.108	675-700 700-725	8.52	4.52	PC
9773999	5.50	.530	15.74	4.73	.108	715-740 740-765	8.52	4.52	PD
9774693	5.50	.610	16.44	5.65	.150	1140-1165 1165-1190	8.52	4.92	PE
9774694	5.50	.610	16.80	5.65	.150	1190-1215 1215-1240	8.52	4.92	PF
9774456	5.50	.560	13.12	3.66	.160	685-710 710-735	8.52	4.52	PG
9774455	5.50	.630	13.37	4.23	.225	1040-1065 1065-1090	8.52	4.92	PH
9775691	5.50	.560	15.81	5.14	.120	825-850 850-875	8.52	4.92	PI
9775692	5.50	.610	15.28	5.12	.165	1065-1090 1090-1115	8.52	4.92	PJ
9775963	5.50	.570	14.28	4.58	.144	780-805 805-830	8.52	4.92	PK
9776056	5.50	.570	14.82	4.56	.144	830-855 855-880	8.52	4.52	PL
9776057	5.50	.640	14.49	5.06	.200	1145-1170 1170-1195	8.52	4.52	PM
9776201	5.50	.540	13.65	4.40	.122	600-625 625-650	8.52	4.52	PN
9776627	5.50	.600	15.99	5.31	.150	1100-1125 1125-1150	8.52	4.92	PO

PART NUMBER	A	B	C	N	E	F	G	H	LETTER CODE IDENTIFICATION
9776243	.650	.620	13.95	4.48	.200	1040-1065 1065-1090	8.52	4.92	PP
9776244	5.50	.570	16.23	5.47	.120	875-900 900-925	8.52	4.52	PQ
9776245	5.50	.570	16.65	5.47	.120	925-950 950-975	8.52	4.52	PR
9776246	5.50	.630	16.74	5.94	.150	1265-1290 1290-1315	8.52	4.92	PS
9776360	5.50	.560	15.40	5.14	.120	775-800 800-825	8.52	4.92	PT
9776457	5.50	.530	14.89	4.72	.108	625-650 650-675	8.52	4.52	PU
9776458	5.50	.600	15.39	5.30	.150	990-1015 1015-1040	8.52	4.92	PV
9776427	5.93	.600	16.25	5.76	.138	1020-1045 1045-1070	8.52	4.92	PW
9779274	5.50	.590	13.44	4.40	.170	785-810 810-835	8.52	4.52	PX
9777074	5.50	.540	13.30	3.68	.144	600-625 625-650	8.52	4.92	PY
9781727	5.50	.530	15.34	4.35	.110	650-675 675-700	8.52	4.52	PZ
9781728	5.50	.530	14.88	4.35	.110	700-725 725-750	8.52	4.52	NA
9777431	5.50	.540	15.00	4.86	.115	695-720 720-745	8.52	4.52	NB

COIL - RIGHT HAND

DIMENSION H DENOTES HEIGHT OF SPRING AT ℄ RIGHT SUSPENSION & AT METAL TO METAL POSITION. MUST CLOSE TO THIS DIMENSION WITHOUT TAKING PERMANENT SET.

E - RATE PER INCH ± 5% WHEN CHECKED 100 ABOVE TO 100 BELOW HEIGHT G.

ONE PASS CENTERLESS GROUND HOT ROLLED STEEL WIRE OF GRADES LUNDE STEEL COMPANY'S PRECISION ROLLED (NOT SCRAPED) STEEL.

COIL SPRING AT 800°F AND QUENCH DIRECT IN OIL. WIRE MUST BE QUENCHED FIRST. TEMPER BRINELL 415-444, 2.70-2.99 MIN. OR OF REFRESSION.

SHOT PEEN AFTER HEAT TREATMENT AND BEFORE PRESETTING AND TESTING. USE #28 ROUND STEEL SHOT.

SPRING MUST SHOW ENTIRE SURFACE COVERAGE AFTER PEENING OPERATION.

COAT SPRINGS WITH A CLEAR OPTIONAL RUST PREVENTIVE OIL. COATED PART MUST WITHSTAND 96 HOURS AT 100% HUMIDITY WITHOUT RUSTING. OPTIONAL FINISH: PAINT PER ES-21

BEFORE CHECKING LOAD AND RATE, PRELOAD SPRING TO H AND RELEASE IMMEDIATELY TO THE FREE HEIGHT.

SPRING IDENTIFICATION: SPRINGS ARE TO BE IDENTIFIED BY PART NUMBERS / LETTER CODE PRINTED ON CHANGE TAGS. LOW LOAD RANGE SPRING TO HAVE A CIRCLE AROUND THE CODE LETTERS. (REFERENCE 9779840 INSTRUCTION DRAWING)

SERVICE: YELLOW TAPE WITH BLACK PART NUMBERS MAY BE USED.

9773805

	NONE	RETTIGEN
		R.E.C.

9773805

F-85

OLDSMOBILE DIVISION
GENERAL MOTORS CORPORATION
LANSING, MICHIGAN

REAR SUSPENSION SPRING USAGE - 1965 F-85

		SM-FS TRANS		JETAWAY TRANS	SM-FS & JETAWAY TRANS				
SERIES	MODEL	4 B STD CAR		M 33	35W29 POLICE	97F74 & 98F74 EXPORT (ALL)	35801 POLICE	35807 POLICE	681 TRAILER HAULING
33300 (V8)	27	9773999 PD		9773999 PD	NA	9775691 PI	9777817 NC	9777817 NC	9776056 PL
	69	9773807 PA		9773807 PA	NA	9776244 PQ	9777817 NC	9777817 NC	9776056 PL
	35	9775927 PO		9775927 PO	NA	9775692 PJ	9774465 PH	NA	9774694 PF
33400 (V8)	27	9775691 PI		9773999 PD	9777817 NC	9775691 PI	9777817 NC	9777817 NC	9776056 PL
	35	9775927 PO		9775927 PO	NA	9775692 PJ	9774465 PH	NA	9774694 PF
	55	9774693 PE		9774693 PE	NA	9774693 PE	9774465 PH	NA	9774694 PF
	65	9774694 PF		9774694 PF	NA	9776246 PS	9774465 PH	NA	9776246 PS
	69	9775691 PI		9773808 PB	NA	9775691 PI	9777817 NC	9777817 NC	9776056 PL
33500 (V8)	27	9773999 PD		9773999 PD	NA	9775691 PI	9777817 NC	9777817 NC	9776056 PL
	35	9775927 PO		9775927 PO	NA	9775692 PJ	9774465 PH	NA	9774694 PF
	69	9773807 PA		9773807 PA	NA	9776244 PQ	9777817 NC	9777817 NC	9776056 PL
33600 (V8)	35	9775927 PO		9775927 PO	NA	9775692 PJ	9774465 PH	NA	9774694 PF
	69	9775691 PI		9773808 PB	NA	9775691 PI	9777817 NC	9777817 NC	9776056 PL
33800 (V8)	27	9775691 PI		9773999 PD	9777817 NC	9775691 PI	9777817 NC	NA	9776056 PL
	37	9775691 PI		9773999 PD	9777817 NC	9775691 PI	9777817 NC	NA	9776056 PL
	55	9774693 PE		9774693 PE	NA	9774693 PE	9774465 PH	NA	9774694 PF
	65	9774694 PF		9774694 PF	NA	9776246 PS	9774465 PH	NA	9776246 PS
	67	9775691 PI		9773999 PD	9777817 NC	9775691 PI	NA	NA	9776056 PL

SPRINGS SHOULD BE USED EITHER LOW RANGE ON BOTH SIDES OF CAR OR HIGH RANGE ON BOTH SIDES OF CAR.

TAPE IDENTIFICATION:
HIGH LOAD RANGE - PLAIN IDENTIFICATION
LOW LOAD RANGE - BLACK CIRCLE AROUND CODE LETTER

4-62

DO NOT SCALE
DEC 16, 1965 — RACHTERHOF — BEDFORD
1965
CHART-REAR SPRING USAGE
F-AP C 387537
387537 SHEET 1 OF 1
GRP. 40

OLDSMOBILE DIVISION GENERAL MOTORS CORPORATION LANSING — MICHIGAN

REAR AXLE	RELEASE GROUP	ENGINE USAGE (CUBIC INCHES, CYLINDERS, CARBURETOR, COMPRESSION) 225 V-6 1 BBL. LOW	330 V-8 2 BBL. LOW	330 V-8 4 BBL. LOW	330 V-8 4 BBL. HIGH	400 V-8 4 BBL. HIGH	TRANSMISSION USAGE 3 SPEED SMT	4 SPEED WIDE RATIO	4 SPEED CLOSE RATIO	JETAWAY	AXLE RATIO USED ON MODEL 33300 STANDARD 27, 35, 69	33400 STANDARD 27, 35, 69	33400 STANDARD 55, 65	33500 DELUXE 27, 35, 69	33600 DELUXE 35, 69	33800 CUTLASS 27, 37, 67	33800 CUSTOM 55, 65
STANDARD	4A-1	S					S	M-20			3.23	N.A.	N.A.	3.23	N.A.	N.A.	N.A.
STANDARD	4A-1		S				S	M-20			N.A.	3.08	3.23	N.A.	3.08	N.A.	3.23
STANDARD	4A-1				S		S	M-20			N.A.			N.A.		3.23	
STANDARD	M-33	S								(B) M-33 M-34	3.08			3.08			
STANDARD	M-33		S							(B) M-33 M-34		2.78	3.08		2.78		3.08
STANDARD	M-33				S					(B) M-33 M-34						3.08	
442 PERFORMANCE PACKAGE	W-29					L-78	M-13	N.A.	M-21		N.A.	3.55	N.A.	N.A.	N.A.	3.55	N.A.
442 PERFORMANCE PACKAGE	W-29					L-78				M-32	N.A.	3.23	N.A.	N.A.	N.A.	3.23	N.A.
LOW COMPRESSION ENG.	4A-1	L-65					S	M-20			N.A.	(C) 3.23	N.A.	N.A.	(C) 3.23	3.23	N.A.
LOW COMPRESSION ENG.	M-33	L-65								(B) M-33 M-34	N.A.	(C) 3.08	(C) 3.08	N.A.	(C) 3.08	3.08	N.A.
HIGH COMPRESSION ENG.	4A-1	L-74					S	M-20			N.A.	3.23	3.23	N.A.	3.23	S	3.23
HIGH COMPRESSION ENG.	M-33	L-74								(B) M-33 M-34	N.A.	3.08	3.08	N.A.	3.08	S	3.08
AIR CONDITIONING	C-60	THE ABOVE USAGE IS THE SAME FOR AIR CONDITIONED CARS.															

NOTES: AXLE - TRANSMISSION COMBINATION

3 SPEED SM - 3.08, 3.23, 3.55, 3.90, 4.11, 4.33
4 SPEED WIDE RATIO (M-20) 3.08, 3.23
4 SPEED CLOSE RATIO (M-21) 3.55, 3.90, 4.11, 4.33
V-6 JETAWAY 3.08, 3.23, 3.55, 3.90
V-8 JETAWAY 2.78, 3.08, 3.23, 3.55, 3.90, 4.11, 4.33

1. AVAILABLE ALL EXCEPT 33867 MODELS
2. AVAILABLE ALL EXCEPT 33335, 33535, 33635 MODELS

S - STANDARD
N.A. - NOT AVAILABLE
N.R. - NOT RECOMMENDED USAGE

(D) SHEET 1 OF 3

DATE	SYM	REVISION	DR.	CK.	DATE	SYM	REVISION	DR.	CK.	DATE	SYM	REVISION	DR.	CK.
										6-4-65	D	WAS SHEET 1 OF 2	CB	CA
										5-20-65	C	WAS NOT AVAILABLE	CB	CA
										5-20-65	B	M-34 ADDED	CB	CA
										11-6-64	A	FORMAT REVISED	CG	CA

INSTALLATION CHART - REAR AXLE USAGE
DATE NOV 2, 1964
DR. BY GALE GRAY
CHECKED R. PIERCE
APPR. R.C. STEIAEL
APPR.
FIRST USED 1965
Oldsmobile Service ILLUSTRATION
SERIES F-85
REF.
PAGE 4-7.1
PART NO. 388099

OLDSMOBILE DIVISION GENERAL MOTORS CORPORATION LANSING — MICHIGAN

REAR AXLE	RELEASE GROUP	ENGINE USAGE (CUBIC INCHES, CYLINDERS, CARBURETOR, COMPRESSION) 225 V-6 1 BBL. LOW	330 V-8 2 BBL. LOW	330 V-8 4 BBL. LOW	330 V-8 4 BBL. HIGH	400 V-8 4 BBL. HIGH	TRANSMISSION USAGE 3 SPEED SMT	4 SPEED WIDE RATIO	4 SPEED CLOSE RATIO	JETAWAY	AXLE RATIO USED ON MODEL 33300 STANDARD 27, 35, 69	33400 STANDARD 27, 35, 69	33400 STANDARD 55, 65	33500 DELUXE 27, 35, 69	33600 DELUXE 35, 69	33800 CUTLASS 27, 37, 67	33800 CUSTOM 55, 65
STANDARD	4A-1	S					S	M-20			3.23	N.A.	N.A.	3.23	N.A.	N.A.	N.A.
STANDARD	4A-1		S				S	M-20			N.A.	3.08	3.23	N.A.	3.08	N.A.	3.23
STANDARD	4A-1				S		S	M-20			N.A.			N.A.		3.23	
STANDARD	M-33	S								M-33	3.08			3.08			
STANDARD	M-33		S							M-33		2.78	3.08		2.78		3.08
STANDARD	M-33				S					M-33						3.08	
442 PERFORMANCE PACKAGE	W-29					L-78	M-13	N.A.	M-21		N.A.	3.55	N.A.	N.A.	N.A.	3.55	N.A.
442 PERFORMANCE PACKAGE	W-29					L-78				M-32	N.A.	3.23	N.A.	N.A.	N.A.	3.23	N.A.
LOW COMPRESSION ENG.	4A-1			L-65			S	M-20			N.A.	N.A.	N.A.	N.A.	N.A.	3.23	N.A.
LOW COMPRESSION ENG.	M-33			L-65						M-33	N.A.	N.A.	N.A.	N.A.	N.A.	3.08	N.A.
HIGH COMPRESSION ENG.	4A-1				L-74		S	M-20			N.A.	3.23	3.23	N.A.	3.23	S	3.23
HIGH COMPRESSION ENG.	M-33				L-74					M-33	N.A.	3.08	3.08	N.A.	3.08	S	3.08
AIR CONDITIONING	C-60	THE ABOVE USAGE IS THE SAME FOR AIR CONDITIONED CARS.															

NOTES: AXLE - TRANSMISSION COMBINATION

3 SPEED SM - 3.08, 3.23, 3.55, 3.90, 4.11, 4.33
4 SPEED WIDE RATIO (M-20) 3.08, 3.23
4 SPEED CLOSE RATIO (M-21) 3.55, 3.90, 4.11, 4.33
V-6 JETAWAY 3.08, 3.23, 3.55, 3.90
V-8 JETAWAY 2.78, 3.08, 3.23, 3.55, 3.90, 4.11, 4.33

1. AVAILABLE ALL EXCEPT 33867 MODELS
2. AVAILABLE ALL EXCEPT 33335, 33535, 33635 MODELS

S - STANDARD
N.A. - NOT AVAILABLE
N.R. - NOT RECOMMENDED USAGE

DATE	SYM	REVISION	DR.	CK.	DATE	SYM	REVISION	DR.	CK.	DATE	SYM	REVISION	DR.	CK.
										11-6-64	A	FORMAT REVISED	GGA	

INSTALLATION CHART - REAR AXLE USAGE

DATE NOV 2, 1964
DR. BY GALE GRAY
CHECKED R PIERCE
APPR. R.C. STEINKE
APPR.

FIRST USED 1965 | Oldsmobile Service Illustration | PAGE 4-7.1
SERIES F-85 | REF. | PART NO. 388099

OLDSMOBILE DIVISION GENERAL MOTORS CORPORATION LANSING — MICHIGAN

REAR AXLE	RELEASE GROUP	ENGINE USAGE (CUBIC INCHES, CYLINDERS, CARBURETOR, COMPRESSION) 225 V-6 1 BBL LOW	330 V-8 2 BBL LOW	330 V-8 4 BBL LOW	330 V-8 4 BBL HIGH	400 V-8 4 BBL HIGH	TRANSMISSION USAGE 3 SPEED SMT	4 SPEED WIDE RATIO	4 SPEED CLOSE RATIO	JETAWAY	AXLE RATIO USED ON MODEL 33300 STANDARD 27,35,69	33400 STANDARD 27,35,69	33400 STANDARD 55,65	33500 DELUXE 27,35,69	33600 DELUXE 35,69	33800 CUTLASS 27,37,67	33800 CUSTOM 55,65
POLICE-CITY	B-01	S	S		S		S	M-20		(C) M-33 M-34	S	S	S	S	S	S (1)	S
POLICE-CITY	B-01				L-76		S	M-20			N.A.	3.23	3.23	N.A.	3.23	3.23 (1)	3.23
POLICE-CITY	B-01				L-76					M-34	N.A.	3.23	3.23	N.A.	3.23	3.23 (1)	3.23
POLICE-CITY	B-01					L-77	S	N.A.	M-21		N.A.	3.55	N.A.	N.A.	3.55	3.55 (1)	N.A.
POLICE-CITY	B-01					L-77				M-32	N.A.	3.23	N.A.	N.A.	3.23	3.23 (1)	N.A.
POLICE-HIGHWAY	B-07	S	S				S	M-20			S (2)	S	N.A.	S (2)	S (2)	N.A.	N.A.
POLICE-HIGHWAY	B-07				L-76		S	M-20			N.A.	3.23	N.A.	N.A.	3.23 (2)	N.A.	N.A.
POLICE-HIGHWAY	B-07				L-76					M-34	N.A.	3.23	N.A.	N.A.	3.23 (2)	N.A.	N.A.
POLICE-HIGHWAY	B-07					L-77	S	N.A.	M-21		N.A.	3.55	N.A.	N.A.	3.55 (2)	N.A.	N.A.
POLICE-HIGHWAY	B-07					L-77				M-32	N.A.	3.23	N.A.	N.A.	3.23 (2)	N.A.	N.A.
PERFORMANCE (LIGHT TRAILER HAULING)	G-91	S	S	L-65	L-76 L-74 S		(D) S	M-20	N.A.	M-33 M-34	3.23	3.23	3.23	3.23	3.23	3.23	3.23
PERFORMANCE (HEAVY TRAILER HAULING)	G-93	S	S	L-65	S L-74 L-76	L-77 L-78	S	N.A.	M-21	M-32 M-33 M-34	3.55	3.55	3.55	3.55	3.55	3.55	3.55
PERFORMANCE	G-94	S	S	L-65	L-76 L-74 S	L-77 L-78	S	N.A.	M-21	M-32 M-33 M-34	3.90	3.90	N.A.	3.90	3.90	3.90	N.A.
PLAINS	G-95	N.A.	S	L-65	L-76 L-74 S	N.A.				(C) M-33 M-34	N.A.	2.78	N.A.	N.A.	2.78	2.78	N.A.
LOCKING	G-80	ALL OF THE ABOVE COMBINATIONS ARE DUPLICATED FOR LOCKING-TYPE ANTI-SPIN AXLES. - ON BOTH SHT. 1 & 2															
DEALER INSTALLED PERFORMANCE	90-4		S	L-65	S	L-77 L-78	S	N.A.	M-21	M-32 M-33 M-34	N.R.	4.11 4.33	N.R.	N.A.	N.R.	4.11 4.33	N.R.

NOTES: AXLE - TRANSMISSION COMBINATION

3 SPEED SM - 3.08, 3.23, 3.55, 3.90, 4.11, 4.33
4 SPEED WIDE RATIO (M-20) 3.08, 3.23
4 SPEED CLOSE RATIO (M-21) 3.55, 3.90, 4.11, 4.33
V-6 JETAWAY 3.08, 3.23, 3.55, 3.90
V-8 JETAWAY 2.78, 3.08, 3.23, 3.55, 3.90, 4.11, 4.33

S - STANDARD
N.A. - NOT AVAILABLE
N.R. - NOT RECOMMENDED USAGE

(1) AVAILABLE ALL EXCEPT 33867 MODELS
(2) AVAILABLE ALL EXCEPT 33335, 33535, 33635 MODELS (E)

SHEET 2 OF 3

DATE	SYM	REVISION	DR.	CK.
6-14-65	E	WAS SHEET 2 OF 2	CG	JA
6-10-65	D	CODES ADDED	JJ	NG
5-28-65	C	M-34 ADDED	CG	JA
11-6-64	B	L-74 & L-76 USAGE ADDED	CG	JA
11-6-64	A	FORMAT REVISED	CG	JA

INSTALLATION CHART - REAR AXLE USAGE

DATE NOV. 2, 1964
DR. BY GALE GRAY
CHECKED R. PIERCE
APPR. R.C. STEMPEL
APPR.

FIRST USED 1965
Oldsmobile chart ILLUSTRATION
SERIES F-85
REV.
PAGE 4-7.2
PART NO. 388099

OLDSMOBILE DIVISION

GENERAL MOTORS CORPORATION
LANSING — MICHIGAN

STD. TYPE DIFFERENTIAL (EXC. 3455, 65, 3855, 65)

EQUIPMENT	AXLE ASSY	CODE	RATIO	GEARS	AXLE SUB ASSY SHOWN ON CHART		SHAFT ASSY AXLE	BRAKE ASSY LH, RH	DRUM ASSY BRAKE
					BUICK 1369606	PONTIAC 9779792			
EXC. J56	386104	SA	2.78	39-14	1370715	9780022	385259 (D)(G)	5467122 5467123	382306 OR 382307
	386105	SC	3.08	40-13	1370717	9779795			
	386106	SE	3.23	42-13		9779796			
	386110	SI	3.55	39-11		9779798			
	390712	TG	3.90	39-10		9779799			
WITH J56	390057	SK	2.78	39-14	1370715	9780022	385259 (D)(G)	5465492 5465493	383829
	390058	SQ	3.08	40-13	1370717	9779795			
	390059	SV	3.23	42-13		9779796			
	390060	SX	3.55	39-11		9779798			
	390713	TJ	3.90	39-10		9779799			

STD. TYPE DIFFERENTIAL (3455, 65, 3855, 65)

EXC. J56	386118	SM	3.08	40-13	1370721		386259 (D)(F)	5467132 5467133	1368329
	386119	SO	3.23	42-13	1370723				
	386122	SU	3.55	39-11	1370654				
WITH J56	390101	SG	3.08	40-13	1370721		386259 (D)(F)	5465562 5465563	1368329
	390102	TC	3.23	42-13	1370723				
	390103	TE	3.55	39-11	1370654				

LOCKING TYPE DIFFERENTIAL (EXC. 3455, 65, 3855, 65)

EQUIPMENT	AXLE ASSY	CODE	RATIO	GEARS	AXLE SUB ASSY SHOWN ON CHART		SHAFT ASSY AXLE	BRAKE ASSY LH, RH	DRUM ASSY BRAKE
					BUICK 1369606	PONTIAC 9779792			
EXC. J56	386111	SB	2.78	39-14	1370716	9780025	385259 (D)(G)	5467122 5467123	382306 OR 382307
	386112	SD	3.08	40-13	1370718	9779802			
	386113	SF	3.23	42-13		9779803			
	386116	SJ	3.55	39-11		9779805			
	390714	TH	3.90	39-10		9779806			
WITH J56	390104	SL	2.78	39-14	1370716	9780025	385259 (D)(G)	5465492 5465493	383829
	390105	SR	3.08	40-13	1370718	9779802			
	390106	SW	3.23	42-13		9779803			
	390107	SZ	3.55	39-11		9779805			
	390715	TK	3.90	39-10		9779806			

LOCKING TYPE DIFFERENTIAL (3455, 65, 3855, 65)

EXC. J56	386124	SN	3.08	40-13	1370722		386259 (D)(F)	5467132 5467133	1368329
	386125	SP	3.23	42-13	1370724				
	386128	SY	3.55	39-11					
WITH J56	390108	SH	3.08	40-13	1370722		386259 (D)(F)	5465562 5465563	1368329
	390109	TD	3.23	42-13	1370724				
	390110	TF	3.55	39-11	1370653				

THE FOLLOWING LIST OF COMPONENT PARTS ARE REQUIRED FOR USE IN CONJUNCTION WITH A BUICK OR PONTIAC AXLE SUB-ASSEMBLY OF SELECTED RATIO FROM THE ABOVE CHARTS TO COMPLETE AXLE ASSEMBLY FOR USE ON PRODUCTION LINE OR ASSEMBLY PLANTS.

EXCEPT 3455, 65 3855, 65 (**)	EXCEPT 3455, 65 3855, 65 (**)			
		1	AXLE SUB ASSEMBLY	- REAR (SELECT RATIO FROM CHART)
SEE CHART		1	BRAKE ASSEMBLY	- REAR - L
SEE CHART		1	BRAKE ASSEMBLY	- REAR - R
1367324		2	GASKET	- BRAKE TO AXLE
9776221		•	GASKET	- BRAKE TO AXLE (OPT)
384944		•	GASKET	- BRAKE TO AXLE (OPT)
	1368330	4	GASKET	- BRAKE & BEARING RETAINER TO AXLE
9776453	414999	8	BOLT	- BRAKE TO AXLE
	1368360	•	BOLT	- BRAKE TO AXLE (OPT)
385186	385186	8	NUT	- BRAKE TO AXLE
SEE CHART		2	SHAFT ASSEMBLY	- REAR AXLE
SEE CHART		2	DRUM ASSEMBLY	- REAR BRAKE
358501	358501	4	NUT (ASSEMBLY PLANTS)	- DRUM TO AXLE
1365334		2	GASKET	- OUTER BEARING RETAINER
384939		•	GASKET	- OUTER BEARING RETAINER (OPT)
9774551		•	GASKET	- OUTER BEARING RETAINER (OPT)
387621	387621	2	CABLE ASSEMBLY	- REAR PARKING BRAKE
9416029	9416029	4	NUT (SPRING) (LANSING ONLY)	- DRUM TO AXLE
*** 3820840	3820840	1	VENT ASSEMBLY	- REAR AXLE

*** VENT ASSEMBLY 3820840 (C) SUPPLIED AND INSTALLED BY BOP AND LANSING AT FINAL ASSEMBLY. REMOVE AND DISCARD SHIPPING PLUG 544116 INSTALLED BY AXLE VENDOR.

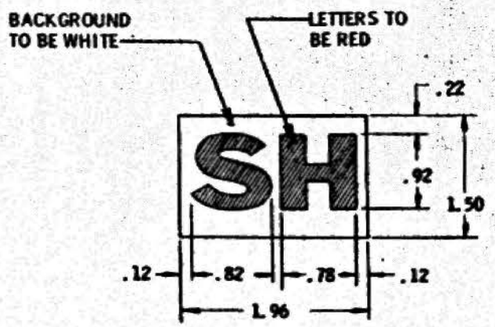

TYPICAL TAPE IDENTIFICATION

THIS REPRESENTS AXLE AS SHIPPED TO B.O.P. ASSEMBLY PLANT BY VENDOR OR AS FABRICATED BY OLDSMOBILE FOR LANSING PLANT. (**) PURCHASED FOR LANSING PLANT ONLY. FOR ASSEMBLY INFORMATION, SEE 386279 MANUFACTURER'S IDENTIFICATION MUST APPEAR ON THIS PART. LOCATION TO BE APPROVED BY ENGINEERING DEPARTMENT. OMISSION REQUIRES APPROVAL OF PURCHASING DIVISION.

PRODUCTION SAMPLE TO BE TESTED AND APPROVED BY PRODUCT ENGINEERING FOR OLDSMOBILE PARTS

(H) SHEET 3 OF 3

DATE	SYM	REVISION	DR.	CK.	DATE	SYM	REVISION	DR.	CK.
					1-5-65	E	WAS SJ		
					1-5-65	G	OPTIONS ADDED		
[illegible]	H	SHEET 3 OF 3 ADDED	CG	[illegible]	[illegible]	C	NOTE ADDED		
[illegible]	G	385022 REMOVED		[illegible]	[illegible]	B	WAS TE		
[illegible]	F	386223 REMOVED		[illegible]	[illegible]	A	WAS SE		

CHART — REAR AXLE USAGE

DATE NOV. 23, 1964
DR. BY R.R. STANLAKE
CHECKED J.N. AMES
APPR.
APPR.

FIRST USED 1965
SERIES F-85
REF. 386072 4-5.1
PAGE 4-7.3
PART NO. 388099

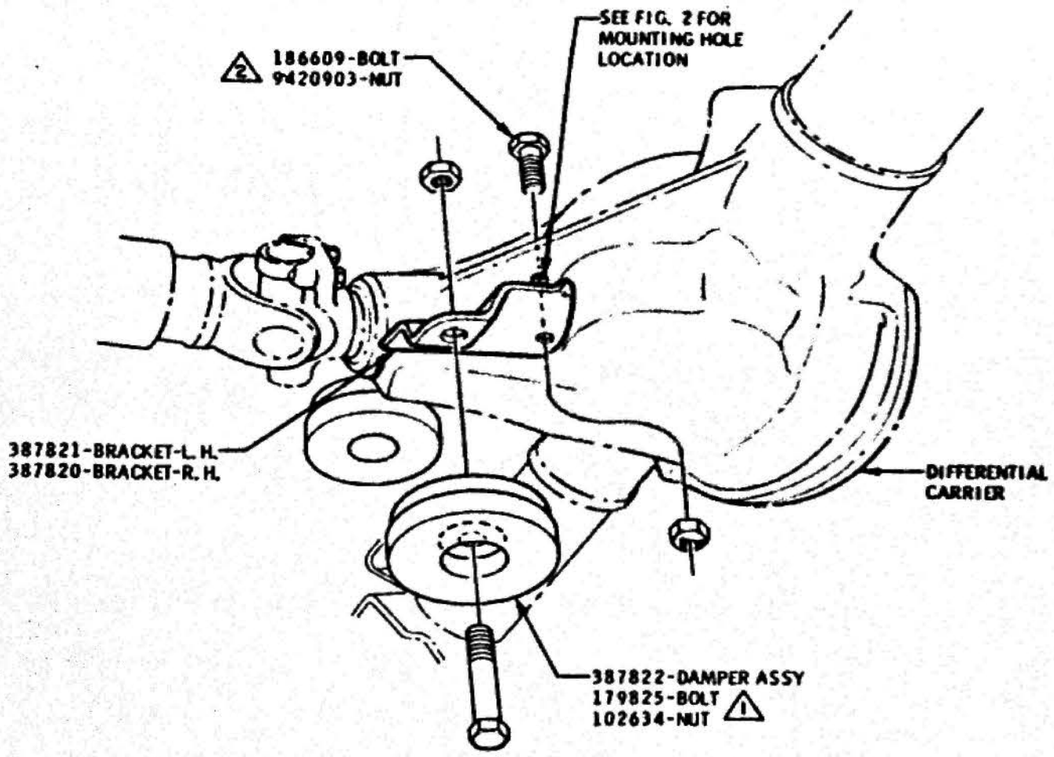

FIGURE 1

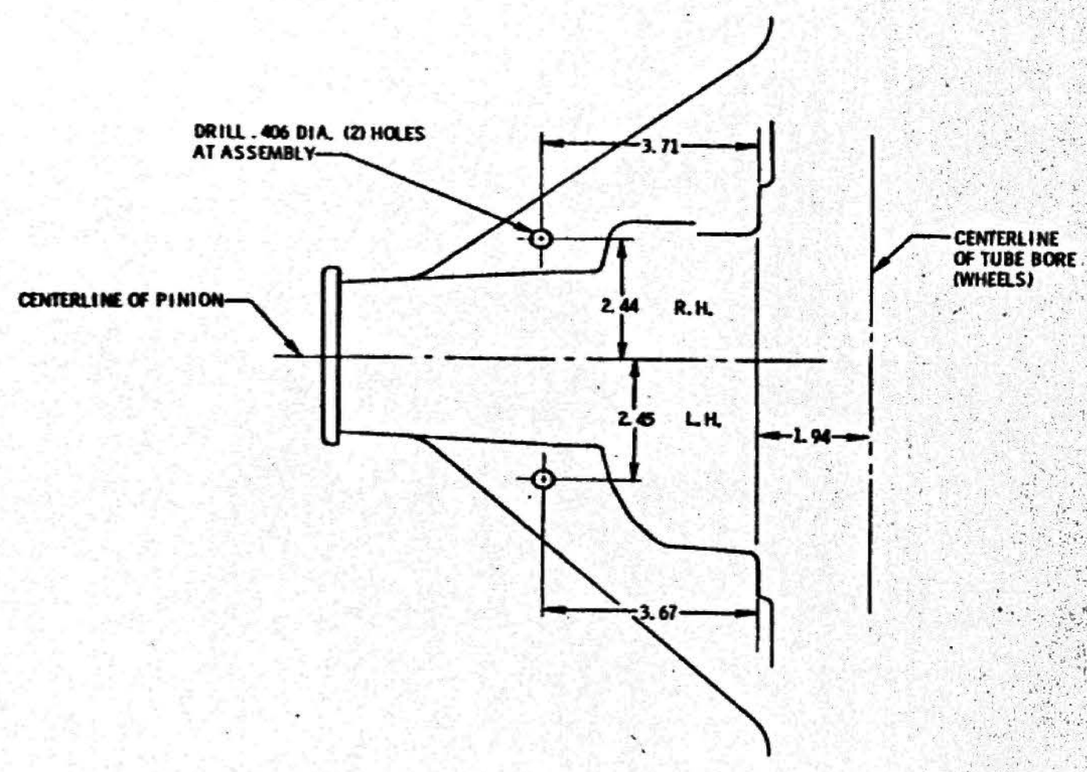

FIGURE 2

1 14-20 FT. LBS.
2 25-35 FT. LBS.

THIS DRAWING FOR USE WITH BUICK DIFF. CARRIERS ONLY

DATE	SYM	REVISION	DR.	CK.	DATE	SYM	REVISION	DR.	CK.	DATE	SYM	REVISION	DR.	CK.

INSTALLATION — DIFFERENTIAL DAMPER-EXTENDED WAGONS

DATE APRIL 20, 1964
DR. BY W.E. MASON
CHECKED
APPR.
APPR.

FIRST USED 1965 — Oldsmobile Service ILLUSTRATION — PAGE 4-8.1

SERIES F-85 — REF. XE-77472 — PART NO. 388837

BRAKE CONTROL

DRAWING NO.	DRAWING NAME	PAGE NO.
387270	BRAKE CONTROL	5 - 2.1

NOTE:
1. BRAKE HOSE MUST BE CONNECTED SECURELY IN PLACE AT WHEEL CYLINDER.
2. BEFORE MAKING HOSE CONNECTION AT FRAME, WHEELS MUST BE IN STRAIGHT AHEAD POSITION.

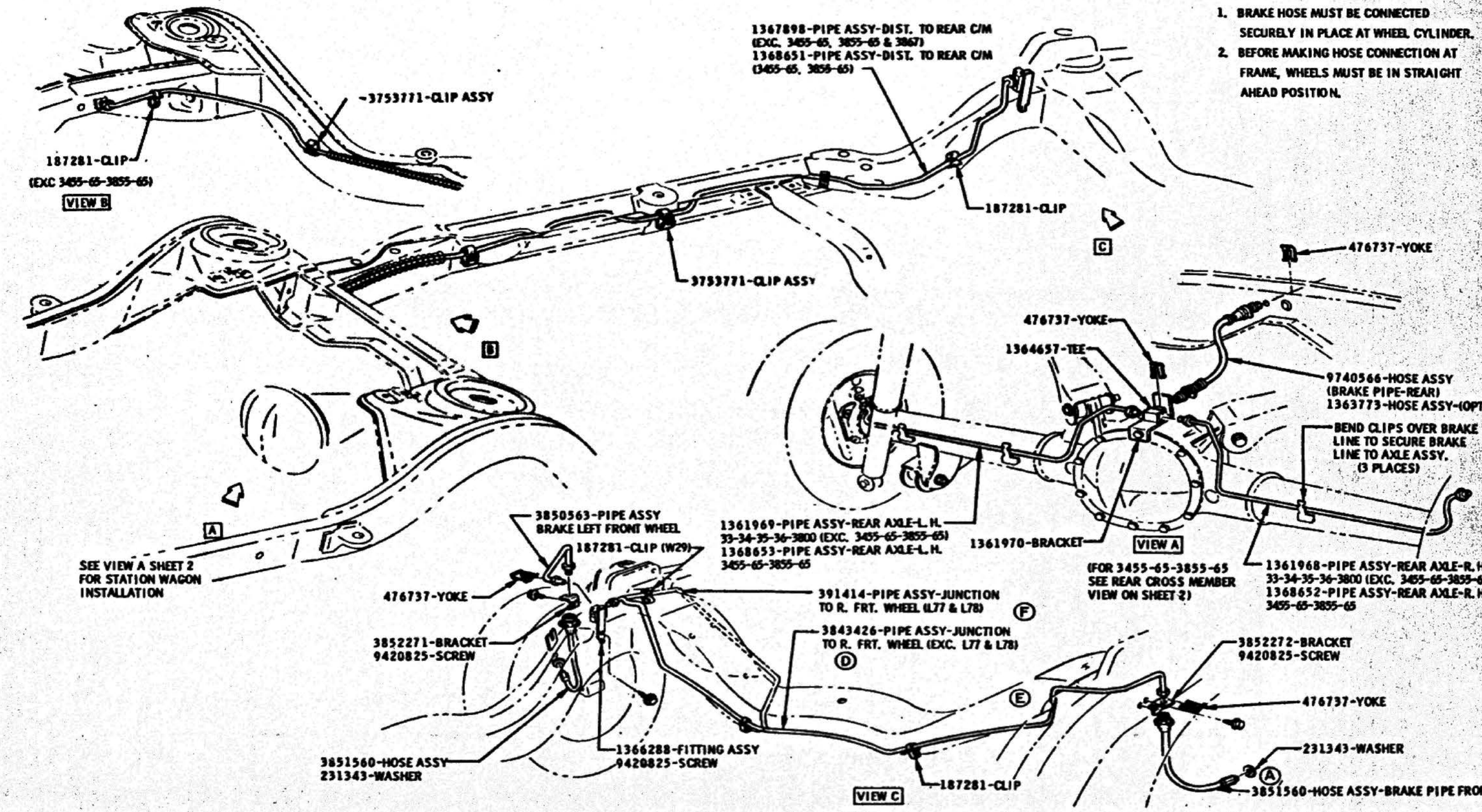

DATE	SYM	REVISION	DR.	CK.	DATE	SYM	REVISION	DR.	CK.	DATE	SYM	REVISION	DR.	CK.
										9-8-64	E	CLIP REMOVED		
										8-27-64	D	W29 PIPE ADDED PICTORIALLY		
										8-14-64	C	V8E OPT. REMOVED		
										6-25-64	B	9775425 ADDED		
					12-1-64	F	391414 WAS 9775425			5-18-64	A	WAS 9741711 & 1363778		

INSTALLATION	BRAKE CONTROL		
DATE JAN. 30, 1964	FIRST USED 1965	Oldsmobile GRAPHIC ILLUSTRATION	PAGE 5-2.1
DR. BY PIONEER TECH. DATA	SERIES F85	REF. 5F	PART NO. 387270
CHECKED D. TITUS			
APPR.			
APPR.			

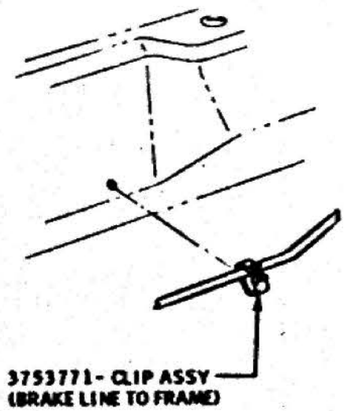

VIEW D
(3867)

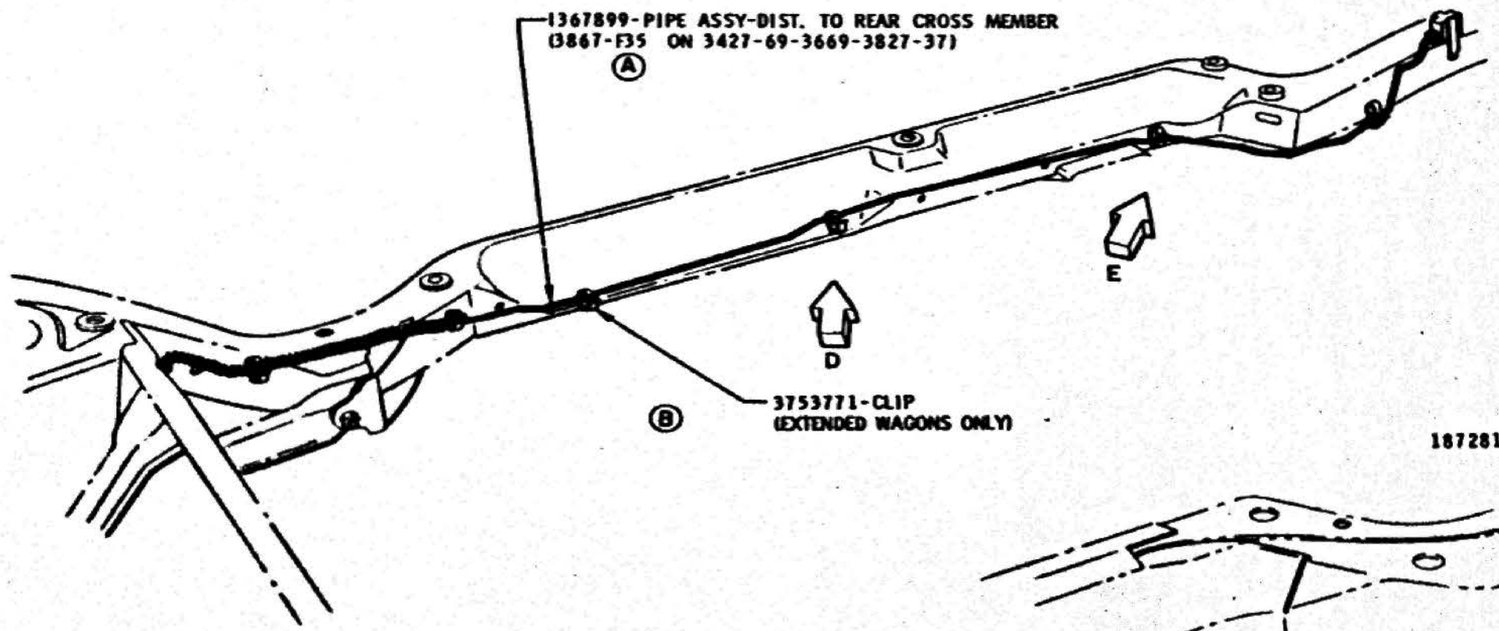

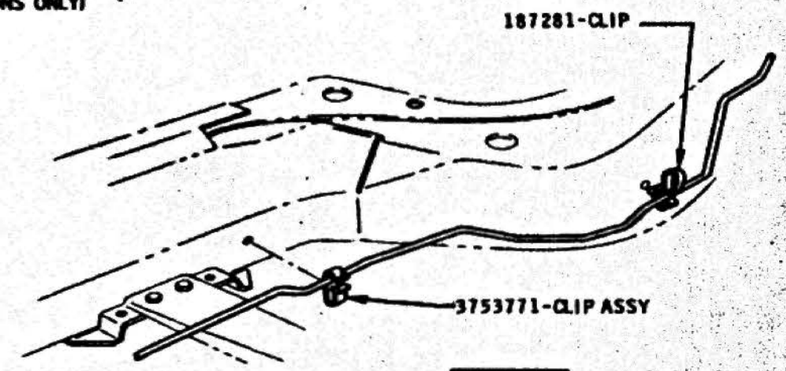

VIEW E
(3867)

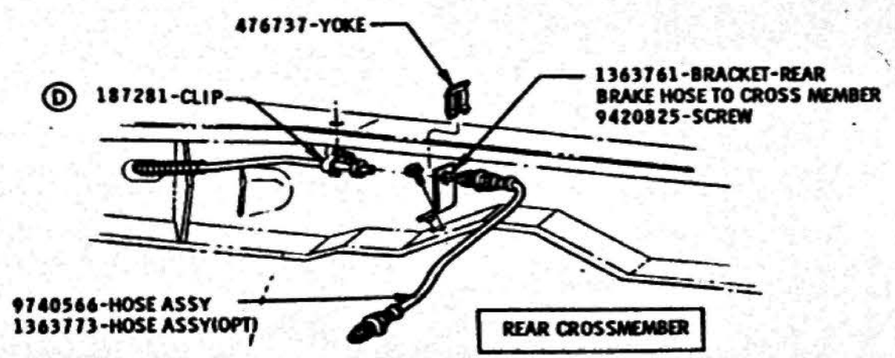

VIEW A

REAR CROSSMEMBER
(3455-65-3855-65)

NOTE:

1. BRAKE HOSE MUST BE CONNECTED SECURELY IN PLACE AT WHEEL CYLINDER.
2. BEFORE MAKING HOSE CONNECTION AT FRAME, WHEELS MUST BE IN STRAIGHT AHEAD POSITION.

DATE	SYM	REVISION	DR.	CK.	DATE	SYM	REVISION	DR.	CK.	DATE	SYM	REVISION	DR.	CK.
										5-6-65	D	WAS 3753771-CLIP		
										3-6-65	C	VIEW B REMOVED		
										3-6-65	B	VIEW, REVISED & REDRAWN		
										5-26-64	A	F35 WAS V82		

INSTALLATION **BRAKE CONTROL**

DATE JAN. 30, 1964
DR. BY PIONEER TECH DATA
CHECKED D. TITUS
APPR.
APPR.

FIRST USED 1965

Oldsmobile GRAPHIC ILLUSTRATION

PAGE 5-2.2

SERIES F85

REF. SF

PART NO. 387270

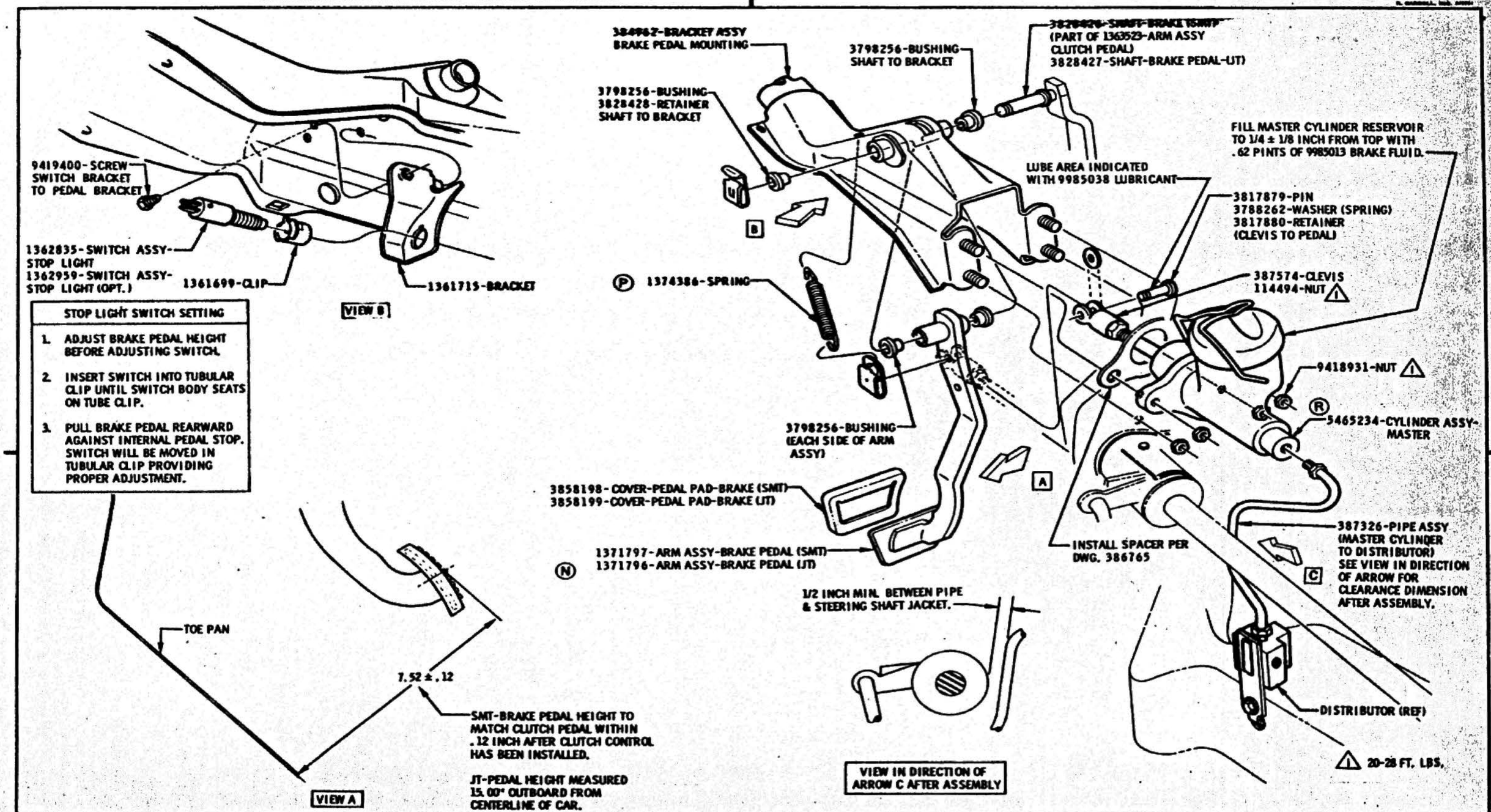

DATE	SYM	REVISION	DR.	CK.	DATE	SYM	REVISION	DR.	CK.	DATE	SYM	REVISION	DR.	CK.
2-15-65	R	5465239 WAS 5465894	BS		7-31-64	K	1362959 OPT. ADDED			9-31-64	E	VIEW ADDED		
12-9-64	P	1374386 WAS 1365198	LE		7-1-64	J	TORQUE SPEC. ADDED	BS		3-31-64	D	WAS 1366287		
12-9-64	N	1371796 WAS 1361711	LE		5-26-64	H	9419400 WAS 1361748	WM		3-14-64	C	WAS 5465234		
12-9-64	M	1371797 WAS 1361712	LE		3-31-64	G	WAS 1363630	RA		3-14-64	B	WAS 124925		
11-27-64	L	NOTES ADDED	BS		3-31-64	F	WAS 1363611	RA		3-14-64	A	WAS 104098		

INSTALLATION — BRAKE CONTROL (MANUAL)

DATE JAN. 20, 1964
DR. BY R. ACHTERHOF
CHECKED D. TITUS
APPR.
APPR.

FIRST USED 1965 — Oldsmobile GRAPHIC ILLUSTRATION — PAGE 5-2.3

SERIES F85 — REF. SK. 62-3F 12E — PART NO. 387270

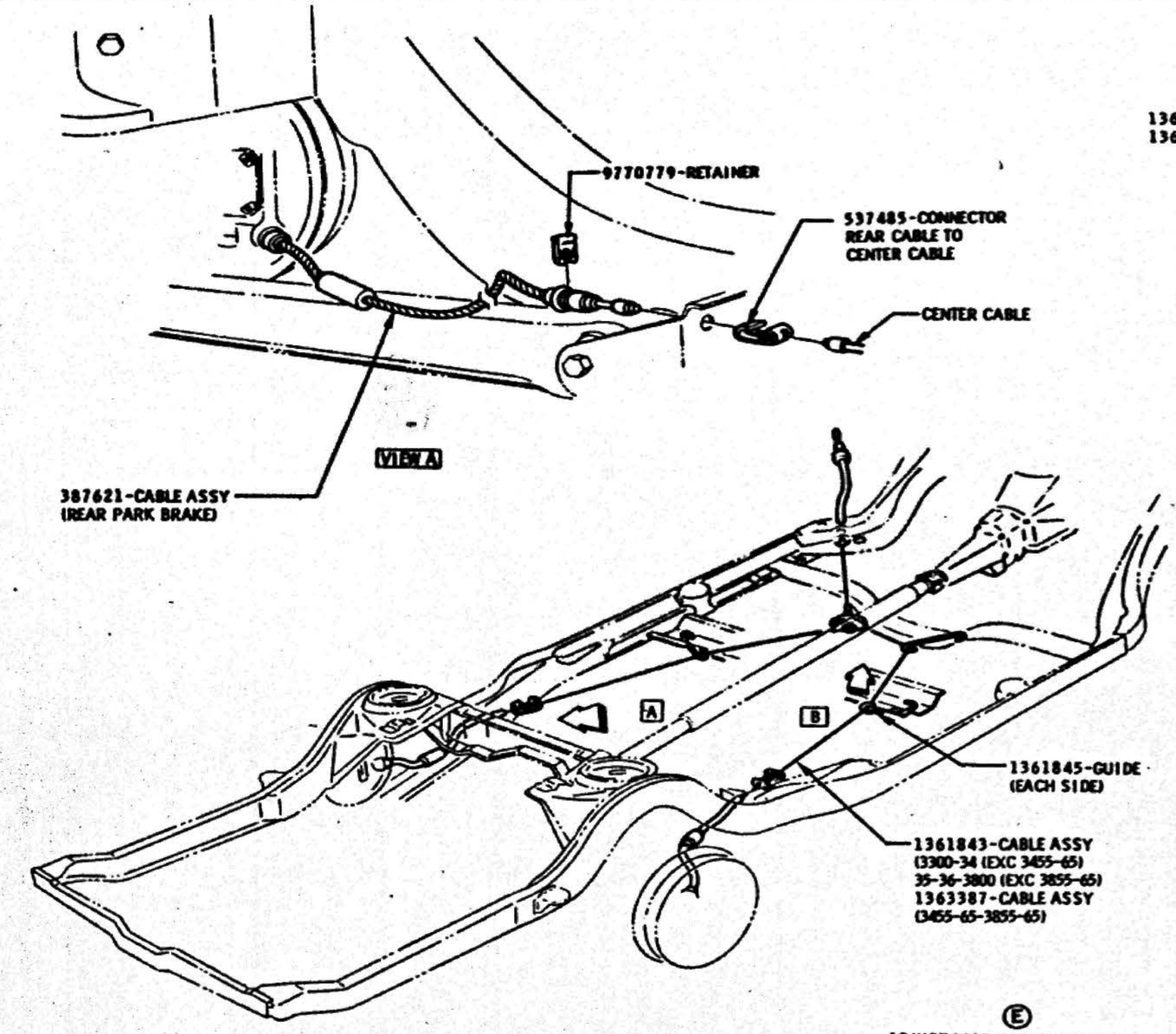

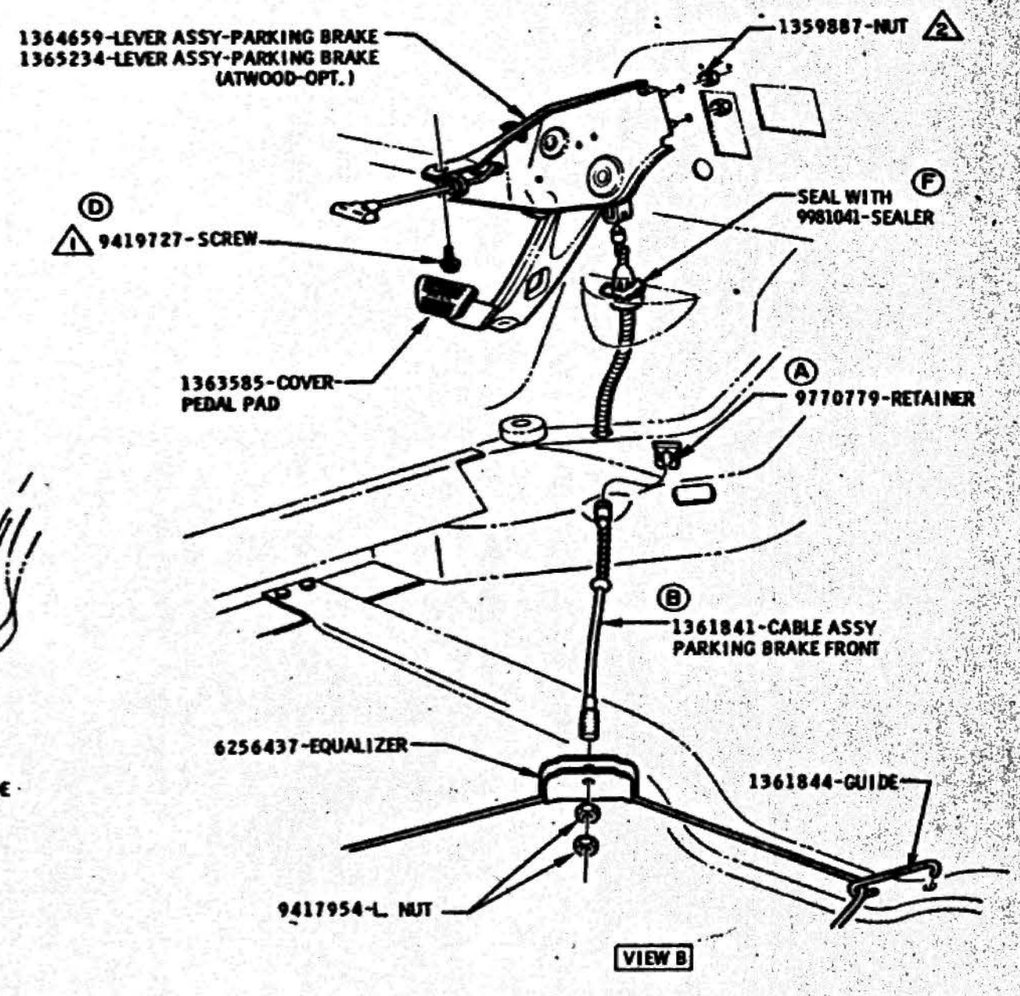

E

ADJUST REAR CABLE TENSION IN RELEASED POSITION TO PRODUCE A PEDAL LOAD OF 55-65 LBS FOR 5 CLICKS TRAVEL OF PEDAL.

C

1 72-108 LBS. IN.

2 84-120 LBS. IN.

DATE	SYM	REVISION	DR.	CK.	DATE	SYM	REVISION	DR.	CK.	DATE	SYM	REVISION	DR.	CK.
										8-18-66	E	NOTE ADDED		
										6-30-64	D	WAS 9409107		
										6-30-64	C	TORQUE SPEC ADDED		
										2-14-66	B	1361841 WAS 384302		
					10-5-64	F	NOTE ADDED	CG	JP	2-10-64	A	9770779 WAS 579058		

INSTALLATION

DATE JAN. 30, 1964

DR. BY D. GUNTHER

CHECKED B. FITER

APPR.

APPR.

FIRST USED 1965

Oldsmobile GRAPHIC ILLUSTRATION

SERIES F-85

REV. 5D

PAGE 5-2.4

PART NO. 387270

BRAKE CONTROL (PARKING)

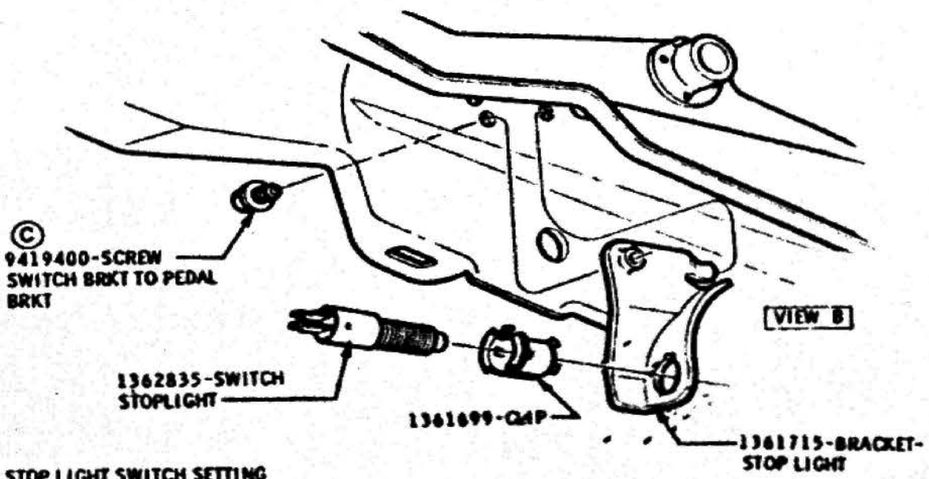

STOP LIGHT SWITCH SETTING

1. ADJUST BRAKE PEDAL HEIGHT BEFORE ADJUSTING SWITCH.
2. INSERT SWITCH INTO TUBULAR CLIP UNTIL SWITCH BODY SEATS ON TUBE CLIP.
3. PULL BRAKE PEDAL REARWARD AGAINST INTERNAL PEDAL STOP. SWITCH WILL BE MOVED IN TUBULAR CLIP PROVIDING PROPER ADJUSTMENT.

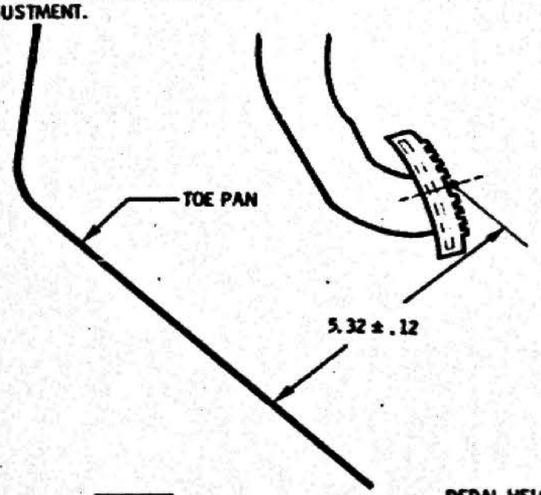

VIEW A

PEDAL HEIGHT MEASURED 15.00" OUTBOARD FROM CENTERLINE OF CAR FOR SMT & JT

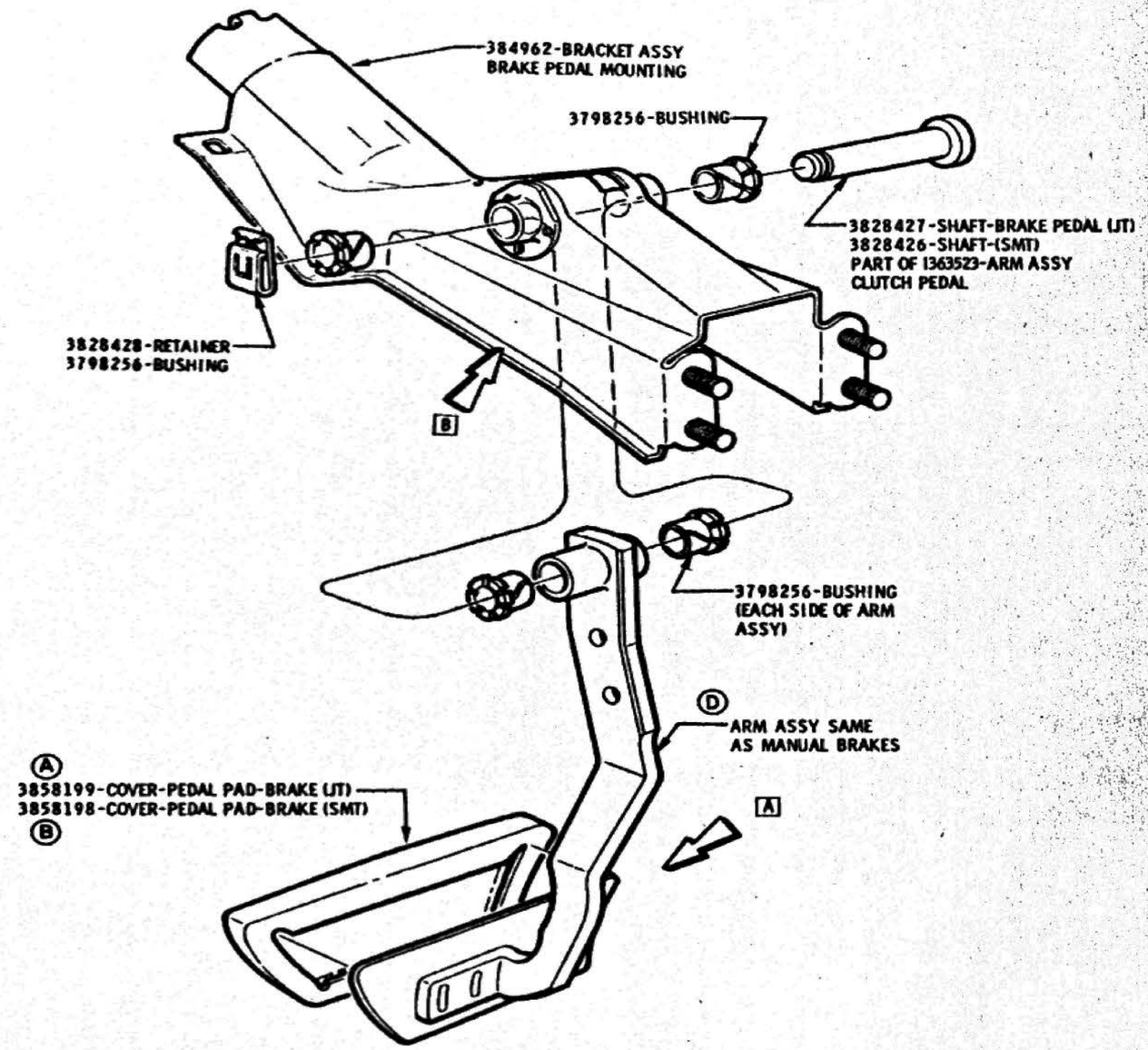

DATE	SYM	REVISION	DR.	CK.	DATE	SYM	REVISION	DR.	CK.	DATE	SYM	REVISION	DR.	CK.
										12-9-64	D	WAS 1361711 & 1361712		
										5-6-64	C	WAS 1361748		
										1-8-64	B	WAS 1363611		
										1-2-64	A	WAS 1363630		

INSTALLATION	BRAKE CONTROL (POWER)
DATE JAN. 30, 1964	FIRST USED 1965
DR. BY D. GUNTHER	Oldsmobile GRAPHIC ILLUSTRATION
CHECKED D. TITUS	PAGE 5-2.5
APPR.	SERIES F-85
APPR.	REF. 5C 12B
	PART NO. 387270

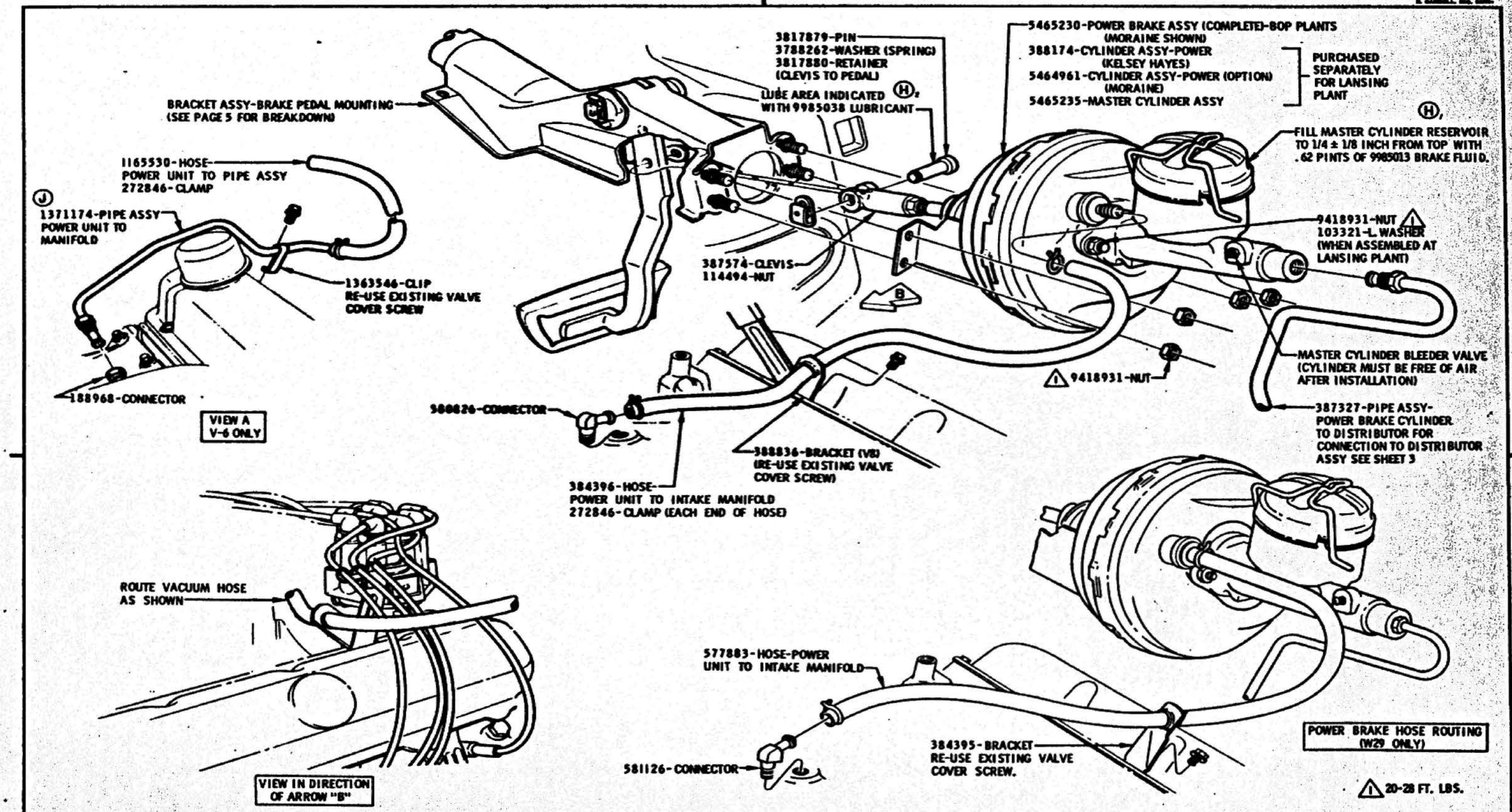

DATE	SYM	REVISION	DR.	CK.	DATE	SYM	REVISION	DR.	CK.	DATE	SYM	REVISION	DR.	CK.
										4-21-64	E	WAS 581126-CONNECTOR *	W.M.	PTS
					3-17-65	J	WAS 1364158 PIPE ASSY *			4-21-64	D	WAS 384395-BRACKET	W.M.	PTS
					11-27-64	H	NOTES ADDED	J.C.	PTS	4-21-64	C	VIEW ADDED	W.M.	PTS
					7-1-64	G	TORQUE SPEC. ADDED	W.S.	PTS	4-13-64	B	NOTE REMOVED	R.A.	PTS
					6-18-64	F	VIEW ADDED	W.M.	PTS	4-13-64	A	PART NO.'S REVISED	W.M.	PTS

INSTALLATION
DATE JAN. 30, 1964
DR. BY R. GOODWIN
CHECKED D. TITUS
APPR.
APPR.

BRAKE CONTROL (POWER)

FIRST USED 1965
Oldsmobile GRAPHIC ILLUSTRATION
SERIES F-85
REF. 55J80
PAGE 5-2.6
PART NO. 387270

ENGINE

DRAWING NO.	DRAWING NAME	PAGE NO.
---	ENGINE CONVERSION PROCEDURE	6 - 1.2
387420	ENGINE DRESS PARTS (V8)	6 - 2.1
387442	ENGINE DRESS PARTS (V6)	6 - 3.1
387779	V8 PULLEY & BELT CHART	6 - 4.1
388149	ENGINE APPEARANCE CHART	6 - 5.1
389265	POWER PLANT TO FRAME	6 - 6.1
388000	ENGINE IDENTIFICATION CHART	6 - 7.1
388275	V6 PULLEY & BELT CHART	6 - 8.1

Rev. 12/1/64

1965 - F85 & JETSTAR ENGINE ASSEMBLIES

PROCEDURE FOR CONVERTING 330 BIG CAR ENGINES TO 35C60

ITEM	REMOVE	INSTALL
* Body Assembly	386393	387239
Gasket - Water Pump	385936 (Scrap)	385936
Connector - Fuel Pump Outlet	143343	386940
Bracket - Generator	382787	------
Bolt 2	9418994	------
Washer 2	103321	------
Cable Assembly - Spark Plug #2	2988276	2988278
Valve Assembly - Water Control	389159	389096
Carburetors		
2 Barrel - AT and SM	7025058	7025159
4 Barrel - AT	7025054	7025157
4 Barrel - SM	7025055	7025158
Heater Vacuum Connector	103877	382890

PROCEDURE FOR CONVERTING F-85 V8 ENGINES TO 35C60

Gasket	385936 (Scrap)	385936
* Water Pump Assembly	386393	387239
Bracket - Generator	382787	------
Bolt Bracket to Cylinder Head	9418994 (2)	------
Washer - Bracket to Head	103321 (2)	------
Cable Assembly - Spark Plug #2	2988276	2988278
Connector - Heater Vacuum	103877	382890
Valve - Water Control	389159	389096
Carburetor		
2 Barrel - AT and SM	7025058	7025159
4 Barrel - AT	7025054	7025157
4 Barrel - SM	7025055	7025158

PROCEDURE FOR CONVERTING ALL 330 ENGINES TO 35Y76

* Body Assembly	386393	387239
Gasket - Water Pump	385936 (Scrap)	385936

* Water pump bodies must be painted with engine enamel.

1965 - 330 CUBIC INCH ENGINE ASSEMBLIES

PROCEDURE FOR CONVERTING ALL 330 ENGINES TO 35K20

ITEM	REMOVE	INSTALL
Valve Cover Assembly (LH)	382141	385202
Valve Assembly - Vent (LH)	------	6419564
Grommet - Valve to LH Valve Cover	------	385283
Clamp - Hose to Vent Valve (LH)	------	3786276
Gasket - Valve Cover (LH)	382935 (Scrap)	382935
Cap Assembly - Oil Filler	6418875	6420459
Connector - Hose to Carburetor	588238	1357031
Grommet - Filter to Valve Cover (RH)	385204	385284
Filter Assembly - Vent (RH)	6419630	387198
Grommet - Vent Pipe to Filter (RH)	------	581112
Hose - Vent Pipe to Valve (RH)	385285	------
Clamp - Hose to Vent Valve	272852	------
Hose - Vent Valve to Carburetor	382891	383304

PROCEDURE FOR CONVERTING 35K20 ENGINES TO STANDARD

Valve Assembly - Vent (LH)	6419564	------
Grommet - Valve to LH Valve Cover	385283	------
Clamp - Hose to Vent Valve (LH)	3786276	------
Plug - LH Valve Cover	------	386676
Connector - Hose to Carburetor	1357031	588238
Hose - Vent Valve to Carburetor	383304	382891
Grommet - Vent Valve to Valve Cover (RH)	------	385204
Valve Assembly - Vent (RH)	------	6419630
Hose - Vent Pipe to Vent Valve (RH)	------	385285
Clamp - Hose to Vent Valve (RH)	------	272852

330 CUBIC INCH ENGINE ASSEMBLIES FOR 1965

PART NUMBER	UPC CODE	PRO.* CODE	TRANSMISSION		CARBURETOR		COMPRESSION RATIO					EXHAUST MANIFOLDS		AIR CONDITIONING	SPECIAL ACCESSORIES
							PISTON								
			SYNCHROMESH	AUTOMATIC	2 BARREL	4 BARREL	EXPORT	REG. FUEL	PREM. FUEL	STARFIRE		"A" BODY	"B" BODY		
388028	M33	QA		X	X			X				X			
388029	C60	QB		X	X			X				X		X	
388030	L90	QC		X	X		X					X			
388031	6	QI	X		X			X				X			
388032	M01	QJ	X		X			X				X			HEAVY DUTY CLUTCH
388033	L90	QK	X		X		X					X			
388034	M33	QN		X		X			X			X			
388035	L90	QO		X		X	X					X			
388036	6	QV	X			X			X			X			
388037	M01	QX	X			X			X			X			HEAVY DUTY CLUTCH
388038	L90	QY	X			X	X					X			
388039	B09	QZ	X			X			X			X			SPECIAL CAM, ETC.

REFERENCE: ENGINE CHART #388000

* CALIFORNIA VENTILATION ENGINES WILL HAVE A "K20" TAPE ADDED.

330 CUBIC INCH ENGINE ASSEMBLIES FOR 1965

PART NUMBER	UPC CODE	PRO. CODE*	TRANSMISSION		CARBURETOR		COMPRESSION RATIO					EXHAUST MANIFOLDS		AIR CONDITIONING	SPECIAL ACCESSORIES
							PISTON								
			SYNCHROMESH	AUTOMATIC	2 BARREL	4 BARREL	EXPORT	REG. FUEL	PREM. FUEL	STARFIRE		"A" BODY	"B" BODY		
388017	M33	TA		X	X				X				X		
388018	C60	TB		X	X				X				X	X	
388019	L90	TC		X	X		X						X		
388020	6	TI	X		X				X				X		
388021	M01	TJ	X		X				X				X		HEAVY DUTY CLUTCH
388022	L90	TK	X		X		X						X		
388023	M33	TN		X		X			X				X		
388024	L90	TO		X		X	X						X		
388025	L74	TV	X			X			X				X		
388026	M01	TX	X			X			X				X		HEAVY DUTY CLUTCH
388027	L90	TY	X			X	X						X		

REFERENCE: ENGINE CHART #388000

* CALIFORNIA VENTILATION ENGINES WILL HAVE A "K20" TAPE ADDED.

1965 - F85 & JETSTAR ENGINE ASSEMBLIES

CONVERSION PROCEDURES

1965 399.5 CUBIC INCH ENGINES MAY BE CONVERTED TO 35C60 BY THE FOLLOWING:

ITEM	REMOVE	INSTALL
*Body Assembly - Water Pump	386393	387239
Gasket - Water Pump	385936 (Scrap)	385936
Cable Assembly - Spark Plug #2	2988276	2988278
Bracket - Generator	382787	------
Bolt - Generator Bracket	9418994	------
Washer (Lock) - Generator Bracket	103321	------
Carburetor	7025150	7025151
Fuel Pump	6440259	6440262
Cover - Valve R.H.	385202	389419
Gasket - Valve Cover	382935 (Scrap)	382935
Gasket - Cement	------	Dupont EC5702 or 9985027

6-1.6*

1965 399.5 CUBIC INCH ENGINES MAY BE CONVERTED TO 35Y76 BY THE FOLLOWING:

*Body Assembly - Water Pump	386393	387239
Gasket - Water Pump	38536 (Scrap)	385936

*Water pump bodies must be painted with engine Enamel.

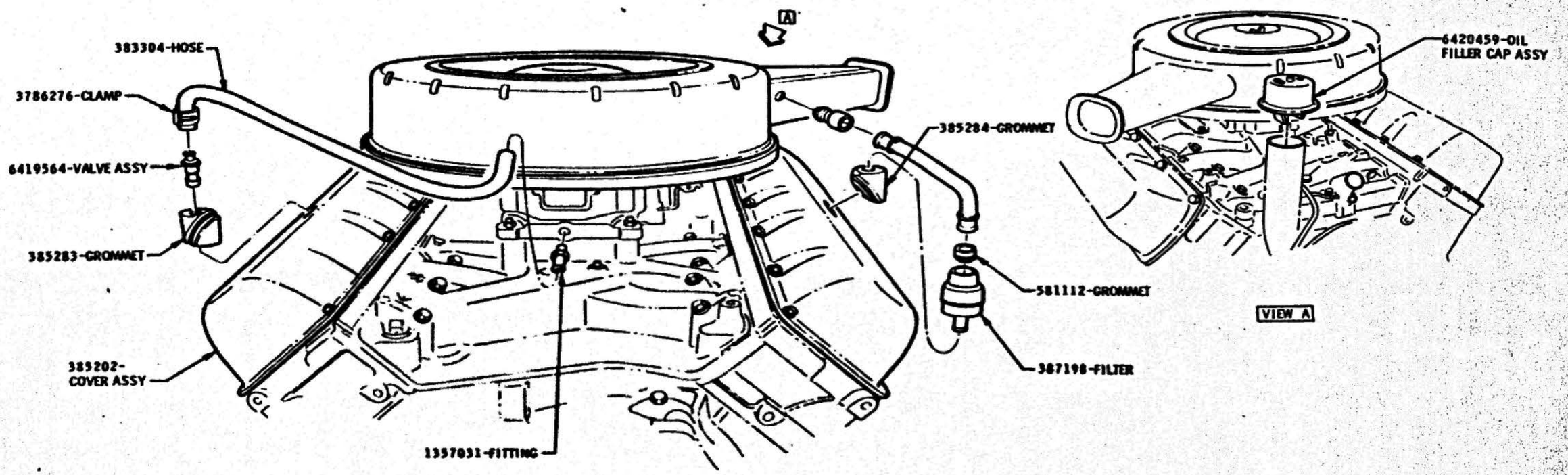

H

G

G

(J) ENGINE OIL LEVEL
(AS SHIPPED FROM ASSEMBLY PLANTS)
TO BE FROM THE
"FULL" MARK TO .80"
ABOVE THE "FULL" MARK

DATE	SYM	REVISION	DR.	CK.	DATE	SYM	REVISION	DR.	CK.	DATE	SYM	REVISION	DR.	CK.
										10-1-64	E	VIEW ADDED		
					12-19-64	J	NOTE ADDED			8-3-64	D	VIEW "B" REMOVED		
					10-30-64	H	VIEW & NOTES REMOVED			7-24-64	C	VIEW "B" ADDED		
					10-12-64	G	NOTES REVISED			5-4-64	B	WAS 6419983 VALVE		
					8-12-64	F	NOTES ADDED			5-4-64	A	REVISED TO DETAIL		

INSTALLATION
DATE APRIL 10, 1964
DR. BY PIONEER T.D.
CHECKED
APPR.
APPR.

ENGINE DRESS PARTS (V-8)

FIRST USED 1965 — Oldsmobile Service ILLUSTRATION — PAGE 6-2.1*

SERIES BIG CAR F85 — REF. K20 — PART NO. 387420

DD

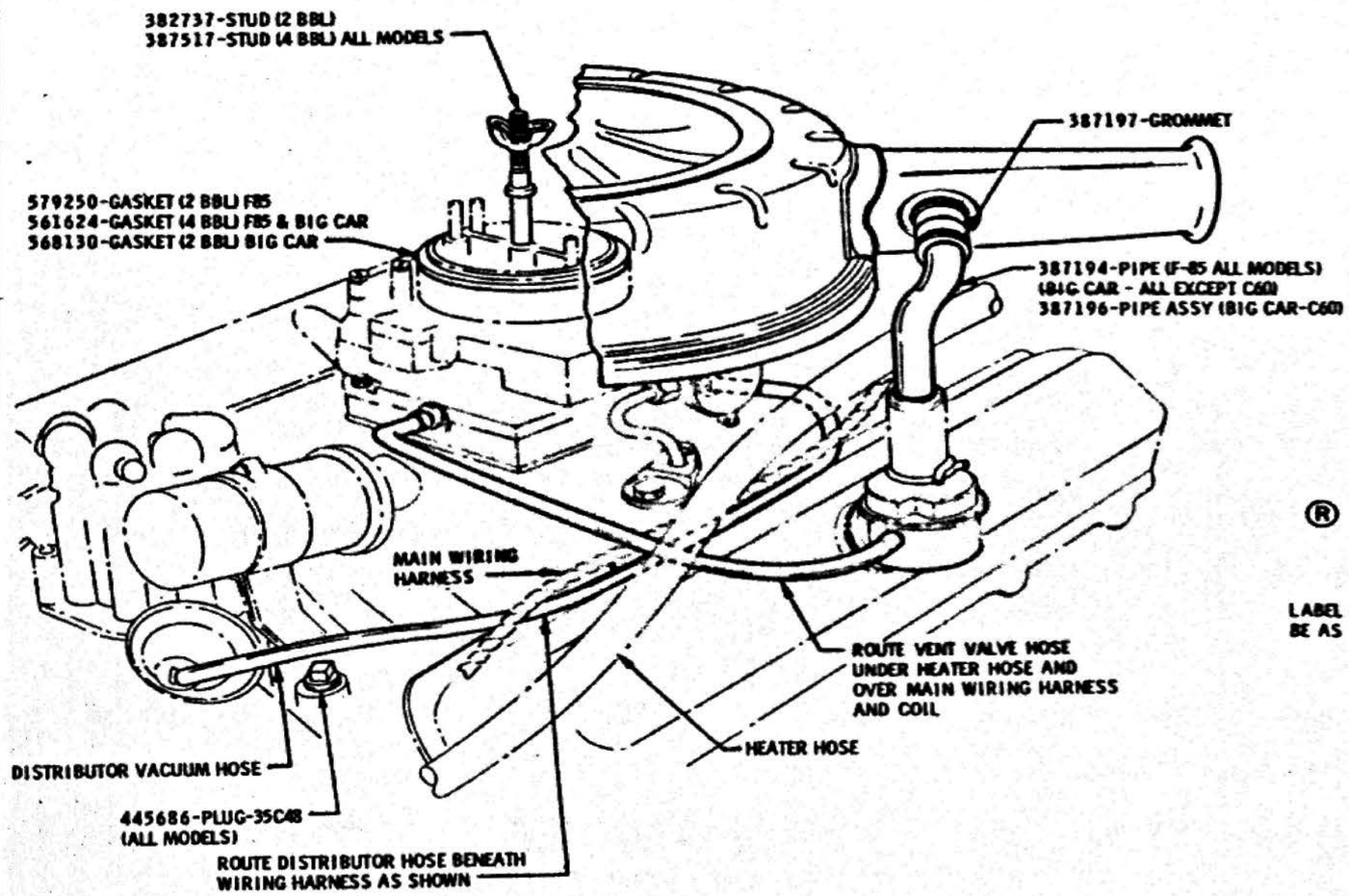

®

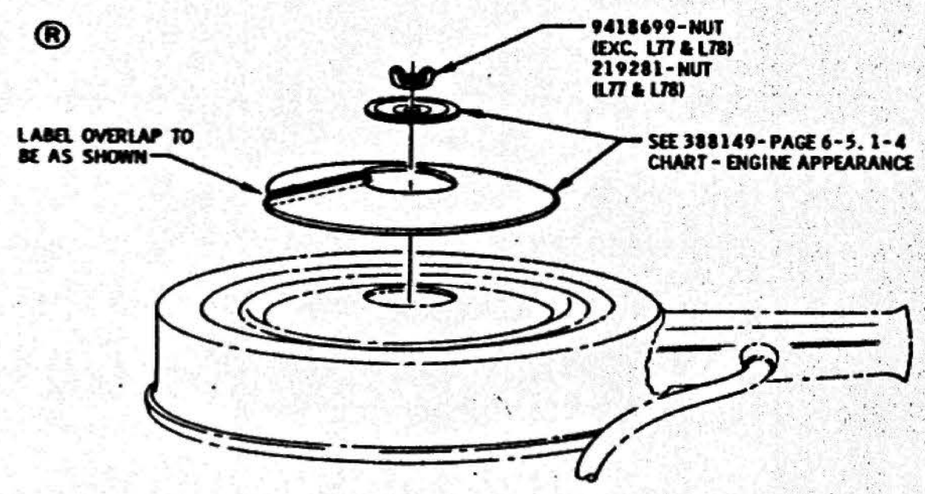

Ⓢ

LABEL INSTALLATION

BIG CAR SHOWN, F85 SIMILAR

DATE	SYM	REVISION	DR.	CK.	DATE	SYM	REVISION	DR.	CK.	DATE	SYM	REVISION	DR.	CK.
										1-6-65	S	"View & Notes Added"		
										10-20-64	R	View & Notes Revised.		

INSTALLATION	ENGINE DRESS PARTS (V-8)			
DATE APRIL 10, 1964	FIRST USED 1965	Oldsmobile Classic ILLUSTRATION		PAGE 6-2.2*
DR. BY C. V. BEACHMAN				
CHECKED R. Bernhart				
APPR.	SERIES BIG CAR F85	REF. 6N		PART NO. 387420
APPR.				

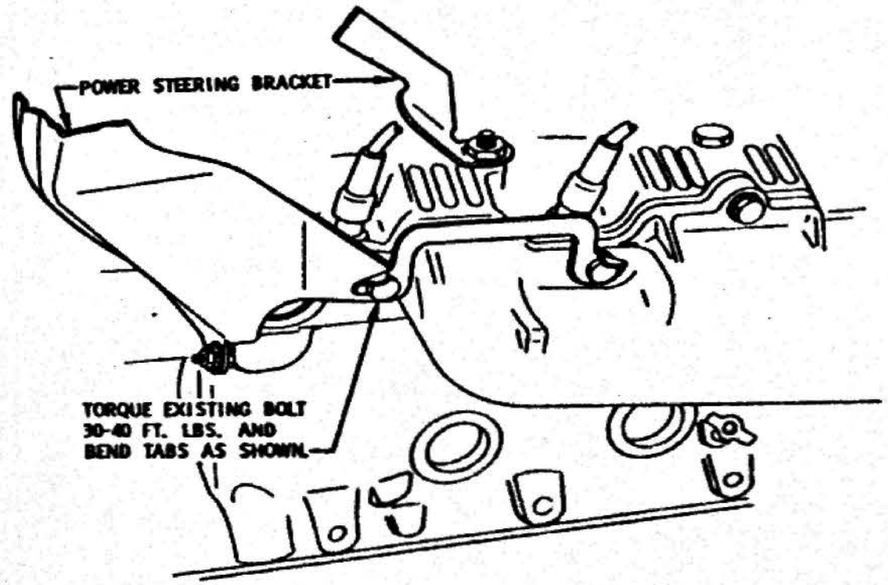

L.H. SIDE OF ENGINE

(MODELS WITH POWER STEERING)

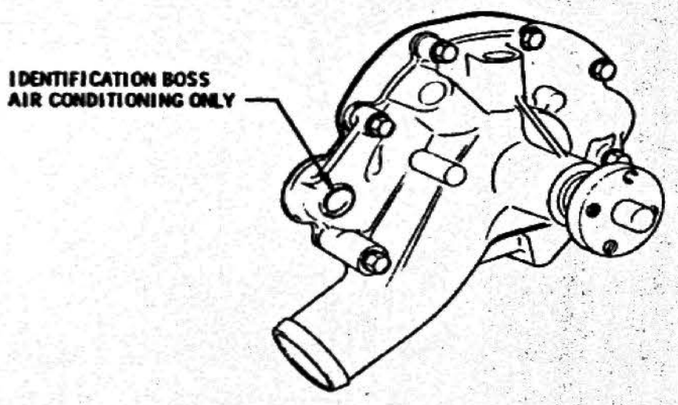

V-8 WATER PUMP
AIR CONDITIONING ONLY

TO FRONT OF CAR

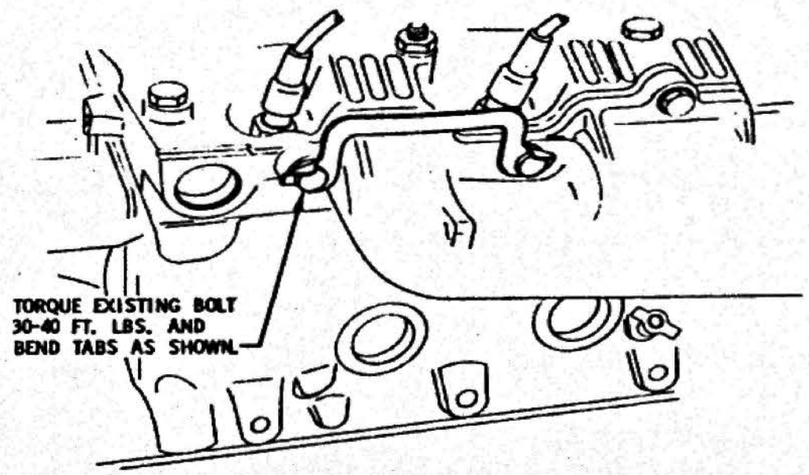

L.H. SIDE OF ENGINE

(MODELS WITHOUT POWER STEERING)

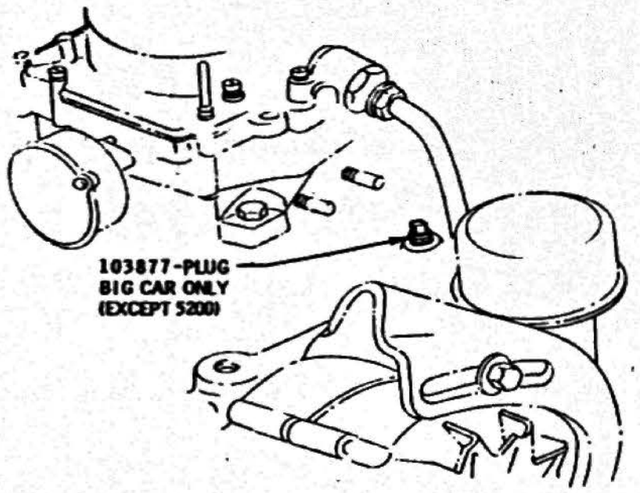

MANIFOLD PLUG
35C48 ONLY

(A)1

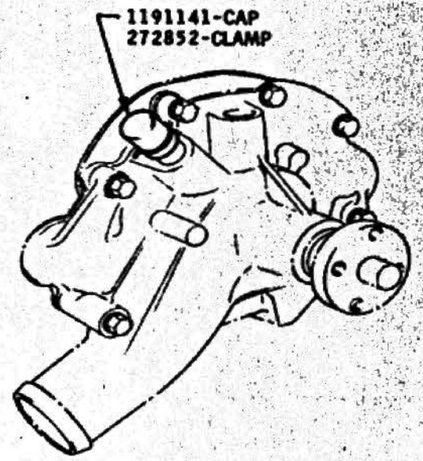

V-8 WATER PUMP
35C48 USAGE

(A)2

DATE	SYM	REVISION	DR.	CK.	DATE	SYM	REVISION	DR.	CK.	DATE	SYM	REVISION	DR.	CK.
										8-24-64	B A2	VIEW ADDED	KR	PMZ

INSTALLATION ENGINE DRESS PARTS

DATE AUGUST 12, 1964

DR. BY H.E. MASON - E.J. ROE

CHECKED

APPR.

APPR.

FIRST USED 1965

Oldsmobile GRAPHICS ILLUSTRATION

PAGE 6-2.3*

SERIES BIG CAR F85

REF.

PART NO. 387420

DD

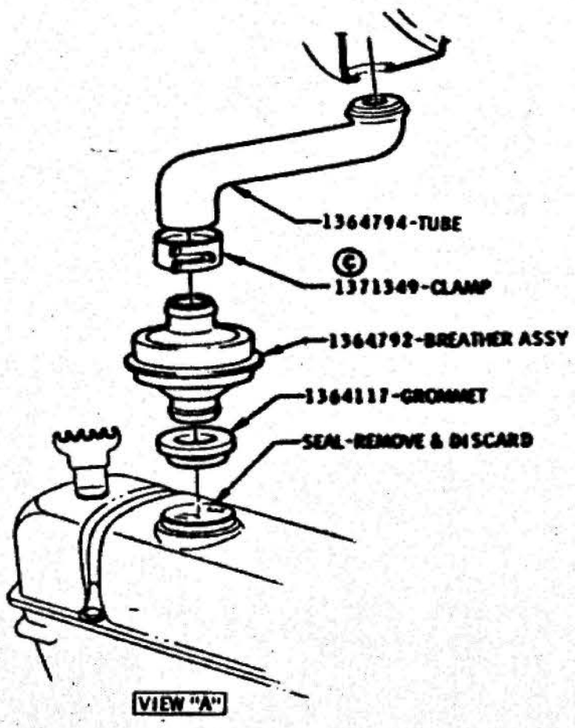

35K20 INSTALLATION

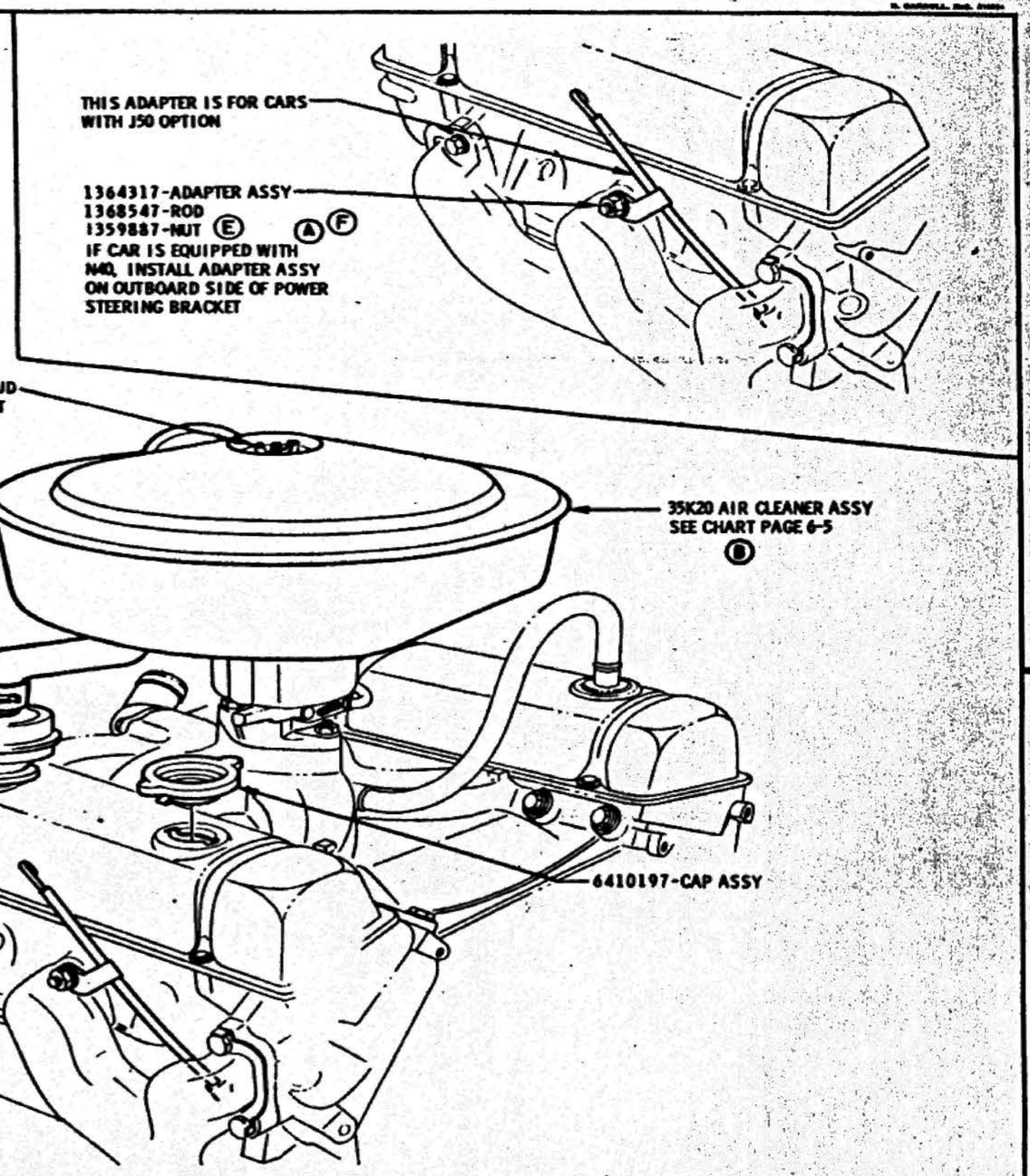

DATE	SYM	REVISION	DR.	CK.	DATE	SYM	REVISION	DR.	CK.	DATE	SYM	REVISION	DR.	CK.
										10-28-64	E	WAS 9417954 NUT	GG	JF
										6-18-64	D	PART NO'S ADDED	RA	[illegible]
										5-4-64	C	1371349 - WAS 272855	WM	[illegible]
										4-14-64	B	NOTE REVISED	WM	[illegible]
					10-28-64	F	9419275-WASHER REMOVED	GG	JF	4-14-64	A	PART NO'S ADDED	[illegible]	[illegible]

INSTALLATION — ENGINE DRESS PARTS (V-6)

DATE APRIL 6, 1964
DR. BY PIONEER T.D.
CHECKED [illegible]
APPR.
APPR.

FIRST USED 1965 — Oldsmobile DIVISION ILLUSTRATION — SERIES F85 — REF. — PAGE 6-3.1 — PART NO. 387442

CODE LETTER	PART NUMBER	BELT LENGTH (K)
LA	382615	48.50
LB	382616	49.62
LC	382644	59.50
LD	382645	61.00
(H)1 • LE	384424 (SET)	49.62
LF	384423	58.50
• LG	386060 (SET)	47.75
(B) LH	386061	47.75
LI	386062	50.82
(L)2 LJ	390423	62.75
(M)2 LK	390424	65.27
LL	386066	63.47
LM	387257	61.70
(E) LN	387804	51.95

• NOT SHOWN ON BELTS.

(H)2 BELT SET 384424 (LE) IS MADE UP OF TWO 382616 (LB) BELTS.
BELT SET 386060 (LG) IS MADE UP OF TWO 386061 (LH) BELTS.

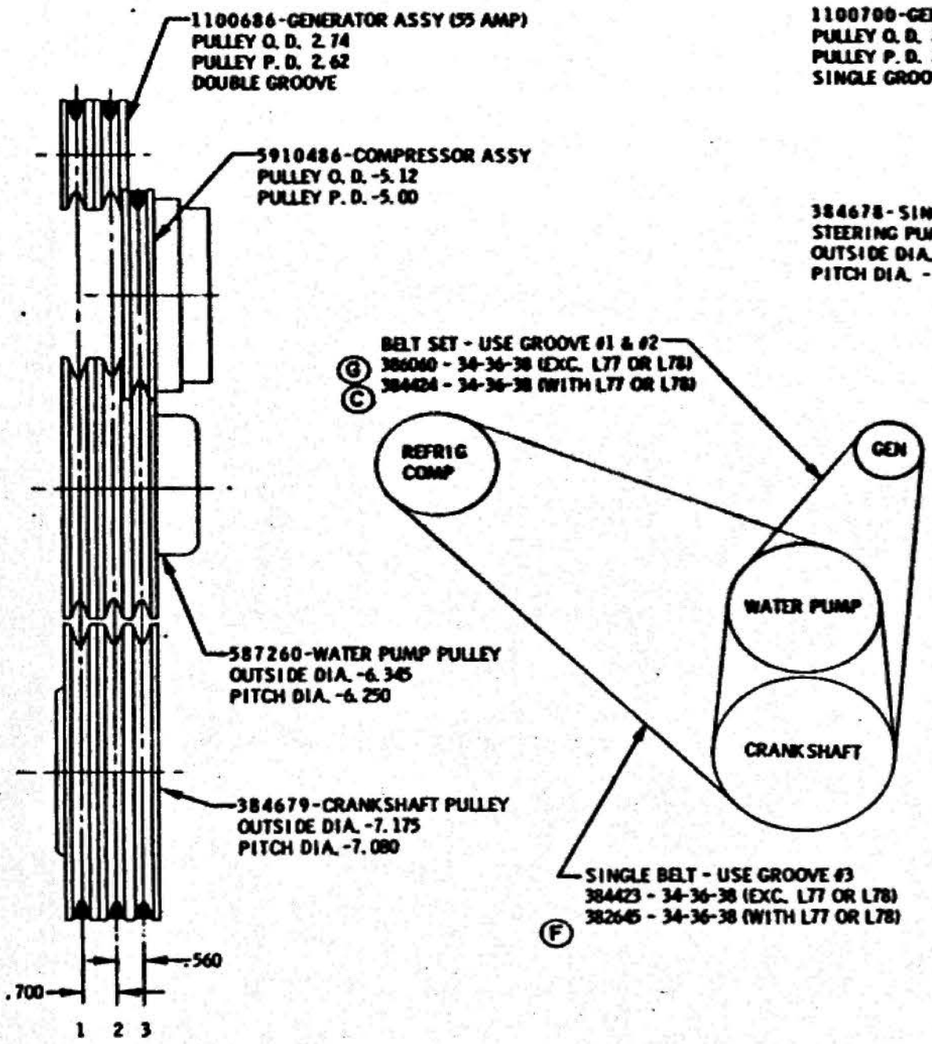

AIR CONDITIONING WITHOUT POWER STEERING

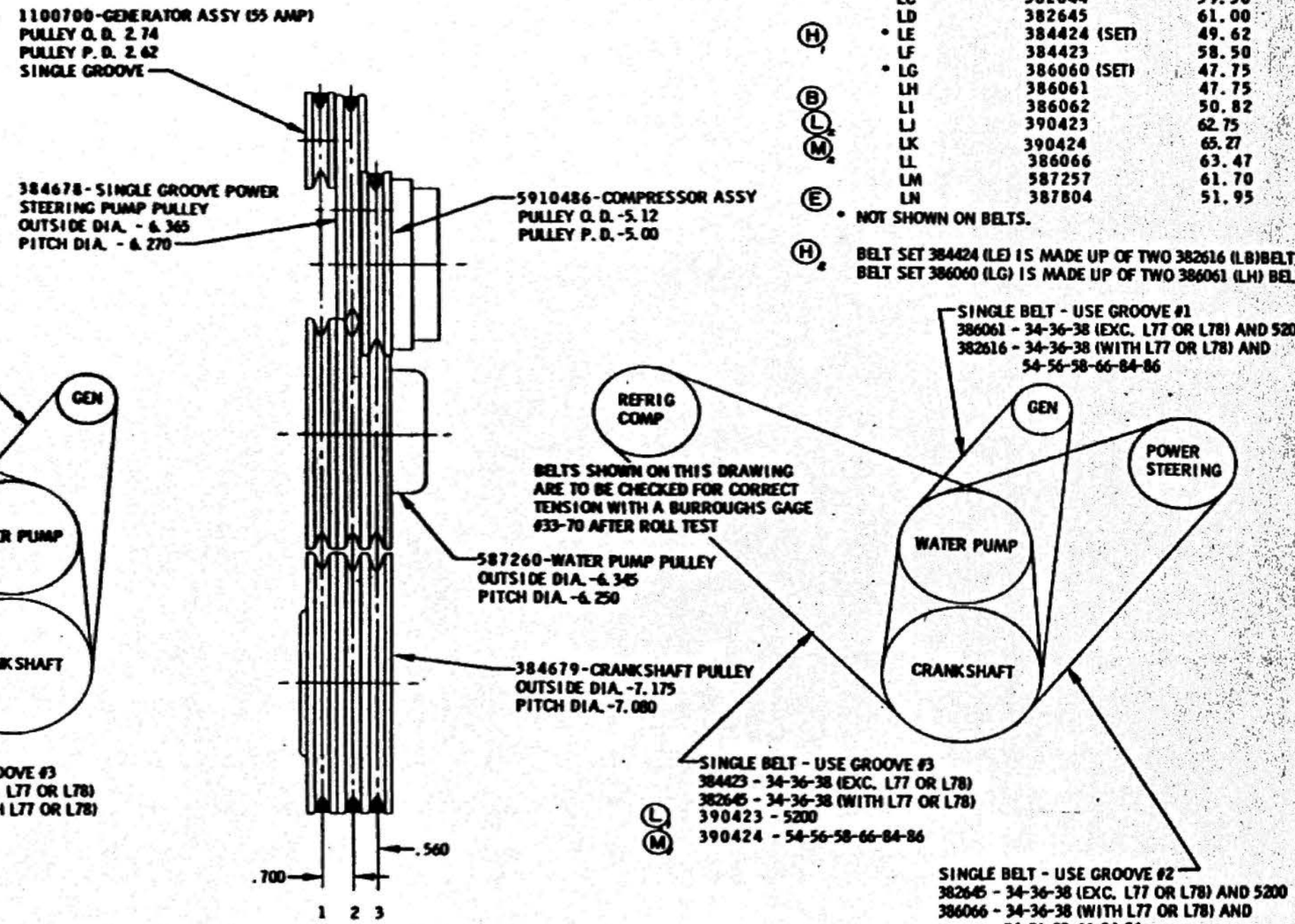

AIR CONDITIONING WITH POWER STEERING

BELTS SHOWN ON THIS DRAWING ARE TO BE CHECKED FOR CORRECT TENSION WITH A BURROUGHS GAGE (N) #33-70M AFTER ROLL TEST

DATE	SYM	REVISION	DR.	CK.	DATE	SYM	REVISION	DR.	CK.	DATE	SYM	REVISION	DR.	CK.
					7-6-64	K	BELT LENGTHS ADDED			5-12-64	E	LN 387804 ADDED		
					7-6-64	J	BELT NOTES REVISED			3-11-64	D	WAS SHEET 1 OF 2		
9-16-64	N	WAS #33-70			7-6-64	H2	LE 384424 ADDED			3-11-64	C	384424 BELT SET REMOVED		
8-26-64	M2	WAS 386064 64.05			6-16-64	G	5200 SERIES REMOVED			3-11-64	B	BELT IDENTIFICATION REV		
8-26-64	L2	WAS 386063 61.94			6-16-64	F	386063 & 4 NOT ADDED			3-8-64	A	FORMAT REVISED		

DATE JANUARY 4, 1964
DR. BY JACQUI PERKINS
CHECKED D. LAFORD
APPR.
APPR.

CHART-PULLEY & BELT (V8)

FIRST USED 1965
Oldsmobile GRAPHIC ILLUSTRATION
SERIES ALL
REV.
PAGE 6-4.1*
PART NO. 387779

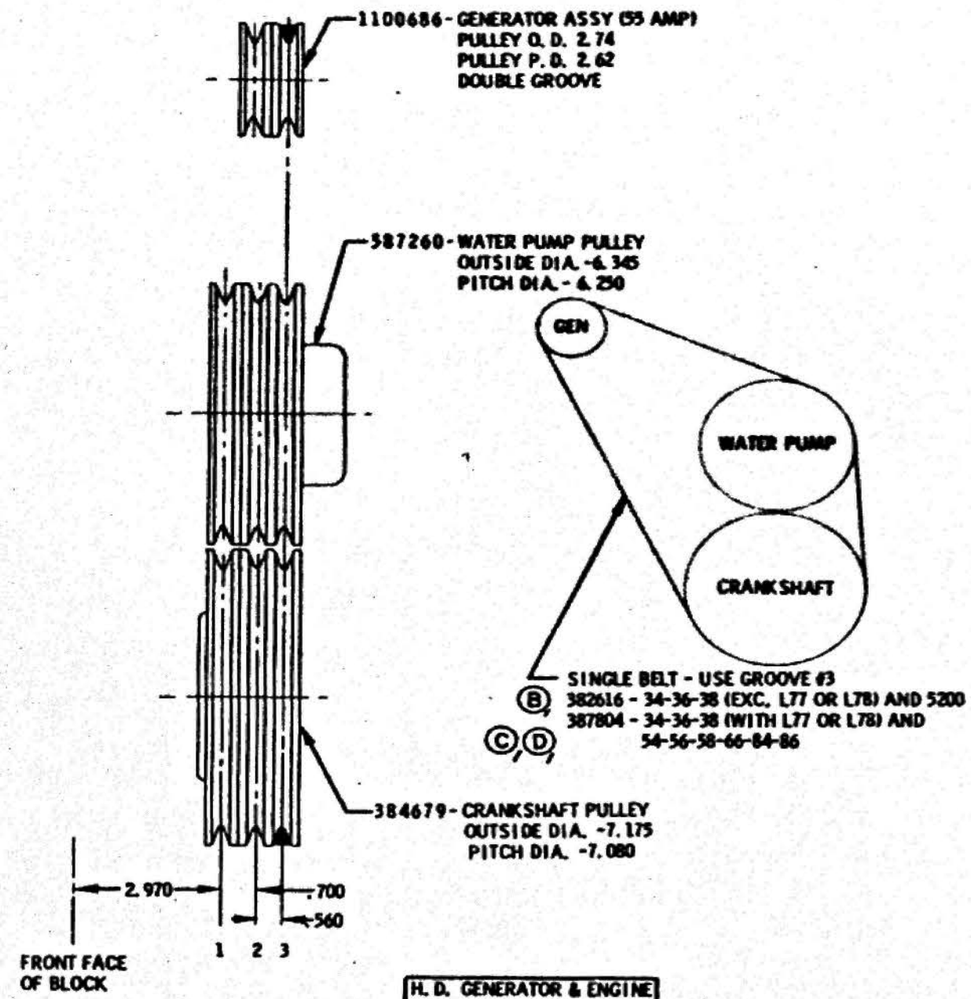

H. D. GENERATOR & ENGINE
COOLING
WITHOUT
POWER STEERING

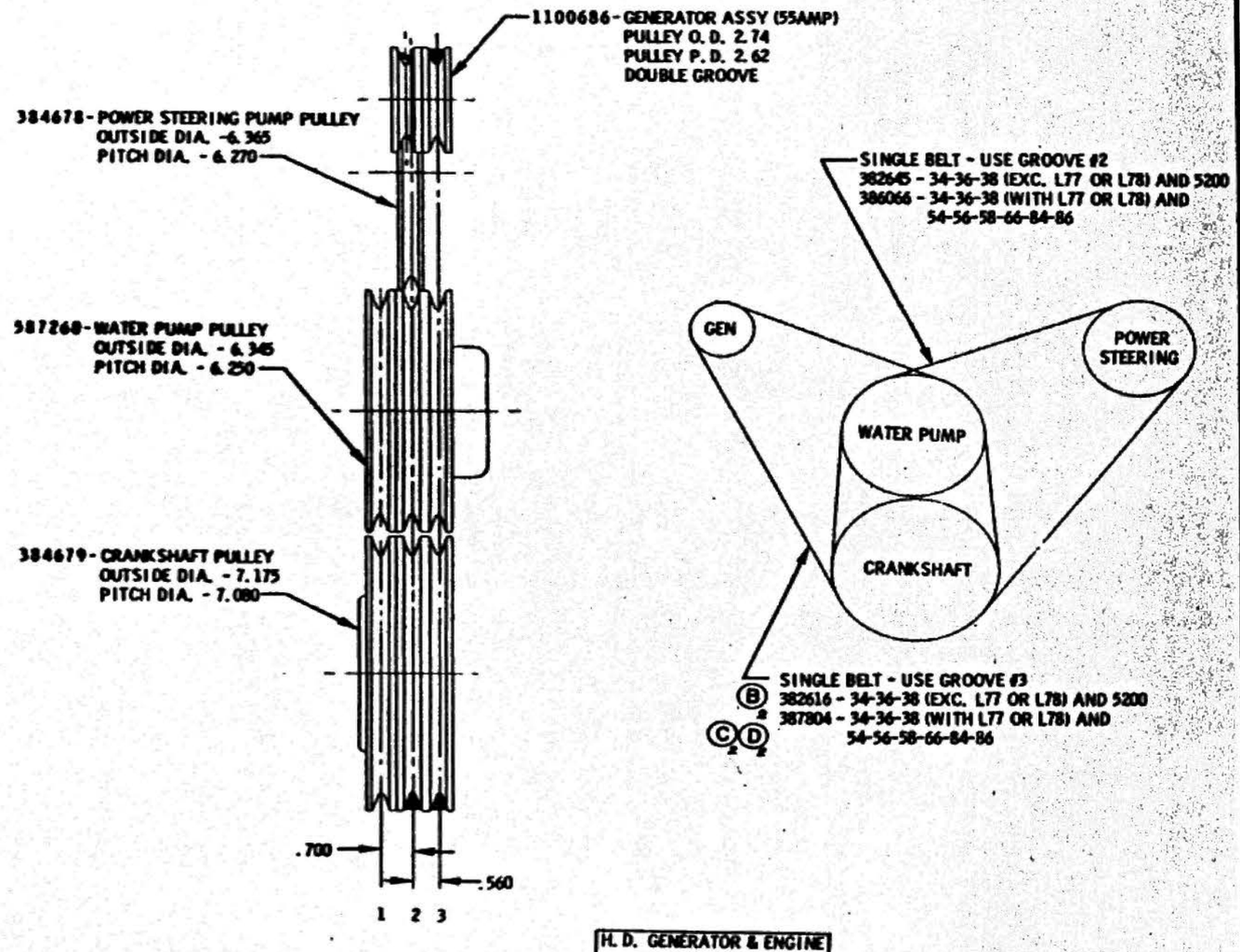

H. D. GENERATOR & ENGINE
COOLING
WITH
POWER STEERING

BELTS SHOWN ON THIS DRAWING ARE TO BE CHECKED FOR CORRECT TENSION WITH A BURROUGHS GAGE
J #33-70M AFTER ROLL TEST

E G
FOR BELT IDENTIFICATION CODE AND LENGTH SEE CHART ON PAGE 6-4.1

DATE	SYM	REVISION	DR.	CK.	DATE	SYM	REVISION	DR.	CK.	DATE	SYM	REVISION	DR.	CK.
										3-11-64	E	BELT IDENTIFICATION REVISED		
					9-16-64	J	WAS "33-70"			3-11-64	D_2	PART NO. ADDED		
					7-6-64	H	BELT NOTES REVISED			3-11-64	C_2	51.95 WAS 49.62		
					7-6-64	G	NOTE REVISED			3-11-64	B_2	49.62 WAS 48.19		
					3-11-64	F	WAS SHEET 2 OF 2			3-11-64	A	FORMAT REVISED		

CHART-PULLEY & BELT (V8)

DATE FEBRUARY 3, 1964
DR. BY JACQUI PERKINS
CHECKED D. LAFOND
APPR.
APPR.

FIRST USED 1965
Oldsmobile GRAPHIC ILLUSTRATION
SERIES ALL
REV.
PAGE 6-4.2*
PART NO. 387779

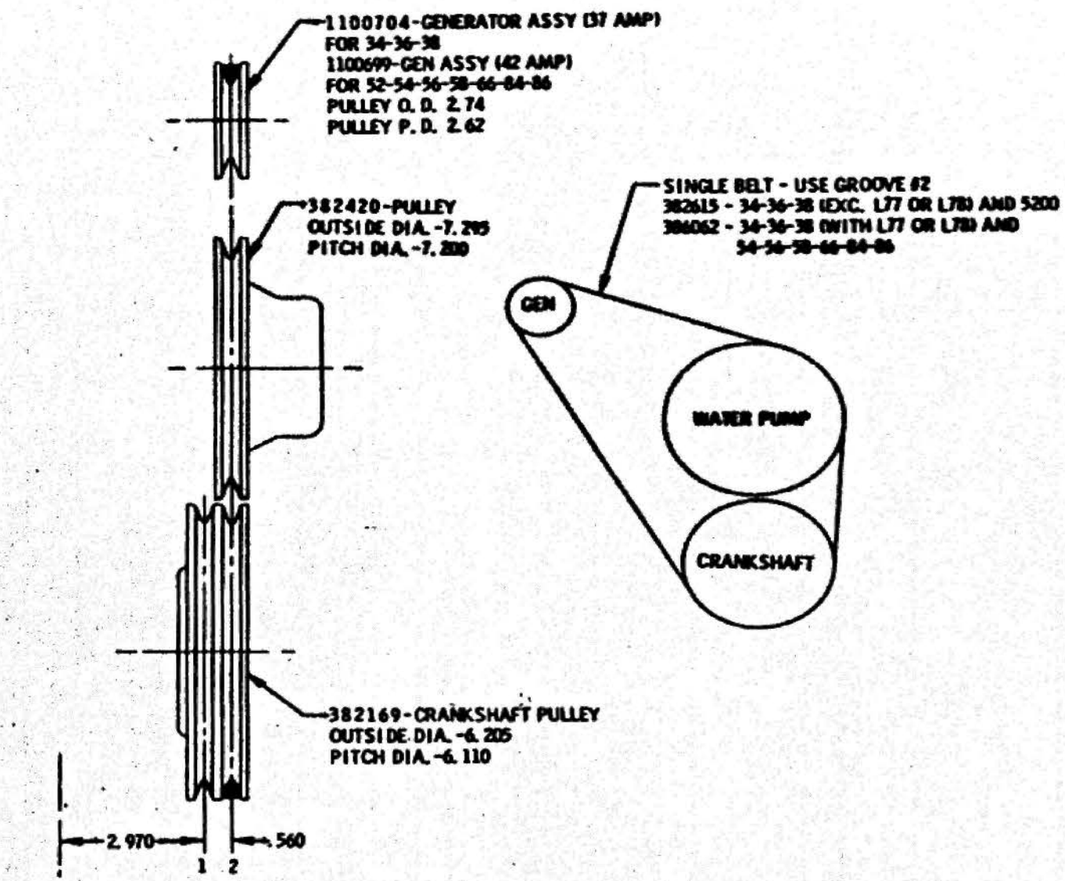

STANDARD CAR #1 GROOVE ON CRANKSHAFT PULLEY RUNS EMPTY

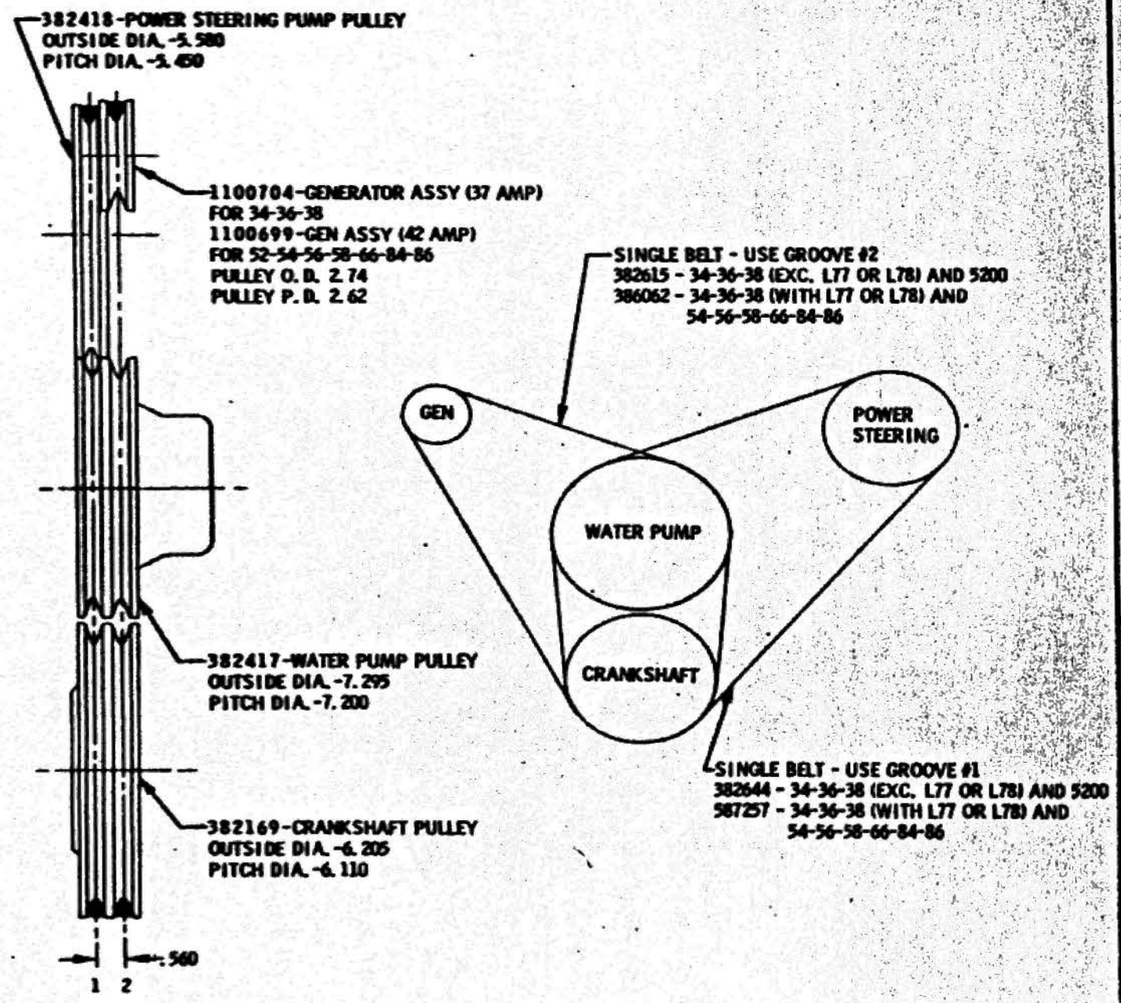

POWER STEERING

(F) BELTS SHOWN ON THIS DRAWING ARE TO BE CHECKED FOR CORRECT TENSION WITH A BURROUGHS GAGE #33-70M AFTER ROLL TEST

(B) (D) FOR BELT IDENTIFICATION CODE AND LENGTH SEE CHART ON PAGE 6-4.1

DATE	SYM	REVISION	DR.	CK.	DATE	SYM	REVISION	DR.	CK.	DATE	SYM	REVISION	DR.	CK.
										7-6-64	E	BELT NOTES REVISED		
										7-6-64	D	NOTE REVISED		
										3-11-64	C	WAS SHEET 1 OF 2		
										5-11-61	B	BELT IDENTIFICATION REVISED		
					9-16-63	F	WAS #33-70			3-11-61	A	FORMAT REVISED		

CHART-PULLEY & BELT (V8)

DATE JANUARY 4, 1964
DR. BY JACQUI PERKINS
CHECKED D. LAFOND
APPR.
APPR.

FIRST USED 1965
Oldsmobile Service ILLUSTRATION
SERIES ALL
REV.
PAGE 6-4.3*
PART NO. 387779

AIR CLEANER LABEL ← FRONT	LABEL CLAMP AND COLOR	AIR CLEANER AND COLOR	ENGINE CODE	COMPRESSION RATIO	ENGINE AND COLOR
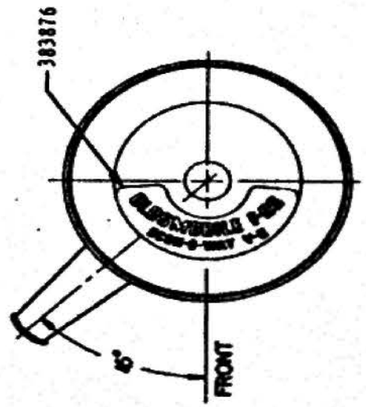	NONE	6410040 6419588 (CALIF.) BLACK		REGULAR FUEL LOW	V-6 (225 CU. IN.) "A" BODY 1 BBL. BLUE
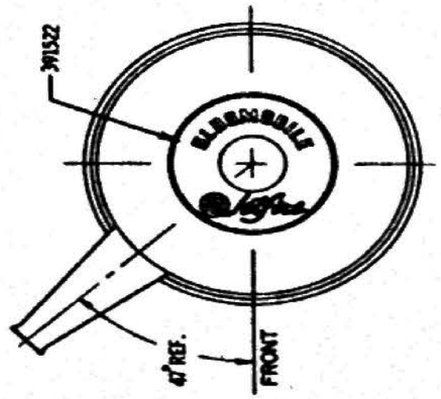	391392 BLACK	6421066 BLACK	QA QB QI QJ QC QK (S)	REGULAR FUEL LOW	654 (330 CU. IN.) "A" BODY 2 BBL. GOLD
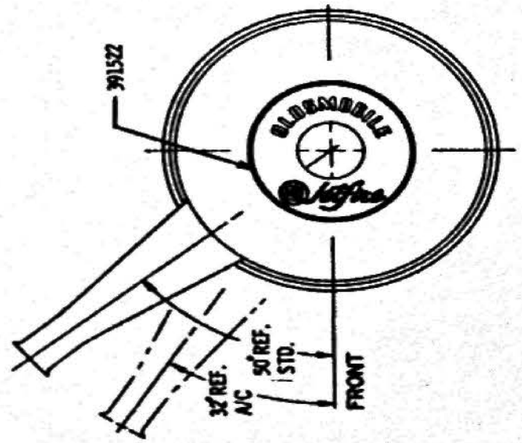	391392 BLACK	6420958 BLACK	TD TL	REGULAR FUEL LOW	654 (330 CU. IN.) "B" BODY 2 BBL. GOLD
			TC TK	EXPORT LOW	
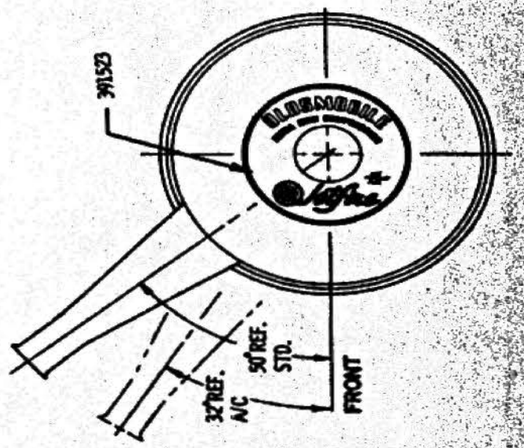	391393 RED	6421460 RED	TA TB TI TJ	STANDARD HIGH	654 (330 CU. IN.) "B" BODY 2 BBL. GOLD

DATE	SYM	REVISION	DR.	CK.	DATE	SYM	REVISION	DR.	CK.	DATE	SYM	REVISION	DR.	CK.
										1-25-65	J	CODE LETTERS ADDED	KS	JA
										1-16-65	R	REDRAWN ON NEW FORMAT AND REVISED	GG	DK

CHART ENGINE APPEARANCE

DATE DEC. 18, 1964
DR. BY GALE GRAY
CHECKED D. LA FOND
APPR.
APPR.

FIRST USED 1965
Oldsmobile Graphic ILLUSTRATION
SERIES ALL
REF.
PAGE 6-5.1
PART NO. 388149

OLDSMOBILE DIVISION GENERAL MOTORS CORPORATION LANSING — MICHIGAN

AIR CLEANER LABEL ← FRONT	LABEL CLAMP AND COLOR	AIR CLEANER AND COLOR	ENGINE CODE	COMPRESSION RATIO	ENGINE AND COLOR
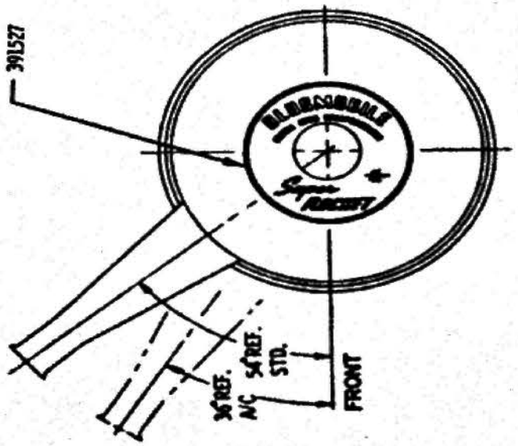	(V) 391393 RED	6421460 RED	(T) UA UB (U) UI	STANDARD HIGH	657 (425 CU. IN.) "B" BODY 2 BBL. RED
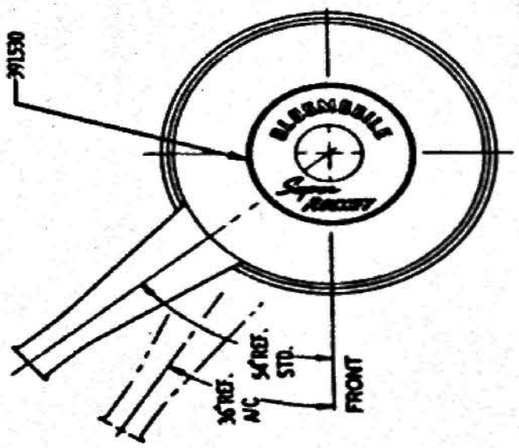	391392 BLACK	6420958 BLACK	UC UD UJ	REGULAR FUEL LOW	657 (425 CU. IN.) "B" BODY 2 BBL. RED
			UE UK	EXPORT LOW	
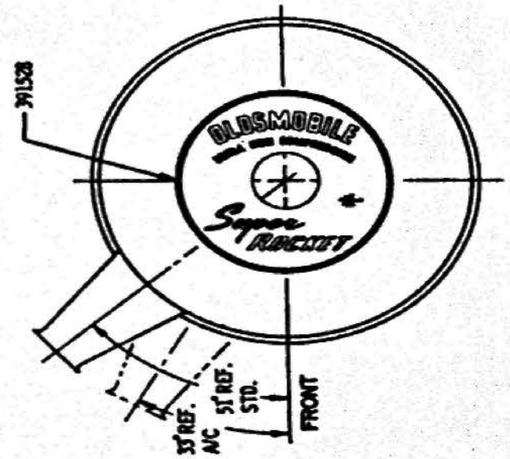	391394 RED	6420815 RED	UN UO UV	STANDARD HIGH	657 (425 CU. IN.) "B & C" BODY 4 BBL. RED
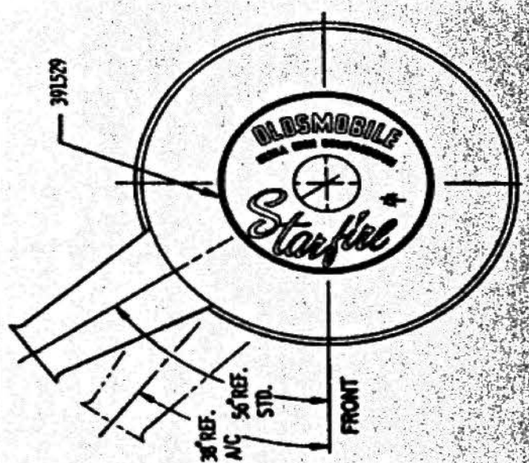	391394 RED	6421461 RED	UP UQ UX	STANDARD HIGH	657 (425 CU. IN.) STARFIRE "B & C" BODY 4 BBL. RED

DATE	SYM	REVISION	DR.	CK.	DATE	SYM	REVISION	DR.	CK.	DATE	SYM	REVISION	DR.	CK.
										1-25-65	V	WAS 391933		JP
										1-25-65	U	WAS QB		JP
										1-25-65	T	WAS QA		JP
										1-16-65	S	REDRAWN ON NEW FORMAT AND REVISED	AG	CK

CHART **ENGINE APPEARANCE**

DATE DEC. 30, 1964
DR. BY GALE GRAY
CHECKED D. LAFOND
APPR.
APPR.

FIRST USED 1965 — Oldsmobile GRAPHIC ILLUSTRATION

SERIES ALL — REF.

PAGE 6-5.2*

PART NO. 388149

AIR CLEANER LABEL ← FRONT	LABEL CLAMP AND COLOR	AIR CLEANER AND COLOR	ENGINE CODE	COMPRESSION RATIO	ENGINE AND COLOR
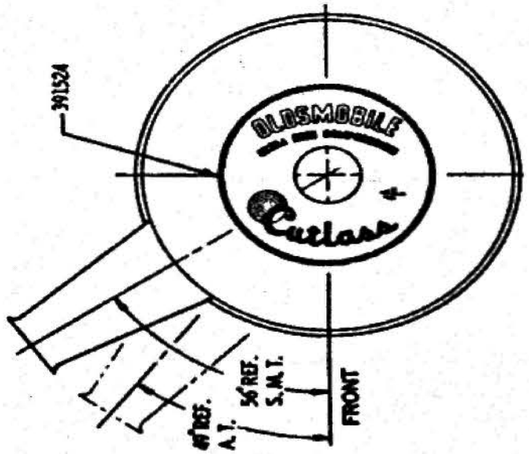	391394 RED	6421461 S.M. 6421815 A.T. RED	ON OP OV OX	STANDARD HIGH	654 (330 CU. IN.) "A" BODY 4 BBL. GOLD
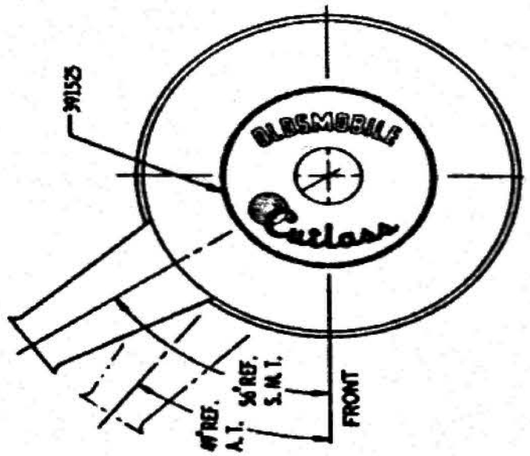	391395 BLACK	6420809 S.M. 6421814 A.T. BLACK	OS OU	REGULAR FUEL LOW	654 (330 CU. IN.) "A" BODY 4 BBL. GOLD
	391394 RED	6421461 S.M. 6421815 A.T. RED	OO OY (N)	EXPORT LOW	
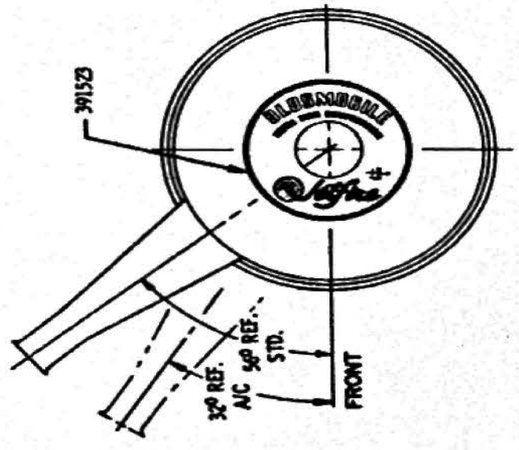	391393 RED	6421531 RED	TN TV TX	STANDARD HIGH	654 (330 CU. IN.) "B" BODY 4 BBL. GOLD
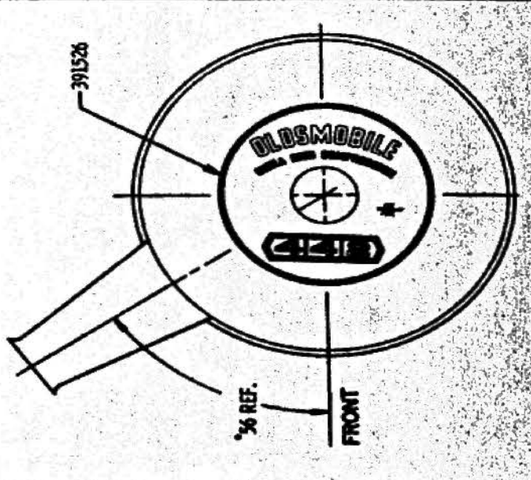	391394 RED	389898 CHROME	OR OW	STANDARD HIGH	658 (400 CU. IN.) "A" BODY 4 BBL. BRONZE

DATE	SYM	REVISION	DR.	CK.	DATE	SYM	REVISION	DR.	CK.	DATE	SYM	REVISION	DR.	CK.
										1-15-65	N	WAS QR		
										1-16-65	AI	REDRAWN ON NEW FORMAT AND REVISED	GG	DK

CHART ENGINE APPEARANCE

DATE DEC. 18, 1964
DR. BY GALE GRAY
CHECKED D. LAFOND
APPR.
APPR.

FIRST USED 1965
Oldsmobile GRAPHIC ILLUSTRATION
SERIES ALL
REV.
PAGE 6-5.3
PART NO. 388149

OLDSMOBILE DIVISION GENERAL MOTORS CORPORATION LANSING -- MICHIGAN

AIR CLEANER LABEL ← FRONT	LABEL CLAMP AND COLOR	AIR CLEANER AND COLOR	ENGINE CODE	COMPRESSION RATIO	ENGINE AND COLOR
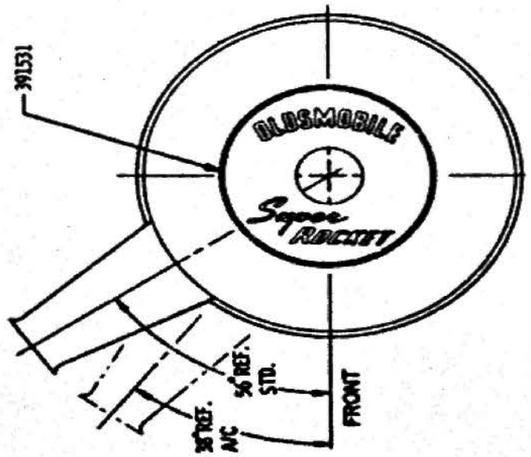	391394 RED	6421461 RED	UR	EXPORT LOW	657 (425 CU. IN.) "C" BODY 4 BBL. RED
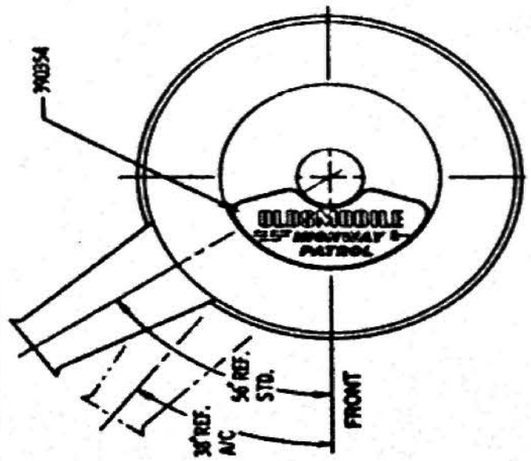	NO CLAMP SELF ADHERING LABEL	6421461 RED	UN UO UV	STANDARD HIGH	657 (425 CU. IN.) HIGHWAY PATROL "B" BODY 4 BBL. RED
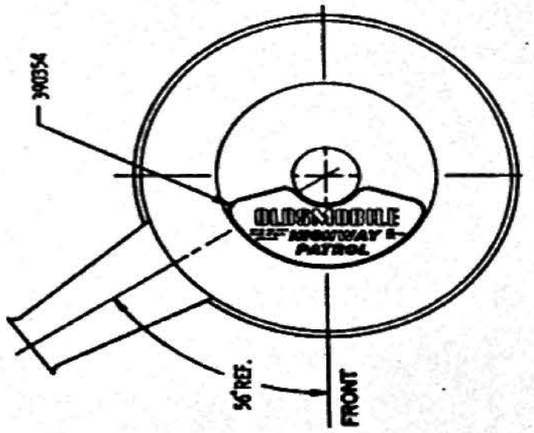	NO CLAMP SELF ADHERING LABEL	6421461 S.M. RED 6421815 A.T. RED	QV QX Ⓐ ON OP Ⓑ	STANDARD HIGH	654 (330 CU. IN.) HIGHWAY PATROL "A" BODY 4 BBL. GOLD
		398698 CHROME	QR QW	STANDARD HIGH	658 (400 CU. IN.) HIGHWAY PATROL "A" BODY 4 BBL. BRONZE
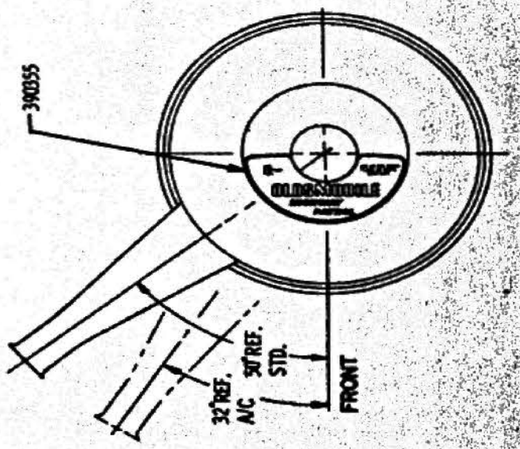	NO CLAMP SELF ADHERING LABEL	6421531 RED	TN TV TX	STANDARD HIGH	654 (330 CU. IN.) HIGHWAY PATROL "B" BODY 4 BBL. GOLD

DATE	SYM	REVISION	DR.	CK.	DATE	SYM	REVISION	DR.	CK.	DATE	SYM	REVISION	DR.	CK.
										4-29-65	B	QR REMOVED		
										4-29-65	A	QW REMOVED		

CHART ENGINE APPEARANCE

DATE DEC. 30, 1964
DR. BY GALE GRAY
CHECKED D. LA FOND
APPR.
APPR.

FIRST USED 1965
Oldsmobile GRAPHIC ILLUSTRATION
SERIES ALL
REF.
PAGE 6-5.4*
PART NO. 388149

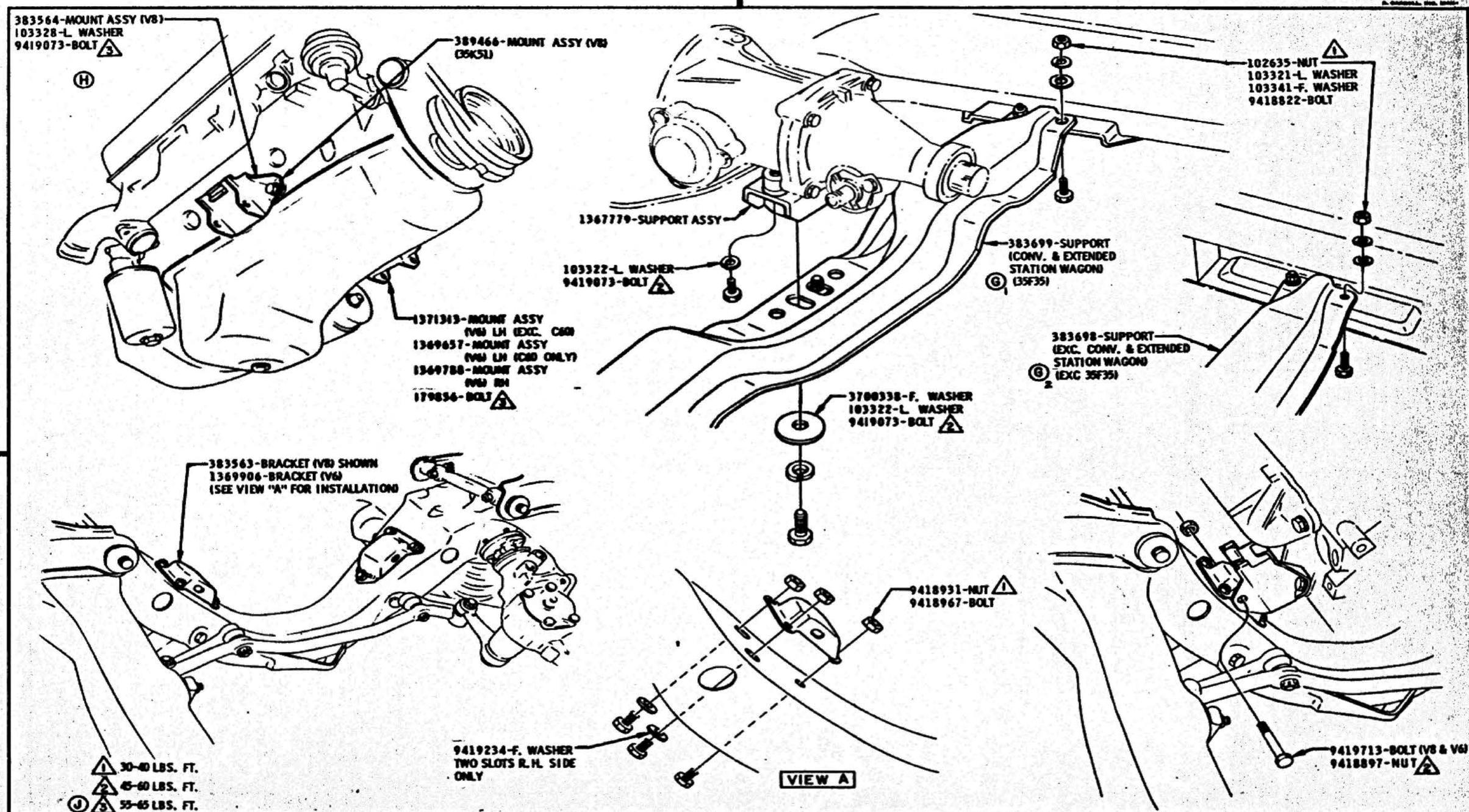

DATE	SYM	REVISION	DR.	CK.	DATE	SYM	REVISION	DR.	CK.	DATE	SYM	REVISION	DR.	CK.
										9-21-64	E	1367779 WAS 386458		
					2-18-65	J	TORQUE NOTE ADDED			9-8-64	D	9420880 BOLT V-6 REMD.		
					1-11-65	N	9419073 BOLT REMOVED			8-12-64	C	35K5L WAS W29		
					12-11-64	G2	35F35 ADDED			6-24-64	B	TORQUE SPEC ADDED		
					9-23-64	F	103328-L. WASH. REM			6-2-64	A	389466-MOUNT ASSY ADDED		

INSTALLATION **POWER PLANT TO FRAME**

DATE MAY 27, 1964
DR. BY GOODWIN-MASON
CHECKED
APPR.
APPR.

FIRST USED 1965 — Oldsmobile GRAPHIC ILLUSTRATION — SERIES F85 — REV. — PAGE 6-6.1 — PART NO. 389265

OLDSMOBILE DIVISION GENERAL MOTORS CORPORATION LANSING 21, MICHIGAN

	PART NUMBER	UPC CODE	PROD. CODE	TRANSMISSION			CARBURETOR			COMPRESSION RATIO					EXHAUST MANIFOLDS			AIR CONDITIONING	SPECIAL ACCESSORIES	
										PISTON										
				SYNCHROMESH	AUTOMATIC		2 BARREL	4 BARREL		EXPORT	REG. FUEL	PRE. FUEL	STARFIRE		"A" BODY					
	388028	M33	QA		X		X				X				X					
	388029	C60	QB		X		X				X				X			X		
	388030	L90	QC		X		X			X					X					
	388031	6	QI	X			X				X				X					
Ⓔ	388032	6	QJ	X			X				X				X				HEAVY DUTY CLUTCH	
	388033	L90	QK	X			X			X					X					
	388034	M33	QN		X			X				X			X					
	388035	L90	QO		X			X		X					X					
Ⓐ	388410	C60	QP		X			X				X			X			X		Ⓑ
Ⓒ																				Ⓕ₂
	389705	M32	QR		X			X				X			X				399.5 CU INCH	Ⓖ₂
Ⓗ₁	390431	L65	QS		X			X			X				X				LOW COMPRESSION	
Ⓗ₂	390430	L65	QU	X				X			X				X				LOW COMPRESSION	
	388036	6	QV	X				X				X			X					
	389704	L78	QW	X				X				X			X				399.5 CU INCH	Ⓖ₁
Ⓔ₂	388037	6	QX	X				X				X			X				HEAVY DUTY CLUTCH	
	388038	L90	QY	X				X		X					X					
Ⓓ																				Ⓕ₁

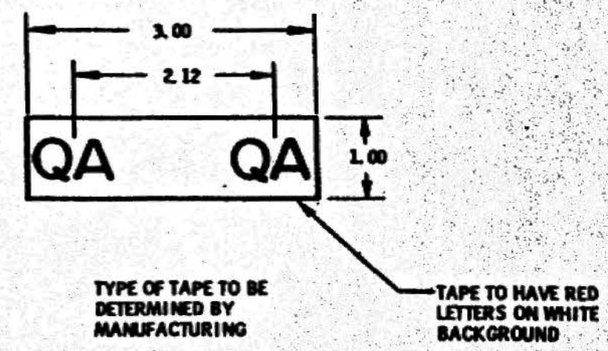

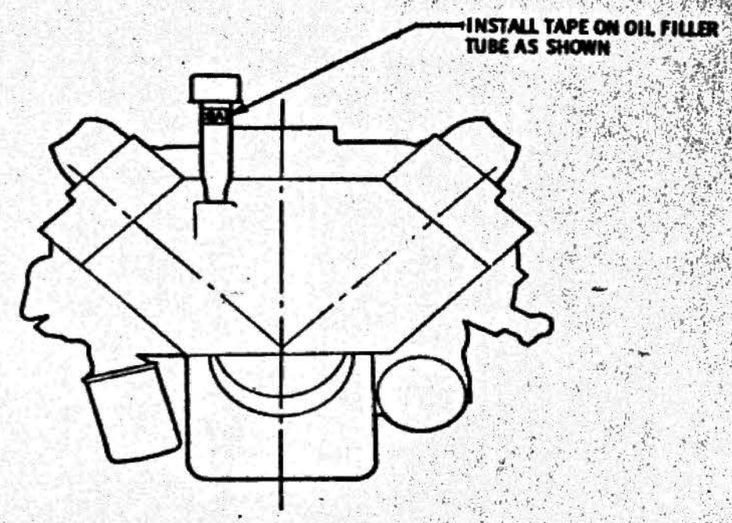

DATE	SYM	REVISION	DR.	CK.	DATE	SYM	REVISION	DR.	CK.	DATE	SYM	REVISION	DR.	CK.
					9-1-64	K₂	L-65 OPTION ADDED			3-15-64	E₂	6 WAS MOI		
					7-1-64	G₂	389704-5 ENGINES ADDED			3-15-64	D	L79 WAS 300		
							ENGINES REMOVED			3-15-64	C	389027 LINE ADDED		
					7-1-64	F₂	388039 & 389027-L79			3-15-64	B	PRE. FUEL INTO MKS ADDED		
										3-2-64	A	388410 LINE ADDED		

DATE FEBRUARY 28, 1964
DR. BY R. ACHTERHOF
CHECKED
APPR.
APPR.

CHART — ENGINE IDENTIFICATION

FIRST USED 1965
SERIES F-85
REV.
ILLUSTRATION
PAGE 6-7.1
PART NO. 388000

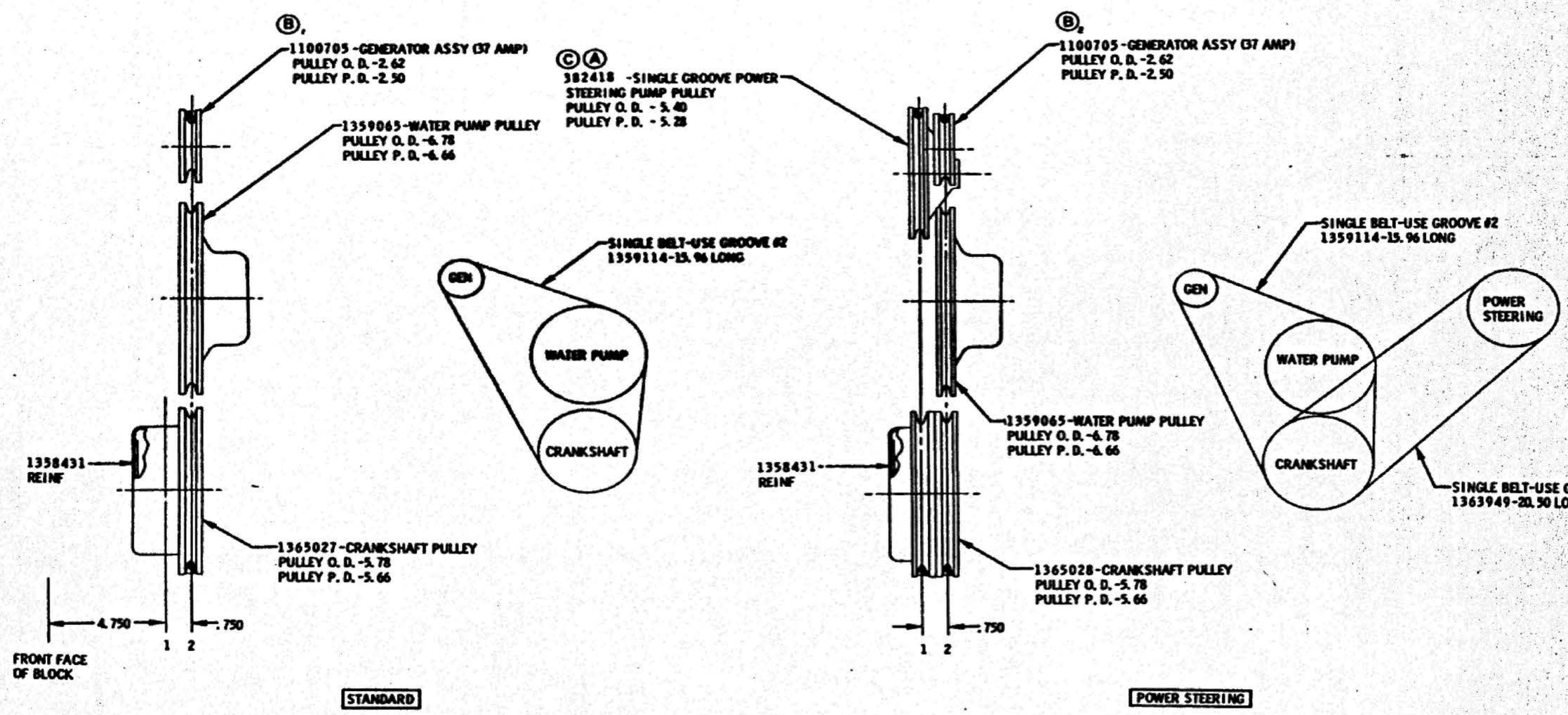

BELTS SHOWN ON THIS DRAWING ARE TO BE CHECKED FOR CORRECT TENSION WITH A BURROUGHS GAGE #33-70 AFTER ROLL TEST

DATE	SYM	REVISION	DR.	CK.	DATE	SYM	REVISION	DR.	CK.	DATE	SYM	REVISION	DR.	CK.
										10-30-64	C	NAS 1362235	JK	JF
										10-7-64	B	NAS 1100665		
										9-1-64	A	1362235 NAS 1370857		

CHART-PULLEY & BELT (V6)

DATE JUNE 9, 1964
DR. BY R. HOOVER
CHECKED
APPR.
APPR.

FIRST USED 1965

Oldsmobile ILLUSTRATION

SERIES F-85

REV.

PAGE 6-8.1

PART NO. 388275

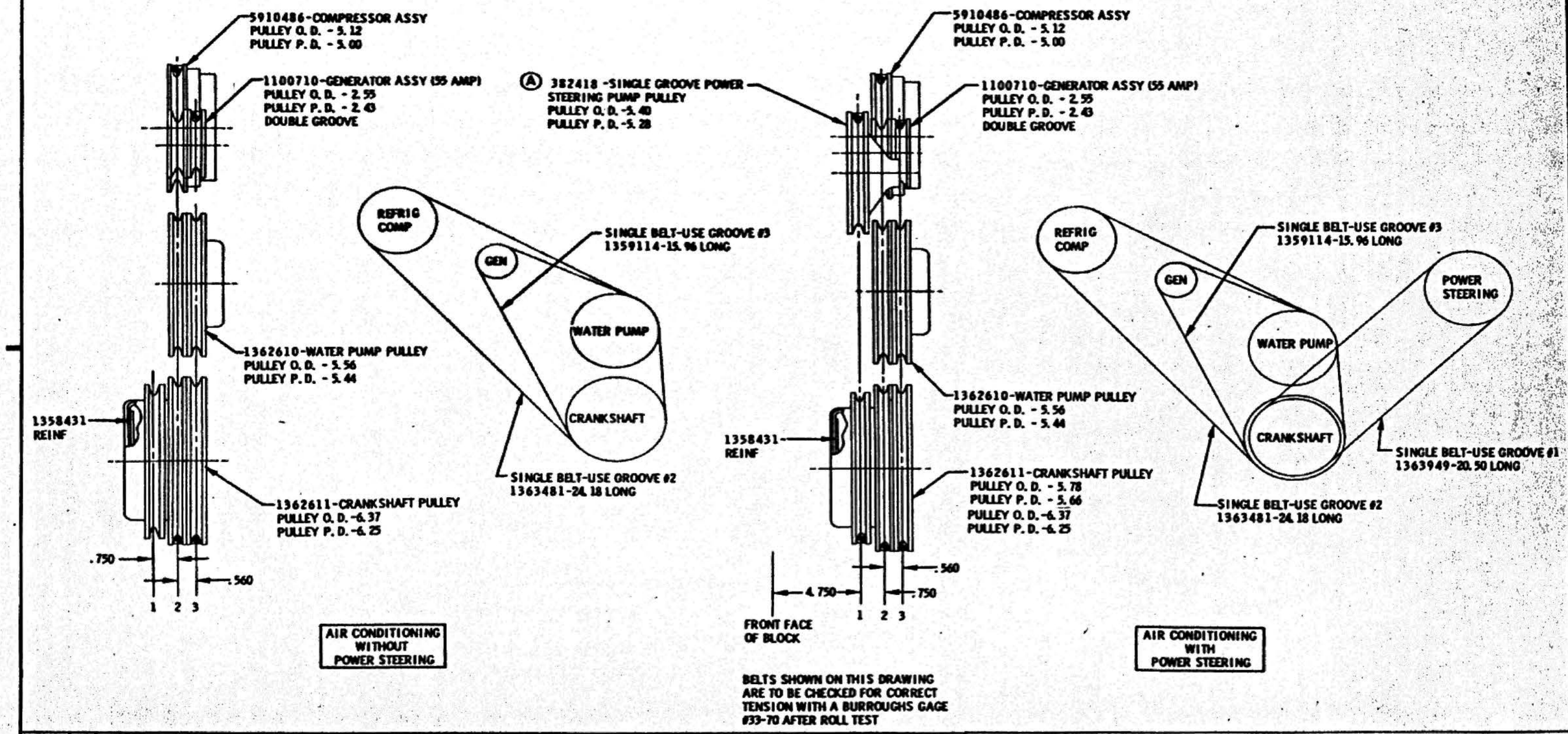

BELTS SHOWN ON THIS DRAWING ARE TO BE CHECKED FOR CORRECT TENSION WITH A BURROUGHS GAGE #33-70 AFTER ROLL TEST

DATE	SYM	REVISION	DR.	CK.	DATE	SYM	REVISION	DR.	CK.	DATE	SYM	REVISION	DR.	CK.
										0-30-69	A	HAS 1370987	JC	JR

CHART-PULLEY & BELT (V6)			
DATE JUNE 9, 1964	FIRST USED 1965	Oldsmobile Graphic Illustration	PAGE 6-8.2
DR. BY R. HOOVER			
CHECKED R. Bernhart	SERIES F-85	REF.	PART NO. 388275
APPR.			
APPR.			

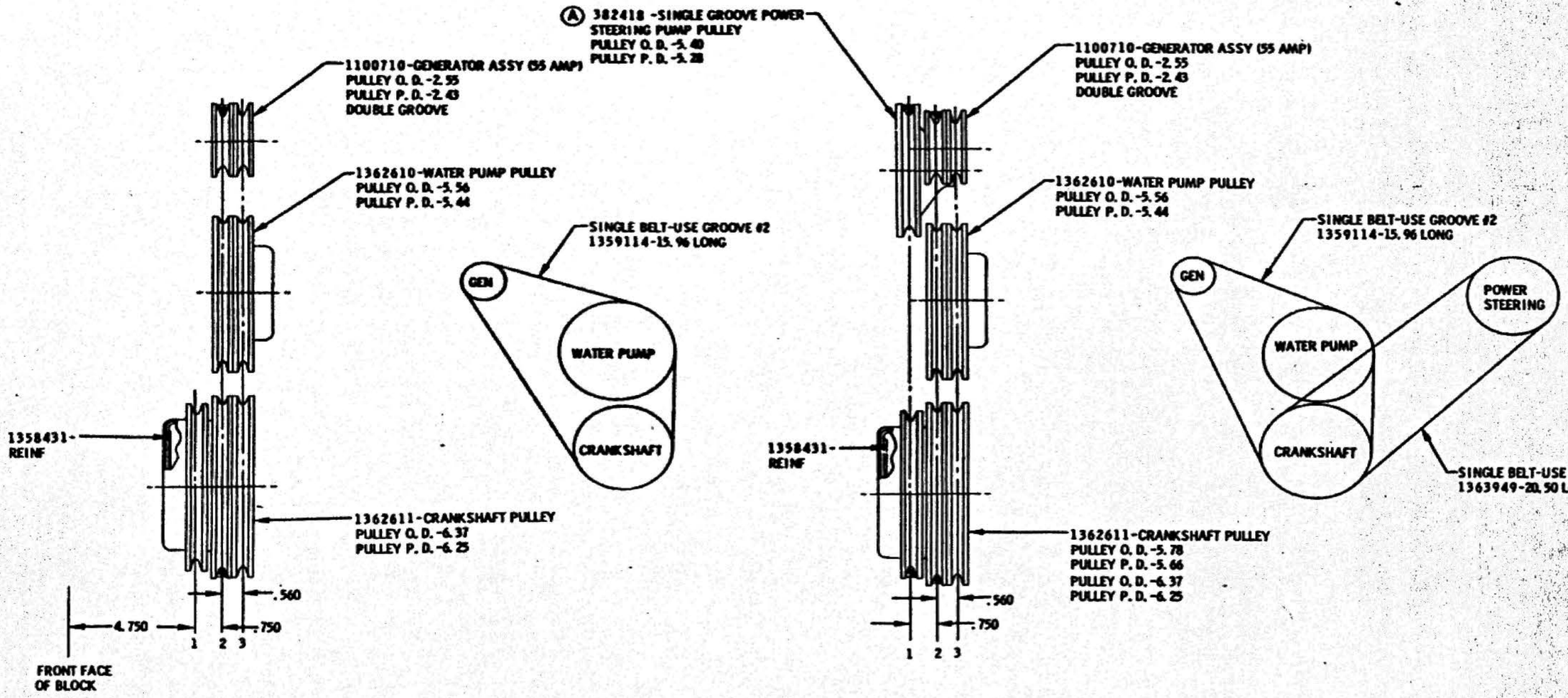

H. D. GEN & ENGINE COOLING WITHOUT POWER STEERING

H. D. GEN & ENGINE COOLING WITH POWER STEERING

BELTS SHOWN ON THIS DRAWING ARE TO BE CHECKED FOR CORRECT TENSION WITH A BURROUGHS GAGE #33-70 AFTER ROLL TEST

DATE	SYM	REVISION	DR.	CK.	DATE	SYM	REVISION	DR.	CK.	DATE	SYM	REVISION	DR.	CK.
										10-30-69	A	MAS 1370987	C.J.C.	J.P.

CHART-PULLEY & BELT (V6)

DATE JUNE 9, 1964
DR. BY R. HOOVER
CHECKED
APPR.
APPR.

FIRST USED 1965

Oldsmobile Service ILLUSTRATION

PAGE 6-8.3

DIVISION F-85

REF.

PART NO. 388275

THROTTLE CONTROL

DRAWING NO.	DRAWING NAME	PAGE NO.
387291	THROTTLE CONTROL (V6)	6N - 2.1
387276	THROTTLE CONTROL (V8)	6N - 3.1
388781	V8 THROTTLE CONTROL ADJUSTMENT CHART	6N - 4.1
389250	V6 THROTTLE CONTROL ADJUSTMENT CHART	6N - 5.1

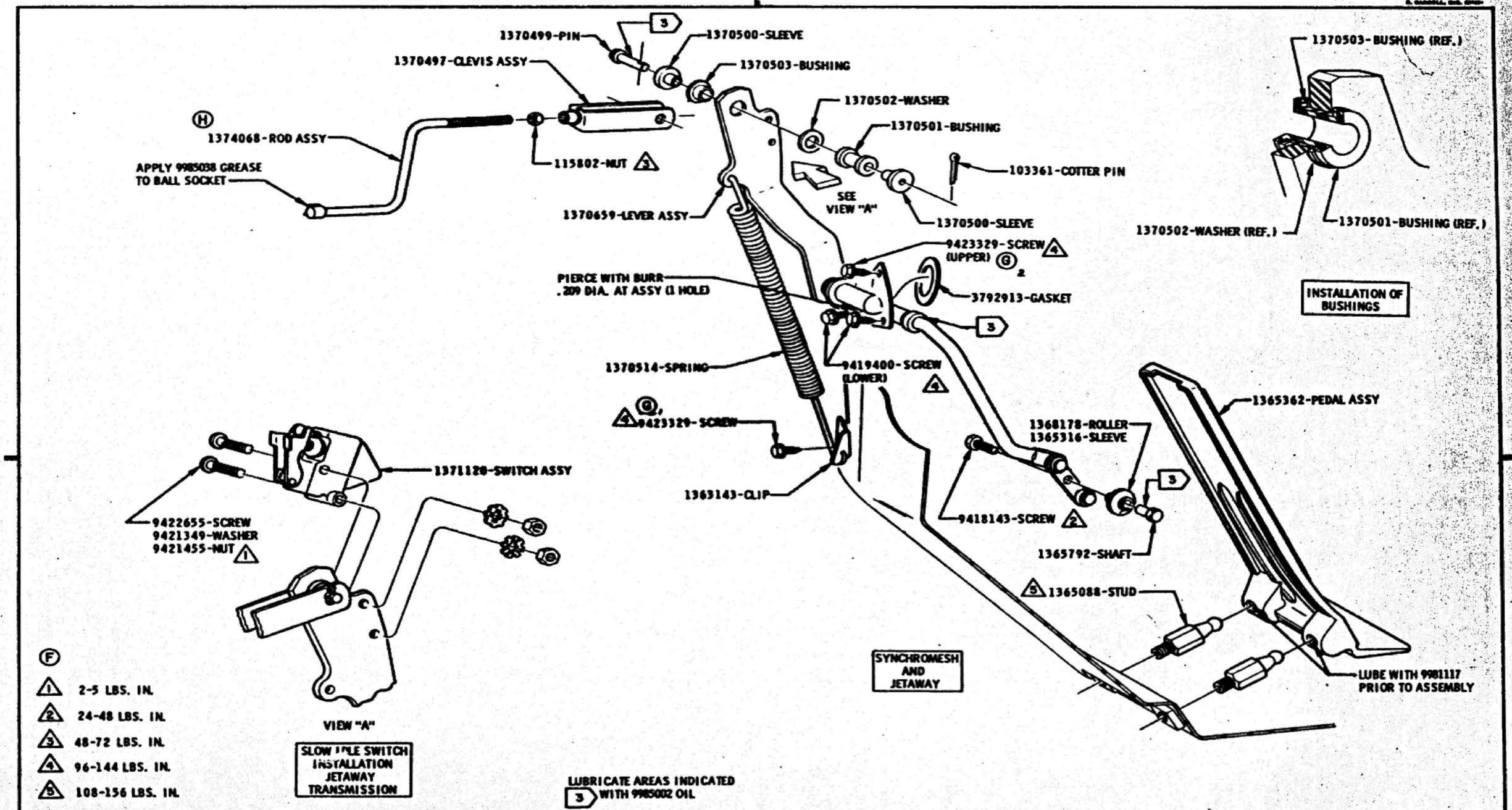

DATE	SYM	REVISION	DR.	CK.	DATE	SYM	REVISION	DR.	CK.	DATE	SYM	REVISION	DR.	CK.
										11-23-64	E	LUBE NOTE ADDED		
										6-20-64	D	VIEW REVISED		
					2-27-65	H	WAS 1365869 ROD ASSY			7-21-64	C	NOTE ADDED		
					2-27-65	G	FASTENINGS REVISED			6-24-64	B	VIEW "A" REVISED		
					11-25-64	F	TORQUE SPECS ADDED			5-19-64	A	REVISED & REDRAWN		

INSTALLATION **THROTTLE CONTROL (V-6)**

DATE FEB. 12, 1964
DR. BY PIONEER T.D.
CHECKED D. TITUS
APPR.
APPR.

FIRST USED 1965
Oldsmobile GRAPHIC ILLUSTRATION
SERIES F-85
REF.
PAGE 6N-2.1
PART NO. 387291

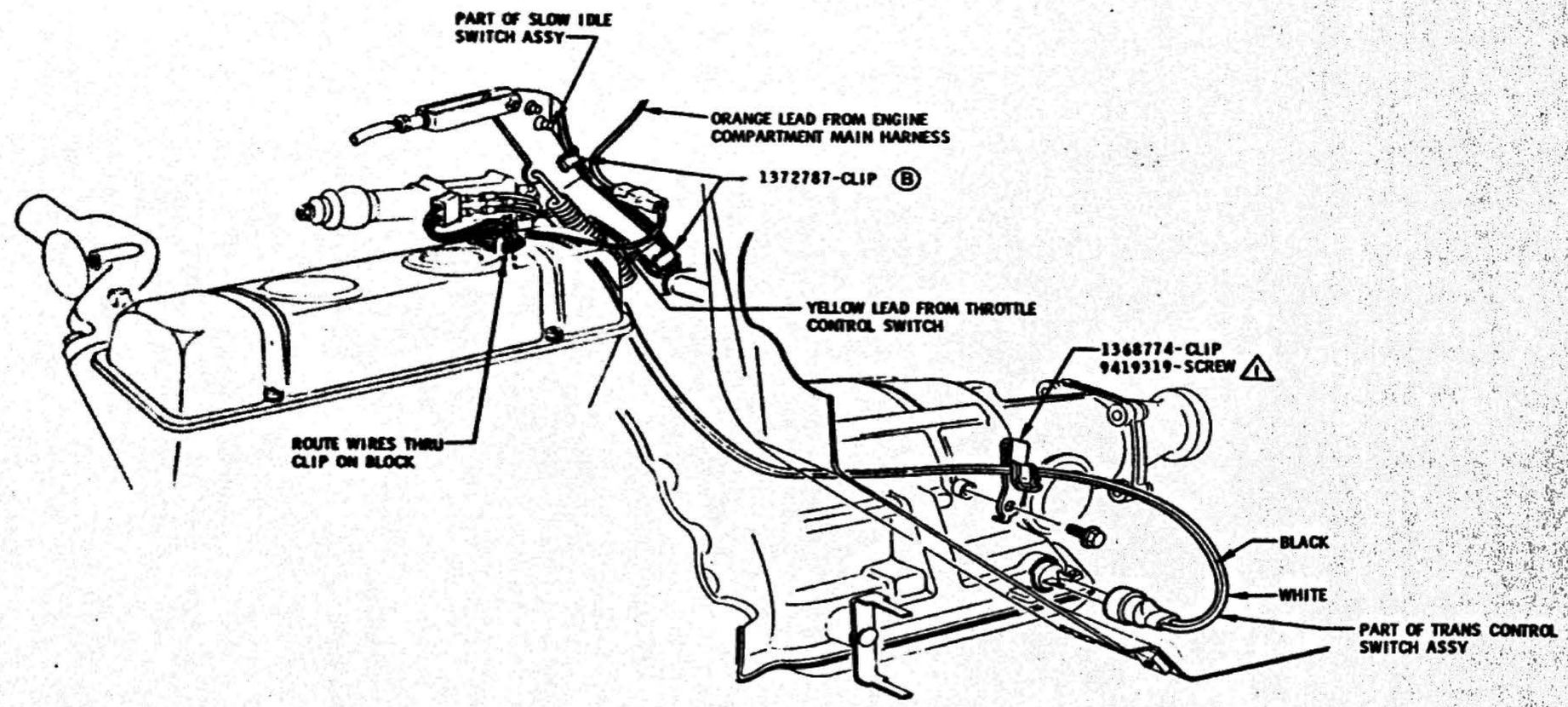

WIRE ROUTING
JETAWAY TRANSMISSION

© △1 30-60 LBS. IN.

DATE	SYM	REVISION	DR.	CK.	DATE	SYM	REVISION	DR.	CK.	DATE	SYM	REVISION	DR.	CK.
										11-23-64	C	TORQUE SPEC ADDED		
										8-24-64	B	1372787-CLIP ADDED		
										5-1964	A	REVISED & REDRAWN		

INSTALLATION: THROTTLE CONTROL (V-6)

DATE FEB 12, 1964
DR. BY PIONEER T.D.
CHECKED D. TITUS
APPR.
APPR.

FIRST USED 1965
Oldsmobile Service Illustration
PAGE 6N-2.2
GROUP F-85
REF.
PART NO. 387291

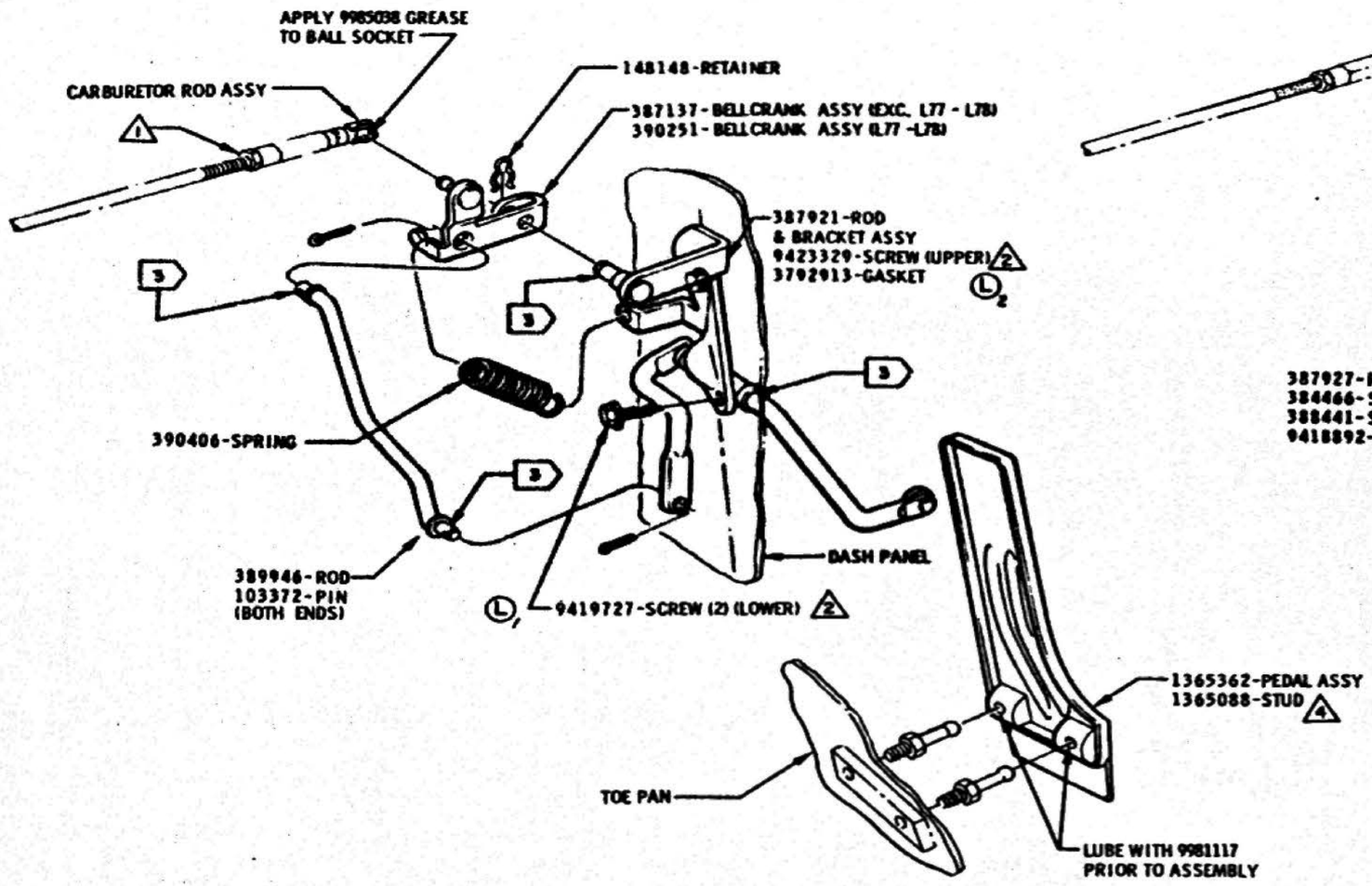

SYNCHROMESH INSTALLATION

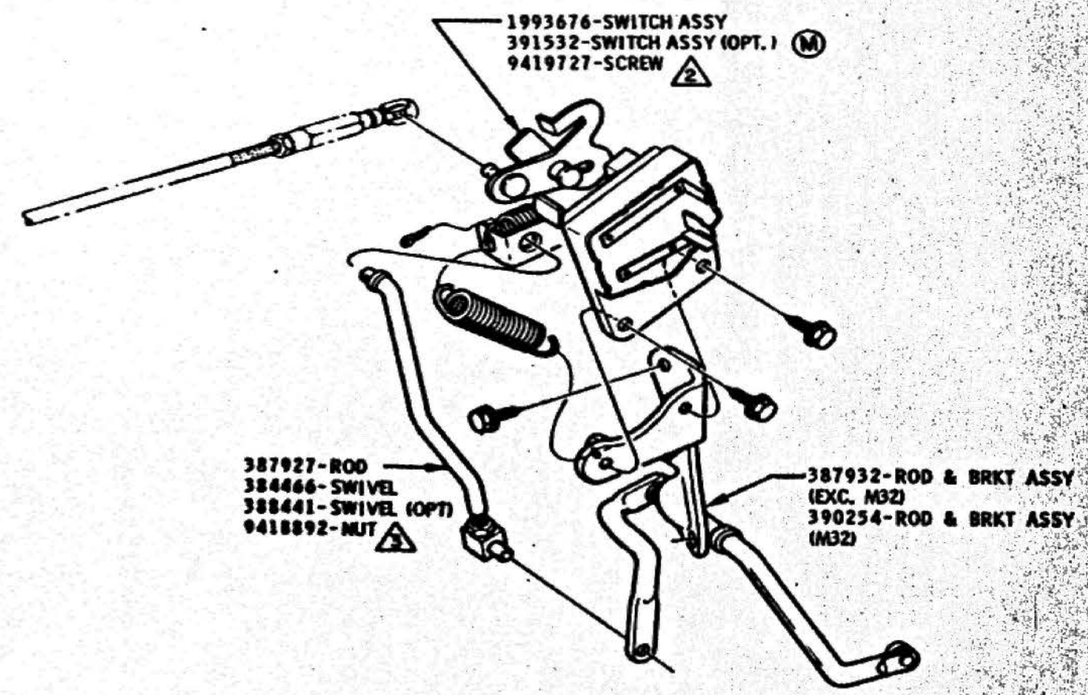

JETAWAY INSTALLATION

(SAME AS SM EXC. AS SHOWN)

(K)

1. 48-72 LBS. IN.
2. 72-94 LBS. IN.
3. 96-132 LBS. IN.
4. 108-156 LBS. IN.

LUBRICATE AREAS INDICATED WITH 9985002 OIL (3)

V8 MODELS

DATE	SYM	REVISION	DR.	CK.	DATE	SYM	REVISION	DR.	CK.	DATE	SYM	REVISION	DR.	CK.
					11-23-64	J	LUBE NOTE ADDED			8-11-64	E	PART NUMBERS ADDED		
					9-30-64	H	WAS 387141-SPRING			7-21-64	D	389946 WAS 387926		
9-9-65	M	WAS 387165-SWITCH ASSY			9-14-64	G	WAS 384441 SWIVEL			7-2-64	C	NOTE REMOVED		
2-1-65	L	FASTENNUSS REWISED					WAS 387926 ROD ASSY			6-22-64	B	NOTE ADDED		
11-23-64	K	TORQUE SPECS ADDED			9-2-64	F	PART NOS. ADDED			4-17-64	A	EXPLOSION LINES REVISED		

INSTALLATION **THROTTLE CONTROL**

DATE MARCH 17, 1964
DR. BY BEACHNAU & McDONALD
CHECKED
APPR.
APPR.

FIRST USED 1965

Oldsmobile GRAPHIC ILLUSTRATION

GROUP F85

SECT. 6N TR-4971

PAGE 6N-3.1

PART NO. 387276

I. SLOW IDLE ADJUSTMENT

A. REQUIRED CONDITIONS
1. ENGINE TO BE WARM.
2. THROTTLE RETURN SPRING TO BE EFFECTIVELY HOLDING THROTTLE LEVER AGAINST SLOW IDLE ADJUSTING SCREW STOP.
3. WHILE SETTING IDLE ON CARS EQUIPPED WITH JT TRANSMISSION, CARBURETOR ROD IS TO HAVE A PRELIMINARY ADJUSTMENT SO THAT THE "HI ANGLE" VARIABLE VANE FUNCTION (BLACK WIRE) IS ENERGIZED.

B. ADJUSTMENT
1. ADJUST THE SLOW IDLE SCREW TO OBTAIN THE FOLLOWING R. P. M.

TRANS.	AIR COND.	RANGE	R. P. M.
SM & FS -ALL	WITHOUT	N	600
SM & FS -ALL	WITH	N	600 *
JT-EXC. L77 & L78	WITHOUT	DR	500
JT-EXC. L77 & L78	WITH	DR	550 *
JT-WITH L77 & L78	WITHOUT	DR	550
JT-WITH L77 & L78	WITH	DR	600 *

* AIR CONDITIONING "OFF" AND THE COMPENSATOR CARB-AIRATOR VALVE HELD CLOSED.

II. FAST IDLE ADJUSTMENT

A. REQUIRED CONDITIONS
1. TRANSMISSION IN NEUTRAL.
2. ENGINE TO BE WARM.
3. THROTTLE RETURN SPRING LOAD TO BE EFFECTIVELY HOLDING THROTTLE LEVER FAST IDLE SCREW ON PROPER STEP OF FAST IDLE CAM.

B. ADJUSTMENT
1. ADJUST FAST IDLE WITH SCREW ON LOWEST STEP OF FAST IDLE CAM AND RESTING ON RISE TO NEXT HIGHER STEP TO OBTAIN THE FOLLOWING R. P. M.

CARB.	TRANS.	CAM STEP	R. P. M.
2	SM, FS & JT	LOW	900
4	SM, FS & JT	LOW	1000

III. CARBURETOR ROD ADJUSTMENT

A. REQUIRED CONDITIONS
1. SLOW IDLE TO BE PROPERLY ADJUSTED.
2. FAST IDLE CAM POSITIONED TO ALLOW THROTTLE RETURN SPRING TO HOLD THROTTLE LEVER IN "SLOW IDLE" POSITION.

B. ADJUSTMENT SM & FS CARS
1. ADJUST CARBURETOR ROD TO OBTAIN A DIMENSION OF 4.32 ± .060 FROM A PERPENDICULAR TO THE FLOOR PAN UNDER THE ACCELERATOR TO THE CENTER OF THE ROLLER ON THE ACCELERATOR LEVER.
2. HORIZONTAL SURFACE OF BELLCRANK WILL BE EVEN WITH TOP HORIZONTAL SURFACE OF ROD & BRACKET ASSEMBLY.

C. ADJUSTMENT JT CARS
1. ADJUST CARBURETOR ROD LONG UNTIL VARIABLE VANE FUNCTION (BLACK WIRE) IS NOT ENERGIZED. NEXT, SLOWLY SHORTEN ROD UNTIL CIRCUIT IS JUST ENERGIZED. CONTINUE TO SHORTEN ROD TWO COMPLETE TURNS FURTHER AND TIGHTEN LOCK NUT

IV. ACCELERATOR ROD ADJUSTMENT JT CARS ONLY

A. REQUIRED CONDITIONS
1. SLOW IDLE SPEED AND CARBURETOR ROD PROPERLY ADJUSTED.
2. FAST IDLE CAM POSITIONED TO ALLOW THROTTLE RETURN SPRING TO HOLD THROTTLE LEVER IN "SLOW IDLE" POSITION.

B. ADJUSTMENT
1. ADJUST ACCELERATOR ROD TO OBTAIN A DIMENSION OF 4.32 ± .060 FROM A PERPENDICULAR TO THE FLOOR PAN UNDER THE ACCELERATOR TO THE CENTER OF THE ROLLER ON THE ACCELERATOR LEVER.

V. THROTTLE SWITCH DOWNSHIFT CIRCUIT ADJUSTMENT JT CARS ONLY

A. REQUIRED CONDITIONS
1. SLOW IDLE SPEED, CARBURETOR ROD AND ACCELERATOR ROD PROPERLY ADJUSTED.

B. ADJUSTMENT
1. PERFORM THE FOLLOWING PROCEDURE TO PREPOSITION THE INTERNAL SWITCH:

   DELCO-REMY SWITCH - MOVE LEVER UNDER TENSION SPRING ON SWITCH BODY TO EXTREME FORWARD POSITION.

   LITTLEFUSE SWITCH - DISCONNECT CARBURETOR ROD AND MOVE LEVER ON SWITCH IN CLOSED THROTTLE DIRECTION UNTIL LEVER HITS STOP. CONNECT CARBURETOR ROD WITHOUT MOVING LEVER TO WIDE OPEN THROTTLE POSITION.

2. PUSH ACCELERATOR PEDAL TO WIDE OPEN POSITION

VI. DASHPOT ADJUSTMENT JT CARS ONLY - 4 BBL.

A. REQUIRED CONDITIONS
1. FAST IDLE SET AT 1000 R. P. M. ON LOWEST STEP OF FAST IDLE CAM AND SCREW RESTING ON RISE TO NEXT HIGHER STEP.
2. ENGINE OFF AND FAST IDLE SCREW ON HIGHEST STEP.

B. ADJUSTMENT
1. ADJUST DASHPOT SO IT JUST CONTACTS THROTTLE LEVER.

VII. DASHPOT ADJUSTMENT JT CARS ONLY - 2 BBL.

A. REQUIRED CONDITIONS
1. SLOW IDLE SET.
2. ENGINE OFF, DASHPOT FULLY COMPRESSED.

B. ADJUSTMENT
1. ADJUST DASHPOT FOR .060 CLEARANCE BETWEEN DASHPOT AND THROTTLE LEVER.

- ALTERNATE METHOD -

A. REQUIRED CONDITIONS
1. THROTTLE VALVES HELD AT CLOSED BORE.
2. DASHPOT FULLY COMPRESSED.

B. ADJUSTMENT
1. ADJUST SO THAT DASHPOT JUST CONTACTS THROTTLE LEVER.

2 & 4 BBL

DATE	SYM	REVISION	DR.	CK.	DATE	SYM	REVISION	DR.	CK.	DATE	SYM	REVISION	DR.	CK.
										7-25-64	E	JT DASHPOT [illegible] ADDED	[illegible]	[illegible]
										7-15-64	D	NOTE ADDED	[illegible]	[illegible]
										7-15-64	C	NOTES REVISED	[illegible]	[illegible]
										7-15-64	B	NOTE REVISED	[illegible]	[illegible]
					9-17-64	F	WAS ONE COMPLETE TURN	[illegible]	[illegible]	6-20-64	A	NOTES REVISED	[illegible]	[illegible]

CHART-THROTTLE CONTROL ADJUSTMENT

DATE APRIL 10, 1964
DR. BY P. STUMP
CHECKED W. L. WEISS
APPR. [illegible]
APPR.

FIRST USED 1965
Oldsmobile Chart Illustration
SERIES F85 V-8
REF. SM, FS & JT
PAGE 6N-4.1
PART NO. 388781

I. IDLE SWITCH ADJUSTMENT - J.T. CARS ONLY
- A. REQUIRED CONDITIONS
  1. THROTTLE RETURN SPRING TO BE EFFECTIVELY HOLDING CARBURETOR IN CLOSED THROTTLE POSITION.
  2. SWITCH ATTACHING SCREWS LOOSE.
- B. ADJUSTMENT
  1. ROTATE SWITCH ABOUT BOTTOM SCREW TOWARD FRONT OF CAR UNTIL SWITCH STOP SCREW BOTTOMS AGAINST CASE.
  2. HOLD SWITCH IN THIS POSITION AND TIGHTEN ATTACHING SCREWS.

II. TRANSMISSION CONTROL SWITCH ADJUSTMENT - J.T. CARS ONLY
- A. REQUIRED CONDITIONS
  1. CARBURETOR LEVER HELD AT WIDE OPEN POSITION.
  2. SWITCH PLUNGER PUSHED IN UNTIL IT BOTTOMS OUT.
- B. ADJUSTMENT
  1. ADJUST LINK UNTIL IT WILL SLIP OVER CARBURETOR LEVER PIN, THEN SCREW LINK INTO PLUNGER 1 1/2 TURNS.
  2. TIGHTEN LOCK NUT.

III. SLOW IDLE ADJUSTMENT S.M. & J.T. CARS
- A. REQUIRED CONDITIONS
  1. ENGINE TO BE WARM.
  2. THROTTLE RETURN SPRING TO BE EFFECTIVELY HOLDING THROTTLE LEVER AGAINST SLOW IDLE ADJUSTING SCREW STOP.
  3. IDLE SWITCH PROPERLY ADJUSTED ON CARS EQUIPPED WITH J.T. TRANSMISSION.
- B. ADJUSTMENT
  1. ADJUST THE SLOW IDLE SCREW TO OBTAIN THE FOLLOWING R.P.M.

TRANS.	AIR COND.	RANGE	R.P.M.
S.M.	WITHOUT	N	600
S.M.	WITH	N	*
J.T.	WITHOUT	DR	600
J.T.	WITH	DR	*

* REFER TO 386023 SH. #27 - V6 AIR CONDITIONING INSTALLATION DRAWING FOR INSTALLATION AND ADJUSTMENT INSTRUCTIONS WITH IDLE SPEED-UP. CONTROL ON AIR CONDITIONED CARS.

IV. ACCELERATOR LINKAGE ADJUSTMENT - S.M. & J.T. CARS
- A. REQUIRED CONDITIONS
  1. SLOW IDLE SPEED PROPERLY ADJUSTED.
  2. THROTTLE RETURN SPRING EFFECTIVELY HOLDING THE CARBURETOR LEVER IN "SLOW IDLE" POSITION.
- B. ADJUSTMENT
  1. ADJUST SWIVEL ON THROTTLE OPERATING ROD TO GIVE 4.29 ± .060 FROM CENTERLINE OF SWIVEL TO TOP OF WELL IN DASH. (BREAK LINE OF LOWER VERTICAL AND UPPER TAPERED SURFACES OF DASH, DIRECTLY IN BACK OF SWIVEL.)

V. DASHPOT ADJUSTMENT - J.T. CARS ONLY
- A. REQUIRED CONDITIONS
  1. SLOW IDLE SPEED PROPERLY ADJUSTED.
  2. THROTTLE RETURN SPRING EFFECTIVELY HOLDING THE CARBURETOR LEVER IN "SLOW IDLE" POSITION.
- B. ADJUSTMENT
  1. ADJUST DASHPOT UNTIL PLUNGER CONTACTS THROTTLE LEVER, TURN 4 ADDITIONAL TURNS TOWARD THROTTLE LEVER. TIGHTEN LOCK NUT.

Ⓐ

DATE	SYM	REVISION	DR	CK	DATE	SYM	REVISION	DR	CK	DATE	SYM	REVISION	DR.	CK.
										9-14-64	A	ADDED NOTE	CPW	RP

CHART-THROTTLE CONTROL ADJUSTMENT

DATE MAY 18, 1964 — DR. BY BETTY KANE — CHECKED W. L. WEIGS — APPR. H. R. Howard — APPR.

FIRST USED 1965 — Oldsmobile Engineering Illustration — DESIGN F-85 V-6 — REF. SM & JT — PART NO. 389250 — PAGE 6N-5.1

TRANSMISSION

DRAWING NO.	DRAWING NAME	PAGE NO.
387271	S.M. TRANSMISSION & CONTROL (3S COLUMN SHIFT)	7 - 2.1
387272	S.M. TRANSMISSION & CONTROL (3S FLOOR SHIFT)	7 - 3.1
387273	S.M. TRANSMISSION & CONTROL (4S FLOOR SHIFT)	7 - 4.1
		7 - 5.1
387267	V8 CLUTCH CONTROL	7 - 6.1
387292	V6 CLUTCH CONTROL	7 - 7.1
387275	JETAWAY SHIFT CONTROL	7 - 8.1
387274	V6 S.M. SHIFT CONTROL	7 - 9.1
387284	JETAWAY TRANSMISSION	7 - 10.1
387440	JETAWAY TRANSMISSION PIPES	7 - 11.1
388366	TRANSMISSION USAGE CHART	7 - 12.1

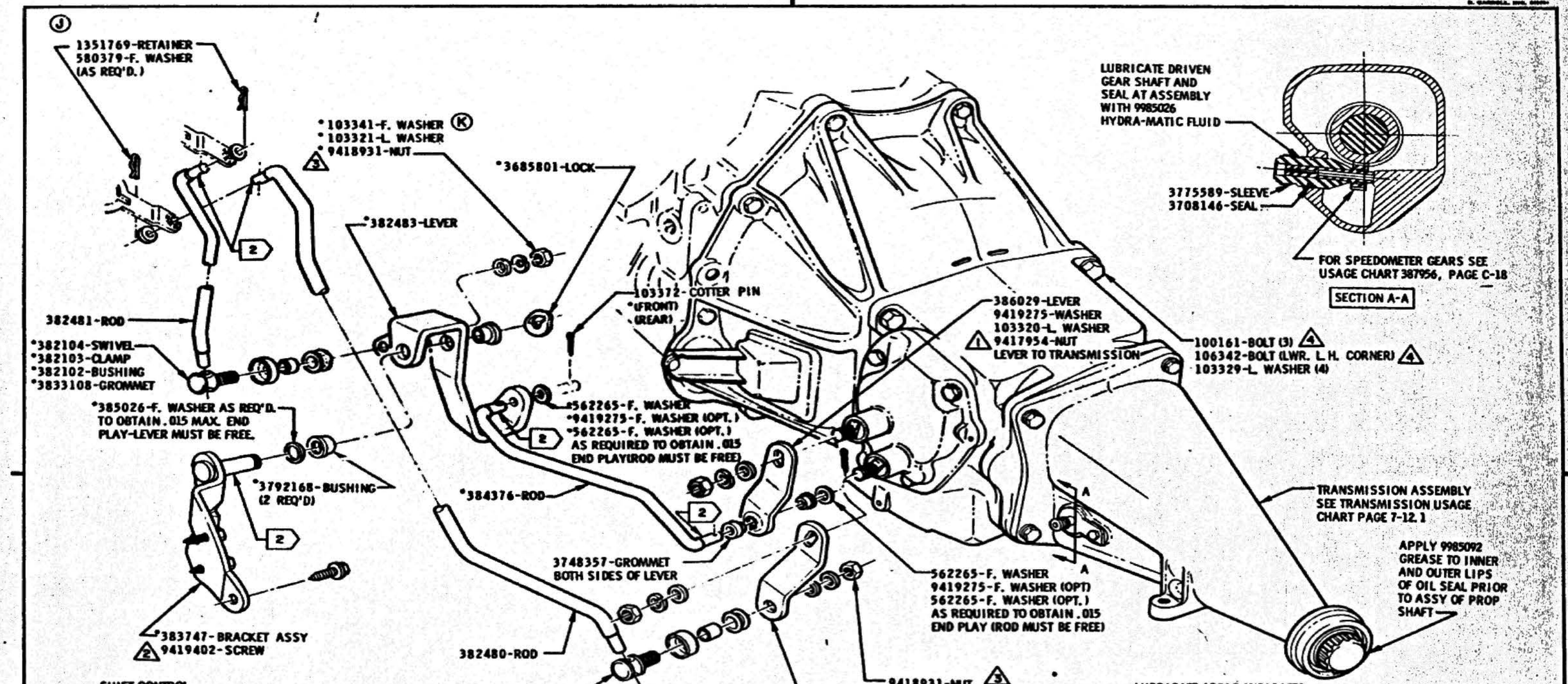

SHIFT CONTROL LINKAGE ADJUSTMENT

1. SET TRANSMISSION SHIFT LEVERS IN RESPECTIVE NEUTRAL DETENTS.
2. WITH SWIVELS LOOSE, INSERT TOOL WITH 3/16" DIA. GAGE PIN IN STEERING COLUMN SHIFT LEVERS.
3. TIGHTEN NUTS ON SWIVELS ON LOWER END OF SHIFT RODS.

LUBRICATE AREAS INDICATED 2 WITH 9985038 GREASE

FILL THRU FILLER HOLE ON R. H. SIDE OF TRANS WITH 2.00 PINTS OF 9985113 OIL THEN REINSTALL FILLER PLUG TO 35-40 LBS. FT.

H
1 96-132 LBS. IN.
2 120-180 LBS. IN.
3 16-26 LBS. FT.
4 60-70 LBS. FT.

* PART OF 388359-BRACKET SHOP ASSY (FOR B.O.P. PLANTS ONLY)

V8 ENGINE

DATE	SYM	REVISION	DR.	CK.	DATE	SYM	REVISION	DR.	CK.	DATE	SYM	REVISION	DR.	CK.
					4-27-65	K	WAS 382105 F. WASHER			7-27-64	E	BOP INFO ADDED		
					2-23-65	J	WAS 9749084			7-21-64	D	TRANSMISSION NO. REMOVED		
					11-23-64	H	TORQUE SPECS ADDED			7-2-64	C	WAS 3855717-TRANS ASSY		
					11-23-64	G	LUBRICATION NOTE ADDED			5-6-64	B	3855717 WAS 1368942		
					8-18-64	F	NOTE ADDED			3-19-64	A	9417954 NUT NRS 9419275		

INSTALLATION S.M. TRANSMISSION & CONTROL (3S COLUMN SHIFT)

DATE FEB. 12, 1964
DR. BY PIONEER TECH DATA
CHECKED D. TITUS
APPR.
APPR.

FIRST USED 1965
Oldsmobile GRAPHIC ILLUSTRATION
SERIES F85
REF TR-4468 TR-3991
PAGE 7-2.1
PART NO. 387271

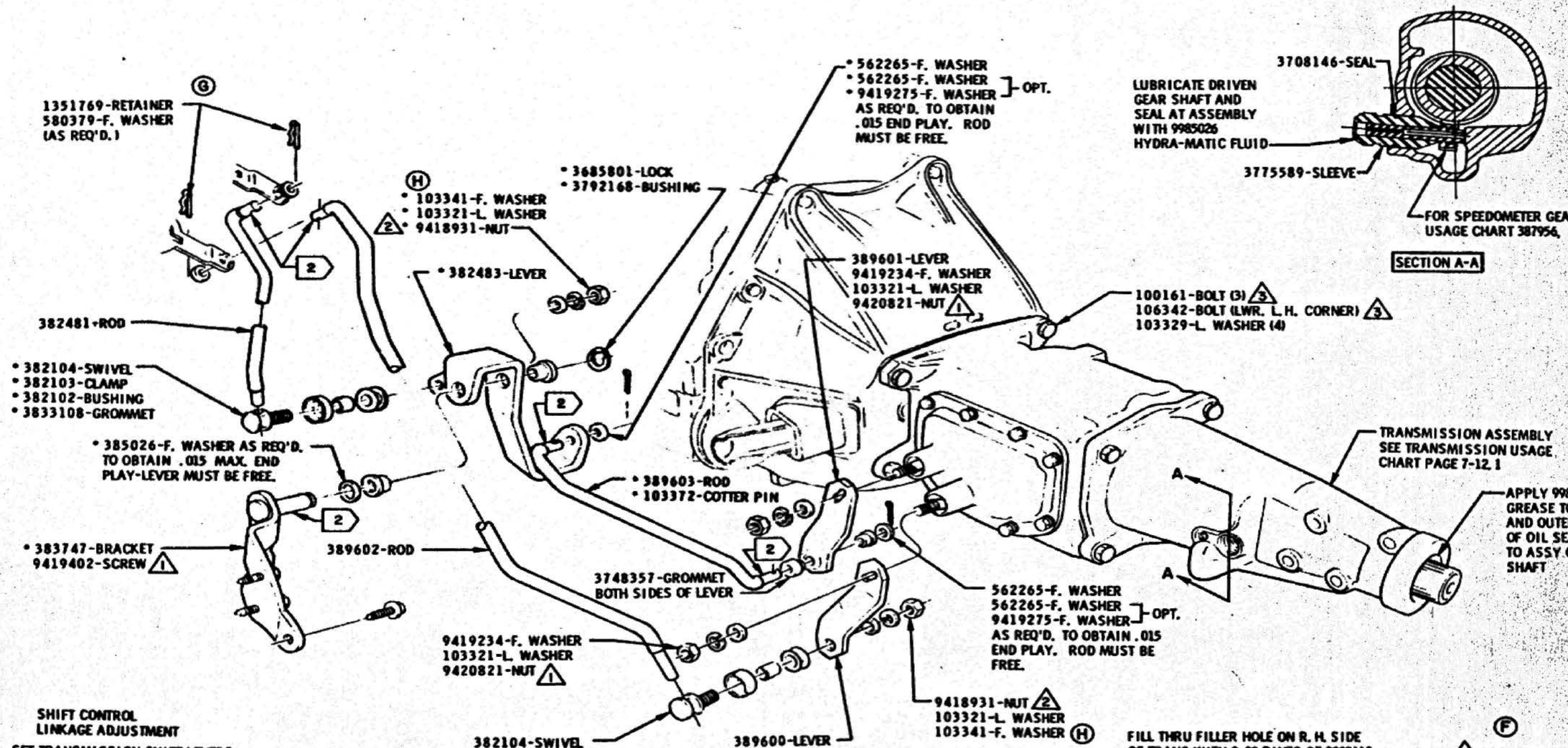

SHIFT CONTROL LINKAGE ADJUSTMENT

1. SET TRANSMISSION SHIFT LEVERS IN RESPECTIVE NEUTRAL DETENTS.
2. WITH SWIVELS LOOSE, INSERT TOOL WITH 3/16" DIA. GAGE PIN IN STEERING COLUMN SHIFT LEVERS.
3. TIGHTEN NUTS ON SWIVELS ON LOWER END OF SHIFT RODS.

FILL THRU FILLER HOLE ON R. H. SIDE OF TRANS WITH 2.00 PINTS OF 9985113 OIL THEN REINSTALL FILLER PLUG TO 35-40 LBS. FT.

F

1 120-180 LBS. IN.
2 16-26 LBS. FT.
3 60-70 LBS. FT.

LUBRICATE AREAS INDICATED 2 WITH 9985038 GREASE.

* PART OF 390052-BRACKET SHOP ASSY FOR B.O.P. ASSY PLANTS ONLY

WITH "L77" OR "L78" ENGINE

DATE	SYM	REVISION	DR.	CK.	DATE	SYM	REVISION	DR.	CK.	DATE	SYM	REVISION	DR.	CK.
										11-23-64	E3	LUBRICATION NOTE ADDED		
										9-27-64	D	SECTION A-A ADDED		
					4-23-65	H2	WAS 382105 F. WASHER			8-19-64	C	NOTE ADDED		
					2-23-65	G	WAS 3749084			8-18-64	B	B.O.P. INFO. ADDED		
					11-23-64	F	TORQUE SPECS ADDED			7-21-64	A	TRANSMISSION NO. REMOVED		

INSTALLATION — SM TRANSMISSION & CONTROL (3 S COLUMN SHIFT)

DATE JUNE 22, 1964 — DR. BY ED J. ROE — CHECKED — APPR. — APPR.

FIRST USED 1965 — Oldsmobile GRAPHIC ILLUSTRATION — PAGE 7-2.2

SERIES F-85 — REF. TR-3991 TR-4468 TR-5210 — PART NO. 387271

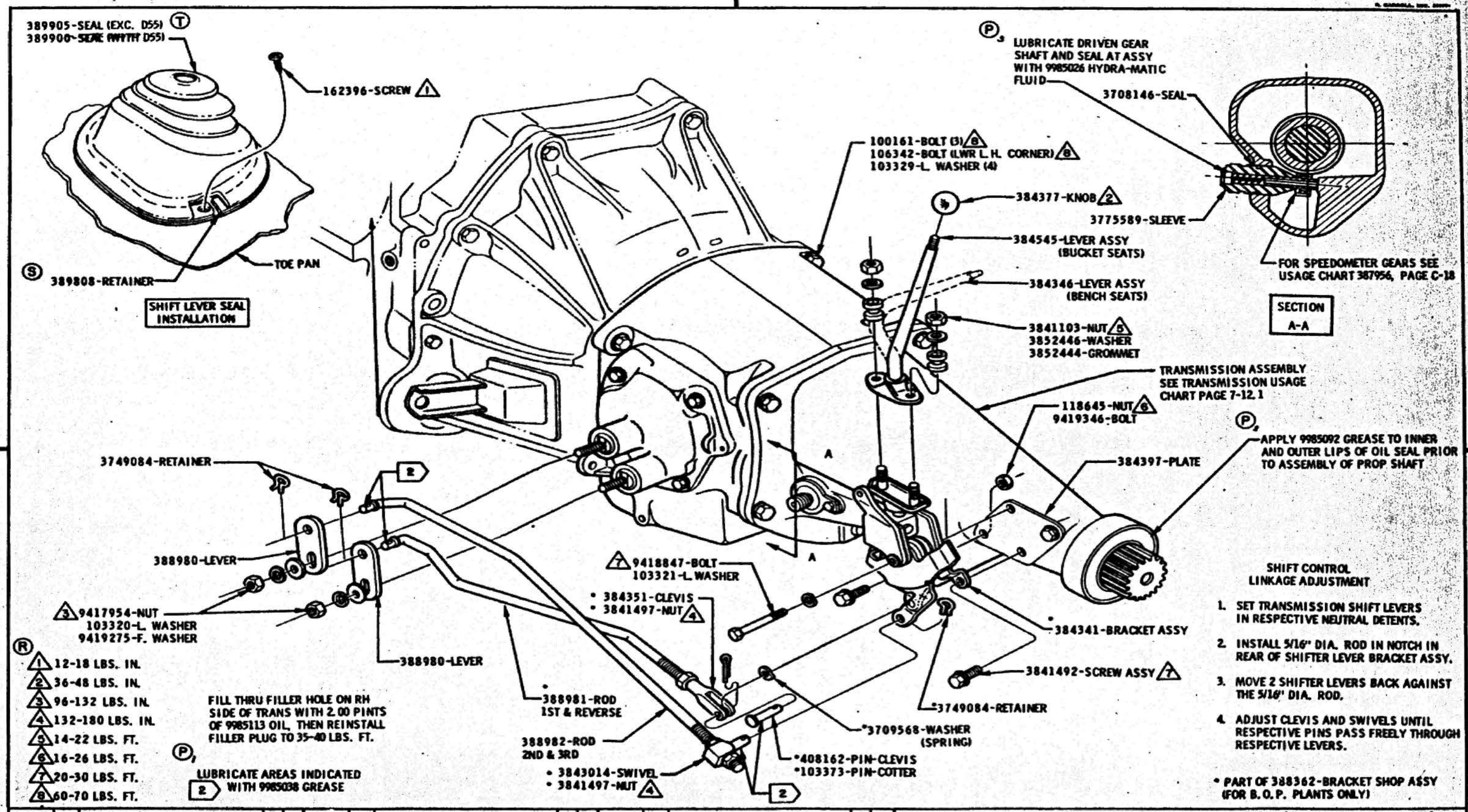

DATE	SYM	REVISION	DR.	CK.	DATE	SYM	REVISION	DR.	CK.	DATE	SYM	REVISION	DR.	CK.
										12-11-64	T	WAS 384431 SEAL	JLG	PTB
										12-11-64	S	WAS 3842927 RETAINER	JLG	PTB
										11-23-64	R	TORQUE SPECS ADDED	JC	PTB
										11-23-64	P2	LUBE NOTES ADDED	JC	PTB

INSTALLATION — TRANSMISSION & CONTROL (3S FLOOR SHIFT)

DATE JAN. 30, 1964
DR. BY R. ACHTERHOF
CHECKED D. TITUS
APPR.
APPR.

FIRST USED 1965 — Oldsmobile DIVISION ILLUSTRATION — PAGE 7-3.1

SERIES F85 — REF. TR-4450 — PART NO. 387272

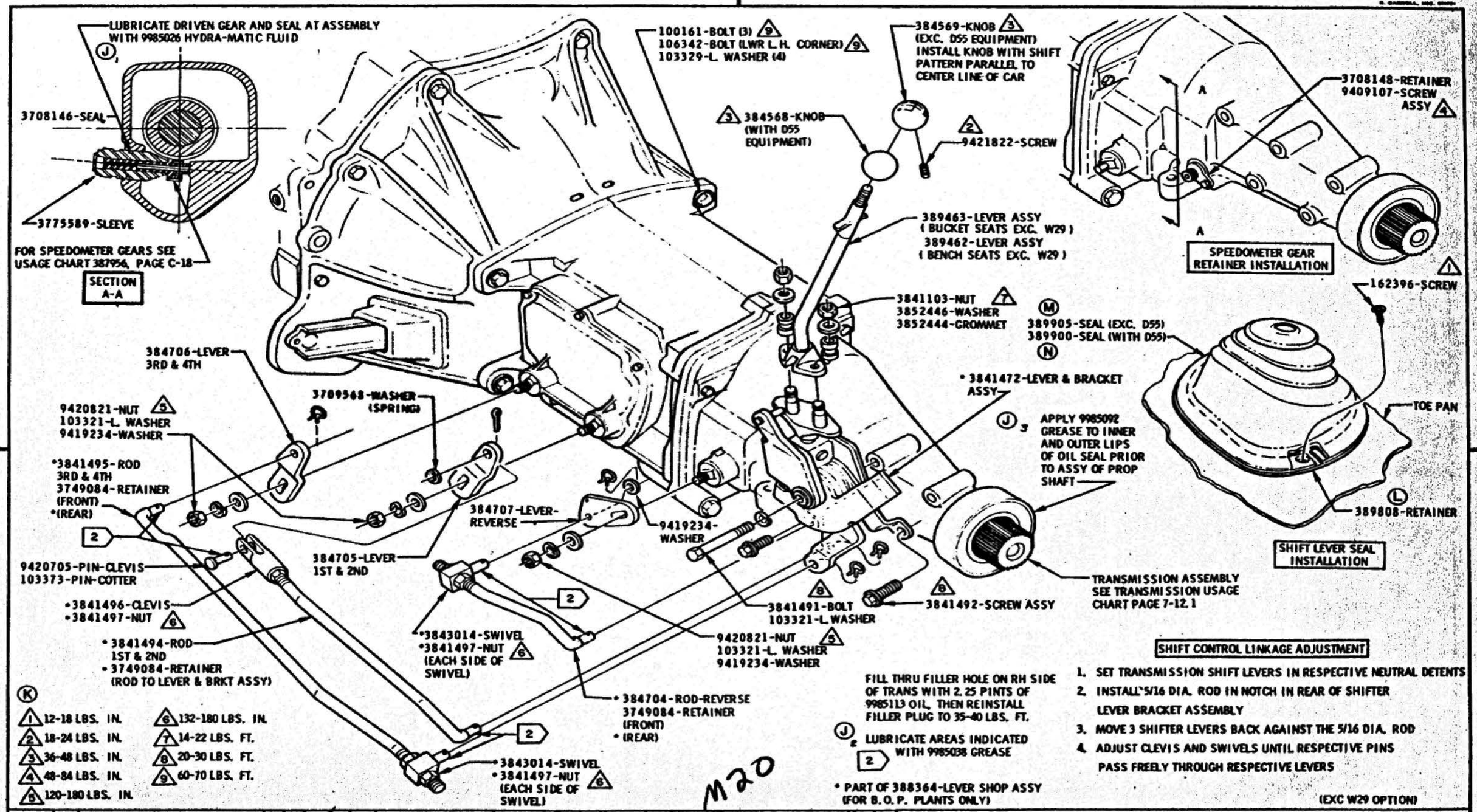

DATE	SYM	REVISION	DR.	CK.	DATE	SYM	REVISION	DR.	CK.	DATE	SYM	REVISION	DR.	CK.
					11-29-64	K	TORQUE SPECS ADDED			7-27-64	E	BOP INFO ADDED		
					11-29-64	J	LUBRICATION NOTE ADDED			7-27-64	D	TRANSMISSION NO. REMOVED		
12-11-64	N	WAS 3842926 & 388494 SEAL			8-27-64	H	[illegible]			5-4-64	C	PART NOS. REVISED		
12-11-64	M	WAS 384431 SEAL			8-21-64	G	W29 INFO. MOVED TO PAGE 2			5-4-64	B	WAS 384727-TRANS. ASSY		
12-11-64	L	WAS 3842927 RETAINER			8-18-64	F	W29 PARTS ADDED			4-14-64	A	NOS. ADDED		

INSTALLATION	TRANSMISSION & CONTROL (4S FLOOR SHIFT)		
DATE FEB. 12, 1964	FIRST USED 1965	Oldsmobile Service ILLUSTRATION	PAGE 7-4.1
DR. BY R. ACHTERHOF			
CHECKED D. TITUS	SERIES F 85	REF. TR-4511 L71091 L71552	PART NO. 387273
APPR.			
APPR.			

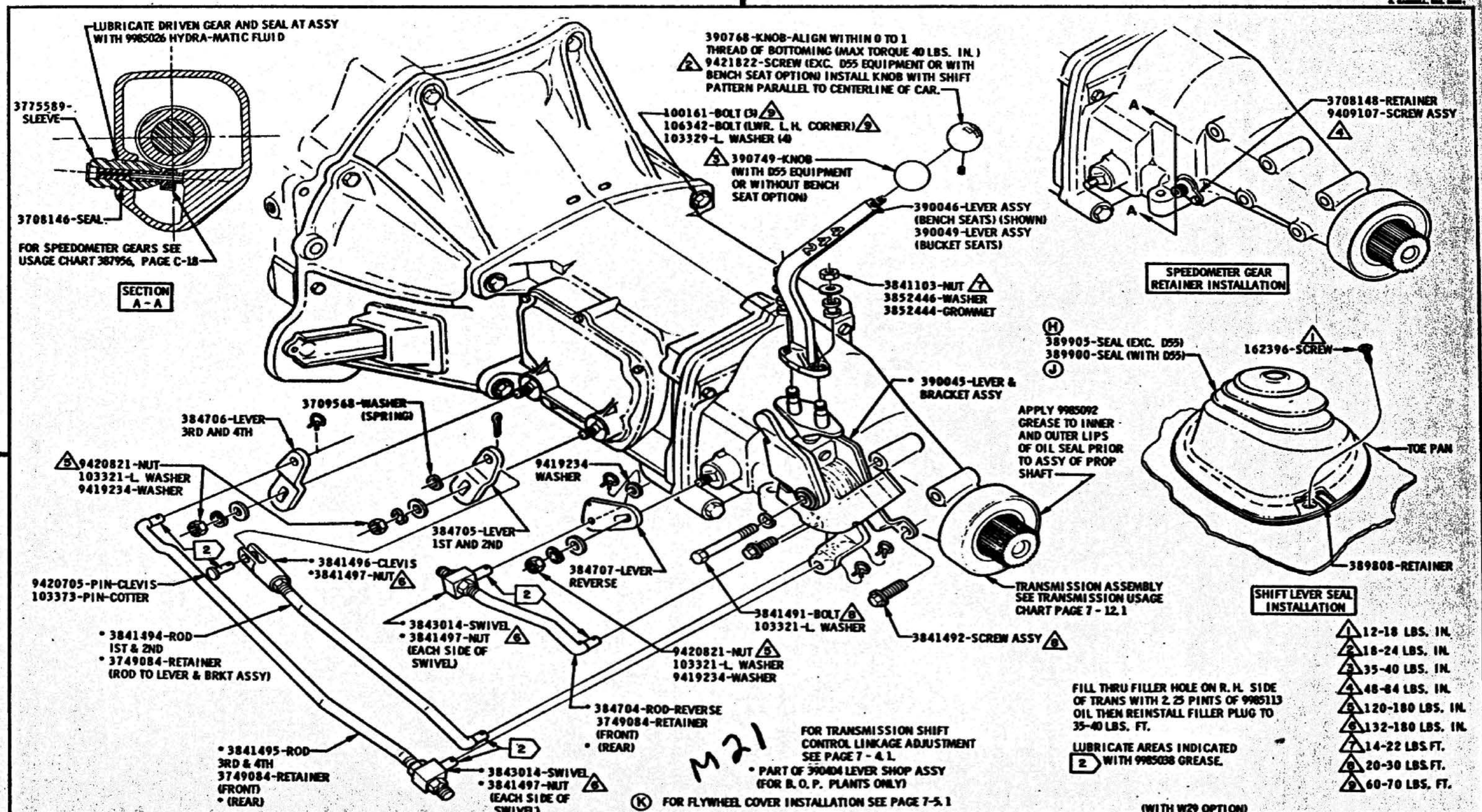

DATE	SYM	REVISION	DR.	CK.	DATE	SYM	REVISION	DR.	CK.	DATE	SYM	REVISION	DR.	CK.
					2-23-66	K	NOTE ADDED			11-23-64	E	LUBRICATION NOTE ADDED		
					12-11-64	J	WAS 390280 SEAL			9-23-64	D	386418 NUT REMOVED		
					12-11-64	H	WAS 390269 SEAL			9-23-64	C	390749 WAS 390601 KNOB		
					12-11-64	G	WAS 3842927 RETAINER			9-23-64	B	390768 WAS 390600 KNOB		
					11-23-64	F	TORQUE SPECS ADDED			9-23-64	A	NOTE REVISED		

INSTALLATION — TRANSMISSION & CONTROL (4S FLOOR SHIFT)

DATE AUG. 27, 1964
DR. BY W.C. MASON
CHECKED

FIRST USED 1965 — Oldsmobile Service ILLUSTRATION — SERIES F85 — REF. — PAGE 7-4.2 — PART NO. 387273

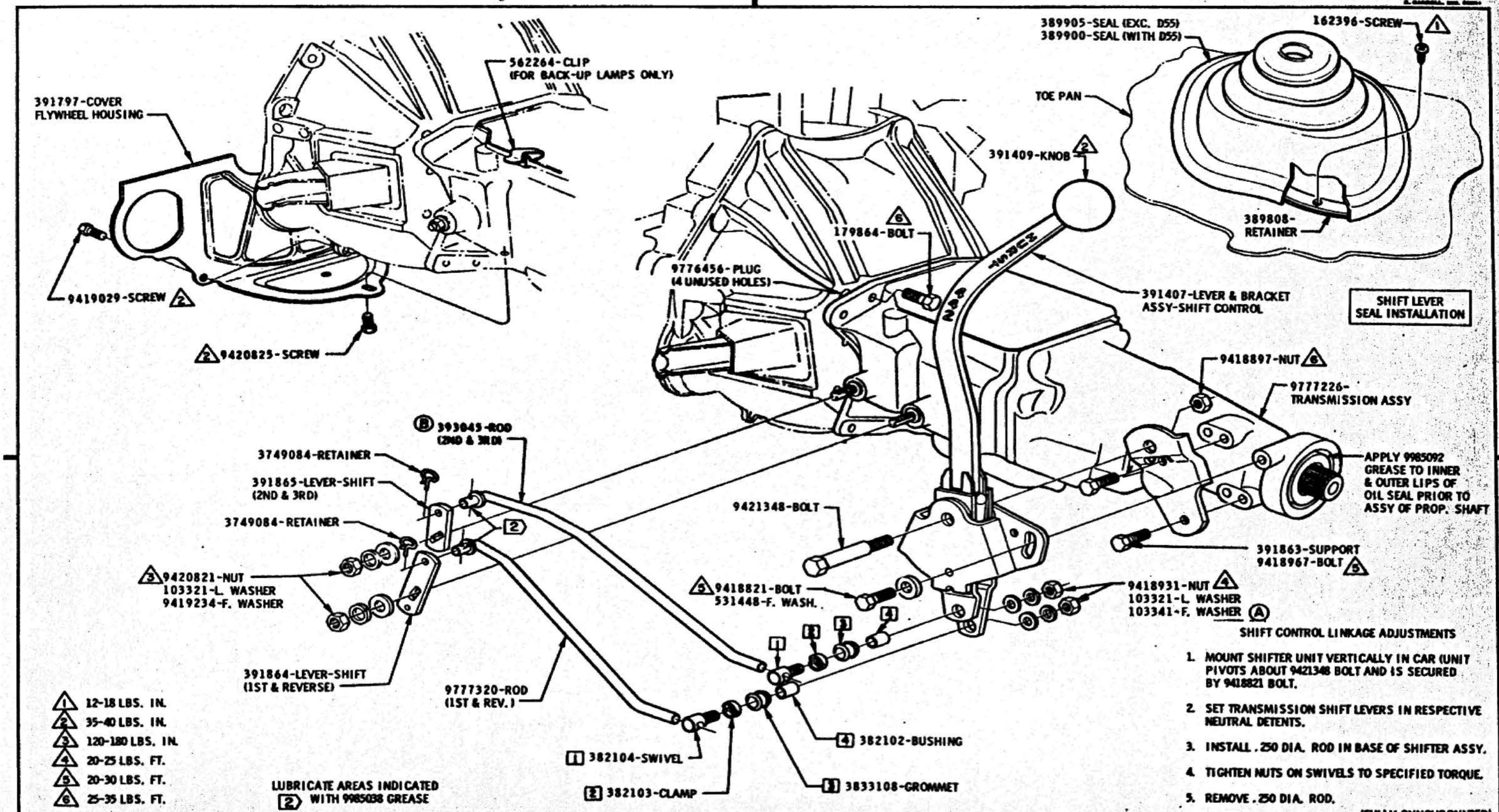

SHIFT CONTROL LINKAGE ADJUSTMENTS

1. MOUNT SHIFTER UNIT VERTICALLY IN CAR (UNIT PIVOTS ABOUT 9421348 BOLT AND IS SECURED BY 9418821 BOLT.
2. SET TRANSMISSION SHIFT LEVERS IN RESPECTIVE NEUTRAL DETENTS.
3. INSTALL .250 DIA. ROD IN BASE OF SHIFTER ASSY.
4. TIGHTEN NUTS ON SWIVELS TO SPECIFIED TORQUE.
5. REMOVE .250 DIA. ROD.

(FULLY SYNCHRONIZED)

DATE	SYM	REVISION	DR.	CK.	DATE	SYM	REVISION	DR.	CK.	DATE	SYM	REVISION	DR.	CK.
										5-12-65	B	WAS 9777821-ROD		
										4-26-65	A	WAS 382105 F. WASHER		

INSTALLATION **TRANSMISSION & CONTROL-3 SPEED FLOOR SHIFT**

DATE FEBRUARY 5, 1965 — FIRST USED 1965 — Oldsmobile ILLUSTRATION — PAGE 7-5.1

DR. BY MODERN ENG. SVCE.

CHECKED R. Bonnant

APPR. R. C. SIEMPEL — SERIES F85 — REF. 442 TR5195 — PART NO. 392186

APPR.

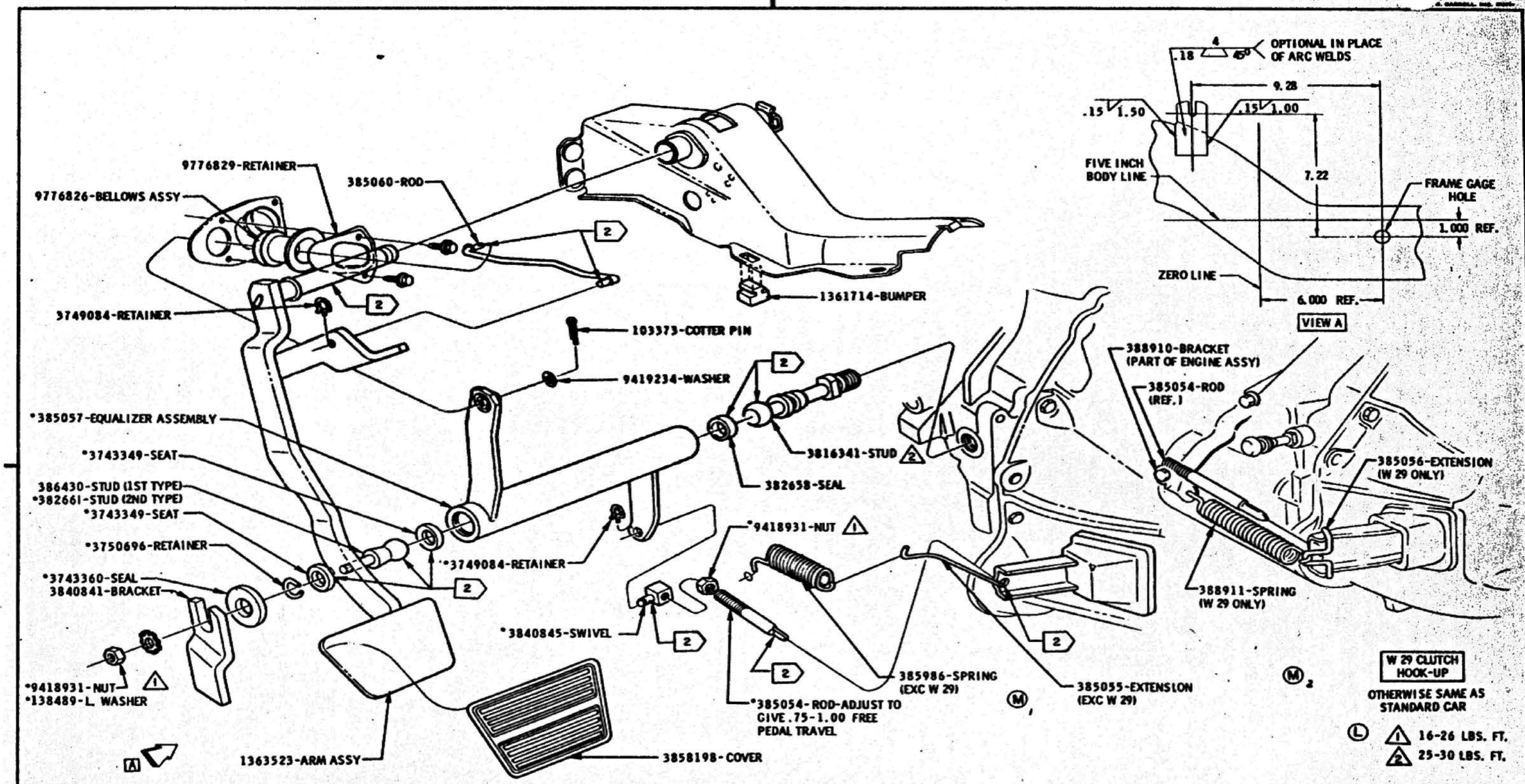

DATE	SYM	REVISION	DR.	CK.	DATE	SYM	REVISION	DR.	CK.	DATE	SYM	REVISION	DR.	CK.
					11-23-64	K	LUBE NOTE ADDED			4-14-64	E	WAS 383752-SEAL		
					7-27-64	J	END TYPE STUD ADDED			3-19-64	D	WAS 1363611		
					7-24-64	H	BOP INFO ADDED.			3-10-64	C	3828198 PLUG REMOVED		
11-23-64	M2	W 29 INFO ADDED			6-24-64	G	385056-EXT. REMOVED			3-4-64	B	WAS 383755		
11-23-64	L	TORQUE SPECS ADDED			6-1-64	F	WAS 114606			2-24-64	A	WAS 1363584		

INSTALLATION **CLUTCH CONTROL** (V-8)

DATE FEBRUARY 6, 1964
DR. BY PIONEER TRACK DIVISION
CHECKED
APPR.
APPR.

FIRST USED 1965

Oldsmobile Service ILLUSTRATION

SERIES F85

REF. TR-3991

PAGE 7-6.1

PART NO. 387267

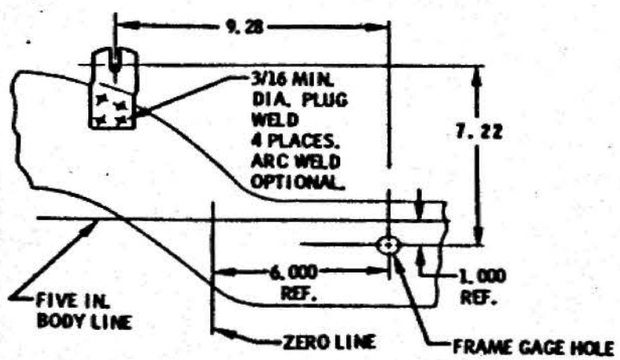

VIEW A

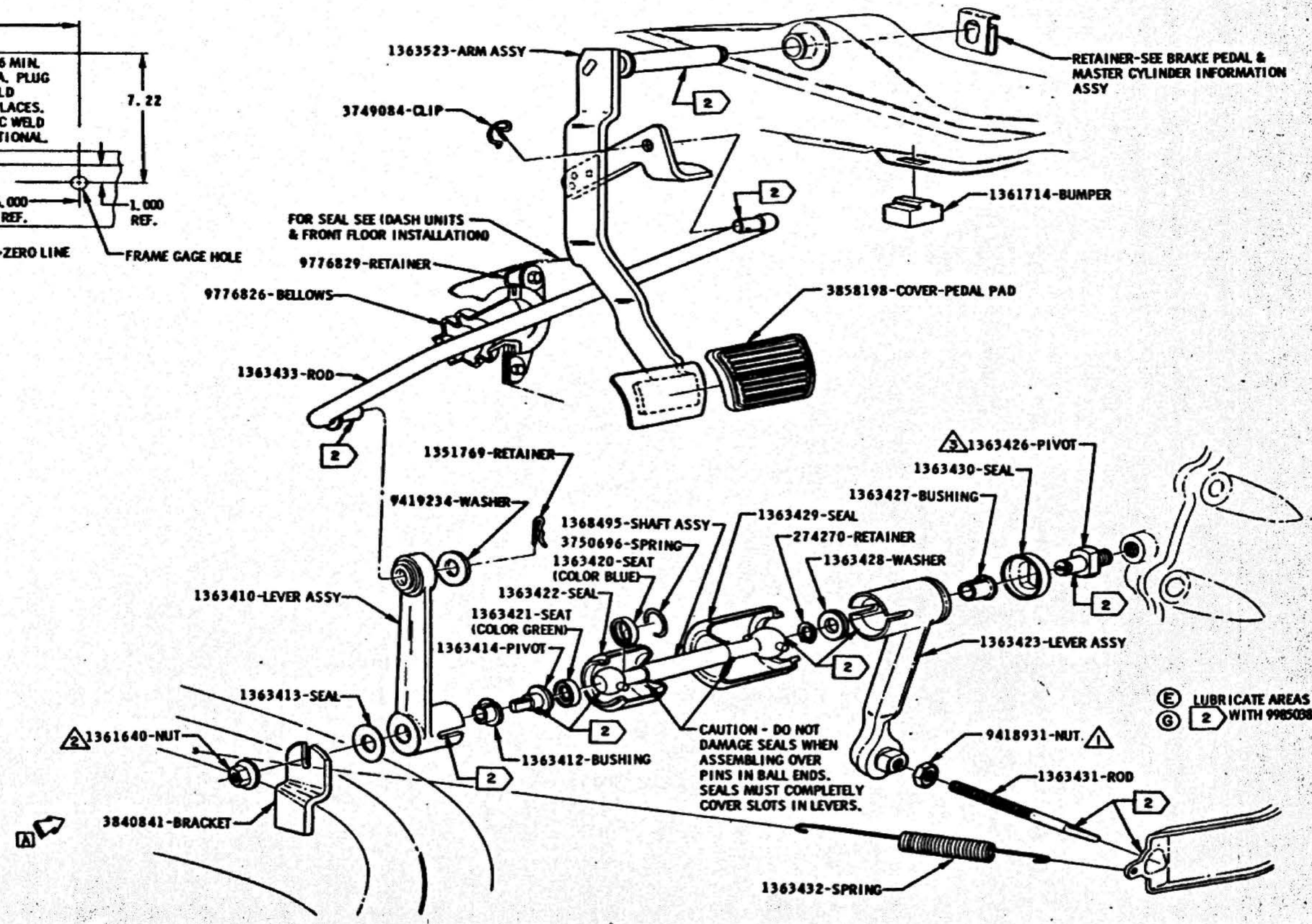

CLUTCH LASH ADJUSTMENT. WITH CLUTCH PEDAL AT FULL RELEASE POSITION, CONTACTING RUBBER BUMPER STOP, ADJUST CLUTCH RELEASE ROD TO GIVE ZERO LASH AT CLUTCH PEDAL. BACK OFF CLUTCH RELEASE ROD APPROX (3) TURNS TO GIVE .76 TO 1.00 LASH AT PEDAL PAD, TIGHTEN LOCKNUT ON CLUTCH RELEASE ROD.

(F)

(1) 16-26 LBS. FT.
(2) 20-30 LBS. FT.
(3) 45-60 LBS. FT.

(E) (G) (2) LUBRICATE AREAS INDICATED WITH 9985038 GREASE.

DATE	SYM	REVISION	DR.	CK.	DATE	SYM	REVISION	DR.	CK.	DATE	SYM	REVISION	DR.	CK.
										8-1-64	E	LUBE NOTE REVISED		
										4-14-64	D	WAS 383752 SEAL		
										4-2-64	C	WAS 1363611		
					11-25-64	G	LUBE NOTE REVISED	QC		3-14-64	B	WAS 115343		
					11-25-64	F	TORQUE SPECS ADDED	CG		2-14-64	A	WAS 383753		

INSTALLATION: CLUTCH CONTROL (V-8)

DATE FEB. 12, 1964
DR. BY PIONEER TECH DATA
CHECKED D. TITUS
APPR.
APPR.

FIRST USED 1965
Oldsmobile Service ILLUSTRATION
PAGE 7-7.1
SERIES F85
DIV. 7818
PART NO. 387292

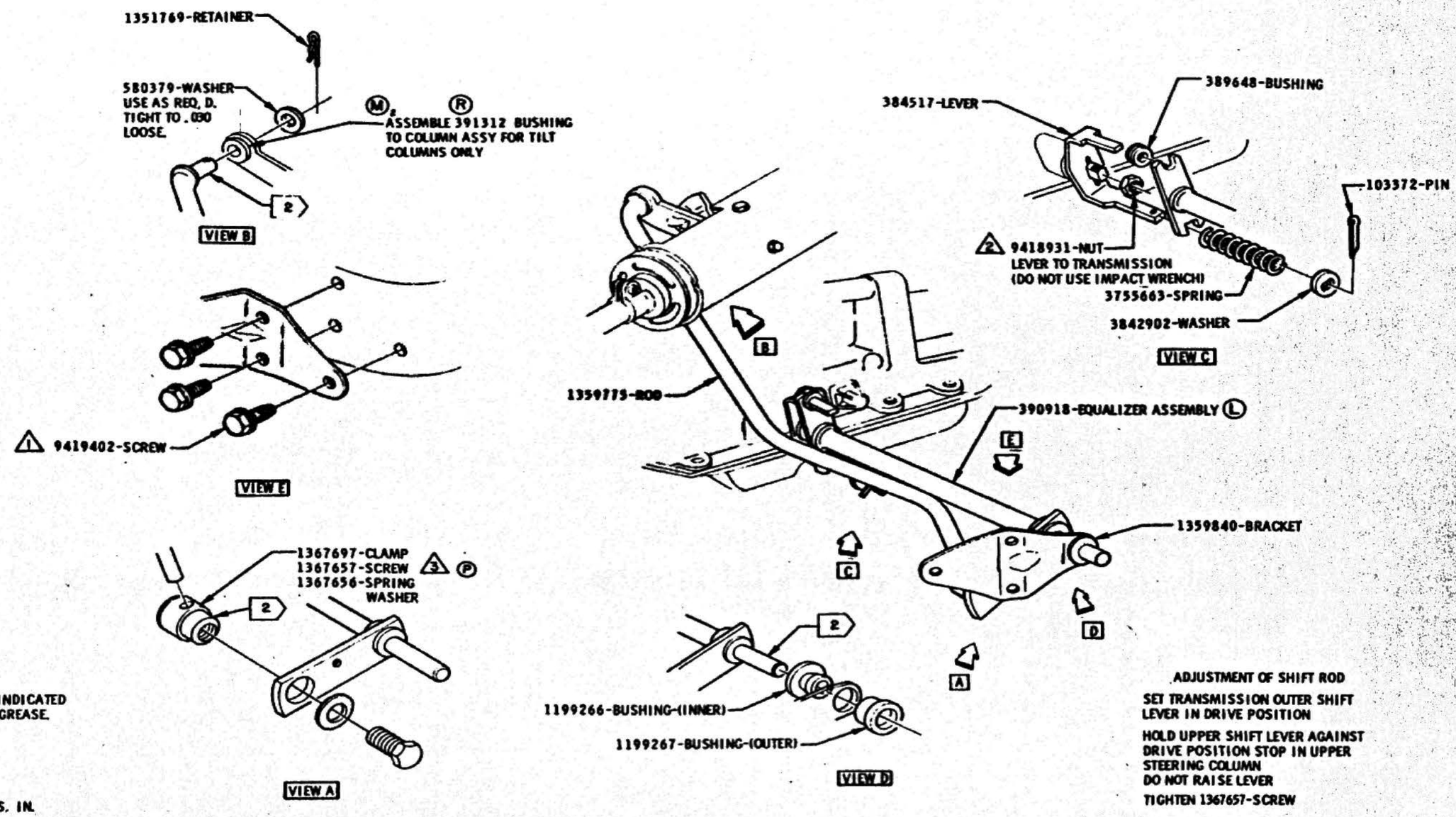

M1
LUBRICATE AREAS INDICATED
2 WITH 9985038 GREASE.

N
1 120-180 LBS. IN.
2 16-26 LBS. FT.
3 17-23 LBS. FT.

ADJUSTMENT OF SHIFT ROD

SET TRANSMISSION OUTER SHIFT LEVER IN DRIVE POSITION

HOLD UPPER SHIFT LEVER AGAINST DRIVE POSITION STOP IN UPPER STEERING COLUMN
DO NOT RAISE LEVER

TIGHTEN 1367657-SCREW

DATE	SYM	REVISION	DR.	CK.	DATE	SYM	REVISION	DR.	CK.	DATE	SYM	REVISION	DR.	CK.
1-25-65	R	391312 WAS 382078			10-7-64	K	WAS 1349346-NUT			9-22-64	E	1349346 REM'D		
12-10-64	P	TORQUE NOTE 3 WAS 1			9-22-64	J	NOTE ADDED			9-22-64	D	3756527 REM'D		
11-27-64	N	TORQUE NOTE ADDED			9-22-64	H	1367656 ADDED			9-22-64	C	1367697 WAS 1355610		
11-27-64	M2	NOTES ADDED			9-22-64	G	1367657 ADDED			9-22-64	B	NOTE ADDED		
10-26-64	L	390918 WAS 384519			9-22-64	F	3756526 REM'D			7-7-64	A	WAS 384580		

INSTALLATION SHIFT CONTROL (JT)

DATE JAN. 30, 1964
DR. BY PIONEER TRCH DATA
CHECKED D. TITUS
APPR.
APPR.

FIRST USED 1965

Oldsmobile GRAPHIC ILLUSTRATION

SERIES F85

REF. 35N33

PAGE 7-8.1

PART NO. 387275

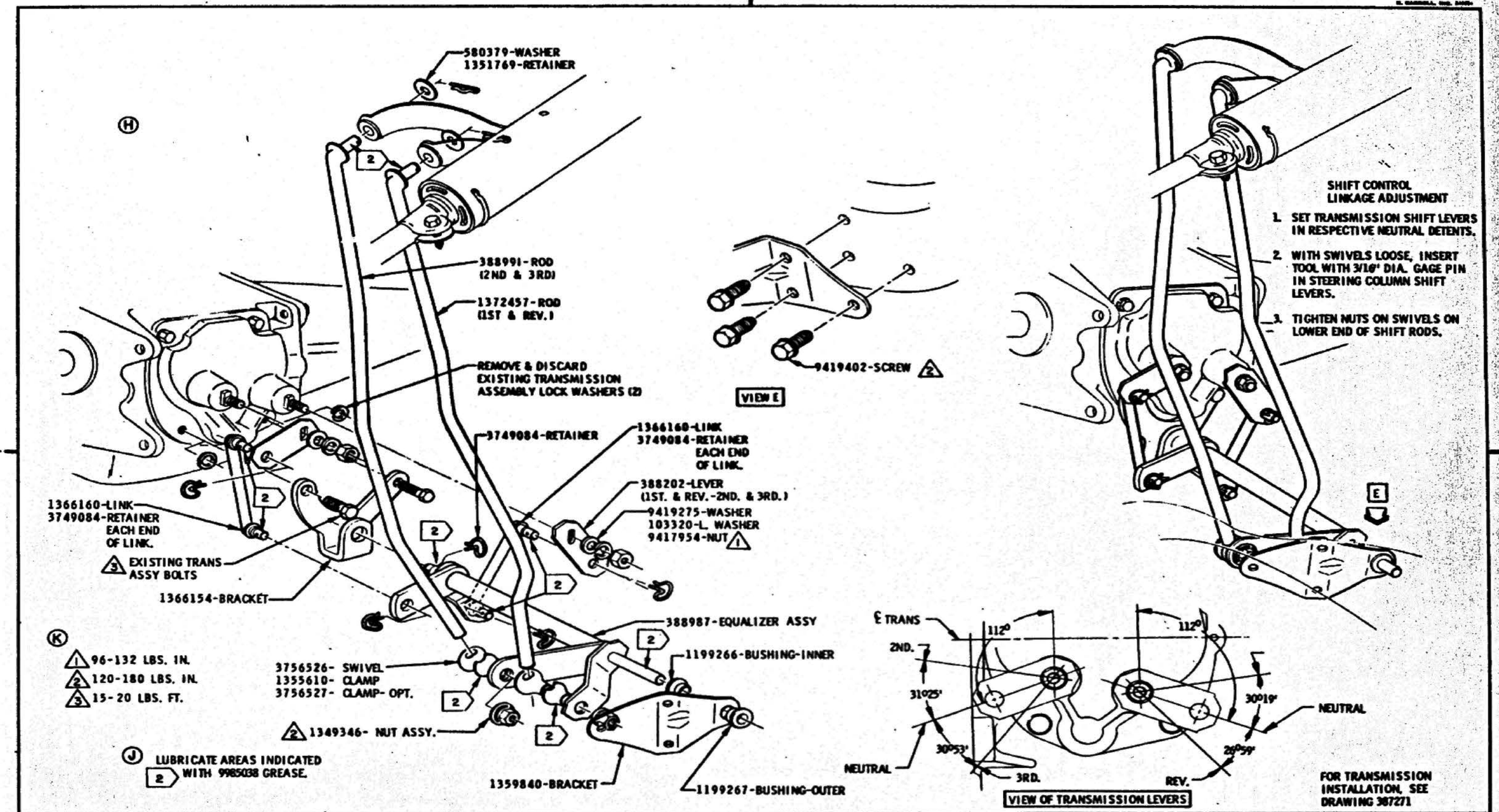

DATE	SYM	REVISION	DR.	CK.	DATE	SYM	REVISION	DR.	CK.	DATE	SYM	REVISION	DR.	CK.
					11-27-64	K	TORQUE SPEC ADDED			7-1-64	E	1372457 WAS 1363661		
					11-27-64	J	LUBE NOTE REVISED			6-15-64	D	REVISED TO DETAIL		
					8-10-64	H	VIEW REMOVED			5-1-64	C	388991 WAS 1363662		
					8-18-64	G	NOTE REVISED			5-15-64	B	388987 WAS 1366155		
					8-13-64	F	LUBE NOTE REVISED			4-17-64	A	388202 WAS 1366161		

INSTALLATION — SHIFT CONTROL (SM V-6)

DATE FEB. 12, 1964
DR. BY R. ACHTERHOF
CHECKED D. TITUS
APPR.
APPR.

FIRST USED 1965 — Oldsmobile ILLUSTRATION

SERIES F85 — REF. 7A — PAGE 7-9.1 — PART NO. 387274

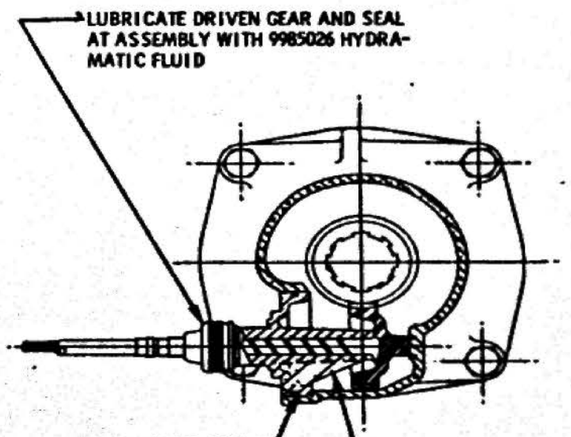

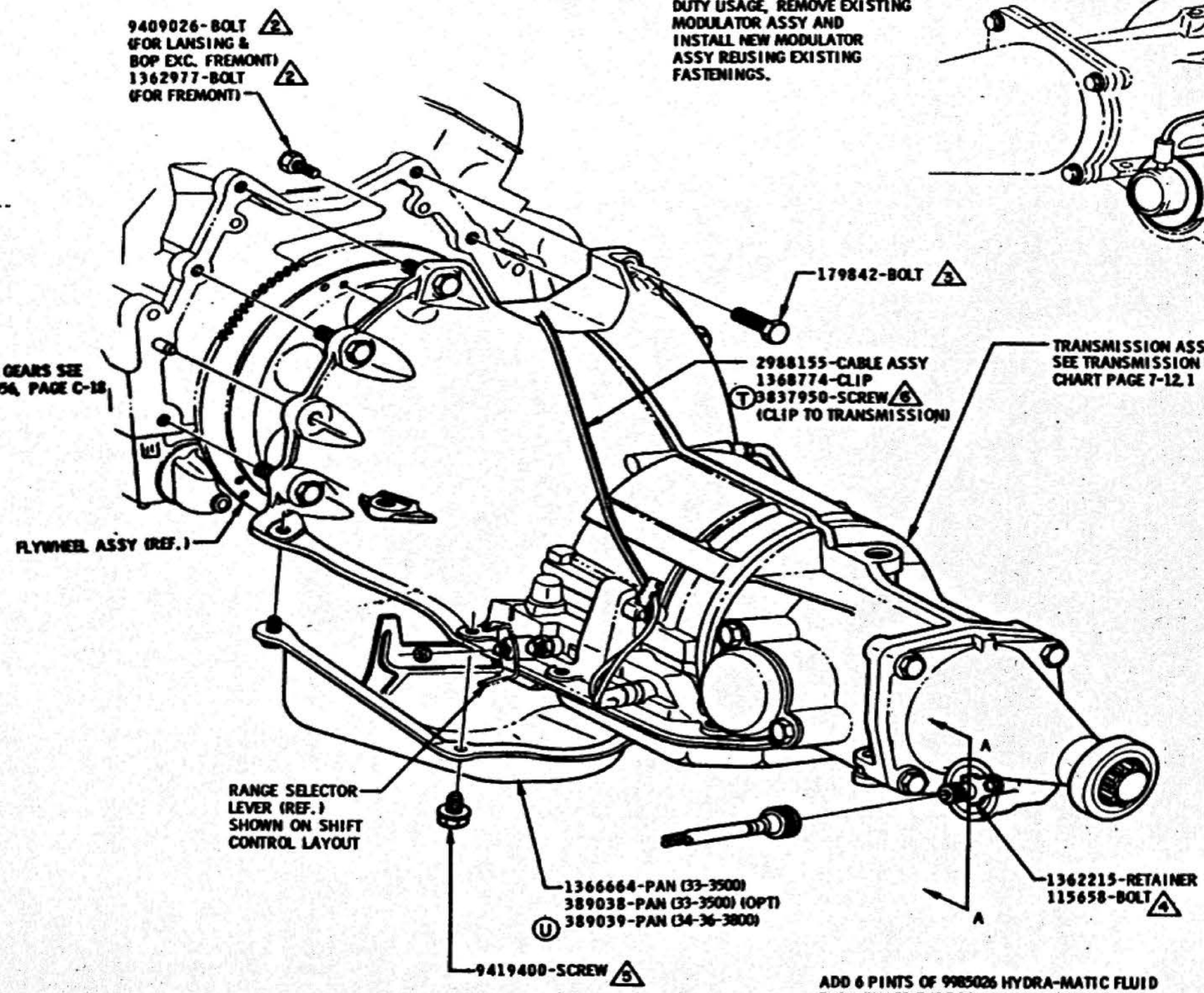

TO CONVERT STANDARD TRANSMISSION TO HEAVY DUTY USAGE, REMOVE EXISTING MODULATOR ASSY AND INSTALL NEW MODULATOR ASSY REUSING EXISTING FASTENINGS.

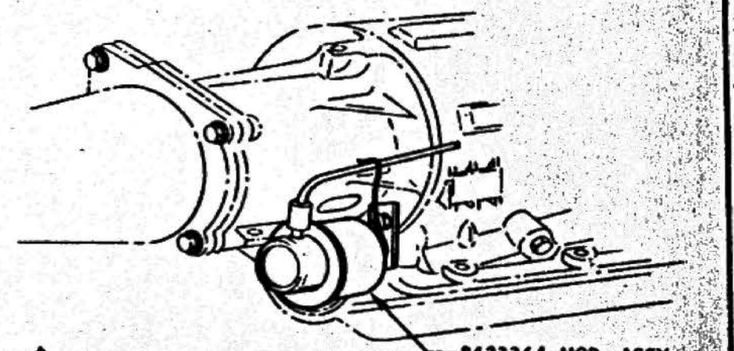

ADD 6 PINTS OF 9985026 HYDRA-MATIC FLUID THRU FILLER TUBE TO APPROX. 13 PINTS FURNISHED IN TRANS FOR A TOTAL OF 19 PINTS - SEE 388444 FOR FILL SPECS.

1 30-35 LBS. FT.
2 20-30 LBS. FT.
4 96-192 LBS. IN.
5 96-144 LBS. IN.
6 36-60 LBS. IN.

DATE	SYM	REVISION	DR.	CK.	DATE	SYM	REVISION	DR.	CK.	DATE	SYM	REVISION	DR.	CK.
										2-1-65	U	1368003-PAN REMOVED		
										1-8-65	T	WAS 9409319 SCREW		
										11-1-65	S	VIEW "A" REMOVED		
										11-23-64	R	TORQUE SPECS ADDED		
										11-23-64	R	NOTES ADDED		

INSTALLATION TRANSMISSION (JT)

DATE JAN. 30, 1964
DR. BY R. GOODWIN
CHECKED D. TITUS
APPR.
APPR.

FIRST USED 1965
Oldsmobile GRAPHIC ILLUSTRATION
SERIES F-85
REF. 35M39
PAGE 7-10.1
PART NO. 387284

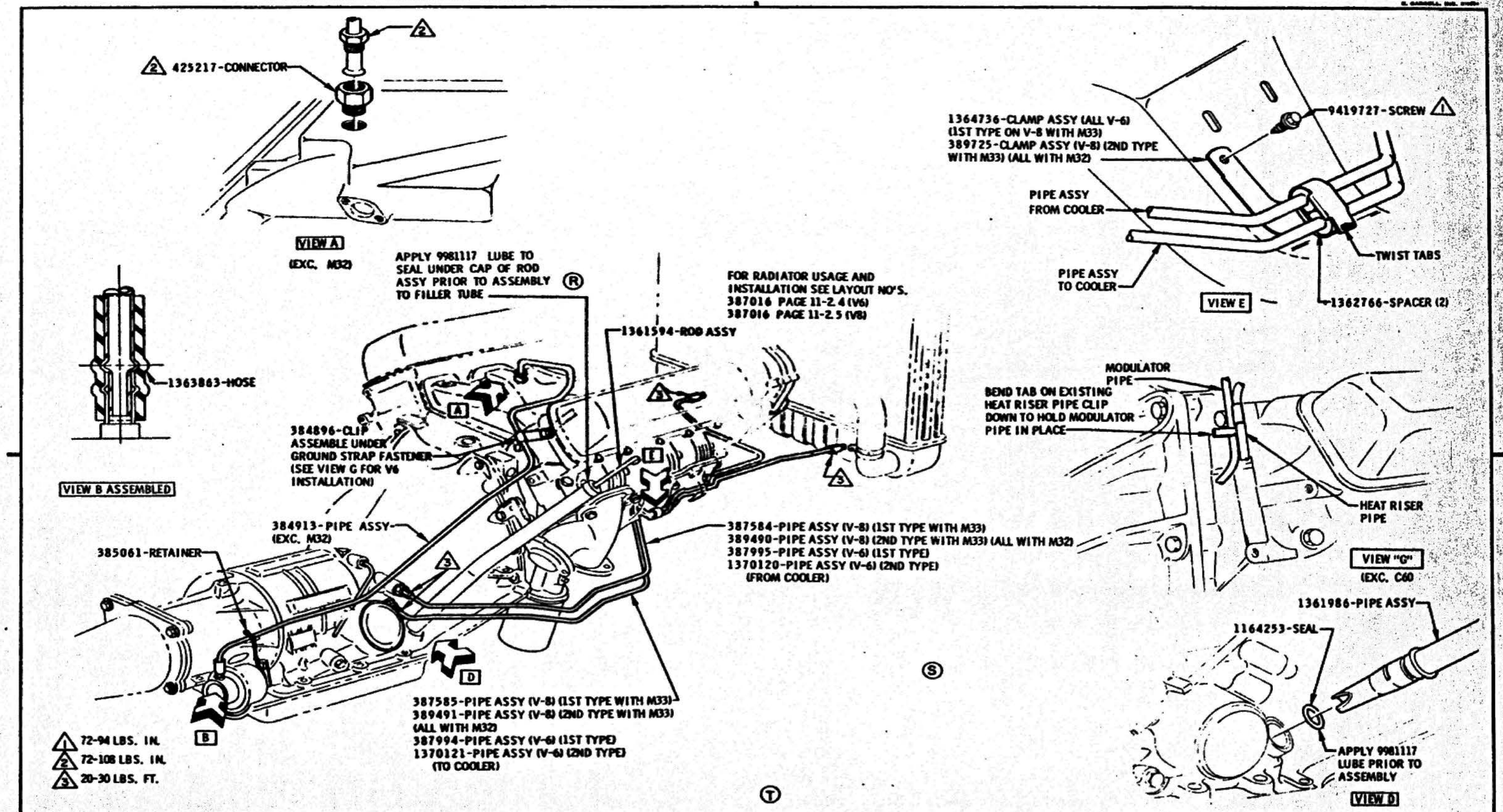

DATE	SYM	REVISION	DR.	CK.	DATE	SYM	REVISION	DR.	CK.	DATE	SYM	REVISION	DR.	CK.
										4-27-65	T	VIEW REMOVED	CG	[illegible]
										11-1-64	S	OPTION REMOVED	DS	[illegible]
										11-27-64	R	LUBE NOTE ADDED	[illegible]	[illegible]
										11-27-64	P	TORQUE SPECS ADDED	[illegible]	[illegible]

INSTALLATION **JETAWAY TRANSMISSION PIPES**

DATE FEBRUARY 27, 1964 — FIRST USED 1965 — Oldsmobile Service ILLUSTRATION — PAGE 7-11.1

DR. BY K. ACHTERHOF — CHECKED [illegible] — APPR. — APPR.

SERIES F85 — FR-4956 TR-4905 — PART NO. 387440

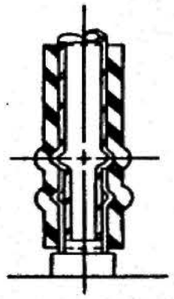

VIEW "A" ASSEMBLED

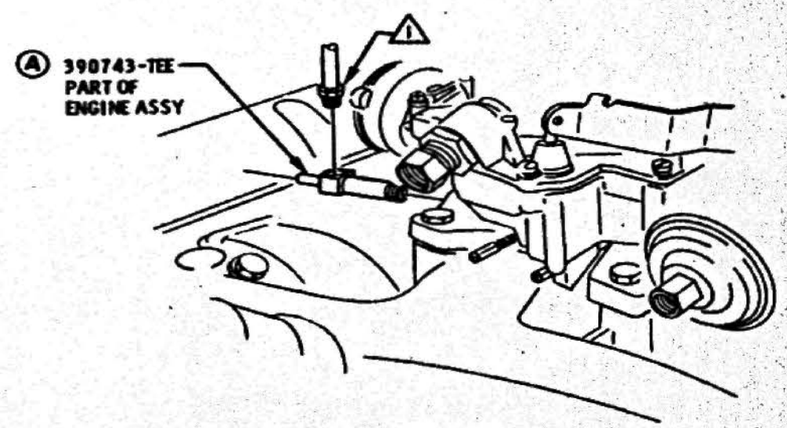

VIEW C

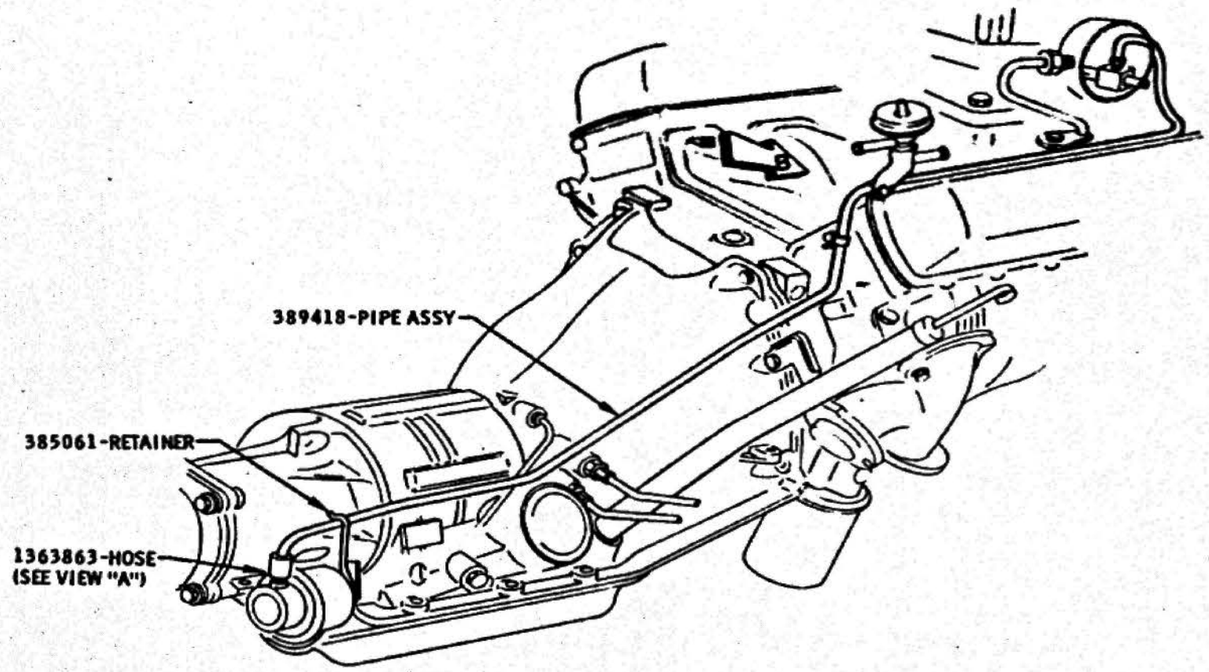

MODULATOR PIPE ASSY

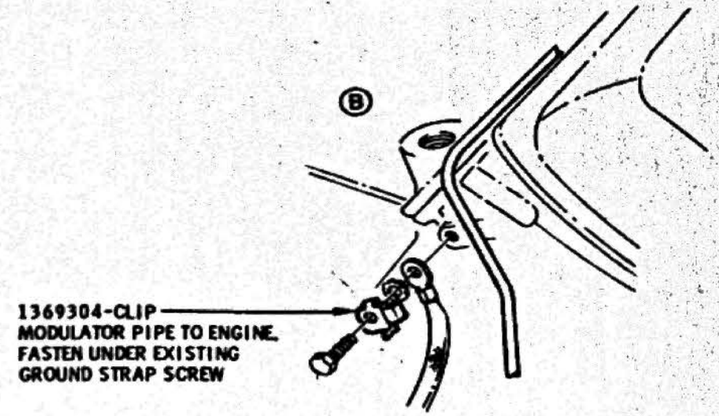

VIEW B

Ⓒ 1 72-108 LBS. IN.

(M32 TRANSMISSIONS ONLY)

DATE	SYM	REVISION	DR.	CK.	DATE	SYM	REVISION	DR.	CK.	DATE	SYM	REVISION	DR.	CK.
										11-23-64	C	TORQUE SPEC. ADDED	LAS	
										11-2-64	B	VIEW & NOTE REVISED		
										10-6-64	A	390743 WAS 388670-TEE		

INSTALLATION JETAWAY TRANSMISSION PIPES

DATE JULY 2, 1964
DR. BY W.E. MASON
CHECKED
APPR.
APPR.

FIRST USED 1965 | Oldsmobile Service Engineering ILLUSTRATION | PAGE 7-11.2

DESIGN F85 | REF. | PART NO. 387440

SYNCHROMESH TRANSMISSION (3 SPEED)

PART NUMBER	IDENTIFICATION	SERIES		SPEEDOMETER DRIVE GEAR	LOCATION OF IDENTIFICATION
3866689	QV	33300, 33400, 33500, 33600, 33800 (STD. LENGTH) (V6 & V8) (STEERING COLUMN SHIFT)		8 TOOTH	1" HIGH LETTERS ON R.H. SIDE OF CASE
387790	SG	33300, 33400, 33500, 33600, 33800 (STD. LENGTH) (V6 & V8) (FLOOR SHIFT)		8 TOOTH	
386978	SF	35200 (V8) (STEERING COLUMN SHIFT)			
386530	EA	35457, 35600, 35800			
389439	EB	33427, 33827, 33837, 33867 (V8 HC) (WITH L78) (STEERING COLUMN SHIFT)	1ST TYPE	8 TOOTH	
389439	EB	33427, 33469, 33669, 33827, 33837 (V8 HC) (WITH L77) (STEERING COLUMN SHIFT)	1ST TYPE	8 TOOTH	
(S)(R) 9777226	DB	33427, 33827, 33837, 33867 (V8 HC) (WITH L78)	2ND TYPE	8 TOOTH	2" HIGH LETTERS ON R.H. SIDE OF EXTENSION
9777226	DB	33427, 33469, 33669, 33827, 33837 (V8 HC) (WITH L77)	2ND TYPE	8 TOOTH	

SYNCHROMESH TRANSMISSION (4 SPEED)

388676	GA	33300, 33400, 33500, 33600, 33800 (STD. LENGTH) (V6 & V8)		8 TOOTH	1" HIGH LETTERS ON R.H. SIDE OF CASE
386888	XN	35457, 35600, 35800, 36600 (EXTENDED) (V8)			
388482	XR	35200 (EXTENDED) (V8)			
(T)(P) 3867268	GB	33300, 33400, 33500, 33600, 33800 (STD. LENGTH) (V6 & V8) (CLOSE RATIO)		8 TOOTH (30 PITCH)	

JETAWAY TRANSMISSION

1370374	LJ	33300, 33500 (STD. LENGTH) (V6)		16 TOOTH	1" HIGH LETTERS ON BELL HOUSING
1370373	MJ	33400, 33600, 33855, 33865 (STD. LENGTH) (V8) (2 BARREL LC)		17 TOOTH	
1370377	MK	33400, 33600, 33855, 33865 (STD. LENGTH) V8 (ALL 4 BARREL WITH L-74 & L65) (W)		17 TOOTH	
(N) 1370377	MK	33827, 33837, 33867 (STD. LENGTH) (V8) (ALL 4 BARREL INCL. HC & L65, 98L90)		17 TOOTH	
1370377	MK	33400, 33600, 33827, 33837, 33855, 33865 (V8) (4 BARREL HC) (WITH L76)		17 TOOTH	
1371765	MT	35200 (EXTENDED LENGTH) (V8) (ALL 2 BARREL) (INCL. L65 OR 98L90)			
1372986	MU	35200 (EXTENDED LENGTH) (V8) (4 BARREL HC) (WITH L74)			
1372986	MU	35200 (EXTENDED LENGTH) (V8) (4 BARREL HC) (WITH L76 EXC. 35267)			
1372489	NJ	33427, 33827, 33837, 33867 (V8 HC) (WITH L78)		17 TOOTH	
1372489	NJ	33427, 33469, 33669, 33827, 33837 (V8 HC) (WITH L77)		17 TOOTH	

HYDRA-MATIC TRANSMISSION

8623705	OA	35600, 35800 (2 BARREL HC EXC. L-90, L-65) (U)	2" HIGH LETTERS ON BELL HOUSING
8623715	OB	(V) 38400, 38669 (4 BARREL HC & L-90)	
8623715	OB	(V) 35600, 35800 (4 BARREL HC) (WITH L74 & L-90)	
8623745	OE	35600, 35800 (4 BARREL HC) (WITH L77 EXC. 35667)	
8623735	OD	(V) 35800, 38400, 38600 (4 BARREL HC) (WITH L75 & L-90)	
8623725	OC	(V) 35600, 35800 (2 BARREL LC) (WITH L65 & L-90)	
8623745	OE	35457, 35600, 35800, 36600, 38400, 38669, 39860 (HEAVY DUTY) (WITH ALL ENGINES)	
8623735	OD	35457, 36600 (4 BARREL HC)	

DATE	SYM	REVISION	DR.	CK.	DATE	SYM	REVISION	DR.	CK.	DATE	SYM	REVISION	DR.	CK.
					4-9-65	T	WAS 390599	EC	AP	10-12-64	M	390599 ADDED	PA	MD
					2-10-65	S	STRG COL SHIFT REMOVED	JLG	AP	9-29-64	L	8623735 ADDED	PS	RW
6-9-65	W	L-65 ADDED	JJ	AP	2-2-65	R	SECOND TYPE ADDED	DS	RW	7-23-64	K	JETAWAY SECTION REVISED	PS	RW
6-9-65	V	L-90 ADDED	CG	JLG	2-2-65	P	WAS EC IDENT.	DS	RW	7-23-64	J	HYDRA-MATIC BLOCK REVISED	PS	RW
6-9-65	U	EXC. L-90, L-65 ADDED	CG	JLG	12-22-64	N	L65 & 98L90 ADDED	RW	AP	6-11-64	H	REVISED & REDRAWN	PS	RW

INSTALLATION **CHART – TRANSMISSION USAGE**

DATE MARCH 12, 1964
DR. BY JACQUI PERKINS
CHECKED W. L. WEISS
APPR.
APPR.

FIRST USED 1965
Oldsmobile Service ILLUSTRATION
SERIES ALL
REF.
PAGE 7-12.1"
PART NO. 388366

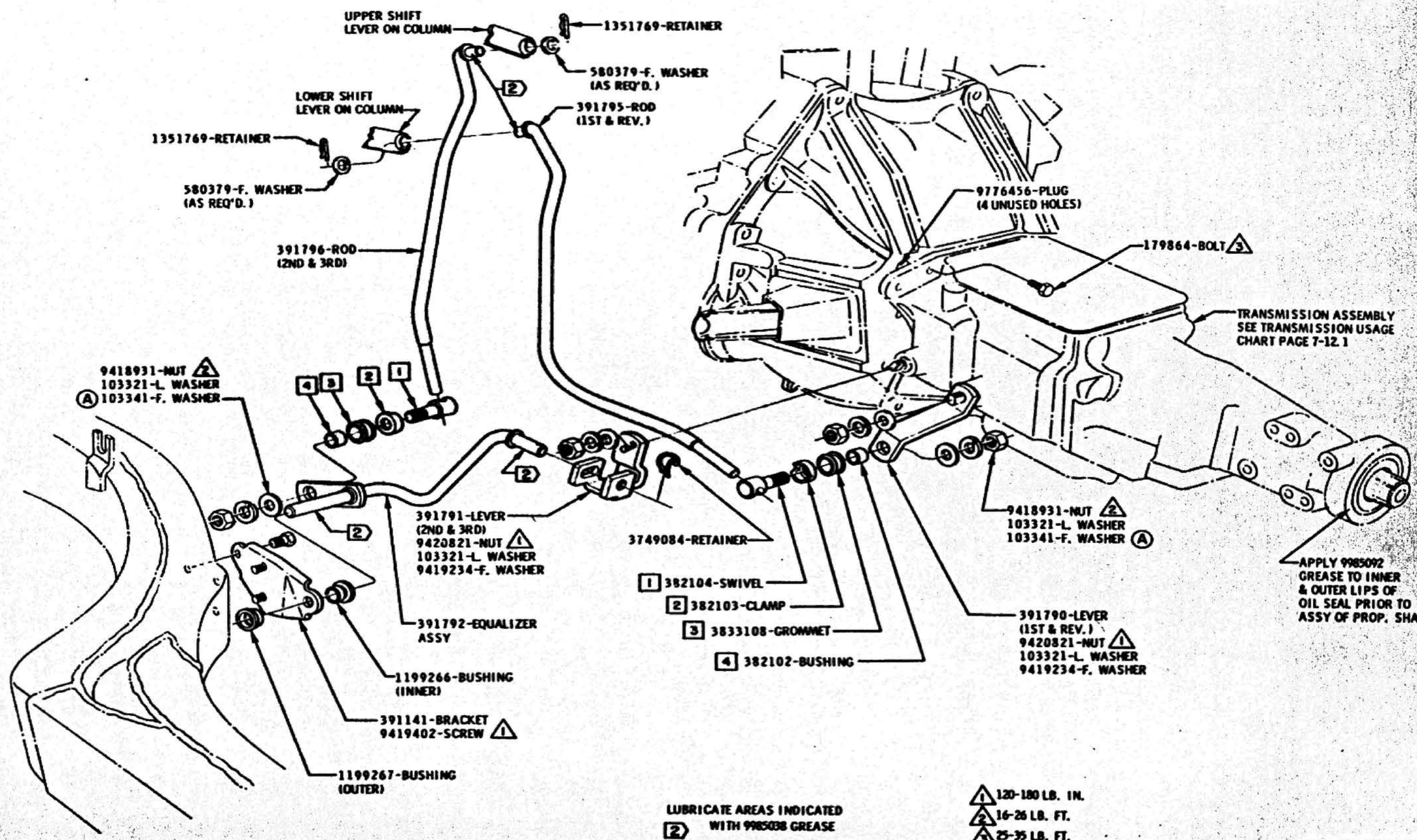

(FULLY SYNCHRONIZED)

DATE	SYM	REVISION	DR.	CK.	DATE	SYM	REVISION	DR.	CK.	DATE	SYM	REVISION	DR.	CK.
										4-27-65	A	HAS 382105 F. WASHER		

INSTALLATION **TRANSMISSION & CONTROL-COLUMN SHIFT**

DATE MARCH 12, 1965 | DR. BY MODERN | CHECKED | APPR. | APPR.

FIRST USED 1965 | Oldsmobile Service ILLUSTRATION | SERIES A | REF. M15 TR 5630 | PAGE 7-13.1 | PART NO. 392793

FUEL & EXHAUST

DRAWING NO.	DRAWING NAME	PAGE NO.
387279	EXHAUST SYSTEM	8 - 2.1
387278	FUEL SYSTEM	8 - 3.1

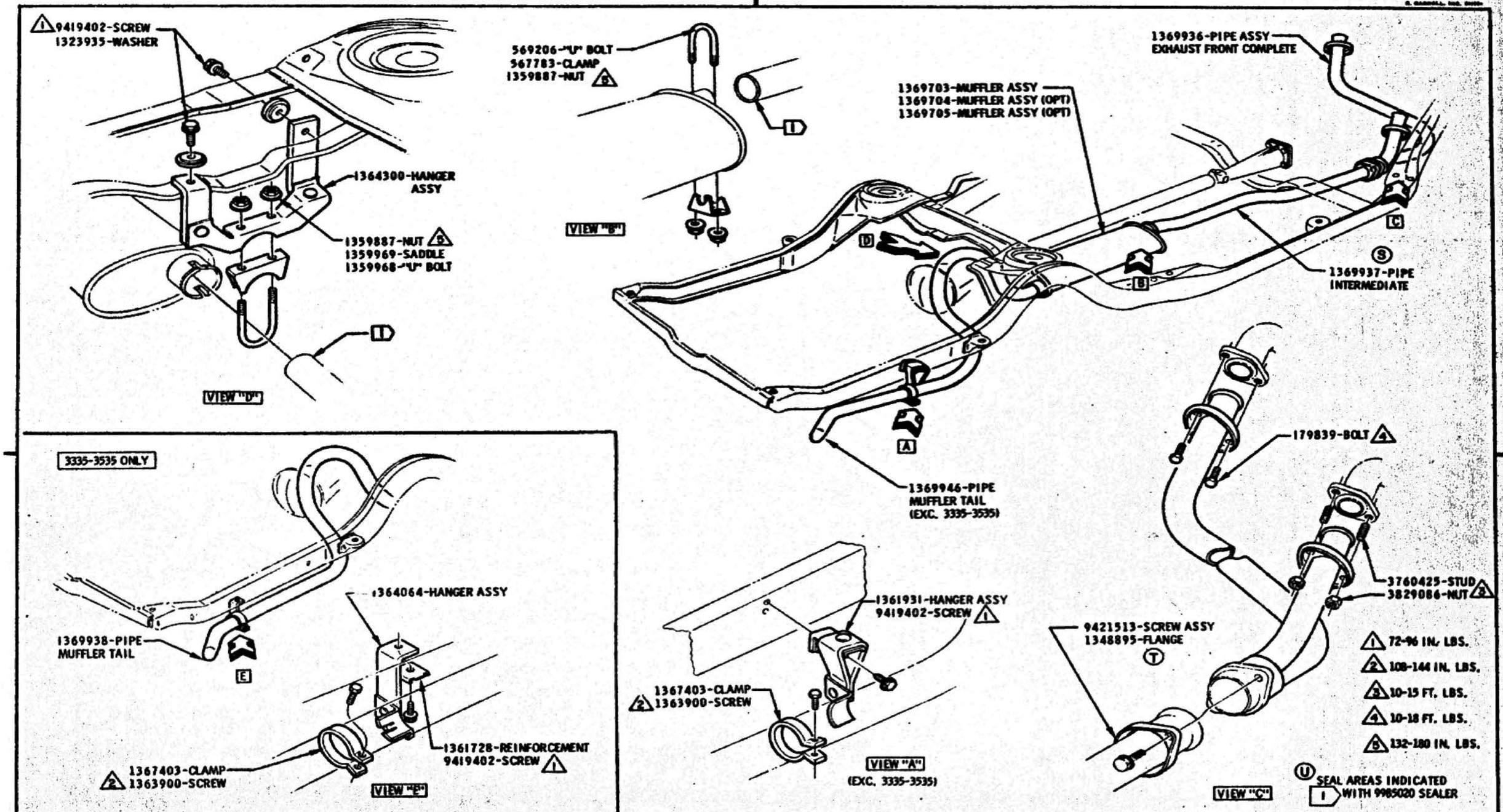

DATE	SYM	REVISION	DR.	CK.	DATE	SYM	REVISION	DR.	CK.	DATE	SYM	REVISION	DR.	CK.
										12-7-64	U	SEALER NOTE ADDED	GC	
										9-2-64	T	1348895-FLANGE ADDED		
										9-2-64	S	WAS 1372949-PIPE ASSY		
										6-14-64	R	1348895-FLANGE NO. REMVD.		

INSTALLATION	EXHAUST SYSTEM (V-6)		
DATE JANUARY 28, 1964	FIRST USED 1965	Oldsmobile GRAPHIC ILLUSTRATION	PAGE 8-2.1
DR. BY D. GUNTHER	SERIES F85	REF.	PART NO. 387279
CHECKED			
APPR.			
APPR.			

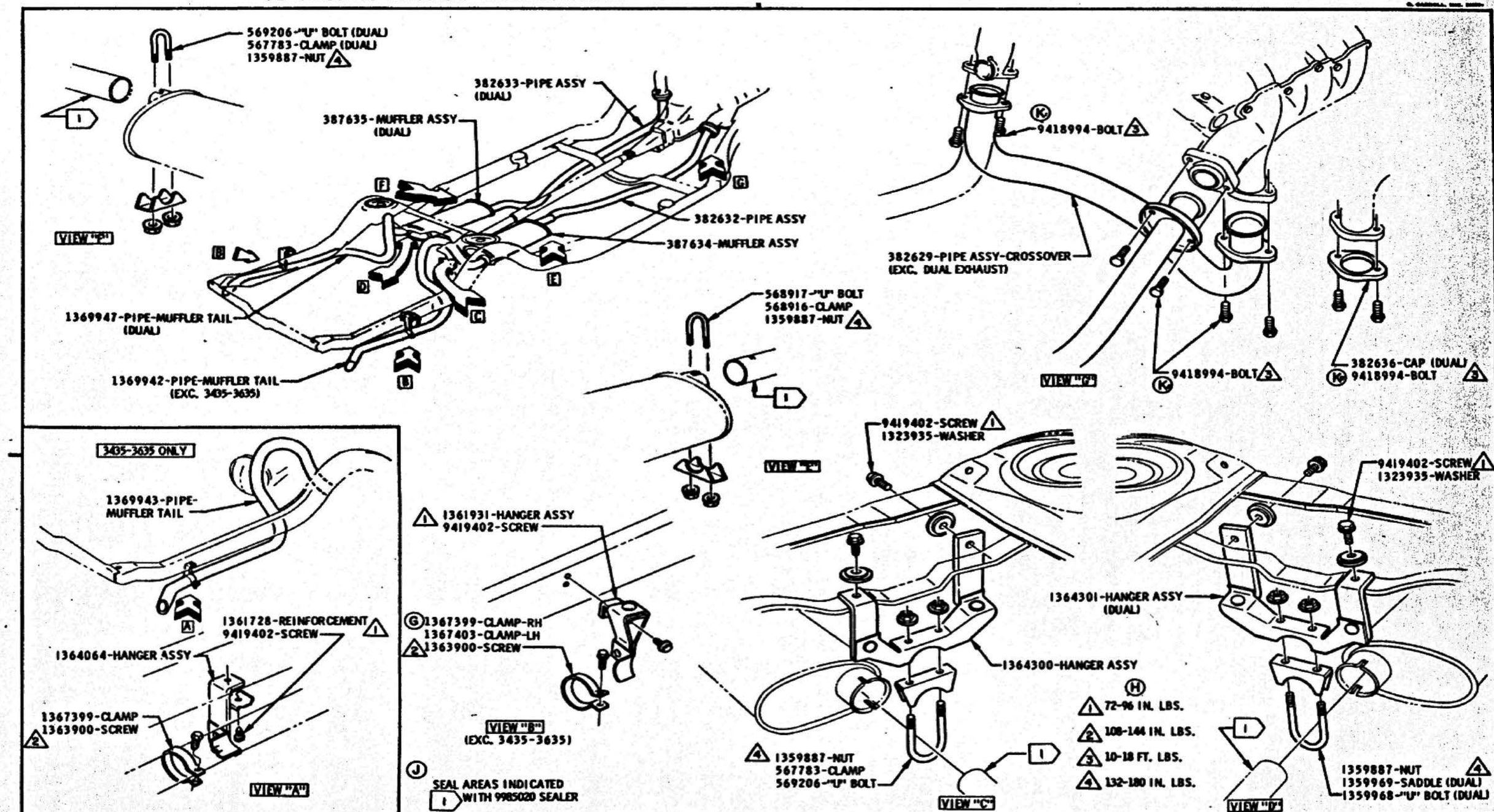

DATE	SYM	REVISION	DR.	CK.	DATE	SYM	REVISION	DR.	CK.	DATE	SYM	REVISION	DR.	CK.
					9-13-65	K	9418994 HAS 173841			3-21-64	C	387635 HAS 382635		
					12-7-64	J	SEALER NOTE ADDED			3-21-64	D	387634 HAS 382634		
					6-30-64	N	TORQUE ADDED			3-21-64	C	1369947 HAS 1361559		
					5-5-64	B	HAS 1357056 CLAMP			3-21-64	B	1369943 HAS 1357053		
					5-5-64	F	HAS 1362008 CLAMP			3-21-64	A	1369942 HAS 1359863		

INSTALLATION — EXHAUST SYSTEM (V-8)

DATE JANUARY 28, 1964 — FIRST USED 1965 — Oldsmobile GRAPHIC ILLUSTRATION — PAGE 8-2.2

DR. BY D. GUNTHER — CHECKED — APPR.

SERIES F 85 EXC. EXT. WAGONS — REF. — PART NO. 387279

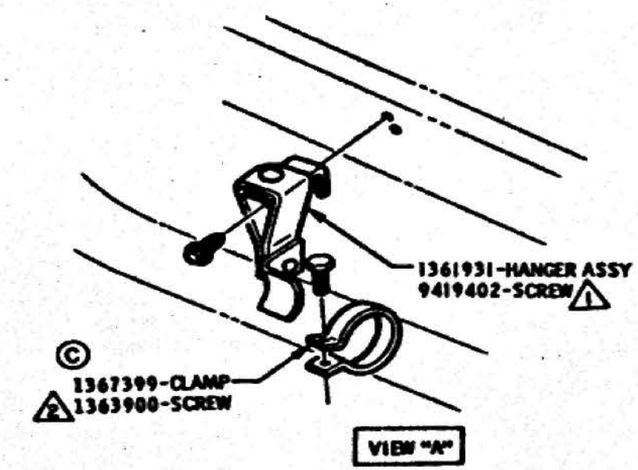

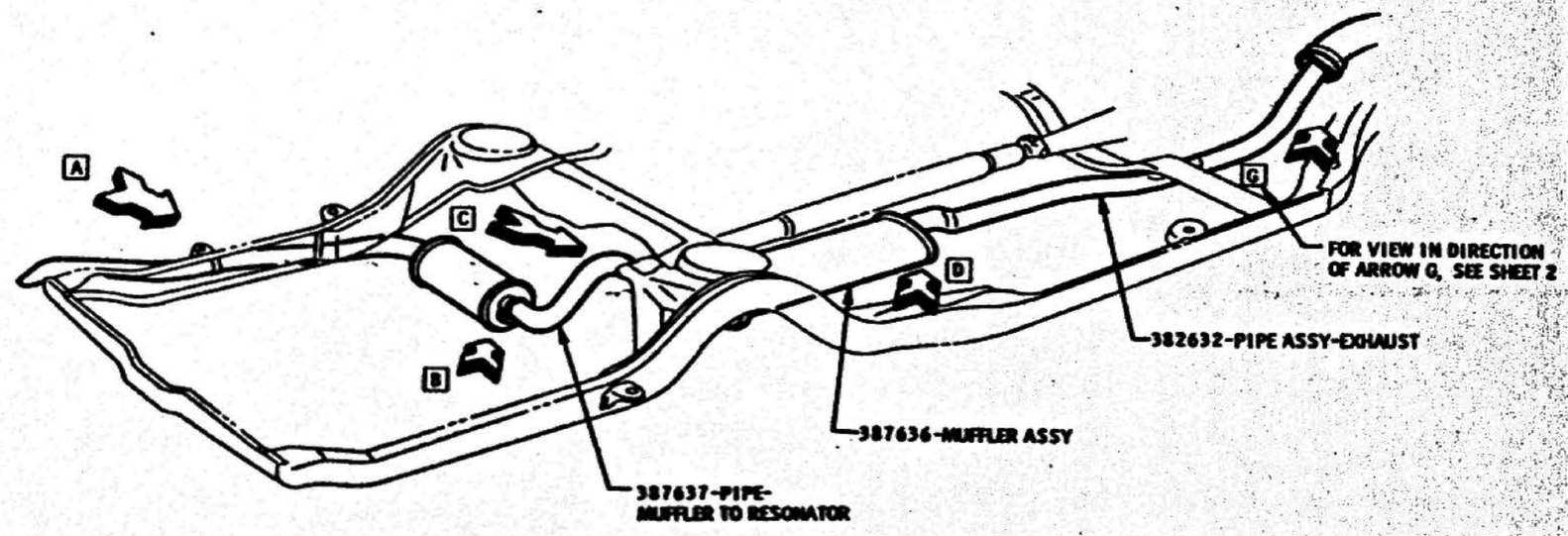

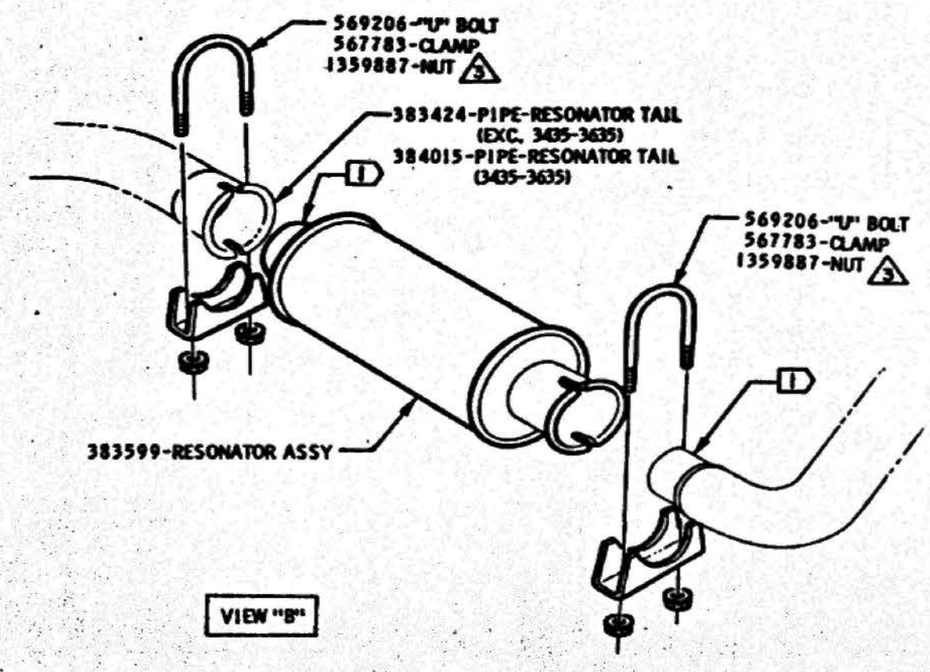

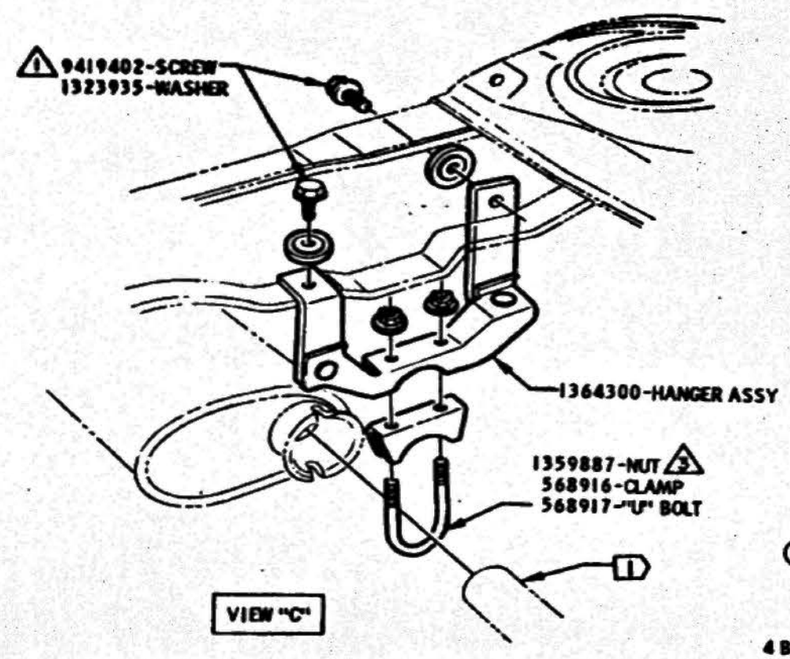

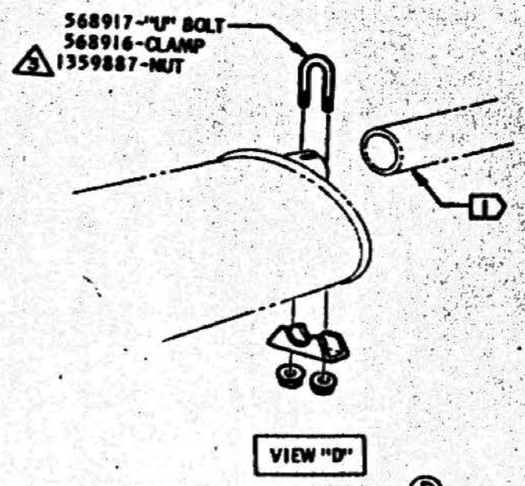

Ⓔ SEAL AREAS INDICATED I WITH 9985020 SEALER

4 BBL ENGINE EXC. EXT. WAGONS

Ⓓ
1 72-96 IN. LBS.
2 108-144 IN. LBS.
3 132-180 IN. LBS.

DATE	SYM	REVISION	DR.	CK.	DATE	SYM	REVISION	DR.	CK.	DATE	SYM	REVISION	DR.	CK.
										12-7-64	E	SEALER NOTE ADDED		
										5-30-64	D	TORQUE ADDED		
										5-5-64	C	WAS 1368006 CLAMP		
										3-21-64	B	WAS 383598 MUFFLER		
										3-21-64	A	WAS 383480 PIPE		

INSTALLATION **EXHAUST SYSTEM**

DATE JANUARY 28, 1964
DR. BY J. N. AYES
CHECKED
APPR. B. Tuttle
APPR.

FIRST USED 1965
SERIES F85
REF.

Oldsmobile GRAPHIC ILLUSTRATION

PAGE 8-2.3

PART NO. 387279

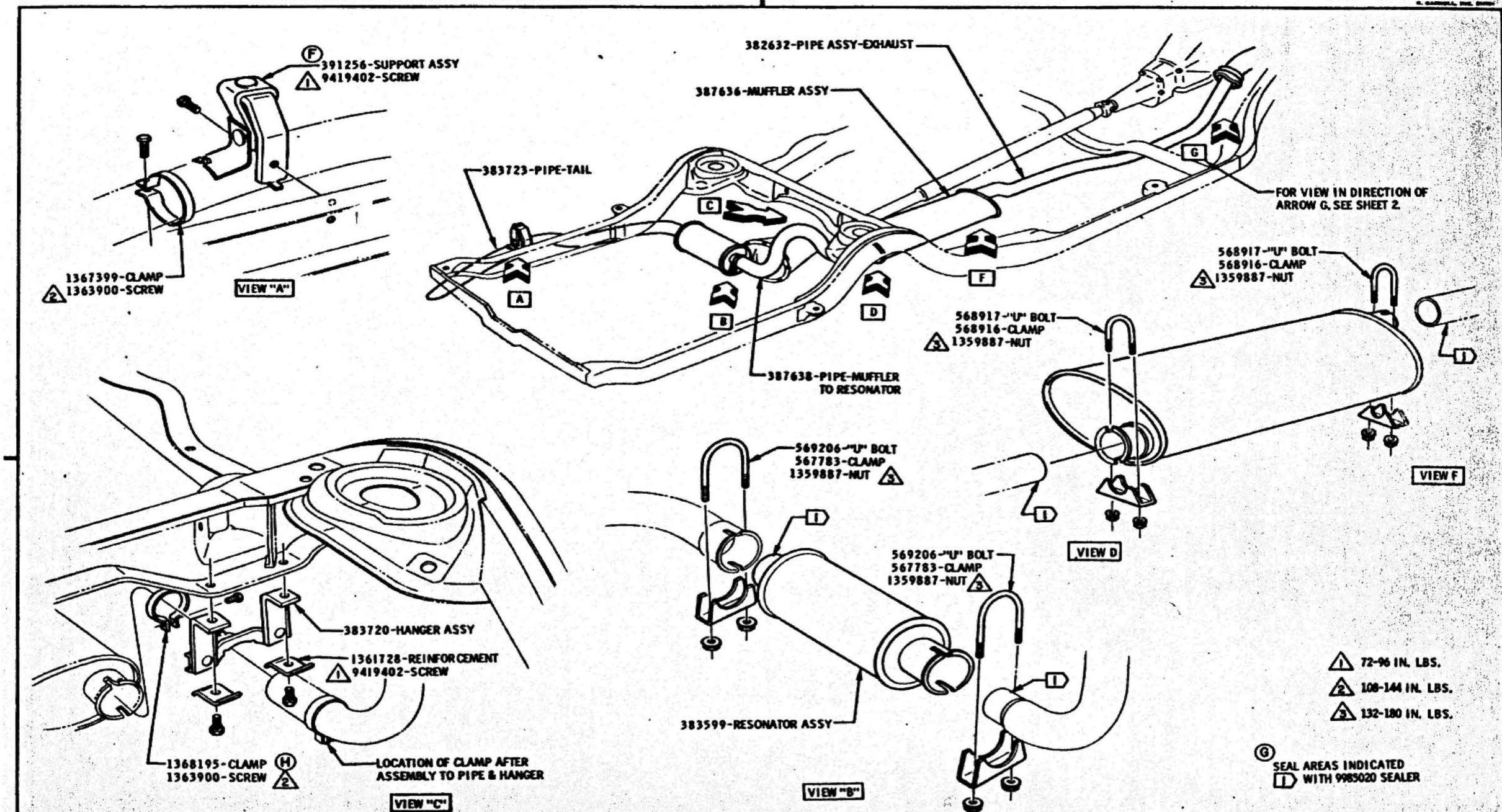

DATE	SYM	REVISION	DR.	CK.	DATE	SYM	REVISION	DR.	CK.	DATE	SYM	REVISION	DR.	CK.
										6-30-64	E	TORQUE ADDED		
										5-5-64	D	WAS 1356006 CLAMP		
					12-14-64	H	FASTENINGS REVISED			3-21-64	C	387636 WAS 383598		
					12-7-64	G	SEALER NOTE ADDED			3-21-64	B	387638 WAS 383719		
					12-7-64	F	391256 WAS 383724			2-28-64	A	1359887 WAS 431729		

INSTALLATION **EXHAUST SYSTEM**

DATE JANUARY 28, 1964 — DR. BY B. ACHTERHOFF — CHECKED — APPR. C. Tondra — APPR.

FIRST USED 1965 — Oldsmobile Graphic Illustration — SERIES F-85 (EXT. WAGONS) — REF.

PAGE 8-2.4

PART NO. 387279

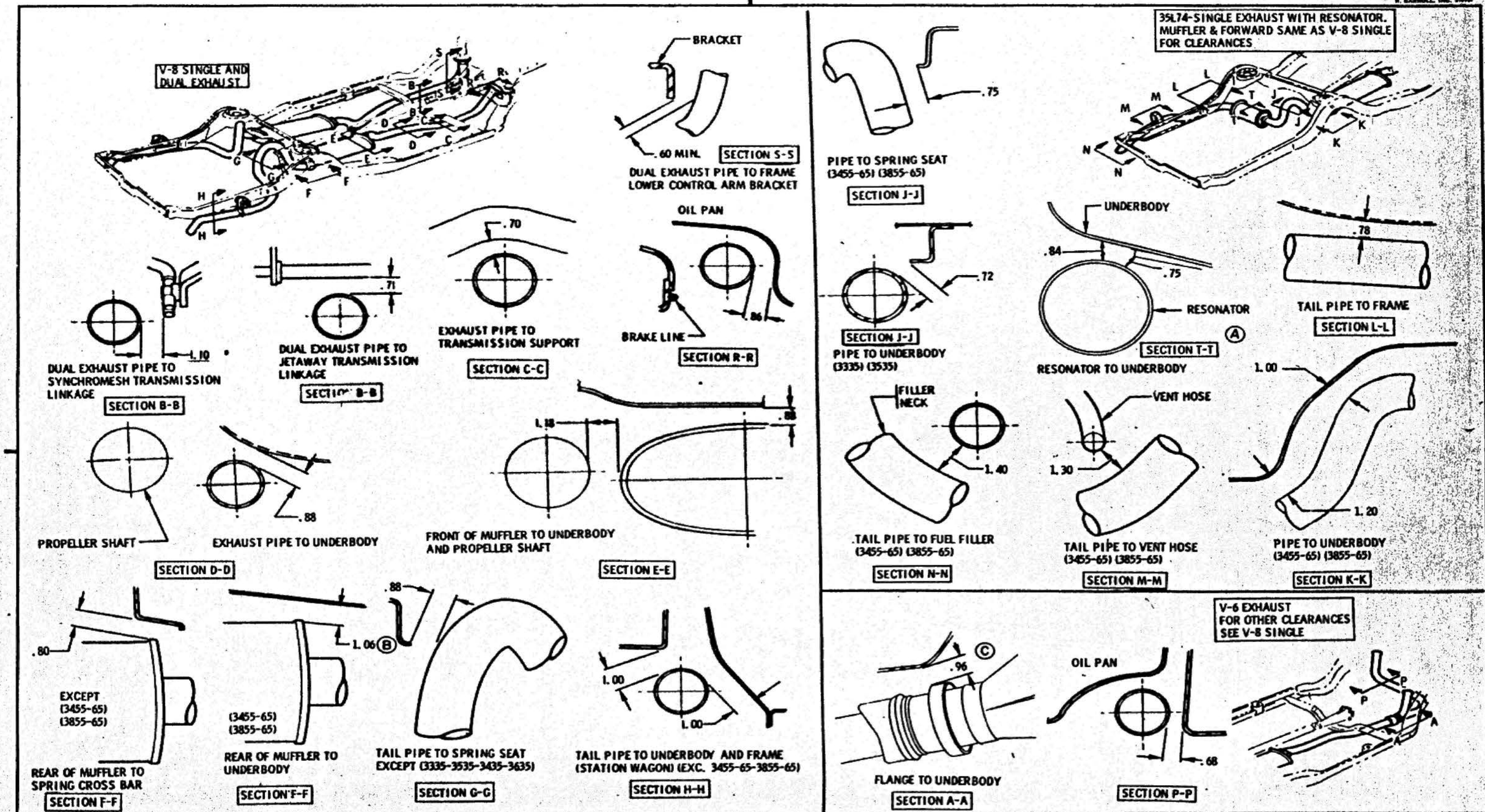

DATE	SYM	REVISION	DR.	CK.	DATE	SYM	REVISION	DR.	CK.	DATE	SYM	REVISION	DR.	CK.
										4-1-64	C	.96 WAS .74		
										3-26-64	B	1.06 WAS .88		
										3-9-64	A	SECTION T-T ADDED		

INSTALLATION	EXHAUST SYSTEM (CLEARANCES)		SHEET 5 OF 5
DATE JANUARY 28, 1964	FIRST USED 1965	Oldsmobile GRAPHIC ILLUSTRATION	PAGE 8-2.5
DR. BY D. GUNTHER			
CHECKED	SERIES F 85	REF.	PART NO. 387279
APPR.			
APPR.			

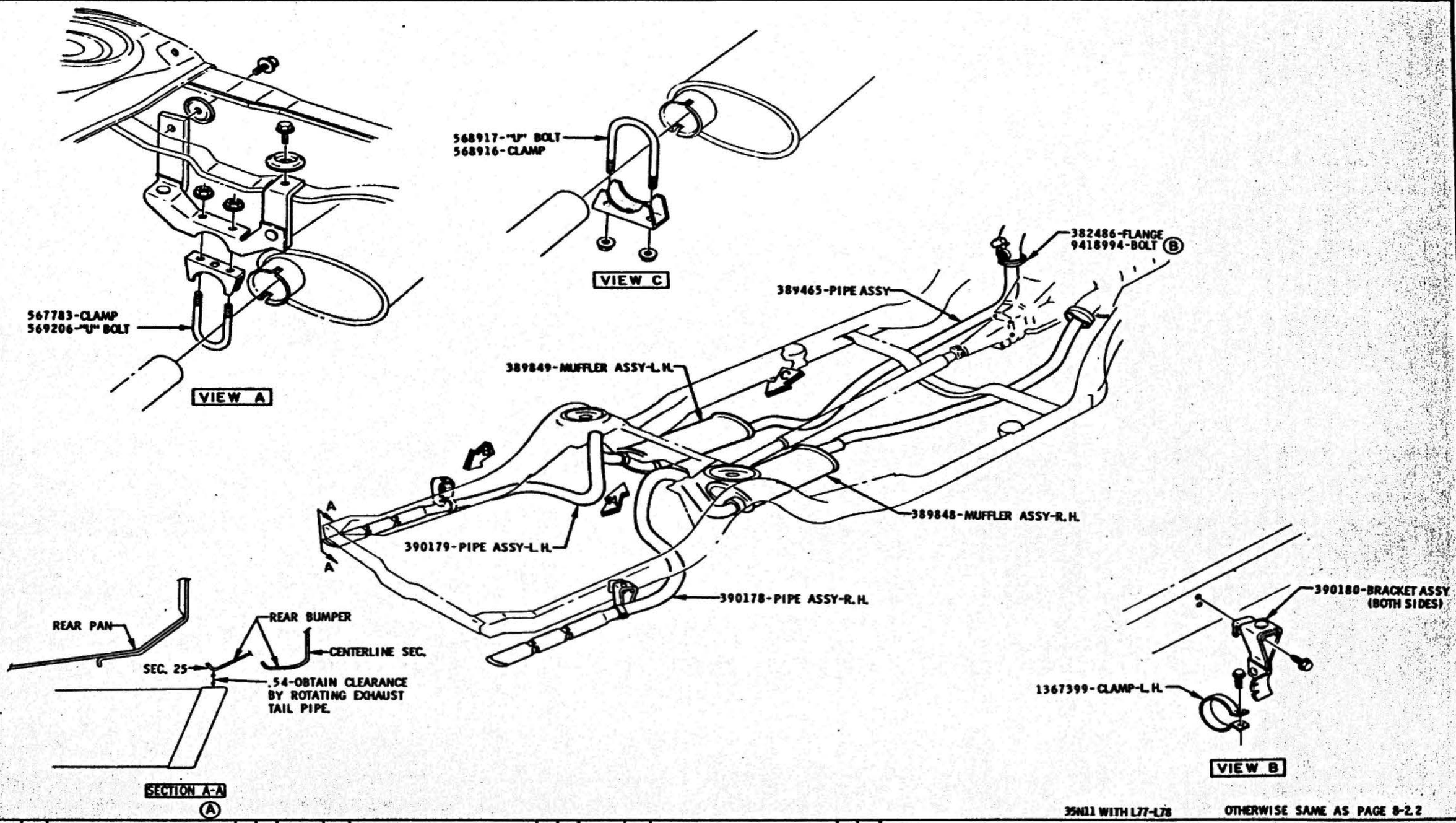

35N11 WITH L77-L78 OTHERWISE SAME AS PAGE 8-2.2

DATE	SYM	REVISION	DR.	CK.	DATE	SYM	REVISION	DR.	CK.	DATE	SYM	REVISION	DR.	CK.
										9-18-65	B	9418994 WAS 179841		
										9-17-64	A	SEC. A-A ADDED		

INSTALLATION: EXHAUST SYSTEM

DATE JULY 29, 1964
DR. BY W.C. MASON
CHECKED
APPR.
APPR.

FIRST USED: 1965
SERIES: F85
REV.
Oldsmobile Service ILLUSTRATION

PAGE: 8-2.6
PART NO.: 387279

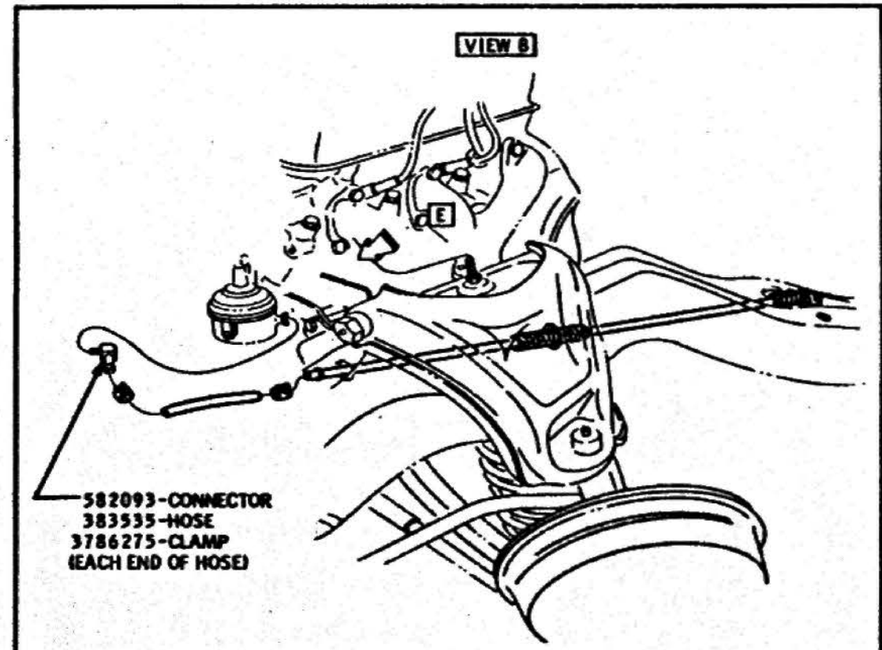

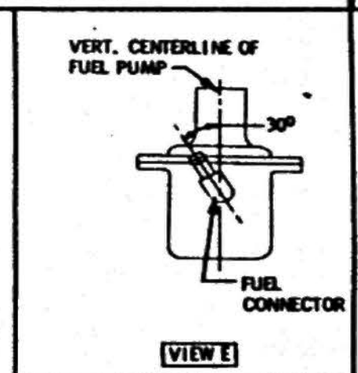

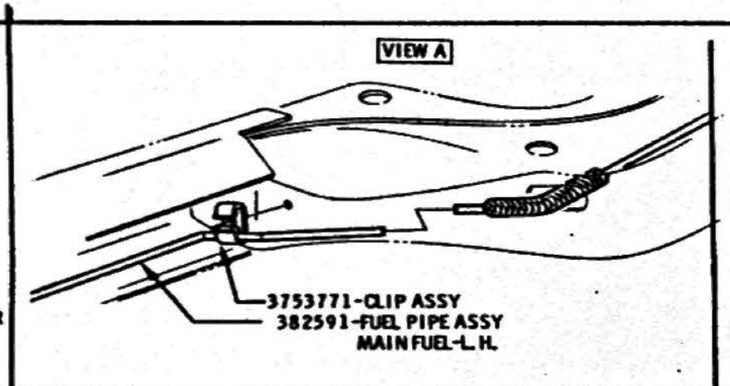

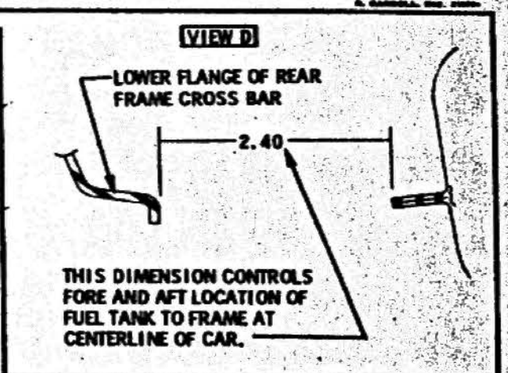

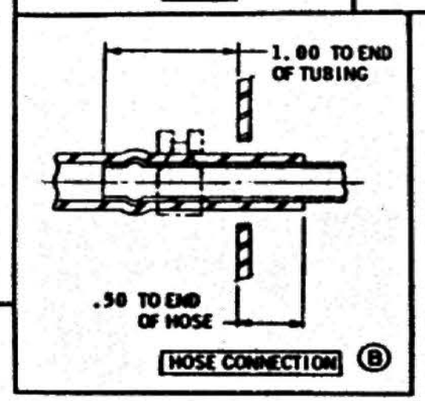

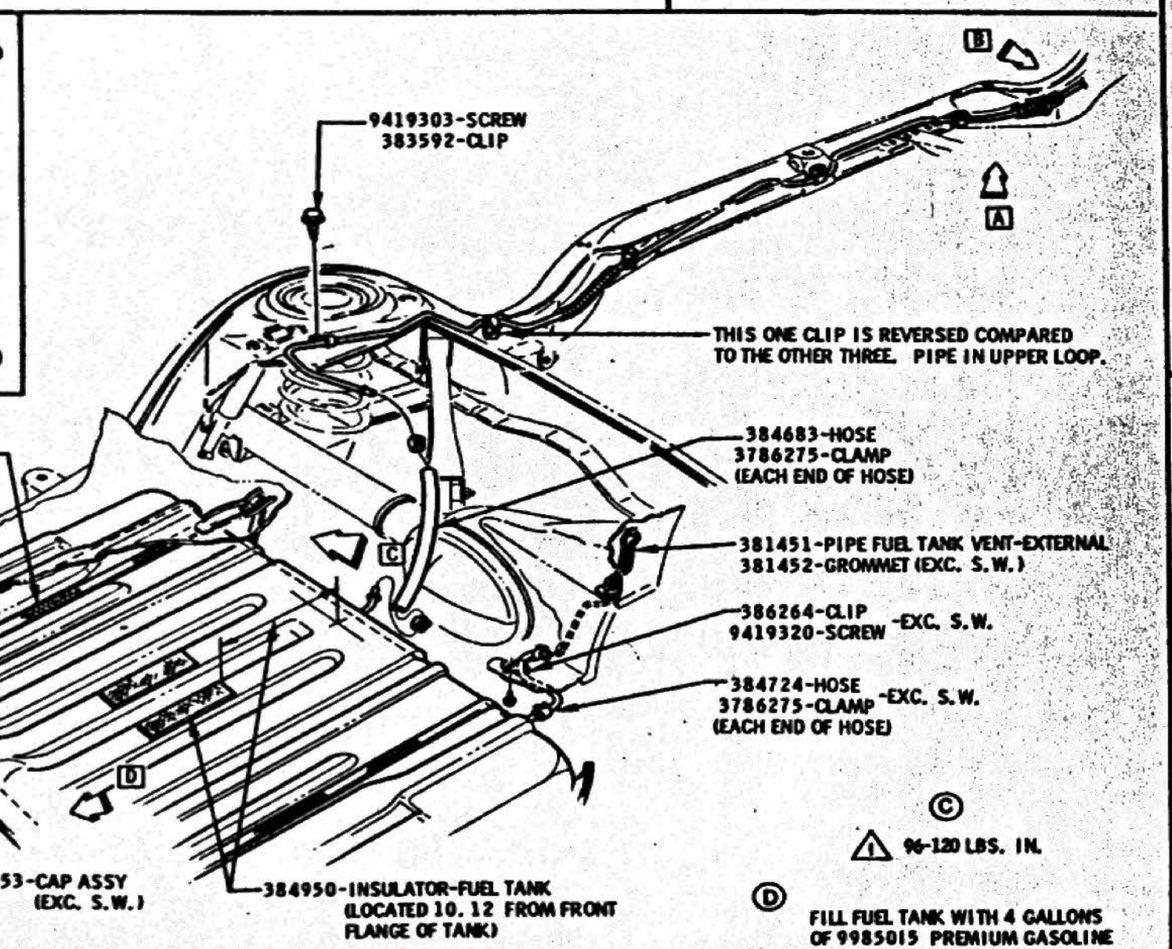

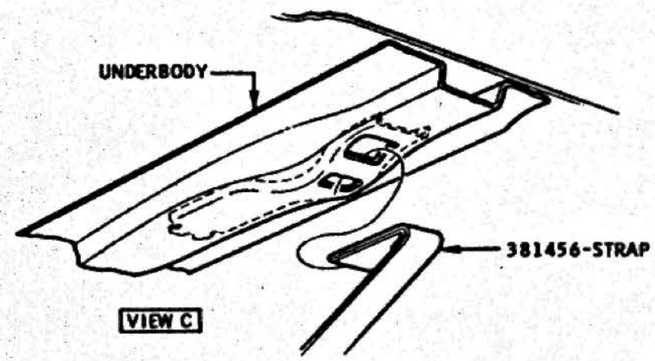

FUEL & FUEL RETURN LINE REPAIR PROCEDURE

1. CUT OUT DAMAGED PORTION OF FUEL LINE.
2. CUT A PIECE OF HOSE 4" LONGER THAN PORTION OF LINE REMOVED. HOSES 381454 (FUEL) AND 381443 (FUEL RETURN) MAY BE USED.
3. SLIDE HOSE 2" ONTO EACH PORTION OF FUEL PIPE.
4. CLAMP HOSE TO PIPE ON EACH SIDE OF REPAIR. USE CLAMP 3786275 ON FUEL LINES AND CLAMP 9770783 ON FUEL RETURN LINES.

DATE	SYM	REVISION	DR.	CK.	DATE	SYM	REVISION	DR.	CK.	DATE	SYM	REVISION	DR.	CK.
										11-27-64	D	NOTE ADDED	GC	
										9-1-64	C	WAS 84-108 LBS. IN.		
										7-7-64	B	VIEW REVISED	MN	
										7-1-64	A	TORQUE SPEC. ADDED	JAS	

INSTALLATION FUEL SYSTEM (V-8)

DATE FEBRUARY 20, 1964
DR. BY D. GUNTHER
CHECKED
APPR.
APPR.

FIRST USED 1965

Oldsmobile classic ILLUSTRATION

PAGE 8-3.1

REVISED F85

REF.

PART NO. 387278

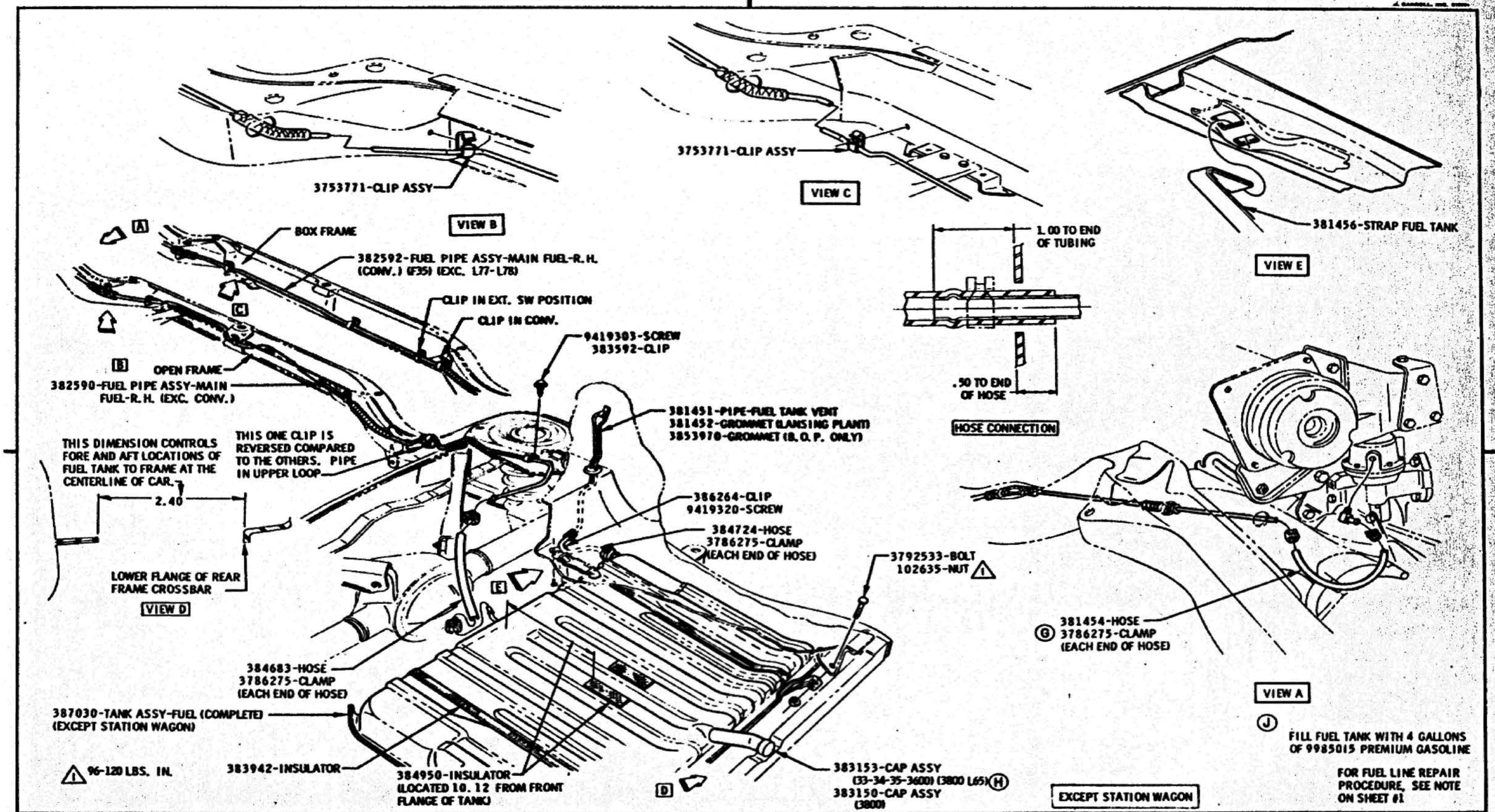

DATE	SYM	REVISION	DR.	CK.	DATE	SYM	REVISION	DR.	CK.	DATE	SYM	REVISION	DR.	CK.
					11-27-64	J	FILL NOTE ADDED	GC		9-2-64	E	NOTE REVISED		
					10-26-64	H	MODEL ADDED			8-18-64	D	3853970 ADDED		
					7-16-64	G	382093-REMOVED			8-18-64	C	V8E REMOVED		
					9-2-64	F	WAS 84-108 LBS. IN.			7-7-64	B	VIEW ADDED		
										7-1-64	A	TORQUE SPEC. ADDED		

INSTALLATION **FUEL SYSTEM (V-8)**

DATE FEBRUARY 20, 1964 | DR. BY PIONEER | CHECKED | APPR. | APPR.

FIRST USED 1965 | Oldsmobile GRAPHIC ILLUSTRATION | SERIES F85 | REF.

PAGE 8-3.2

PART NO. 387278

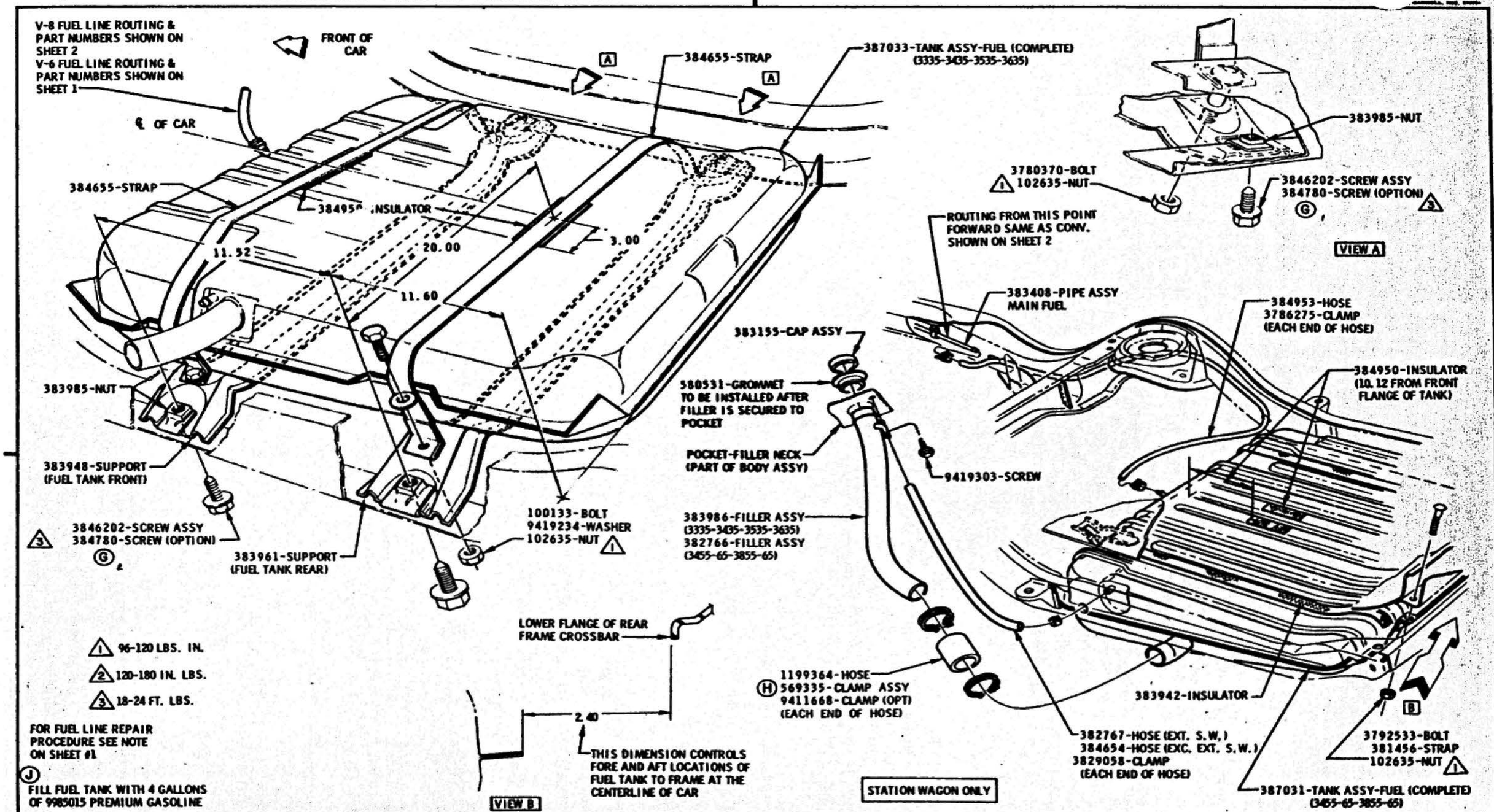

DATE	SYM	REVISION	DR.	CK.	DATE	SYM	REVISION	DR.	CK.	DATE	SYM	REVISION	DR.	CK.
										9-2-64	E	WAS 84-108 LBS. IN.		
					11-27-64	J	FILL NOTE ADDED	CG		7-1-64	D	TORQUE SPEC. ADDED		
					11-9-64	H	WAS 381990-CLAMP ASSY			5-21-64	C	WAS 9414322		
					10-6-64	G	WAS 383099-BOLT ASSY			5-6-64	B	WAS 3847756		
					9-2-64	F	WAS TORQUE 1			3-24-64	A	3635 WAS 3655		

INSTALLATION	FUEL SYSTEM		
DATE FEBRUARY 30, 1964	FIRST USED 1965	Oldsmobile Service ILLUSTRATION	PAGE 8-3.3
DR. BY R. ACHTERHOF	SERIES F85	REV.	PART NO. 387278
CHECKED			
APPR.			
APPR.			

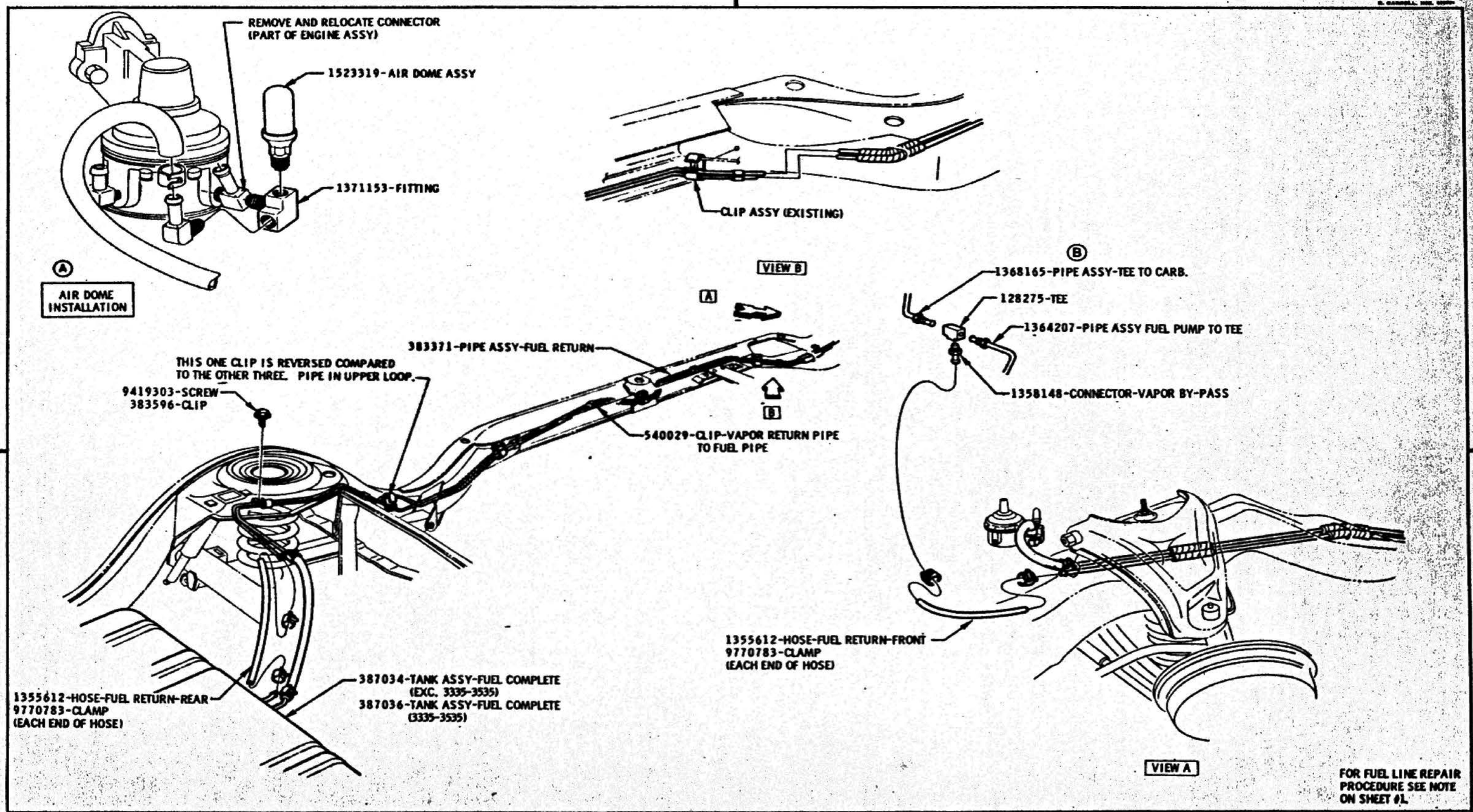

4-14-64	B	*WAS 1364205 PIPE ASSY'S	
4-14-64	A	VIEW ADDED	

INSTALLATION **FUEL SYSTEM (V-6 FUEL RETURN)**

DATE FEBRUARY 20, 1964
DR. BY S. McDONALD
CHECKED Morgenhart
APPR. [illegible]

FIRST USED 1965 — Oldsmobile Graphic ILLUSTRATION — PAGE 8-3.4

SERIES F85 — REF. — PART NO. 387278

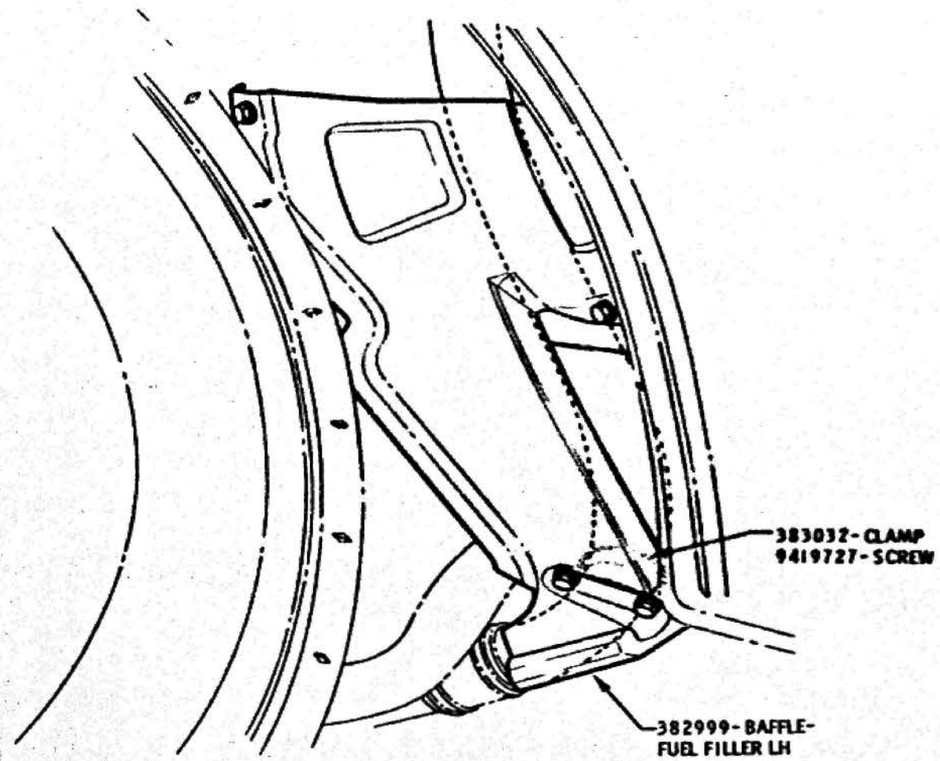

3455-3465-3855-3865

VIEW IN DIRECTION OF ARROW

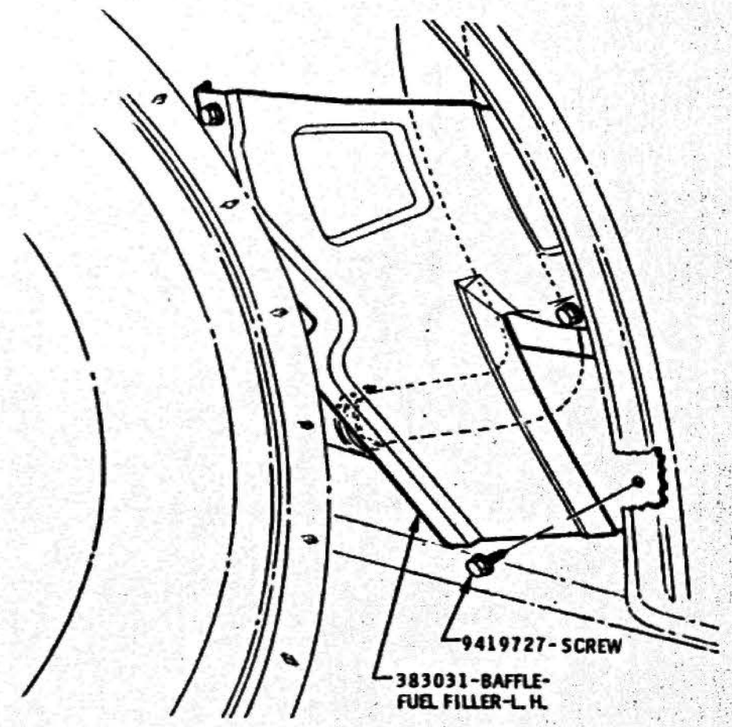

3335-3435-3535-3635

VIEW IN DIRECTION OF ARROW

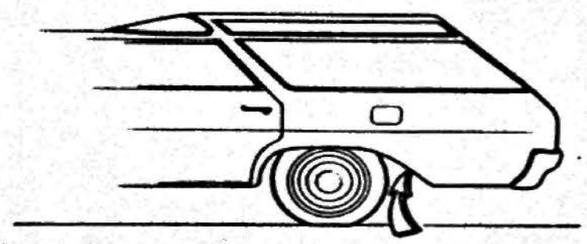

FUEL FILLER NECK BAFFLE INSTALLATION

DATE	SYM	REVISION	DR.	CK.	DATE	SYM	REVISION	DR.	CK.	DATE	SYM	REVISION	DR.	CK.

INSTALLATION	FUEL SYSTEM		
DATE FEBRUARY 20, 1964	FIRST USED 1965	Oldsmobile GRAPHIC ILLUSTRATION	PAGE 8-3.5
DR. BY C.V. BEACHNAU	SERIES F85	REF.	PART NO. 387278
CHECKED			
APPR.			
APPR.			

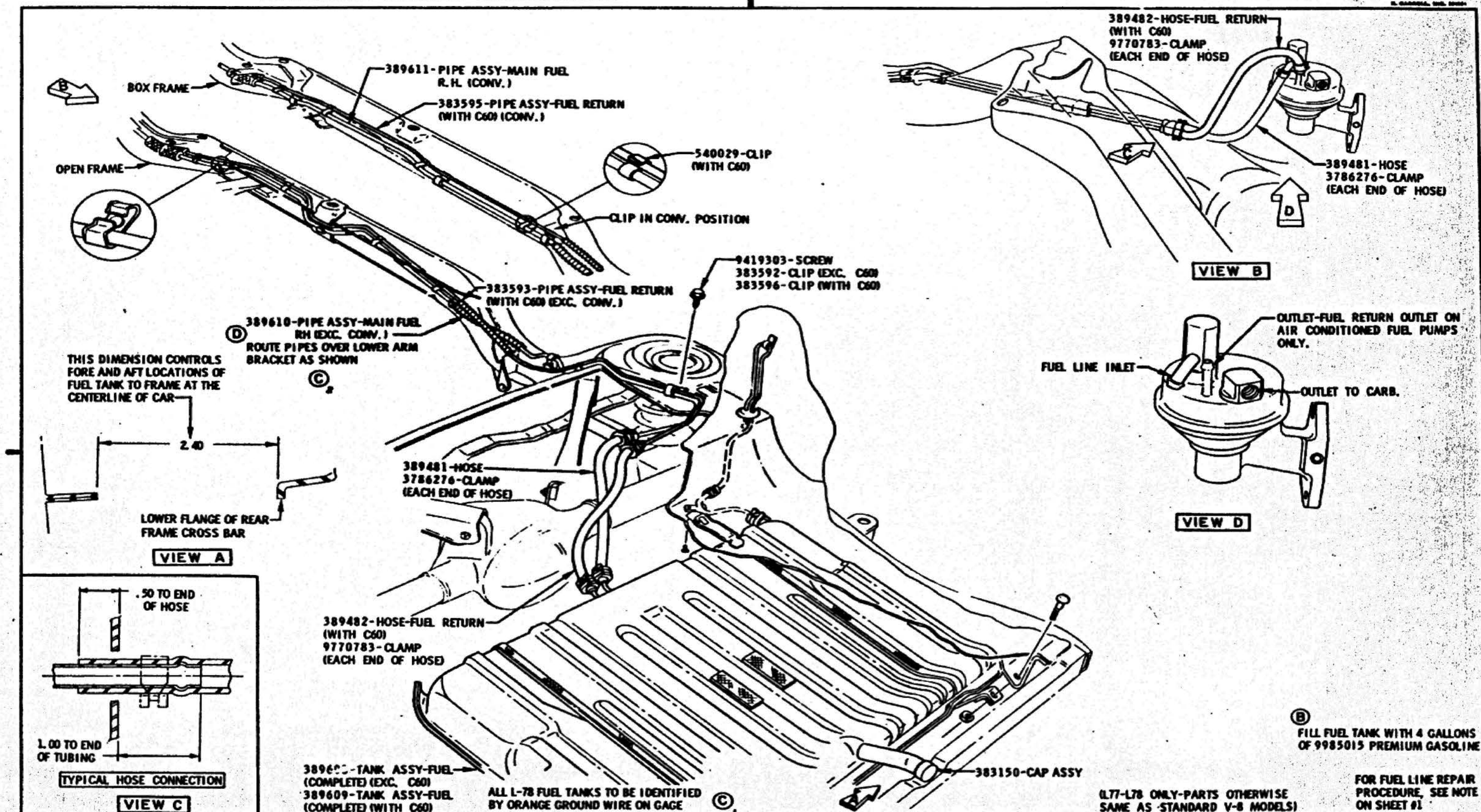

DATE	SYM	REVISION	DR.	CK.	DATE	SYM	REVISION	DR.	CK.	DATE	SYM	REVISION	DR.	CK.
										2-6-65	D	NOTE REVISED		
										12-21-64	C2	NOTE ADDED		
										11-27-64	B	FILL NOTE ADDED		
										7-30-64	A	389481 WAS 389480		

INSTALLATION FUEL SYSTEM

DATE JULY 7, 1964
DR. BY W.C. MASON
CHECKED
APPR.
APPR.

FIRST USED 1965

Oldsmobile Graphic Illustration

SERIES F85

REF.

PAGE 8-3.6

PART NO. 387278

STEERING

DRAWING NO.	DRAWING NAME	PAGE NO.
386743	STEERING COLUMN FASTENING	9 - 2.1
387616	STEERING GEAR - MANUAL/POWER	9 - 3.1
387444	STEERING WHEEL	9 - 4.1
387293	STEERING LINKAGE	9 - 5.1
387285	TILT STEERING COLUMN	9 - 6.1
388188	STEERING COLUMN TAPE IDENTIFICATION CHART	9 - 7.1
		9 - 8.1
386840	DELUXE STEERING WHEEL	9 - 9.1
380103	POWER STEERING CHART	9 - 10.1

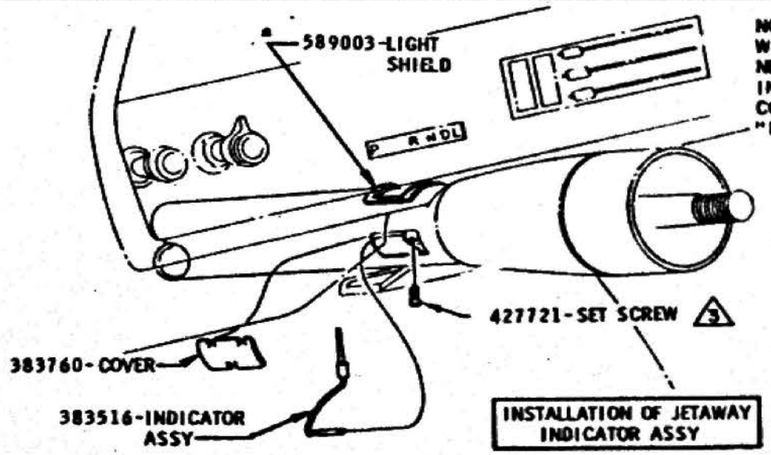

NOTE:
WITH SHIFT ROD INSTALLED IN NEUTRAL POSITION, INSERT INDICATOR IN HOLE IN STEERING COLUMN SO NEEDLE POINTS TO "N" AND TIGHTEN SET SCREW.

INSTALLATION OF JETAWAY INDICATOR ASSY

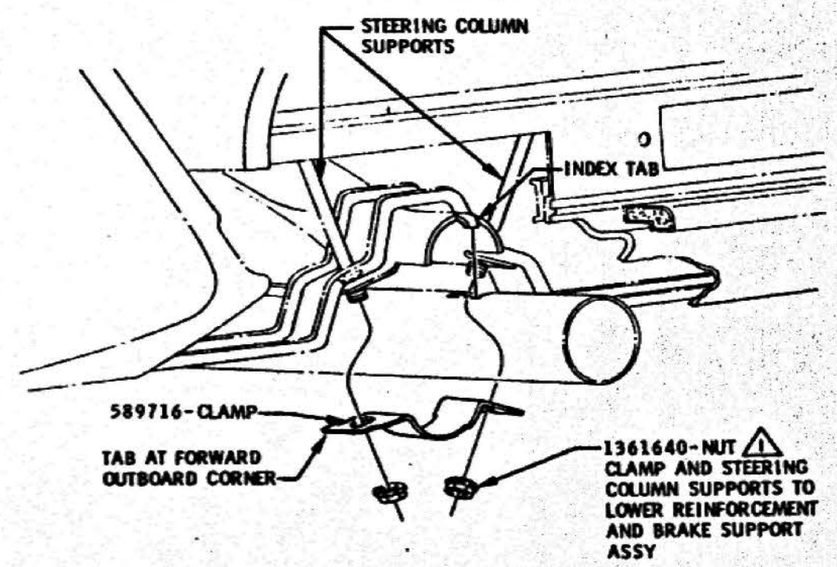

FASTENINGS AT INSTRUMENT PANEL

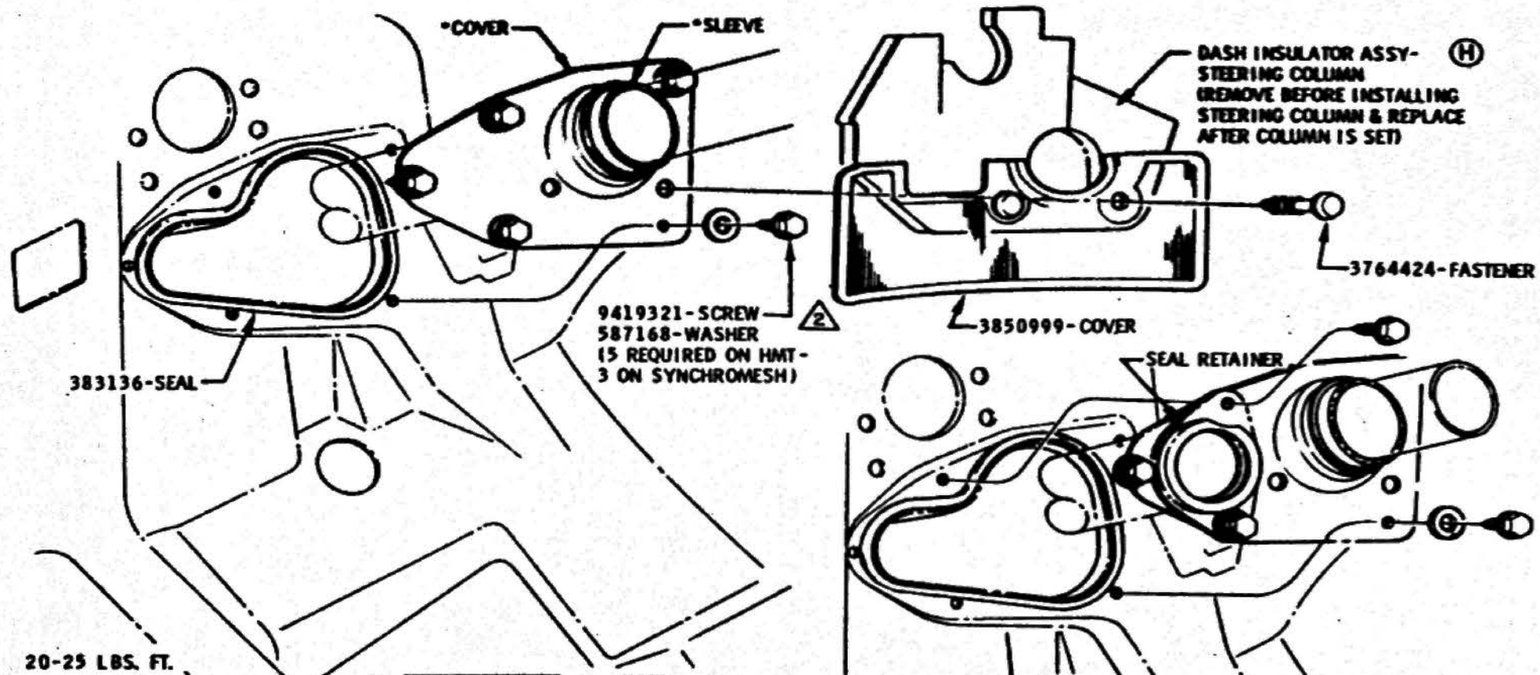

1 20-25 LBS. FT.
2 36-60 LBS. IN. G
3 12-18 LBS. IN.

FASTENING AT TOE PAN

NOTE:
ALL PART NAMES MARKED WITH AN ASTERISK * ARE PART OF STEERING COLUMN ASSEMBLIES

FASTENING AT TOE PAN WITH SYNCHROMESH

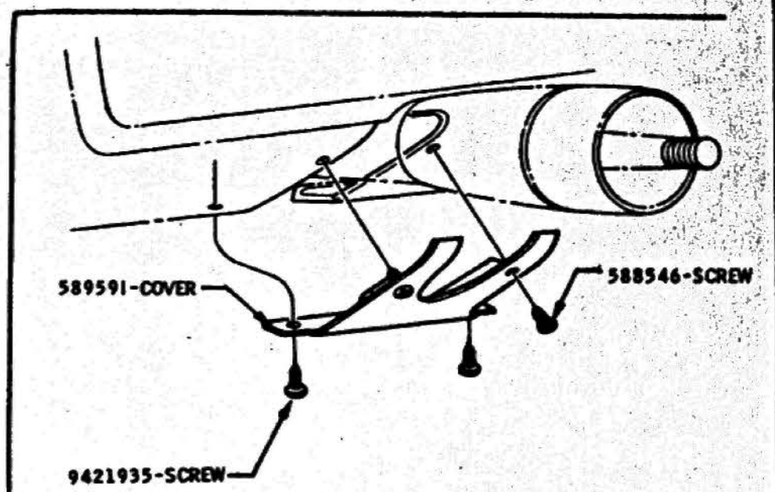

FASTEN COVER TO INSTRUMENT PANEL AT THE BOTTOM AND USE EXISTING HOLES IN TOP OF COVER AS A GAGE, DRILL TWO .120 DIA HOLES

INSTALLATION OF LOWER STEERING COLUMN COVER

DATE	SYM	REVISION	DR.	CK.	DATE	SYM	REVISION	DR.	CK.	DATE	SYM	REVISION	DR.	CK.
										4-11-64	E	PART NO. ADDED		VP
										2-11-64	D	PAINT NOTE REMOVED		VP
					3-11-65	H	NOTE REVISED		VP	1-23-64	C	FASTENINGS REV'D		VP
					11-24-64	G	TORQUE SPECS ADDED			1-14-64	B	REVISED TO DETAIL		VP
					6-16-64	F	TORQUE ADDED		VP	1-4-64	A	PART NO. ADDED		VP

INSTALLATION
DATE NOV. 18 1963
DR. BY C.E. MAY
CHECKED H. VAN PELT
APPR.
APPR.

STEERING COLUMN FASTENING

FIRST USED 1965 — Oldsmobile GRAPHIC ILLUSTRATION — PAGE 9-2.1

DESIGNER F85 — REV. 94-98 95 M 93 — PART NO. 386743

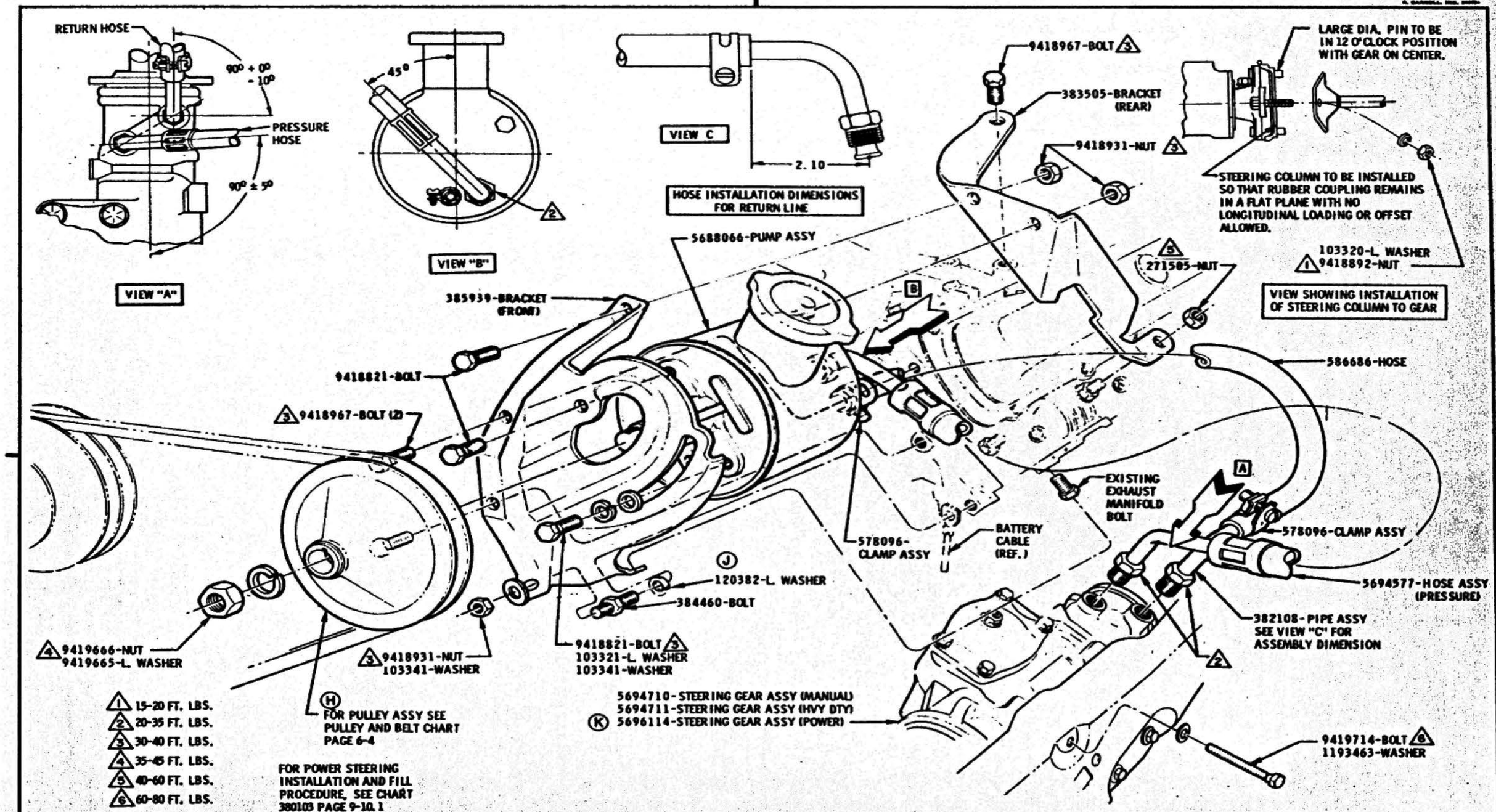

DATE	SYM	REVISION	DR.	CK.	DATE	SYM	REVISION	DR.	CK.	DATE	SYM	REVISION	DR.	CK.
					5-13-65	K	WAS 5694712	JJ		7-10-64	E	TORQUE SPEC ADDED	CT	
					3-11-65	J	120382-REINSTATED			7-10-64	D	5694711 ADDED		
					10-30-64	H	NOTE REVISED			4-3-64	C	WAS 5691678	FH	
					8-11-64	G	TORQUE WAS 10-15 FT. LBS.	JA		3-14-64	B	5694577 WAS 5691966	RA	
					8-11-64	F	120382-WASHER REMOVED			3-14-64	A	WAS 5679270	RA	

INSTALLATION — **STEERING GEAR—MANUAL/POWER (V-8)**

DATE FEBRUARY 18, 1964 — FIRST USED 1965 — Oldsmobile GRAPHIC ILLUSTRATION — PAGE 9-3.1

DR. BY L. HARTZKE — SERIES F85 — REF. 35N40 — PART NO. 387616

CHECKED — APPR. — APPR.

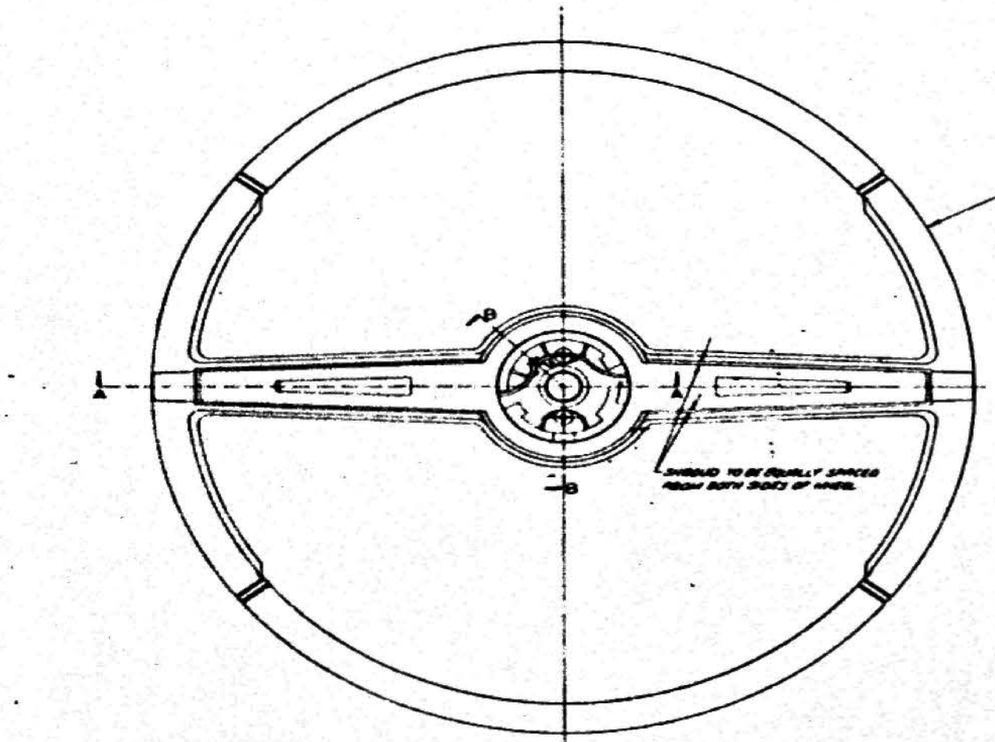

	9741430	WHEEL ASSY - BLACK
	9742173	WHEEL ASSY - MED SLATE
	9742174	WHEEL ASSY - MED GREEN
	9742175	WHEEL ASSY - MIDNIGHT GREEN
	9742176	WHEEL ASSY - MED BLUE
	9742177	WHEEL ASSY - MED FAWN
⑥④	9743224	WHEEL ASSY - RED
	9742179	WHEEL ASSY - MED RED
	9742180	WHEEL ASSY - MED TURQUOISE

AS PURCHASED (FOR MOLDING ASSY BASIC DIMENSIONS SEE-9741210)

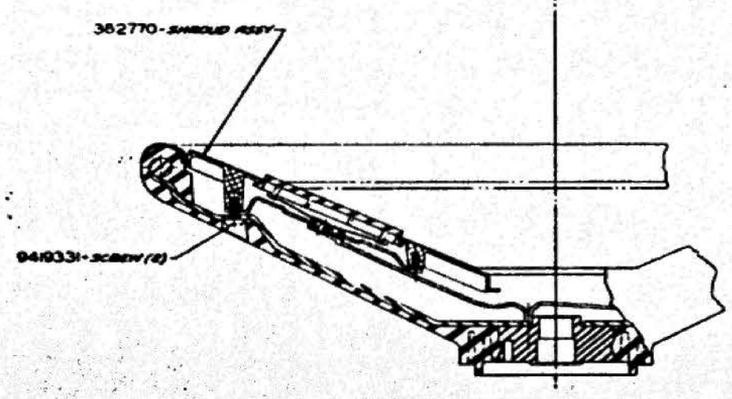

SECTION A-A

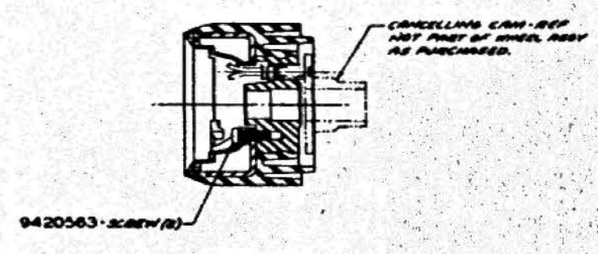

SECTION B-B

STEERING WHEEL ASSEMBLIES COMPLETE	
384131	BLACK
386867	MED SLATE
386868	MED GREEN
386869	MIDNIGHT GREEN
386870	MED BLUE
386871	MED FAWN
⑥④ 386486	RED
386873	MED RED
386874	MED TURQUOISE

DO NOT SCALE

CHART-STEERING WHEEL

386866

OLDSMOBILE DIVISION

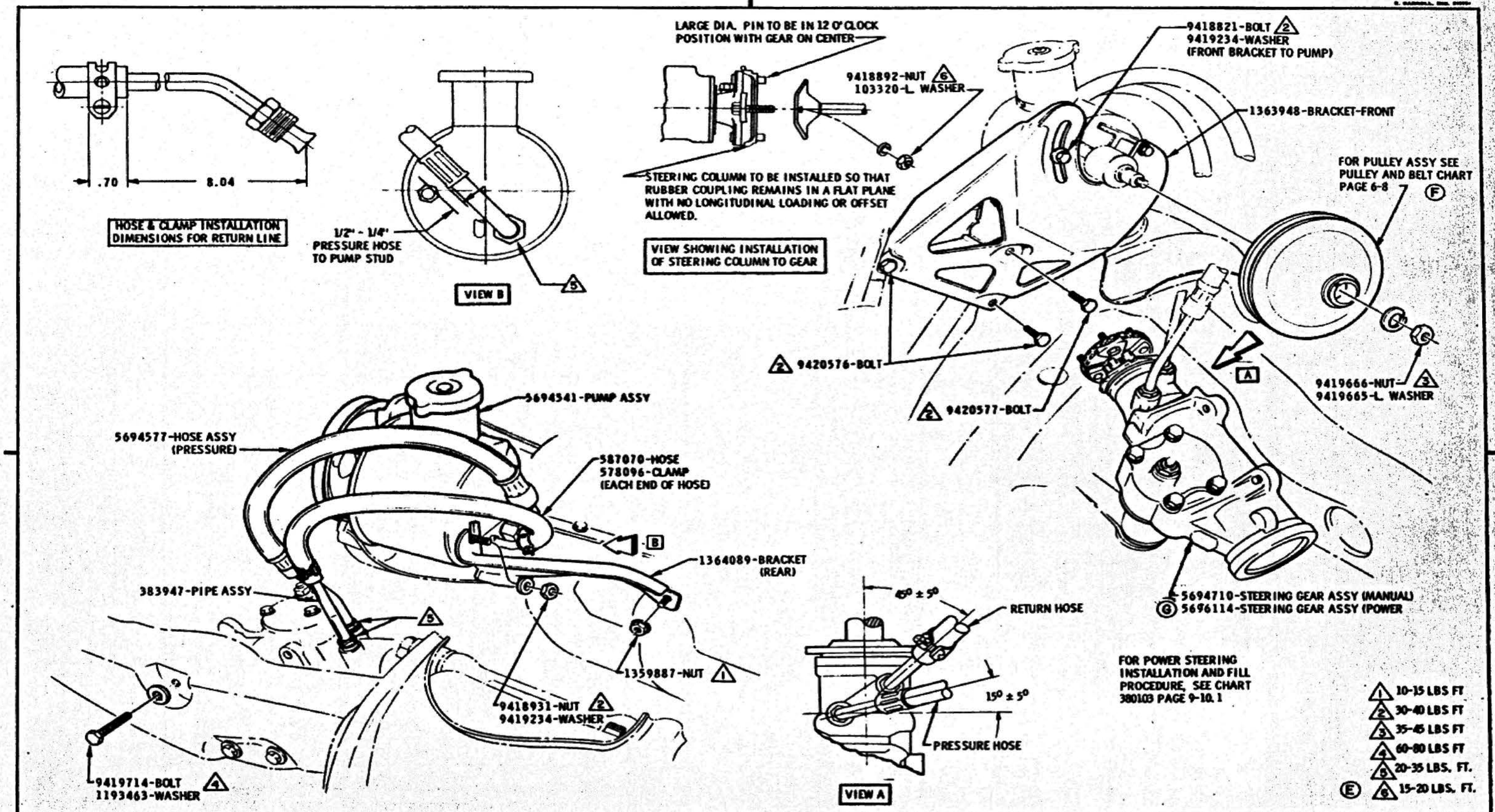

DATE	SYM	REVISION	DR.	CK.	DATE	SYM	REVISION	DR.	CK.	DATE	SYM	REVISION	DR.	CK.
										8-1-64	E	TORQUE WAS 10-15 LBS FT		
										7-10-64	D	TORQUE SPEC ADDED		
										6-25-64	C	TORQUE SPEC ADDED		
					5-13-65	G	WAS 5694712			4-14-64	B	WAS 5691673		
					10-30-64	F	NOTE REVISED			3-14-64	A	WAS 5679270		

INSTALLATION — STEERING GEAR — MANUAL/POWER (V-6)

DATE FEBRUARY 20, 1964
DR. BY R. ACHTERHOF
CHECKED
APPR.
APPR.

FIRST USED 1965 — Oldsmobile GRAPHIC ILLUSTRATION — PAGE 9-3.2

SERIES F85 — REF. — PART NO. 387616

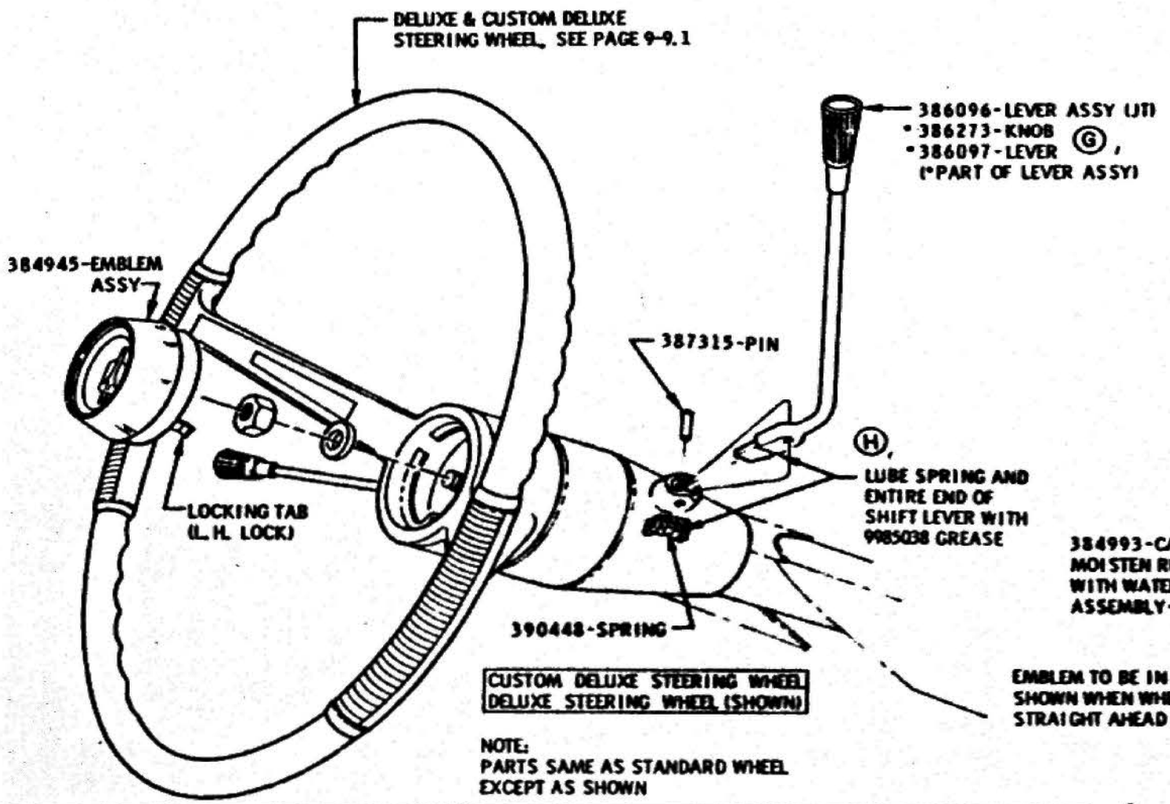

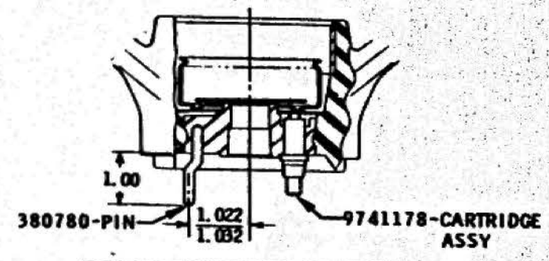

TILT WHEEL CANCELING PIN & CARTRIDGE ASSY INSTALLATION FOR STANDARD WHEEL

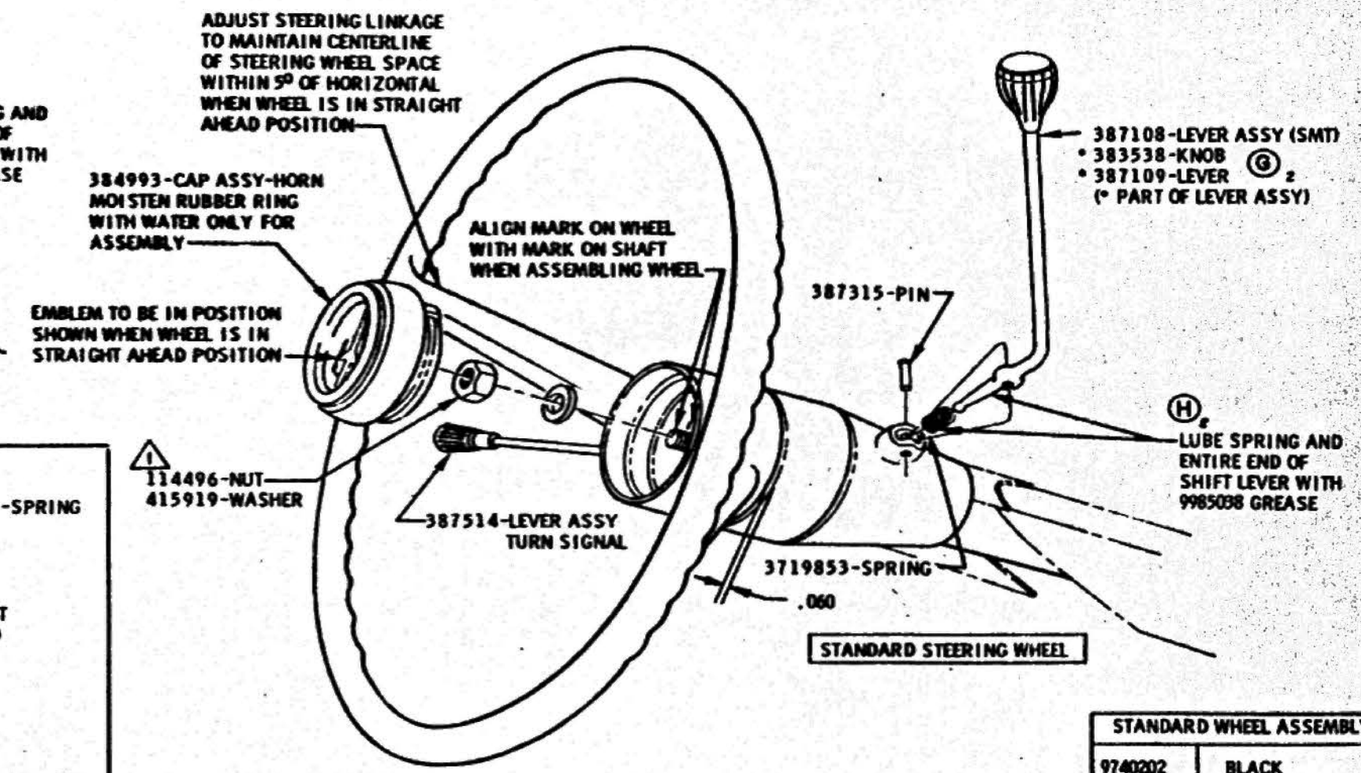

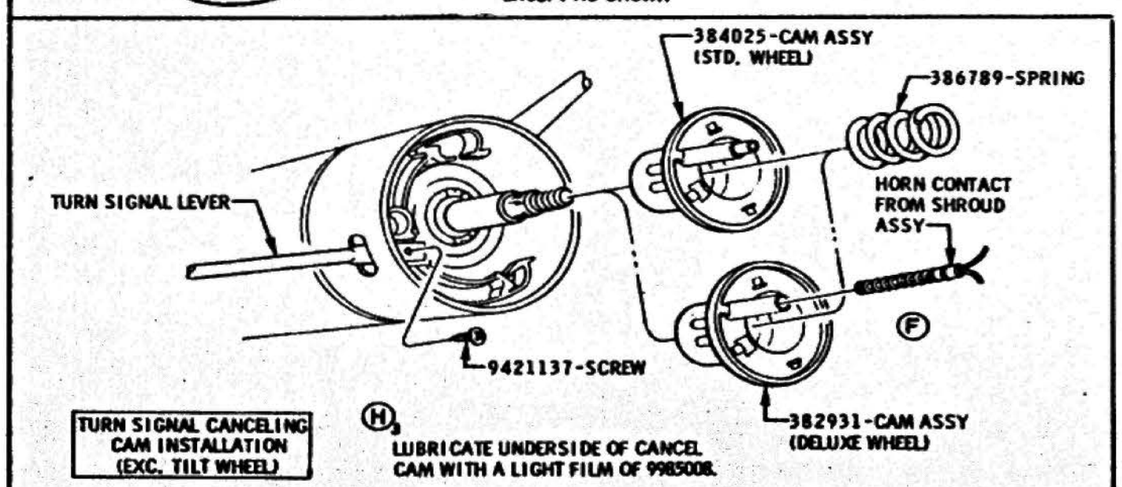

TURN SIGNAL CANCELING CAM INSTALLATION (EXC. TILT WHEEL)

30-40 LBS FT

STANDARD WHEEL ASSEMBLY	
9740202	BLACK
9742161	MED. SLATE
9742162	MED. GREEN
9742163	MED. BLUE
9742164	MED. FAWN
9742165	MED. RED
9742166	MED. TURQUOISE

DATE	SYM	REVISION	DR.	CK.	DATE	SYM	REVISION	DR.	CK.	DATE	SYM	REVISION	DR.	CK.
										10-17-64	E	390448 WAS 5672939		
										6-24-64	D	TORQUE SPEC ADDED	KA	
					11-20-64	N_3	LUBE NOTE ADDED	JC		6-16-64	C	5672939 ADDED	WM	
					10-21-64	C_2	PART NO'S ADDED			6-16-64	B	CHART ADDED	WM	
					10-12-64	F	390446-SPRING REMOVED			6-16-64	A_2	VIEW ADDED	WM	

INSTALLATION STEERING WHEEL

DATE JANUARY 30, 1964 — DR. BY R. ACHTERHOF — CHECKED — APPR. — APPR.

FIRST USED 1965 — Oldsmobile Service ILLUSTRATION — SERIES F 85 — REF. — PAGE 9-4.1 — PART NO. 387444

(E) △1 35-45 LBS FT
(B) △2 30-50 LBS FT
△3 120-150 LBS FT

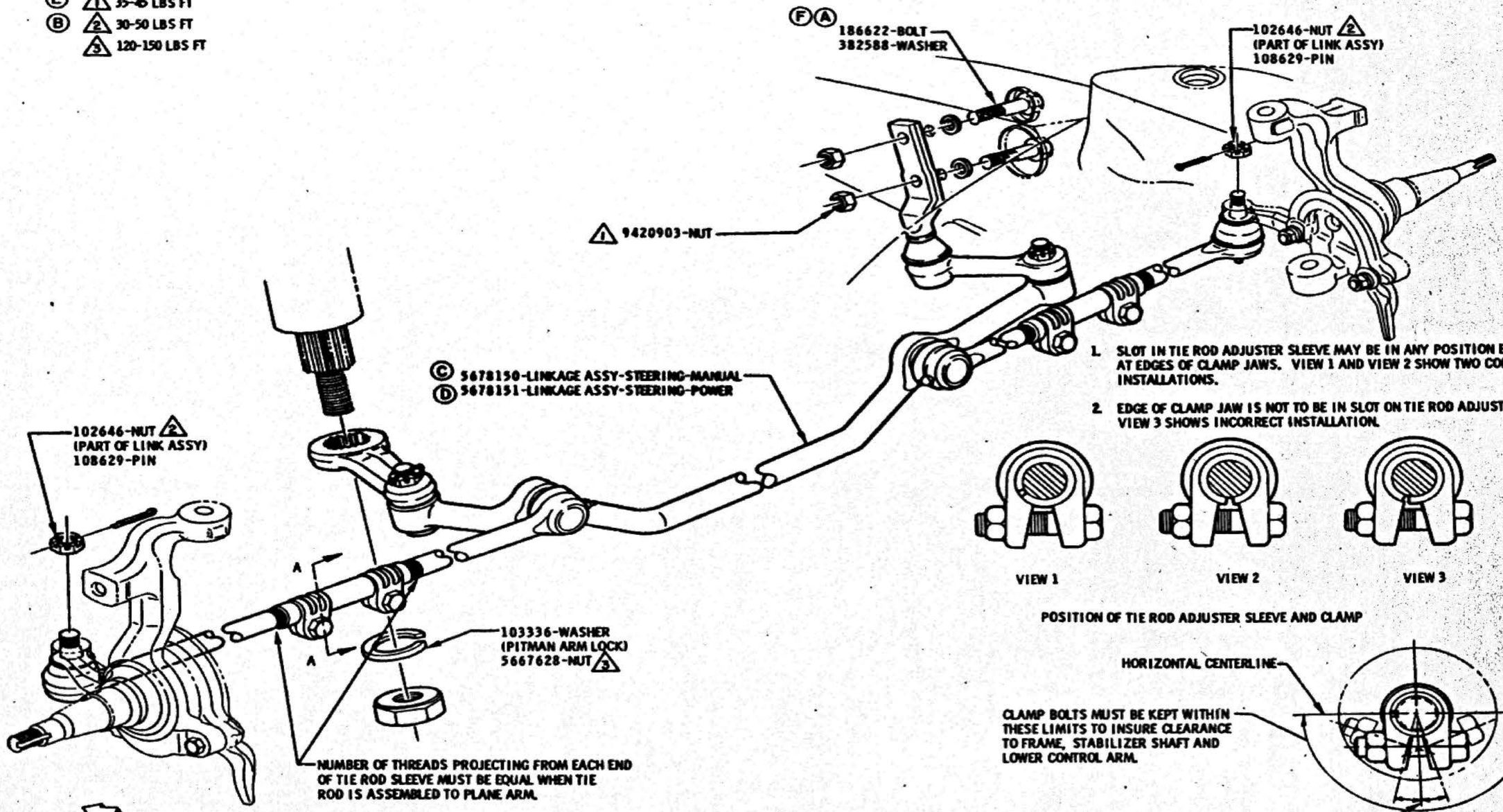

1. SLOT IN TIE ROD ADJUSTER SLEEVE MAY BE IN ANY POSITION EXCEPT AT EDGES OF CLAMP JAWS. VIEW 1 AND VIEW 2 SHOW TWO CORRECT INSTALLATIONS.
2. EDGE OF CLAMP JAW IS NOT TO BE IN SLOT ON TIE ROD ADJUSTER SLEEVE. VIEW 3 SHOWS INCORRECT INSTALLATION.

POSITION OF TIE ROD ADJUSTER SLEEVE AND CLAMP

DATE	SYM	REVISION	DR.	CK.	DATE	SYM	REVISION	DR.	CK.	DATE	SYM	REVISION	DR.	CK.
										1-10-65	E	WAS 25-35 LBS. FT	RS	LA
										8-27-64	D	5678151 WAS 5693753	RS	DT
										8-27-64	C	5678150 WAS 5693752	RS	DT
										6-24-64	B	TORQUE SPEC ADDED	RS	RAPB
					1-10-65	F	WAS 179841-BOLT	RS	LA	2-10-64	A	178840 BOLT REMOVED	RS	RB

INSTALLATION — STEERING LINKAGE

DATE JANUARY 6, 1964 — DR. BY R. ACHTERHOF — CHECKED — APPR. — APPR.

FIRST USED 1965 — Oldsmobile Classic ILLUSTRATION — PAGE 9-5.1

SERIES F-85 — REF. — PART NO. 387293

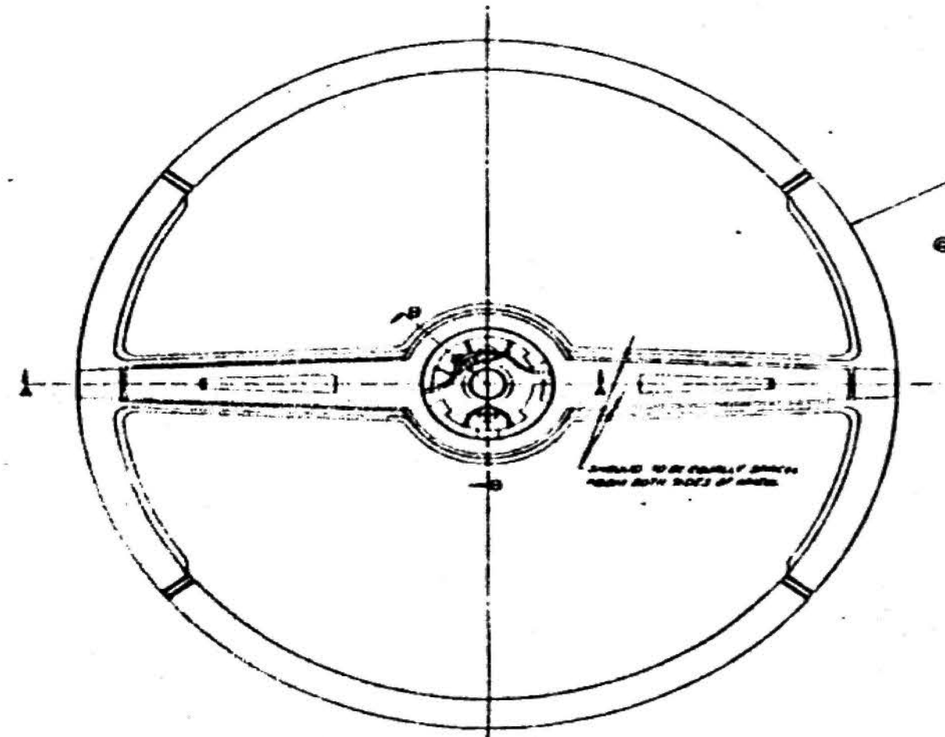

9741430	WHEEL ASSY - BLACK	
9742173	WHEEL ASSY - MED SLATE	
9742174	WHEEL ASSY - MED GREEN	
9742175	WHEEL ASSY - MIDNIGHT GREEN	
9742176	WHEEL ASSY - MED BLUE	
9742177	WHEEL ASSY - MED PATINA	
9743224	WHEEL ASSY - RED	
9742179	WHEEL ASSY - MED RED	
9742180	WHEEL ASSY - MED TURQUOISE	

AS PURCHASED (FOR MOLDING ASSY BASIC DIMENSIONS SEE 9741210)

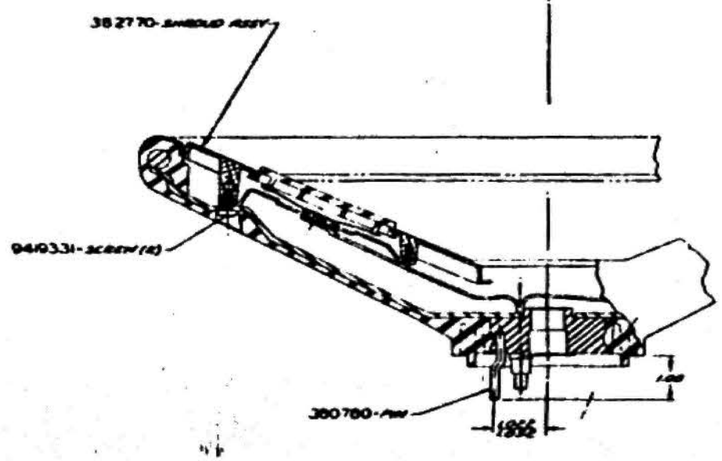

Section A-A

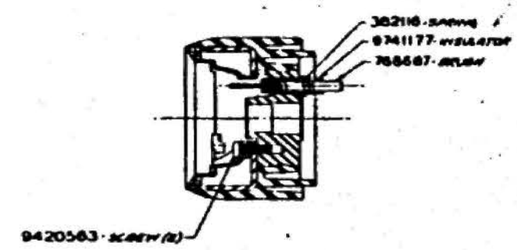

Section B-B

STEERING WHEEL ASSEMBLIES COMPLETE	
384141	BLACK
386850	MED SLATE
386851	MED GREEN
386852	MIDNIGHT GREEN
386853	MED BLUE
386854	MED PATINA
386485	RED
386856	MED RED
386857	MED TURQUOISE

DO NOT SCALE

CHART-STEERING WHEEL

386849

OLDSMOBILE DIVISION

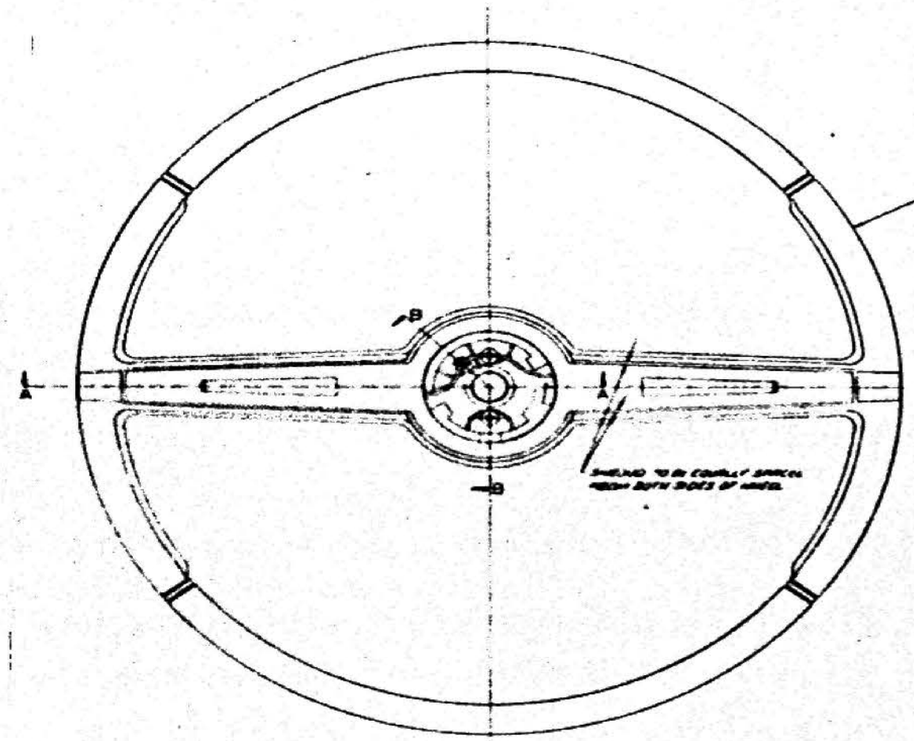

9741430	- WHEEL ASSY- BLACK	AS PURCHASED (FOR MOLDING ASSY BASIC DIMENSIONS SEE 9741210)
9742173	- WHEEL ASSY- MED SLATE	
9742174	- WHEEL ASSY- MED GREEN	
9742175	- WHEEL ASSY- MIDNIGHT GREEN	
9742176	- WHEEL ASSY- MED BLUE	
9742177	- WHEEL ASSY- MED FAWN	
9743224	- WHEEL ASSY - RED	
9742179	- WHEEL ASSY- MED RED	
9742180	- WHEEL ASSY- MED TURQUOISE	

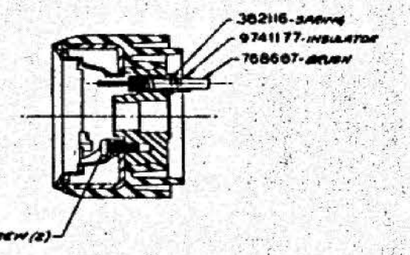

SECTION B-B

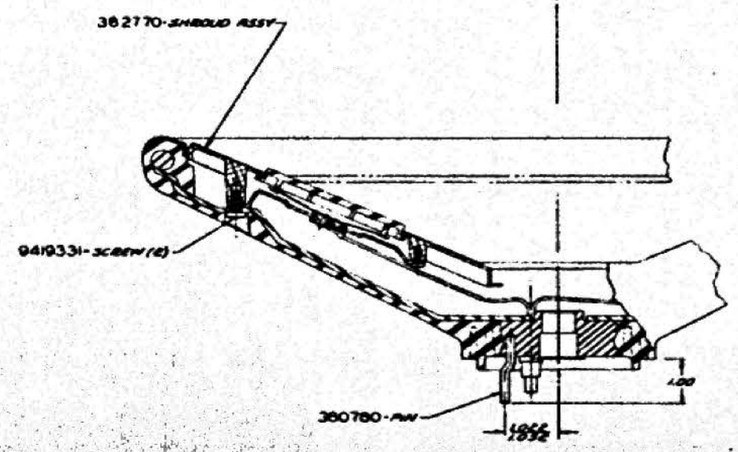

SECTION A-A

STEERING WHEEL ASSEMBLIES COMPLETE	
384141	BLACK
386850	MED SLATE
386851	MED GREEN
386852	MIDNIGHT GREEN
386853	MED BLUE
386854	MED FAWN
386485	RED
386856	MED RED
386857	MED TURQUOISE

DO NOT SCALE

CHART-STEERING WHEEL

OLDSMOBILE DIVISION
GENERAL MOTORS CORPORATION
LANSING, MICHIGAN

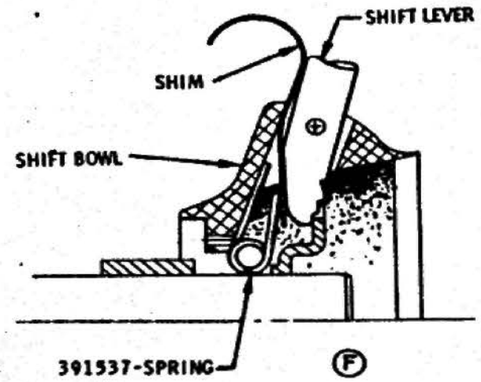

SHIFT LEVER SPRING INSTALLATION

1. ROTATE BOWL TO NORMAL DRIVE RANGE TO PROVIDE MAXIMUM CLEARANCE BETWEEN LEVER AND LOCK PLATE.
2. INSERT SPRING WITH COILS INNERMOST AND WITH OPEN LEGS AGAINST BACK SURFACE OF BOWL.
3. INSERT SHIM (APPROX. .040 THICK X .38 WIDE SPRING STOCK) OVER CENTRAL LEG OF SPRING.
4. INSERT LEVER OVER TOP OF SHIM, THEREBY COMPRESSING SPRING.
5. ASSEMBLE GEARSHIFT LEVER PIVOT PIN.
6. REMOVE SHIM.

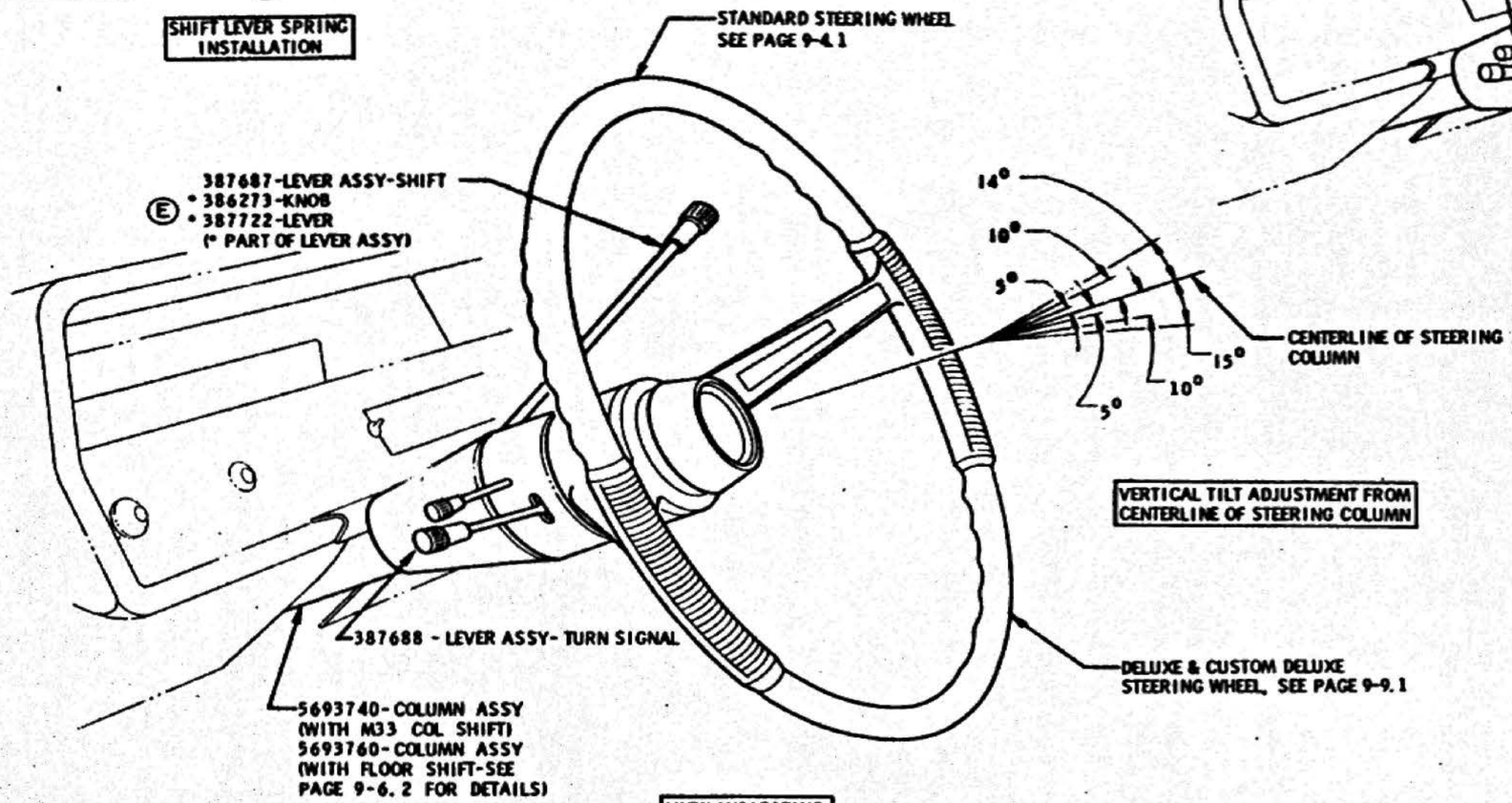

VERTICAL TILT ADJUSTMENT FROM CENTERLINE OF STEERING COLUMN

VIEW INDICATING NORMAL POSITION

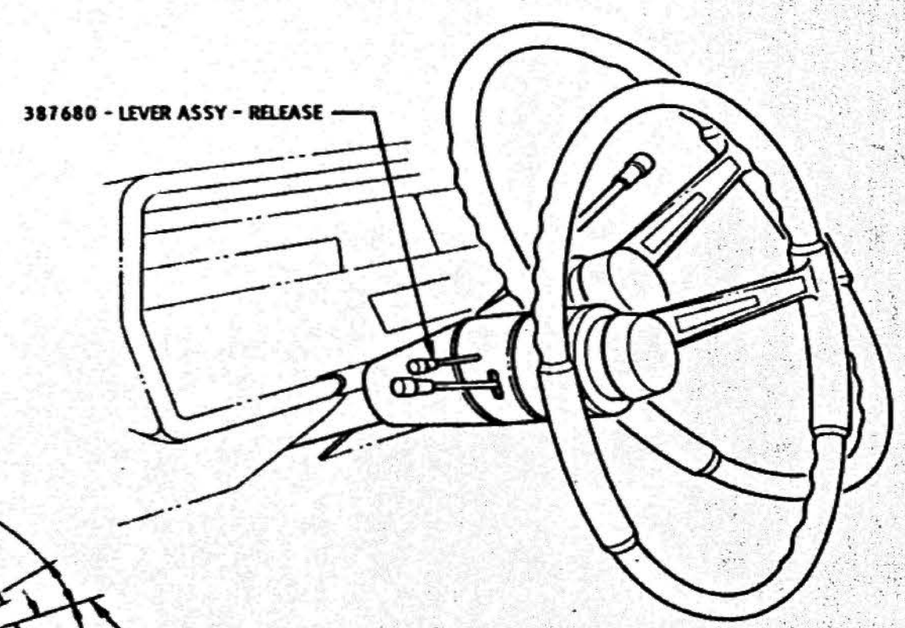

VIEW INDICATING EXTREME UPPER AND LOWER TILTED POSITIONS

Ⓓ

DATE	SYM	REVISION	DR.	CK.	DATE	SYM	REVISION	DR.	CK.	DATE	SYM	REVISION	DR.	CK.
										10-26-64	E	PART NUMBERS ADDED		
										6-17-64	D	TITLE REVISED		
										6-17-64	C	NOTE REVISED		
										6-17-64	B	VIEW REMOVED		
					1-11-65	F	VIEW ADDED			6-9-64	A	PART NO.'S REVISED		

INSTALLATION — STEERING COLUMN (TILT)

DATE JANUARY 22, 1964 — FIRST USED 1965 — Oldsmobile Service Illustration

DR. BY D. GUNTHER — CHECKED — APPR. — APPR.

SERIES F85- — REF. 35N55 — PAGE 9-6.1 — PART NO. 387285

△1 25-35 FT. LBS.

△2 36-60 LBS. IN. Ⓒ

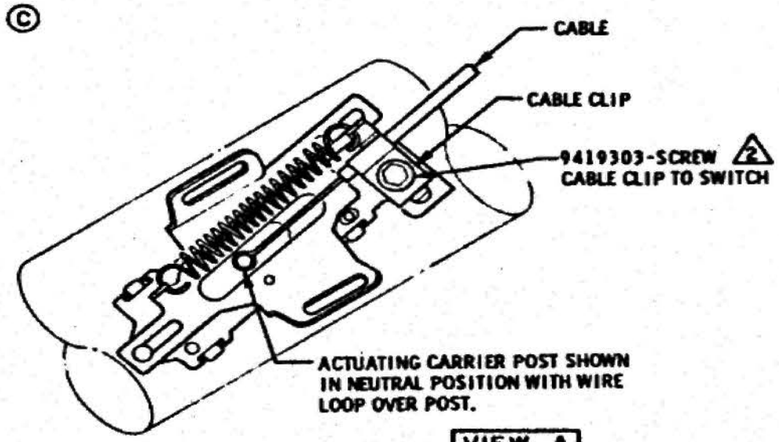

VIEW A

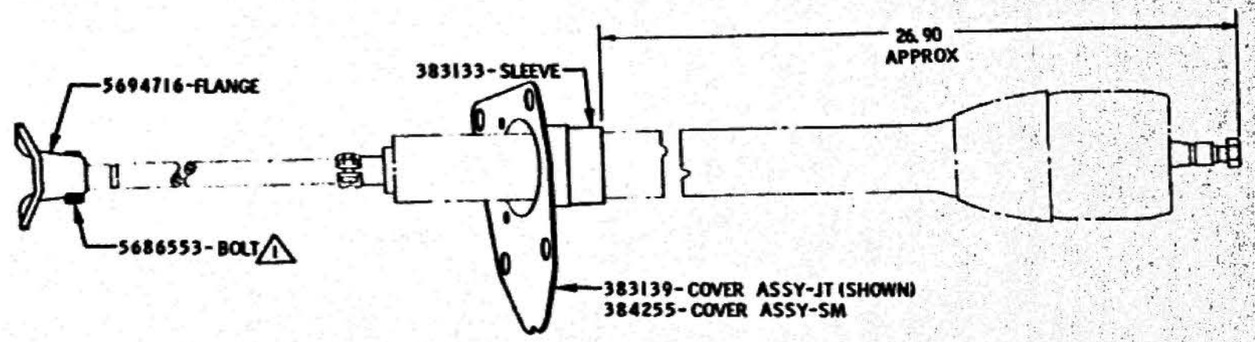

Ⓐ STEERING COLUMN SUB-ASSEMBLY

FLOOR SHIFT MODELS

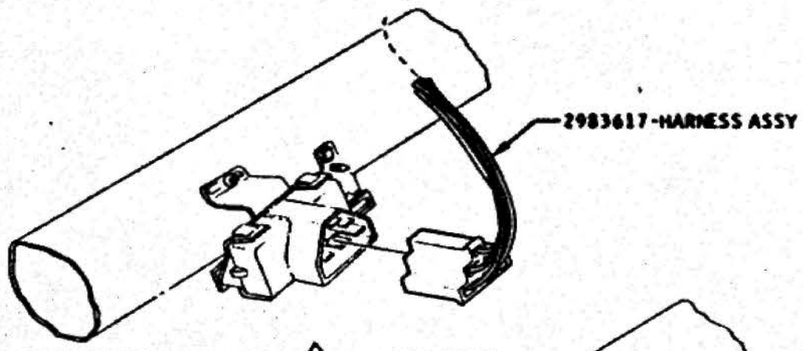

VIEW B

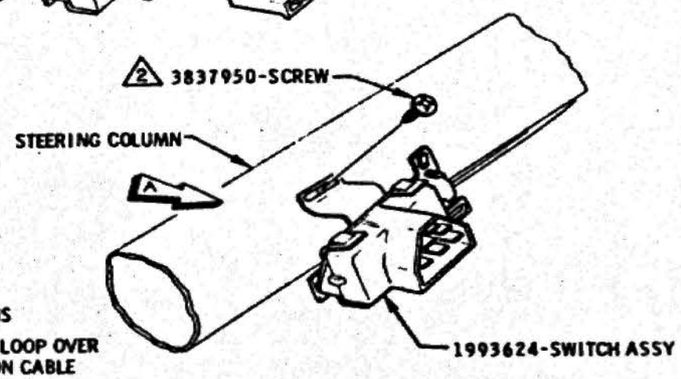

SWITCH FASTENING

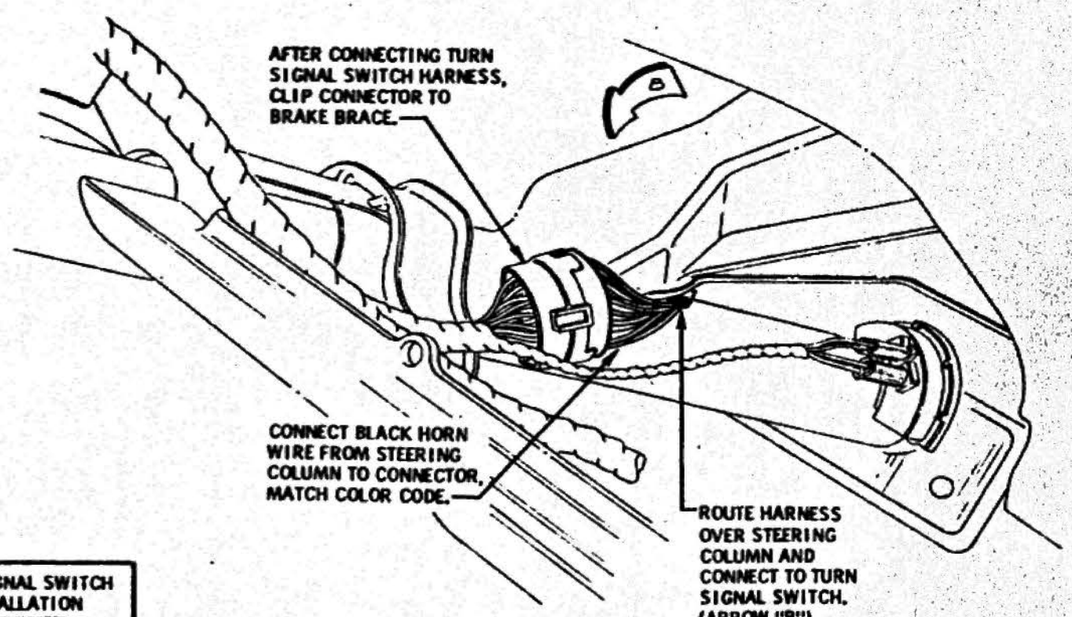

HARNESS INSTALLATION

Ⓑ

INSTALLATION INSTRUCTIONS

ASSEMBLE ACTUATING WIRE LOOP OVER CARRIER POST AND POSITION CABLE CLAMP, THEN TIGHTEN SCREW.

POSITION STEERING WHEEL TO FULL BELOW CENTER POSITION AND FASTEN SWITCH TO STEERING COLUMN.

TURN SIGNAL SWITCH INSTALLATION TILT WHEEL

DATE	SYM	REVISION	DR.	CK.	DATE	SYM	REVISION	DR.	CK.	DATE	SYM	REVISION	DR.	CK.
										11-24-64	C	TORQUE SPEC ADDED	JG	
										6-16-64	B	TITLE REVISED	JA	
										6-9-64	A	VIEW ADDED	WR	DJ

INSTALLATION	STEERING COLUMN (TILT)		
DATE JANUARY 22, 1964	FIRST USED 1965	Oldsmobile GRAPHIC ILLUSTRATION	PAGE 9-6.2
DR. BY D. GUNTHER			
CHECKED	SERIES F-85	REF. 55N53	PART NO. 387285
APPR.			
APPR.			

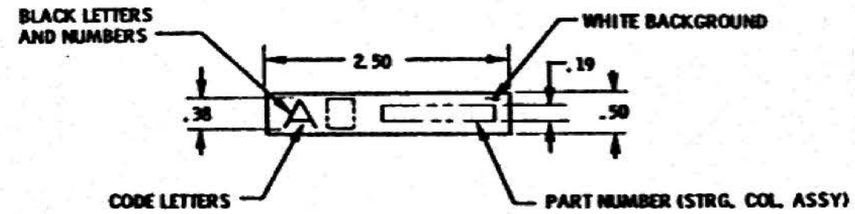

TYPICAL TAPE

	PT. NO.	CODE	TRANS.	USAGE	YEAR
G	388798	AP	SMT	OLDSMOBILE V6 (F-85) BUICK V6 & V8	1965
	387111	AB	SMT	OLDSMOBILE V8 (F-85)	1965
	387112	AD	SMT	PONTIAC L6	1965
	387113	AI	SMT	PONTIAC V8	1965
	385980	AE	AT	OLDSMOBILE V6 & V8 (F-85)	1965
	387120	AF	AT	BUICK V6 & V8	1965
K, E	387121	AL	AT	PONTIAC L6 & V8	1965
L					
H	388799	AQ	SMT	OLDSMOBILE V6 & V8 (F-85) BUICK V6 & V8	1965
K,	387523	AJ	SMT	PONTIAC L6 & V8	1965
M					
J	387522	AG	AT	OLDSMOBILE V6 & V8 (F-85) BUICK V6 & V8	1965
F	391104	AR	AT	BUICK V8	1965
K,	387525	AM	AT	PONTIAC L6 & V8	1965
N					
	386538	AT	SMT	OLDSMOBILE B/C	1965
	387318	AV	AT	OLDSMOBILE B/C	1965
	387702	AW	SMT & AT	OLDSMOBILE B/C	1965
	388190	AX	SMT	OLDSMOBILE B/C WITH CORNERING LIGHTS (T87)	1965
	388191	AY	AT	OLDSMOBILE B/C WITH CORNERING LIGHTS (T87)	1965
	388192	AZ	SMT & AT	OLDSMOBILE B/C WITH CORNERING LIGHTS (T87)	1965

PT. NO.	CODE	TRANS.	USAGE	YEAR
5693840	SD	AT	OLDSMOBILE B/C TILT WHEEL	1965
5693850	SU	SMT & AT	OLDSMOBILE B/C TILT WHEEL	1965
5693740	SR	AT	OLDSMOBILE V6 & V8 (F-85) TILT WHEEL	1965
5693760	SS	SMT & AT	OLDSMOBILE V6 & V8 (F-85) TILT WHEEL	1965

DATE	SYM	REVISION	DR.	CK.	DATE	SYM	REVISION	DR.	CK.	DATE	SYM	REVISION	DR.	CK.
					2-1-65	M	387524 REMOVED			12-13-64	G	WAS 387110		
					2-1-65	L	387122 REMOVED			11-10-64	F	391104 RELOCATED		
					2-1-65	K	USAGE REVISED			11-9-64	E	LINE ADDED		
					12-13-64	J	LINE REVISED			7-14-64	D	PART NUMBERS ADDED		
2-1-65	N	387526 REMOVED			12-13-64	H	WAS 387521			7-14-64	C	FORMAT REVISED		

CHART - TAPE IDENTIFICATION (STEERING COLUMN)

DATE FEB. 26, 1964
DR. BY G. ARNTSON
CHECKED H. J. BUEHLER
APPR. T. R. FERNAND
APPR. H. M. OLDS

FIRST USED 1965
Oldsmobile DRAFTING ILLUSTRATION
SERIES ALL
REF.
PAGE 9-7.1*
PART NO. 388188

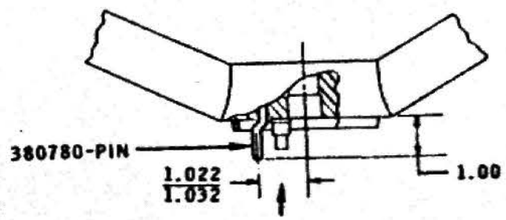

INSTALLATION - TURN SIGNAL CANCELLING PIN (TILT WHEEL ONLY)

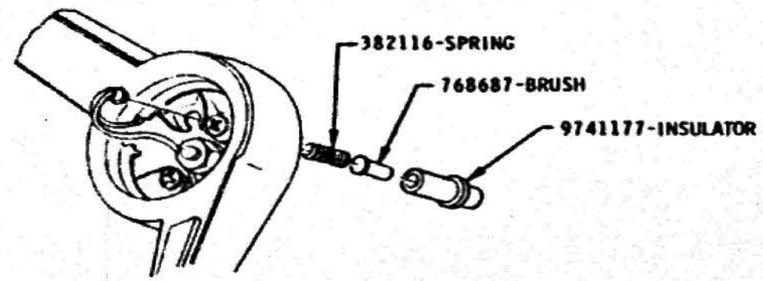

INSTALLATION HORN CONTACT (TILT WHEEL ONLY)

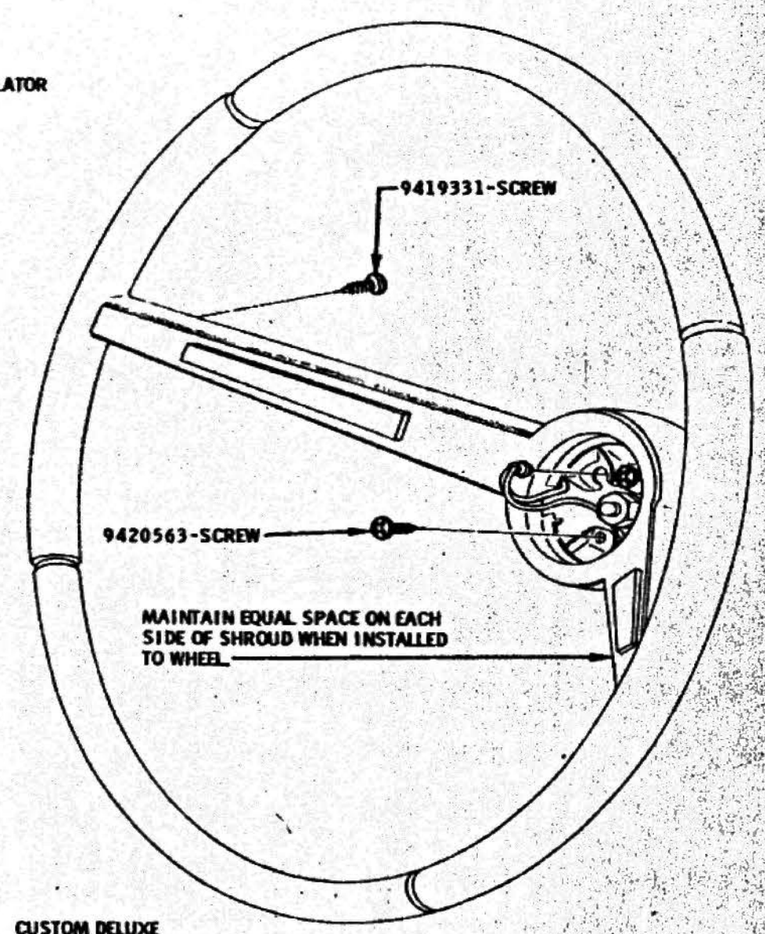

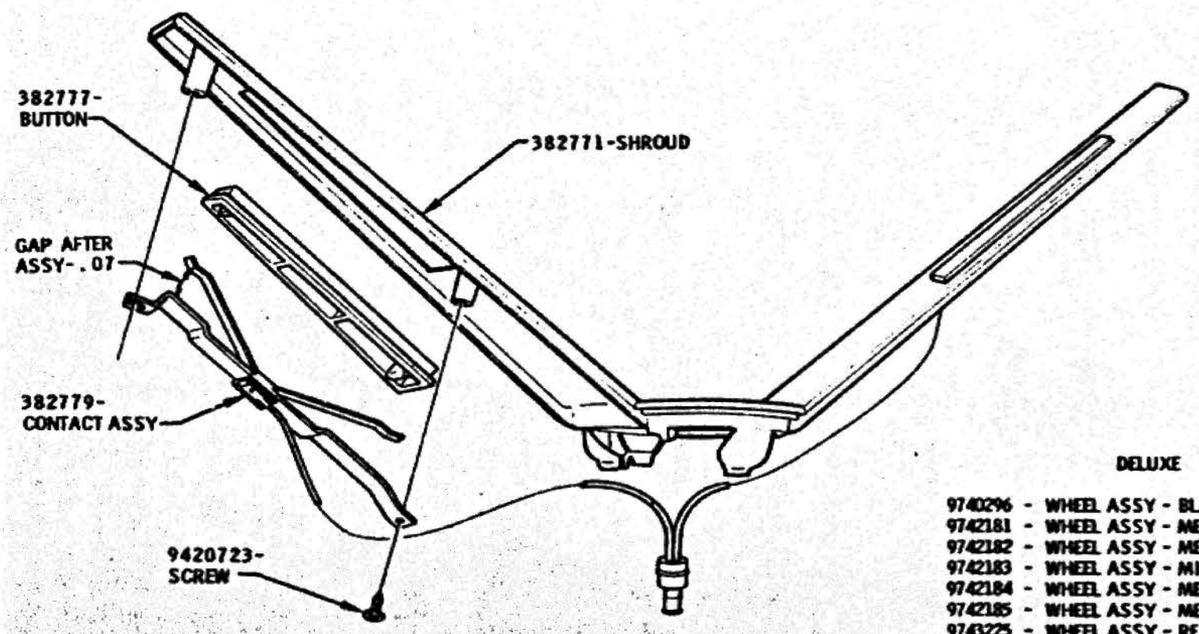

DELUXE

9740296 - WHEEL ASSY - BLACK
9742181 - WHEEL ASSY - MED SLATE
9742182 - WHEEL ASSY - MED GREEN
9742183 - WHEEL ASSY - MIDNIGHT GREEN
9742184 - WHEEL ASSY - MED BLUE
9742185 - WHEEL ASSY - MED FAWN
9743225 - WHEEL ASSY - RED
9742187 - WHEEL ASSY - MED RED
9742188 - WHEEL ASSY - MED TURQUOISE

CUSTOM DELUXE

9741430 - WHEEL ASSY - BLACK
9742173 - WHEEL ASSY - MED SLATE
9742174 - WHEEL ASSY - MED GREEN
9742175 - WHEEL ASSY - MIDNIGHT GREEN
9742176 - WHEEL ASSY - MED BLUE
9742177 - WHEEL ASSY - MED FAWN
9743224 - WHEEL ASSY - RED
9742179 - WHEEL ASSY - MED RED
9742180 - WHEEL ASSY - MED TURQUOISE

DATE	SYM	REVISION	DR.	CK.
6-1-64	D	ORTHOGRAPHIC DRAWING "U/A" FORMAT REVISED WAS		
	E			

INSTALLATION **STEERING WHEEL-DELUXE**

DATE NOV. 18, 1965
DR. BY HAGENBUCH
CHECKED BUEHLER
APPR. FERNAND
APPR. OLDS

FIRST USED 1965 — Oldsmobile Service ILLUSTRATION

SERIES F85 — REF. — PAGE 9-9.1 — PART NO. 386840

POWER STEERING INSTALLATION AND FILL PROCEDURE

1. POWER STEERING GEAR TO BE INSTALLED ON FRAME WITH PLASTIC PLUGS IN PLACE.

2. DO NOT REMOVE PLASTIC PLUGS FROM STEERING GEAR UNTIL:
   - A. AFTER PITMAN ARM IS INSTALLED ON GEAR SPLINE.
   - B. A MINIMUM OF 15 SECONDS HAVE ELAPSED AFTER COMPLETING PITMAN ARM INSTALLATION.
   - C. IMMEDIATELY BEFORE INSTALLING THE HOSE ASSEMBLIES TO THE GEAR.

3. DO NOT CRANK THE GEAR UNTIL AFTER FILL OPERATION.

4. TIGHTEN HOSE ASSEMBLY FITTINGS ON GEAR AND POWER STEERING PUMP WITH 20-35 FT. LBS. TORQUE.

5. FILL POWER STEERING SYSTEM WITH A RECIRCULATING FILL SYSTEM USING POWER STEERING FLUID (9980010).
   FILL SYSTEM VACUUM IS NOT TO EXCEED 29" HG AND PRESSURE IS NOT TO EXCEED 35PSI AT POWER STEERING PUMP.

6. PUMP MUST BE FULL AND FILL SYSTEM RECIRCULATING WHEN THE PUMP IS INITIALLY ROTATED. OPERATE PUMP A MINIMUM OF 10 SECONDS BEFORE FILL SYSTEM IS REMOVED.
   A SPEED OF 900 TO 1000 RPM IS GENERALLY REQUIRED TO INSURE PUMP PRIME.

7. CHECK FLUID LEVEL AND ADD AS REQUIRED PRIOR TO TEST ROLLS (TO BE AT BOTTOM OF FILLER NECK WHEN COLD).

8. DO NOT CRANK STEERING WHEEL UNTIL FILL OPERATION IS COMPLETED AND LEVEL CHECKED.

9. CHECK HOSES AND FITTINGS FOR LEAKS.

10. INSPECT FLUID LEVEL AFTER ROLLS WHILE OIL IS HOT. ADJUST FLUID LEVEL, AS REQUIRED, TO WITHIN ± 1/2 INCH OF THE FLUID LEVEL MARK ON THE PUMP RESERVOIR FILLER NECK.

DATE	SYM	REVISION	DR.	CK.	DATE	SYM	REVISION	DR.	CK.	DATE	SYM	REVISION	DR.	CK.
										10-12-64	G	CHART REVISED	DS	JA
										10-12-64	F	FORMAT REVISED	DS	JA

CHART – POWER STEERING INSTALLATION & FILL PROCEDURE

DATE JUNE 8, 1962
DR. BY PHYLLIS BENGEL
CHECKED M. BEDFORD
APPR. T. R. FERNAND
APPR.

FIRST USED 1963

Oldsmobile GRAPHIC ILLUSTRATION

DESIGN ALL

REF.

PAGE 9-10.1*

PART NO. 380103

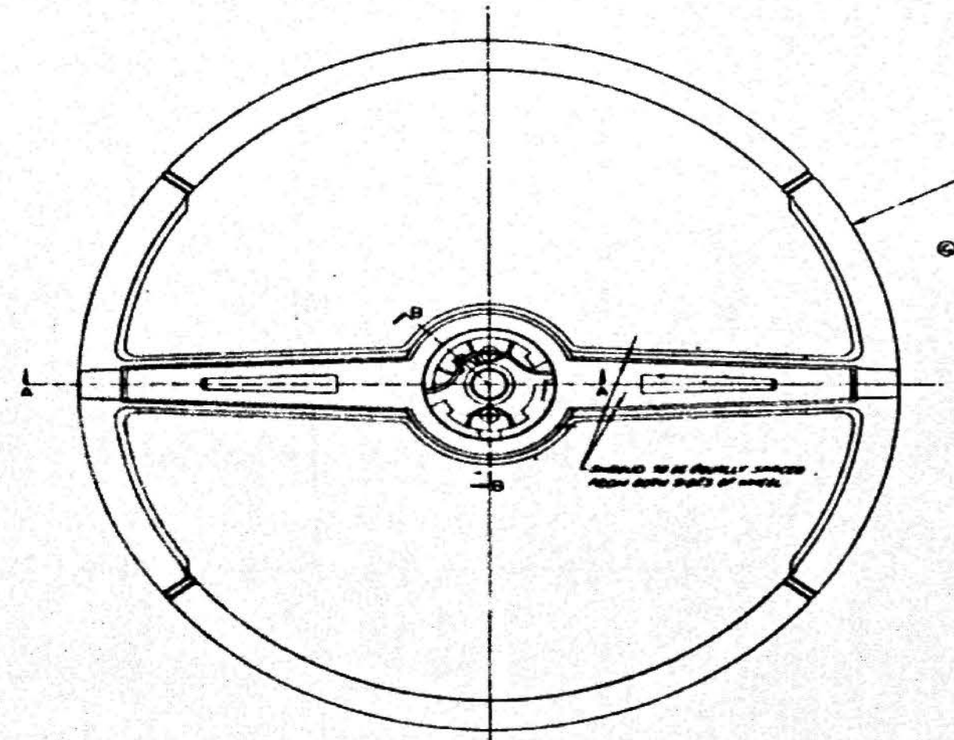

9741430	- WHEEL ASSY- BLACK	
9742173	- WHEEL ASSY-MED SLATE	
9742174	- WHEEL ASSY-MED GREEN	
9742175	- WHEEL ASSY-MIDNIGHT GREEN	
9742176	- WHEEL ASSY-MED BLUE	
9742177	- WHEEL ASSY-MED FAWN	
9743224	- WHEEL ASSY-RED	
9742179	- WHEEL ASSY-MED RED	
9742180	- WHEEL ASSY-MED TURQUOISE	

AS PURCHASED (FOR MOLDING ASSY BASIC DIMENSIONS SEE-9741210)

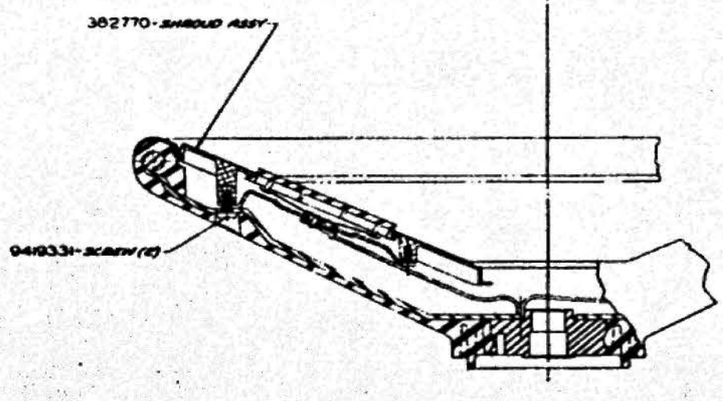

SECTION A-A

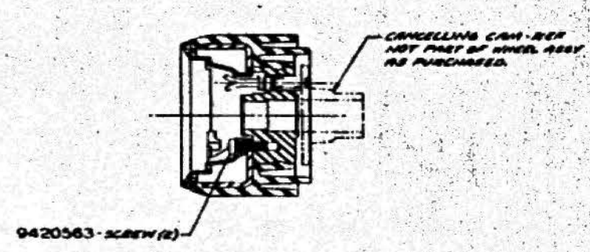

SECTION B-B

STEERING WHEEL ASSEMBLIES COMPLETE	
384131	BLACK
386867	MED SLATE
386868	MED GREEN
386869	MIDNIGHT GREEN
386870	MED BLUE
386871	MED FAWN
386486	RED
386873	MED RED
386874	MED TURQUOISE

DO NOT SCALE

CHART-STEERING WHEEL

386868

OLDSMOBILE DIVISION

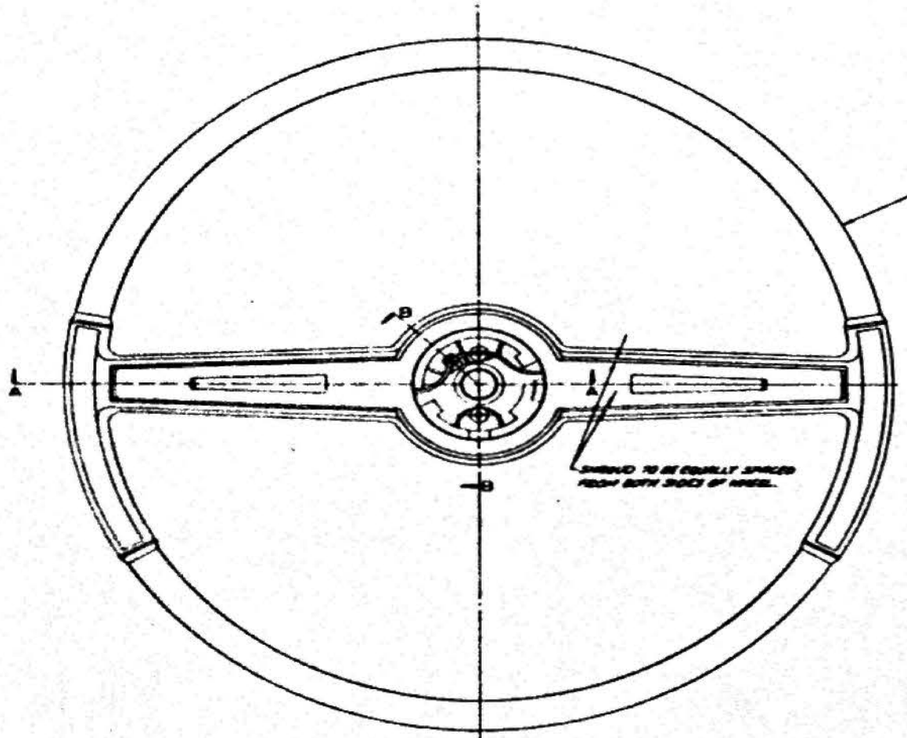

9740298 -	WHEEL ASSY - BLACK	
9742181 -	WHEEL ASSY - MED SLATE	
9742182 -	WHEEL ASSY - MED GREEN	
9742183 -	WHEEL ASSY - MIDNIGHT GREEN	
9742184 -	WHEEL ASSY - MED BLUE	
9742185 -	WHEEL ASSY - MED FAWN	
9743225	WHEEL ASSY - RED	
9742187 -	WHEEL ASSY - MED RED	
9742188 -	WHEEL ASSY - MED TURQUOISE	

AS PURCHASED (FOR MOLDING ASSY BASIC DIMENSIONS SEE 9740288).

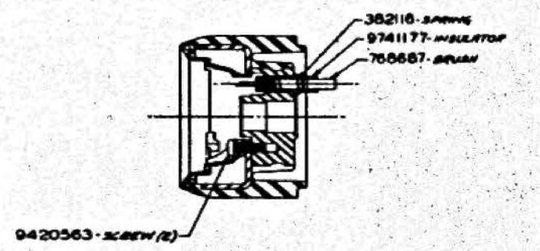

SECTION B-B

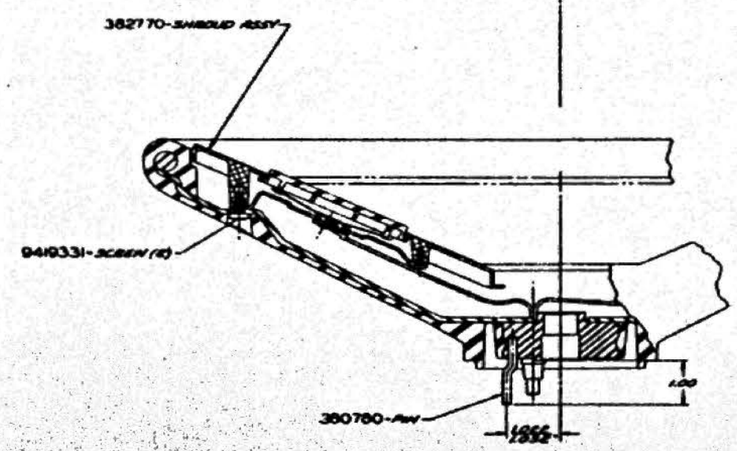

SECTION A-A

STEERING WHEEL ASSEMBLIES COMPLETE	
383480	BLACK
386876	MED SLATE
386877	MED GREEN
386878	MIDNIGHT GREEN
386879	MED BLUE
386880	MED FAWN
386487	RED
386882	MED RED
386883	MED TURQUOISE

DO NOT SCALE

CHART-STEERING WHEEL

386875

WHEELS & TIRES

DRAWING NO.	DRAWING NAME	PAGE NO.
387458	JACK & SPARE WHEEL	10 - 2.1
386139	BRAKE & WHEEL	10 - 3.1
388599	TIRE USAGE CHART	10 - 4.1
386040	WHEEL DISC ASSEMBLY	10 - 5.1
		10 - 6.1
390294	SPARE WHEEL LOCK	10 - 7.1

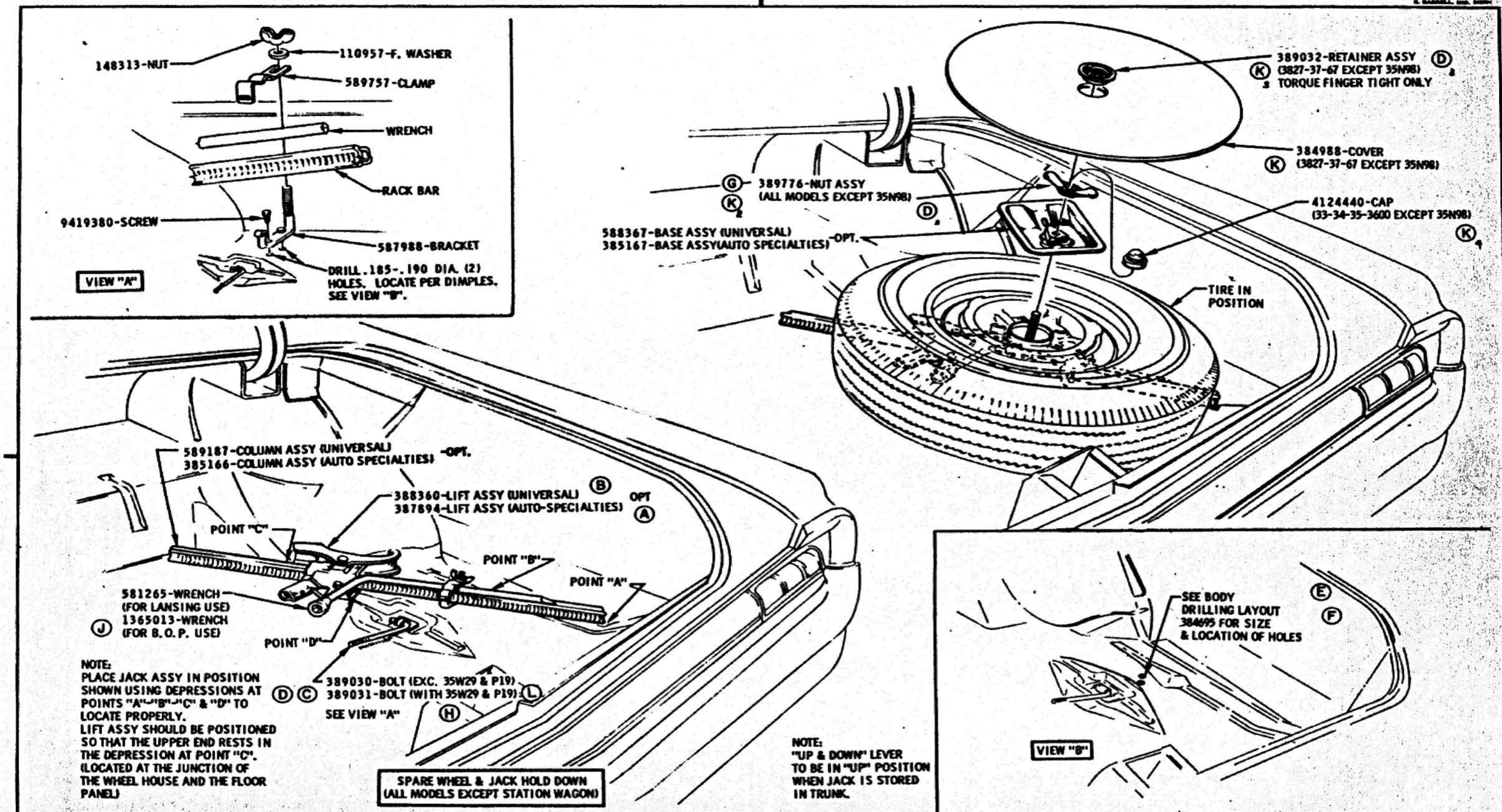

DATE	SYM	REVISION	DR.	CK.	DATE	SYM	REVISION	DR.	CK.	DATE	SYM	REVISION	DR.	CK.
					1-22-65	K4	EXCEPT 35N98 ADDED	BA	VP	5-14-64	E	TEMPLATE NO. ADDED		VP
					8-27-64	J	WRENCH NO. ADDED		VP	5-14-64	D	PART NUMBERS REV		VP
					8-27-64	H	WAS 35 800 EQUIP.		VD	4-22-64	C	388758 BOLT ADDED		VP
					9-14-64	G	WAS 389037-NUT.	BA	DT	5-24-64	B	388360 NO. ADDED		VP
2-5-65	L	USAGE NOTES ADDED		VP	5-28-64	F	NOTE REVISED	BA	VP	2-21-64	A	387894 NO. ADDED		VP

INSTALLATION **JACK & SPARE WHEEL**

DATE JAN. 15, 1964
DR. BY B. PARKER
CHECKED H. VAN PELT
APPR.
APPR.

FIRST USED 1965
SERIES F85
Oldsmobile GRAPHIC ILLUSTRATION
REF. 10E 14E
PAGE 10-2.1
PART NO. 387458

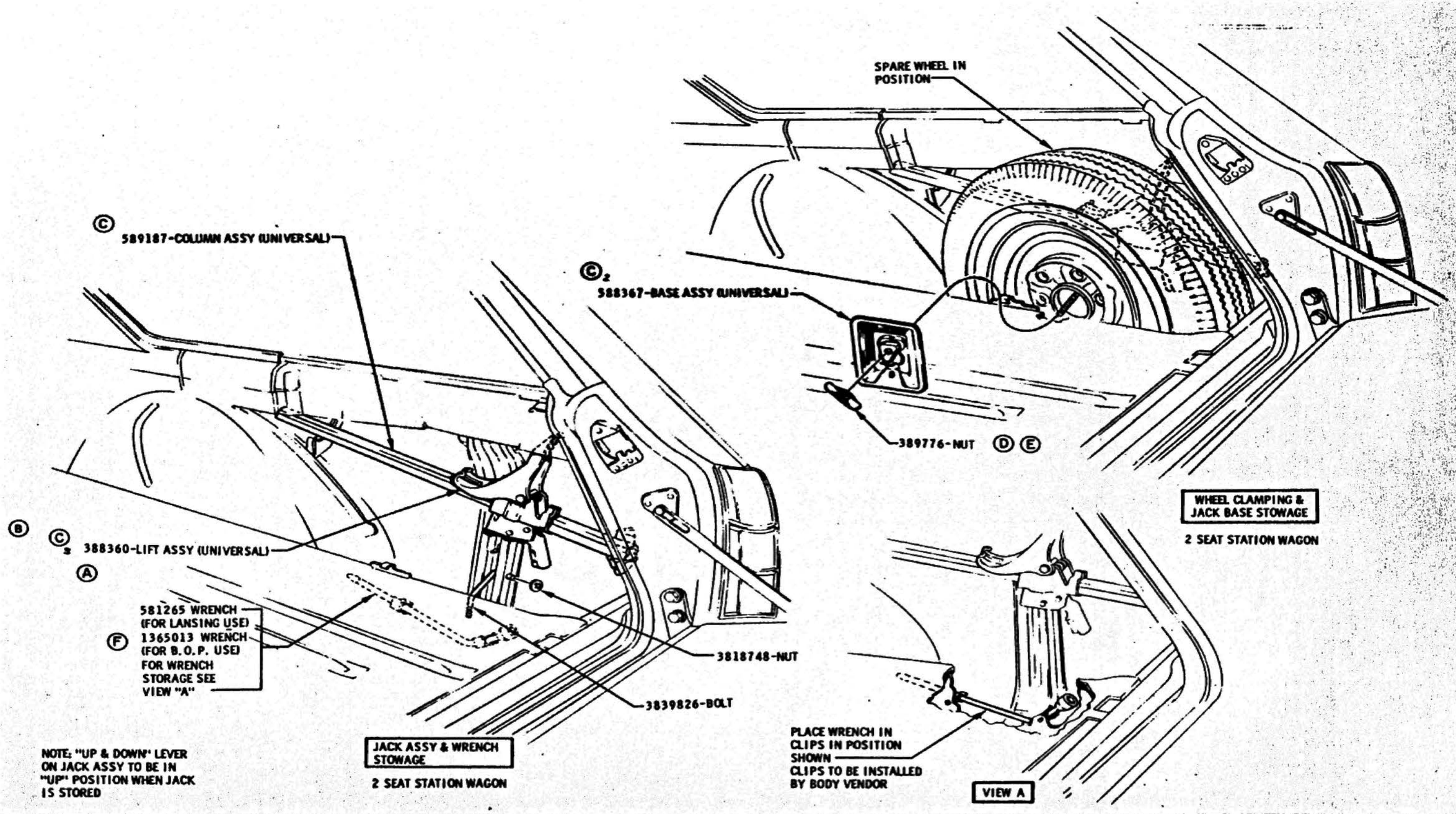

DATE	SYM	REVISION	DR.	CK.	DATE	SYM	REVISION	DR.	CK.	DATE	SYM	REVISION	DR.	CK.
										7-9-64	E	WAS 389037-NUT	WM	VP
										5-14-64	D	WAS 533470 NUT	RB	VP
										5-14-64	C₁	AUTO SPEC. NOS. REMOVED	B	VP
										4-11-64	B	PART NO. ADDED	WM	VP
					8-27-63	F	WRENCH NUMBER ADDED	RB	VP	2-21-64	A	387439 NO. ADDED	CB	VP

INSTALLATION — **JACK & SPARE WHEEL**

DATE JAN. 15, 1964 — DR. BY B. PARKER — CHECKED H. VAN PELT — APPR. — APPR.

FIRST USED 1965 — Oldsmobile GRAPHIC ILLUSTRATION — SERIES F85 — REF. 10C 14E — PAGE 10-2.2 — PART NO. 387458

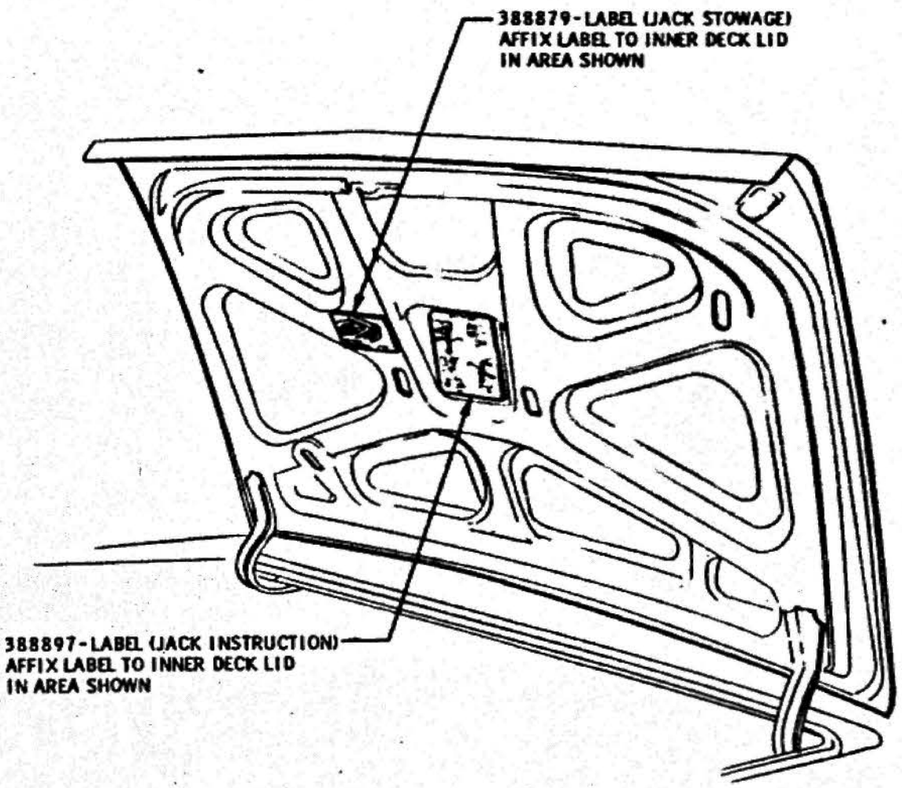

LOCATION OF JACK STOWAGE & INSTRUCTION LABELS

FOR ALL MODELS EXCEPT STATION WAGONS

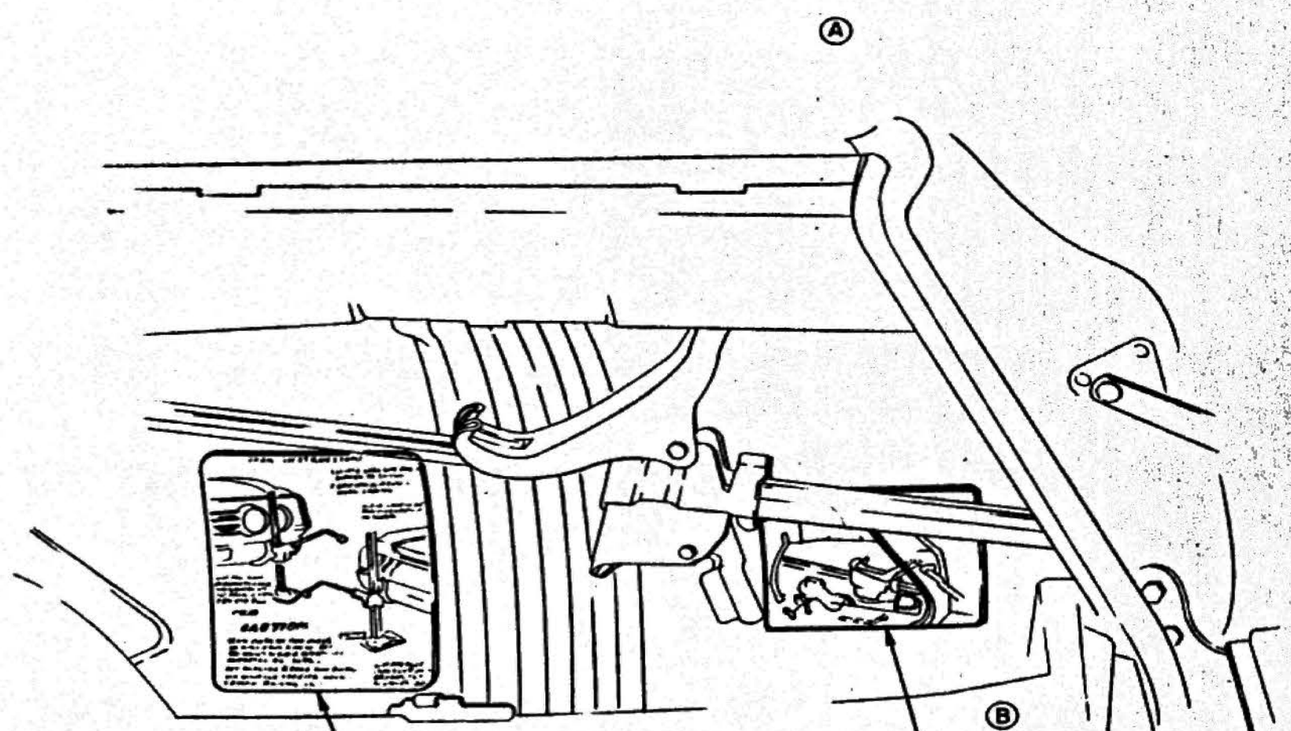

LOCATION OF JACK STOWAGE & INSTRUCTION LABELS

TWO SEAT STATION WAGONS

DATE	SYM	REVISION	DR.	CK.	DATE	SYM	REVISION	DR.	CK.	DATE	SYM	REVISION	DR.	CK.
										5-4-64	B	JACK STOWAGE LABEL ADDED	BP	VP
										3-24-64	A	JACK CAUTION LABEL REVD	BP	VP

INSTALLATION: JACK & SPARE WHEEL

DATE JAN. 15, 1964
DR. BY B. PARKER
CHECKED H. VAN PELT
APPR.
APPR.

FIRST USED: 1965
Oldsmobile GRAPHIC ILLUSTRATION
SERIES: F85
REF. 10-E 14-E
PAGE: 10-2.3
PART NO. 387458

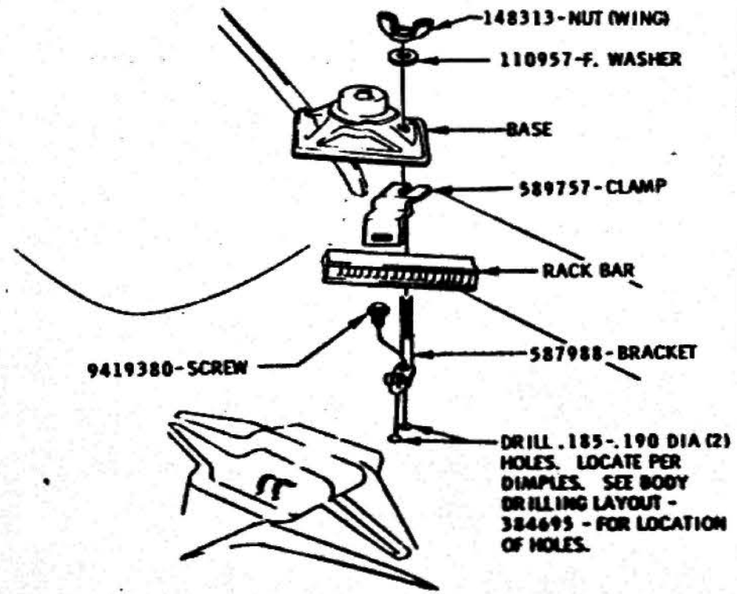

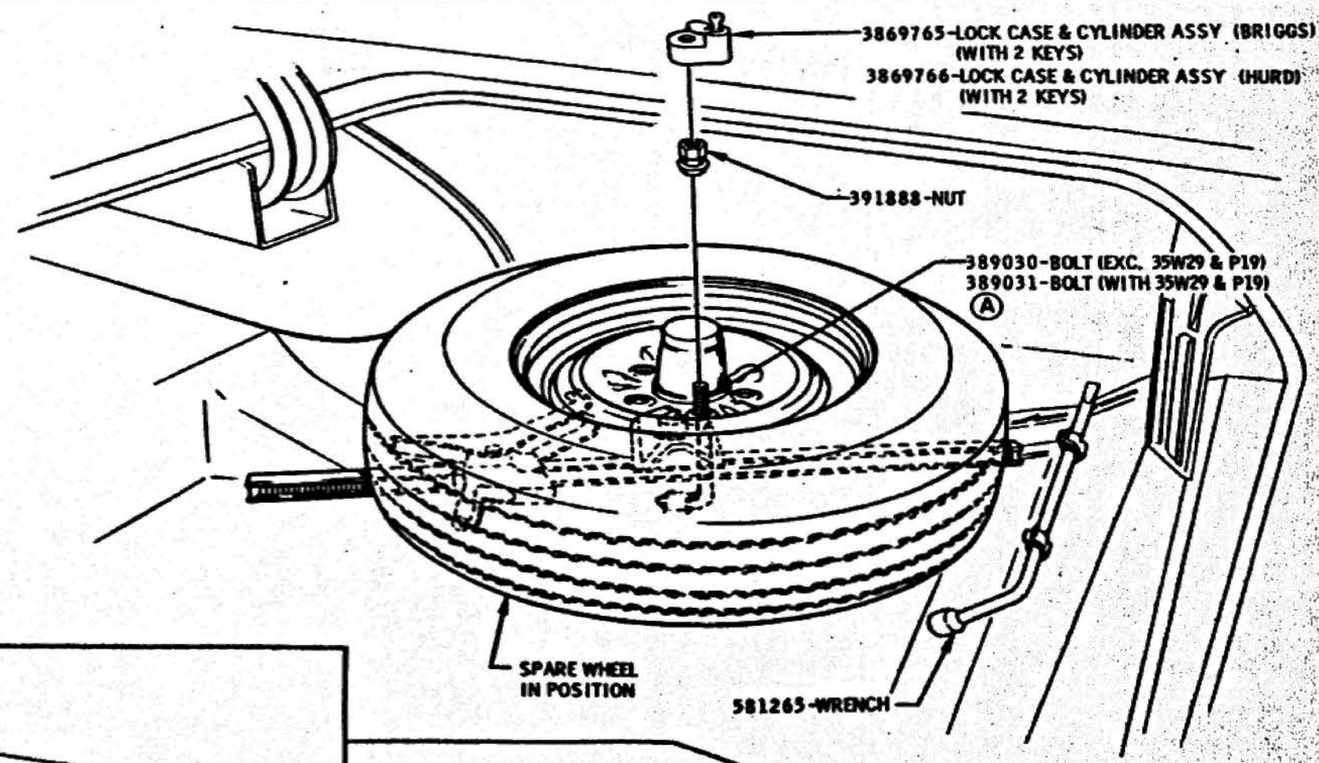

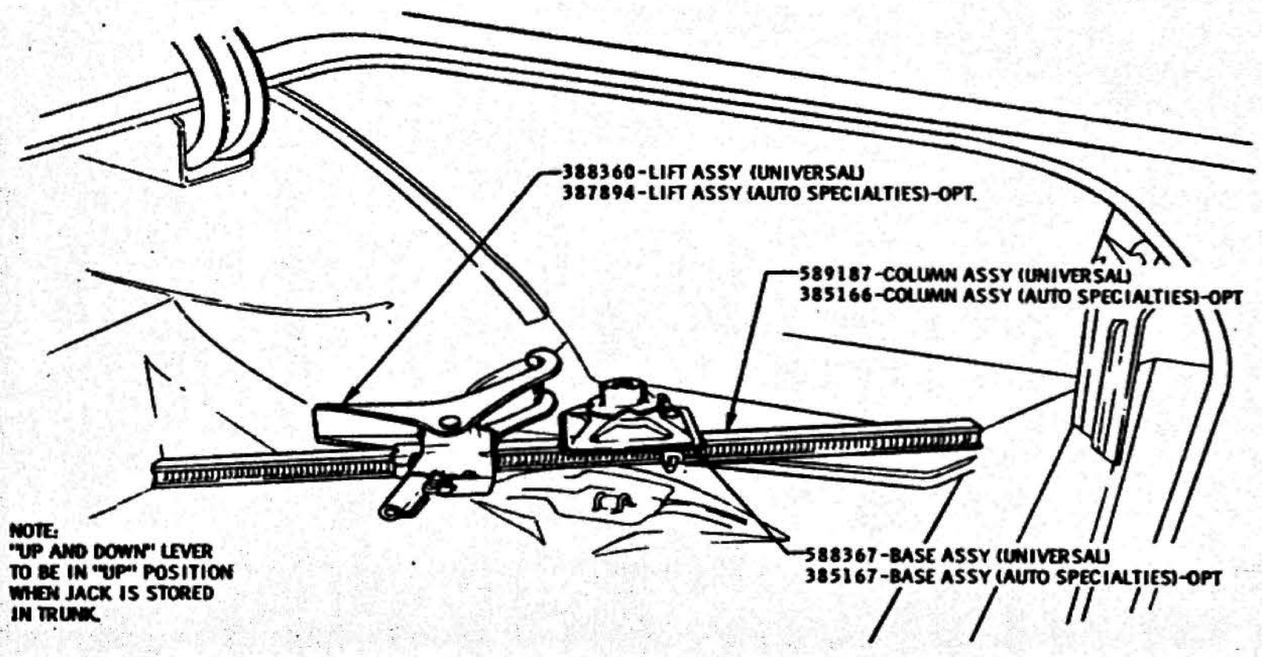

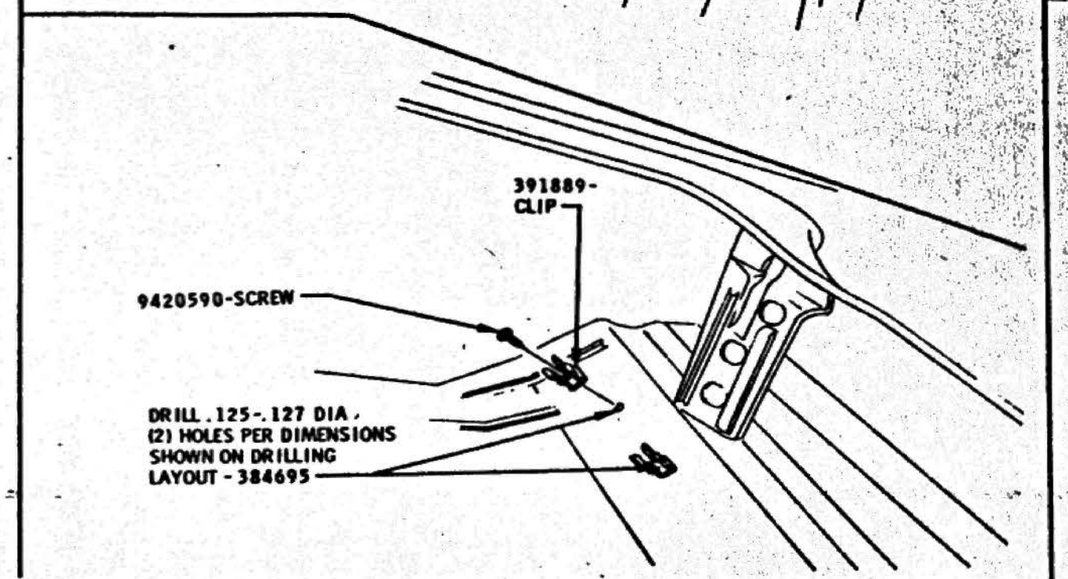

DATE	SYM	REVISION	DR.	CK.	DATE	SYM	REVISION	DR.	CK.	DATE	SYM	REVISION	DR.	CK.
										2-11-65	A	389031 BOLT NO. ADDED		UP

INSTALLATION JACK, SPARE WHEEL AND LOCK (CHROME WHEEL)

DATE JAN. 29. 1965
DR. BY B. PARKER
CHECKED H. VAN PELT
APPR.
APPR.

FIRST USED 1965 — Oldsmobile Graphic Illustration — PAGE 10-2.4

SERIES F 85 — REF. 10E 35N 38 WP19 — PART NO. 387458

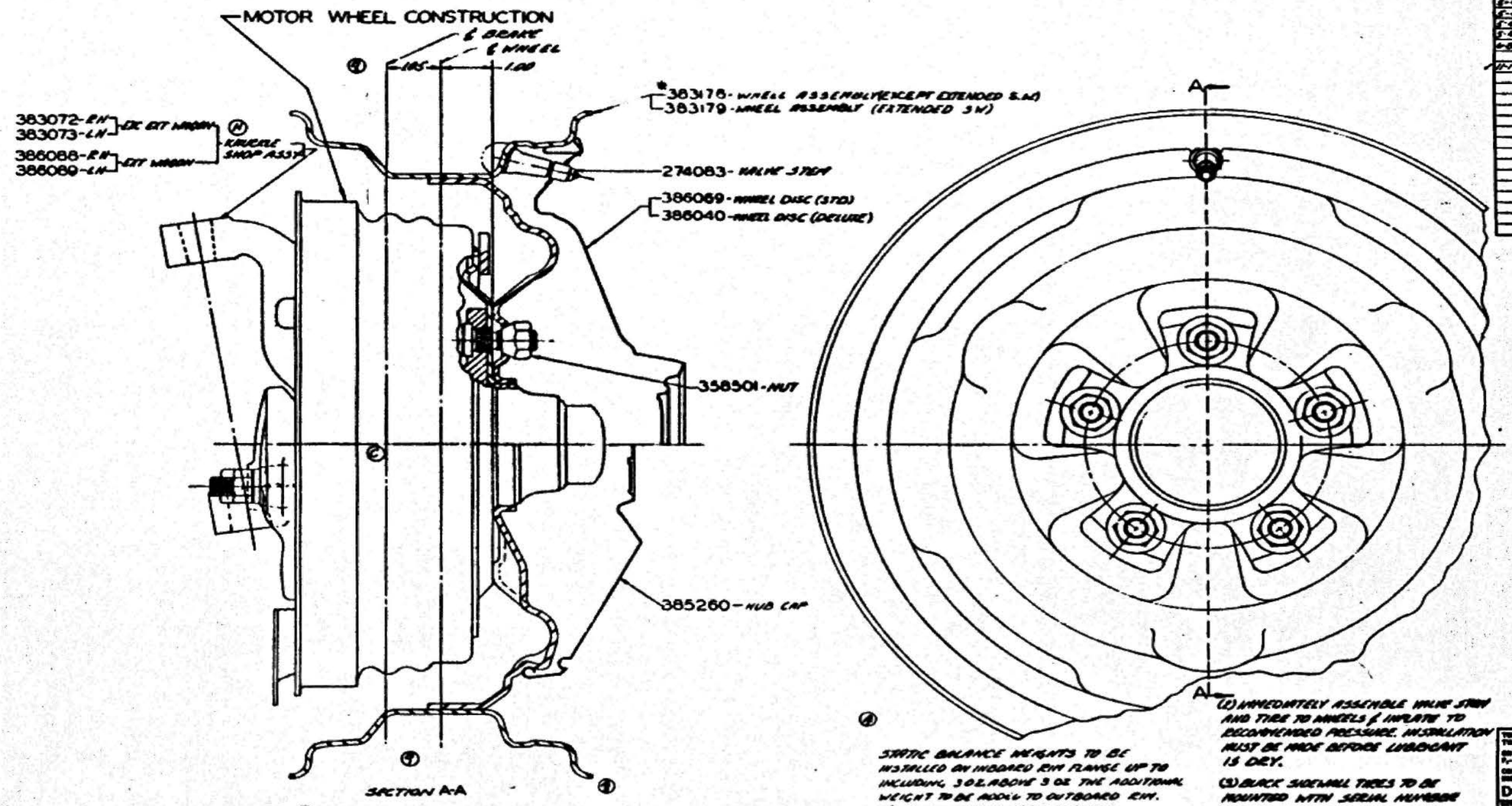

RIM SIZE	TIRE SIZE	TIRE OUT OF BALANCE WITHOUT BALANCE COUPLE	WHEEL & DRUM OUT OF BALANCE	WHEEL OUT OF BALANCE	WHEEL & TIRE ASSY MAX STATIC OUT OF BALANCE	TIRE PRESSURE INITIAL INFLATION AT ASSY PLANTS	TIRE PRESSURE RECOMMENDED FOR SERVICE	RUNOUT OF WHEEL & TIRE ASSY RADIAL	RUNOUT OF WHEEL & TIRE ASSY LATERAL
M15 SJ	6.95-14	25 IN OZ MAX	2 IN OZ	10 IN OZ	4 IN OZ	24 TO 30 LBS	24 LBS	.063 TIR	.081 TIR
M15 J	7.35-14	25 IN OZ MAX	2 IN OZ	10 IN OZ	4 IN OZ	24 TO 30 LBS	24 LBS **	.063 TIR	.081 TIR
M RE-JK	7.75-14	25 IN OZ MAX	2 IN OZ	10 IN OZ	4 IN OZ	24 TO 30 LBS	24 LBS **	.063 TIR	.081 TIR

STATIC BALANCE WEIGHTS TO BE INSTALLED ON INBOARD RIM FLANGE UP TO INCLUDING 3 OZ. ABOVE 3 OZ THE ADDITIONAL WEIGHT TO BE ADDED TO OUTBOARD RIM. 4½ OZ MAX WEIGHT PER ASSEMBLY.

* EXCEPT EXT SW PICTURE SHOWN.
** 28 LBS ON ALL STATION WAGONS.

ASSY INSTRUCTIONS - TIRE TO WHEEL:
(1) LUBRICATE TIRE BEADS AND VALVE STEM ASSEMBLY WITH APPROVED LUBRICANT - SEE PROCESS CHART.

(2) IMMEDIATELY ASSEMBLE VALVE STEM AND TIRE TO WHEELS & INFLATE TO RECOMMENDED PRESSURE. INSTALLATION MUST BE MADE BEFORE LUBRICANT IS DRY.

(3) BLACK SIDEWALL TIRES TO BE MOUNTED WITH SERIAL NUMBERS MOLD NUMBERS AND OTHER MANUFACTURING INFORMATION TOWARD CENTERLINE OF CAR.

1-4-64	P	NOTES REMOVED		
5-1-64	Q	DIMENSIONS REVISED		
5-1-64	C	DUPLICATE NOTE DEL		
5-1-64	D	TIRE SIZE REVISED		
5-1-64	E	NOTES ADDED		
5-1-64	F	M15 7.75 x 14 Bld	F.Y.	
6-8-64	G	OPT. SERVICE CHART		
		REVISED	F.Y.	
11-17-64	H	REVISED TO DETAIL		

DO NOT SCALE

SEPT 3, 1963 — F. BEDFORD
PULL — BEDFORD
1965

LAYOUT-BRAKE AND WHEEL-FRONT

F.Y.

386139

SHEET 1 OF 2

GRA 3A

10-3.1

F-85

OLDSMOBILE DIVISION
GENERAL MOTORS CORPORATION
LANSING, MICHIGAN

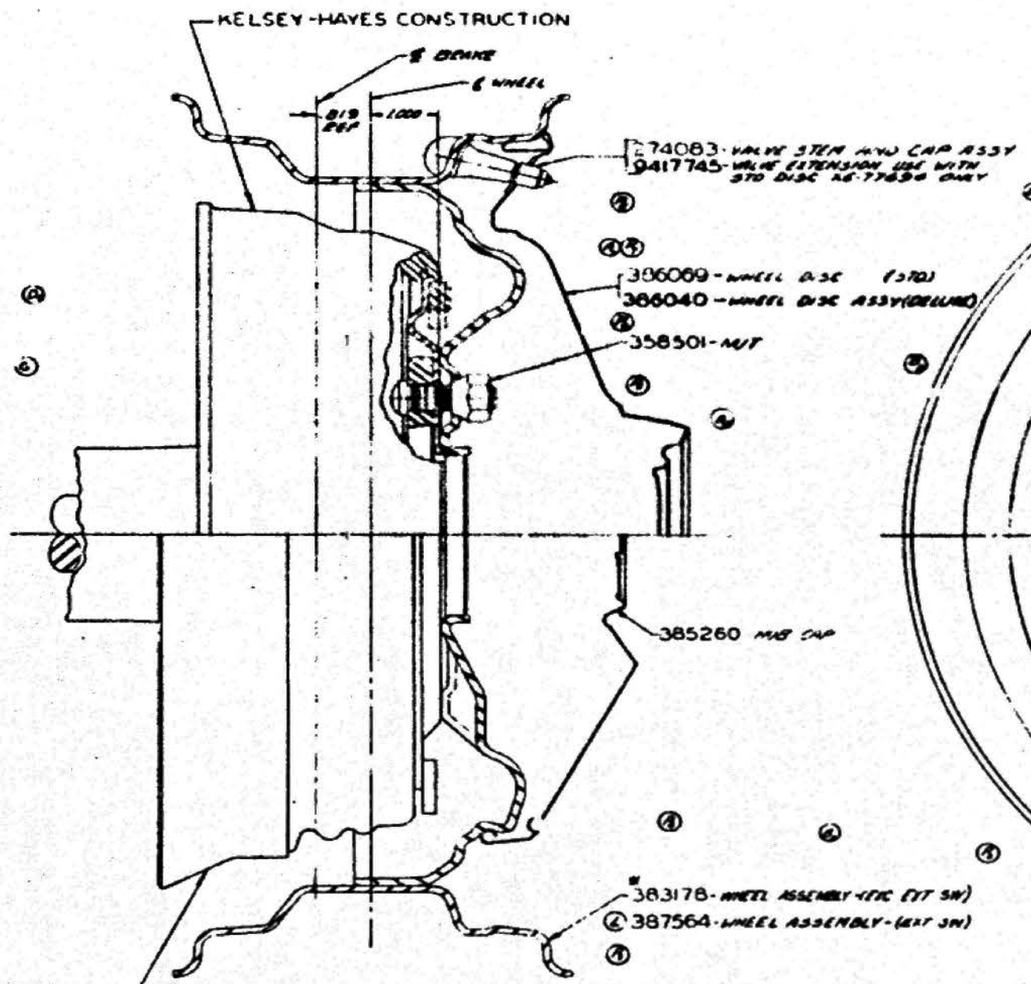

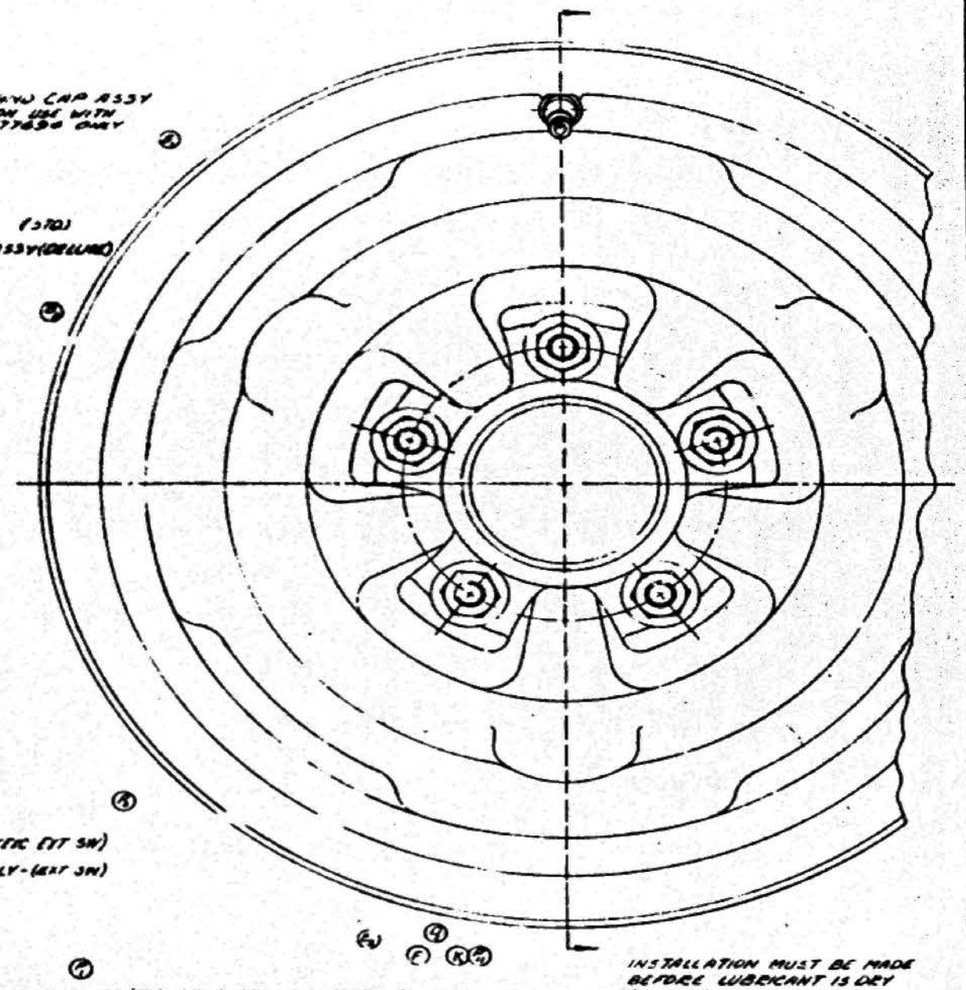

0-30-63		WAS YD-77700								
10-8-63	A	PART NO ADDED								
10-8-63	B	ETC EXC SW ADDED								
10-8-63	C	NOTE ADDED	P-Y							
11-18-63	D	ETC EXT SW ADDED								
11-18-63	E	PART NO'S ADDED	P-Y							
2-26-63	F	OPTION ADDED	P-Y							
2-14-64	G	ETC EXT SW ADDED								
2-14-64	H	PART NO. ADDED								
3-2-64	J	NOTE ADDED								
3-9-66	K	WAS 1361846								
3-10-66	L	387564 WAS 383178	F.G.B.							
3-2-66	M	WAS 3-4-5-1-2								
3-8-66	N	WAS 3-4-5-1-2-3	F.G.B.							
5-4-66	P	DIMENSIONS WAS MM								
5-4-66	R	TIRE SIZE REVISED								
5-4-66	S	WAS 14 X 6J MM								
5-4-66	T	NOTE REMOVED								

RIM SIZE	TIRE SIZE	TIRE OUT OF BALANCE WITHOUT BALANCE DOWN	HUB & DRUM OUT OF BALANCE	WHEEL OUT OF BALANCE	WHEEL & TIRE ASSY MAX STATIC OUT OF BALANCE	TIRE PRESSURE: INITIAL INFLATION AT ASSY PLANTS	TIRE PRESSURE: RECOMMENDED FOR SERVICE	RUNOUT OF WHEEL & TIRE ASSY: RADIAL	RUNOUT OF WHEEL & TIRE ASSY: LATERAL
14X5J	6.95X14	28 IN OZ MAX	2 IN OZ	10 IN OZ	4 IN OZ	24 TO 50 LBS	24 LBS	.063 TIR	.080 TIR
14X5J	7.35X14	28 IN OZ MAX	2 IN OZ	10 IN OZ	4 IN OZ	24 TO 50 LBS	24 LBS **	.063 TIR	.080 TIR
14X6JK	7.75X14	28 IN OZ MAX	2 IN OZ	10 IN OZ	4 IN OZ	24 TO 50 LBS	24 LBS **	.063 TIR	.080 TIR

STATIC BALANCE WEIGHTS TO BE INSTALLED ON INBOARD RIM FLANGE UP TO AND INCLUDING 30 OZ ABOVE 30 OZ THE ADDITIONAL WEIGHT TO BE ADDED TO OUTBOARD RIM 4½ OZ MAX WEIGHT PER ASSEMBLY

ASSY INSTRUCTIONS - TIRE TO WHEEL
(1) LUBRICATE TIRE BEADS & VALVE STEM ASSEMBLY WITH APPROVED LUBRICANT SEE PROCESS CHART
(2) IMMEDIATELY ASSEMBLE VALVE STEM AND TIRE TO WHEEL AND INFLATE TO RECOMMENDED PRESSURE (SEE TABLE)

INSTALLATION MUST BE MADE BEFORE LUBRICANT IS DRY
(3) BLACK SIDEWALL TIRES TO BE MOUNTED WITH SERIAL NUMBER MOLD NUMBER & OTHER MFG INFORMATION TOWARD CENTER-LINE OF CAR

* EXCEPT EXT SW PICTURE SHOWN.
** 28 LBS ON ALL STATION WAGONS

10-3.2

SHEET 2 OF 2

TOLERANCES UNLESS OTHERWISE SPECIFIED ± .02 ALLOWED ON TWO PLACE DECIMALS & .005 ALLOWED ON THREE PLACE DECIMALS ON ALL CASTINGS AND FORGINGS ALLOW FOR FINISH AS FOLLOWS: F-.005; F-.010; F-.015; F-.10 ETC.
COMMERCIAL TOLERANCES APPLY TO SHEET METAL, GASKETS, TUBING, ROLLED, DRAWN OR EXTRUDED SECTIONS & STANDARD PARTS

DO NOT SCALE

DATE SEPT 6, 1963	DR. E. BREEDING
SCALE FULL	CH. BEDFORD
MODEL YEAR 1965	DATE
	DATE

LAYOUT-BRAKE AND WHEEL-REAR

P-Y

386139

OLDSMOBILE DIVISION
GENERAL MOTORS CORPORATION
LANSING, MICHIGAN

F-85

036	A	WAS ID-77700			

OLDSMOBILE DIVISION
GENERAL MOTORS CORPORATION
LANSING, MICHIGAN

MOTOR WHEEL CONSTRUCTION

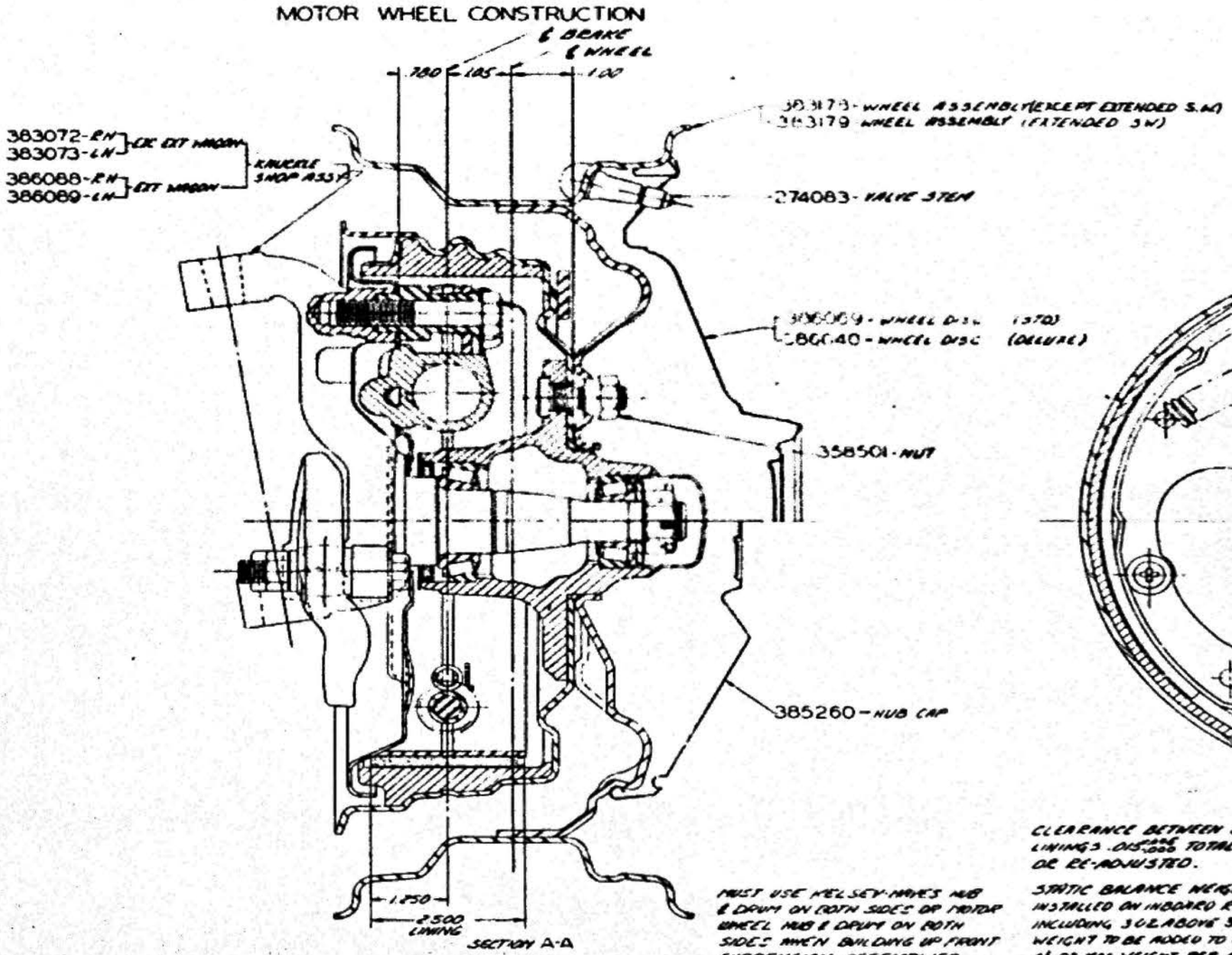

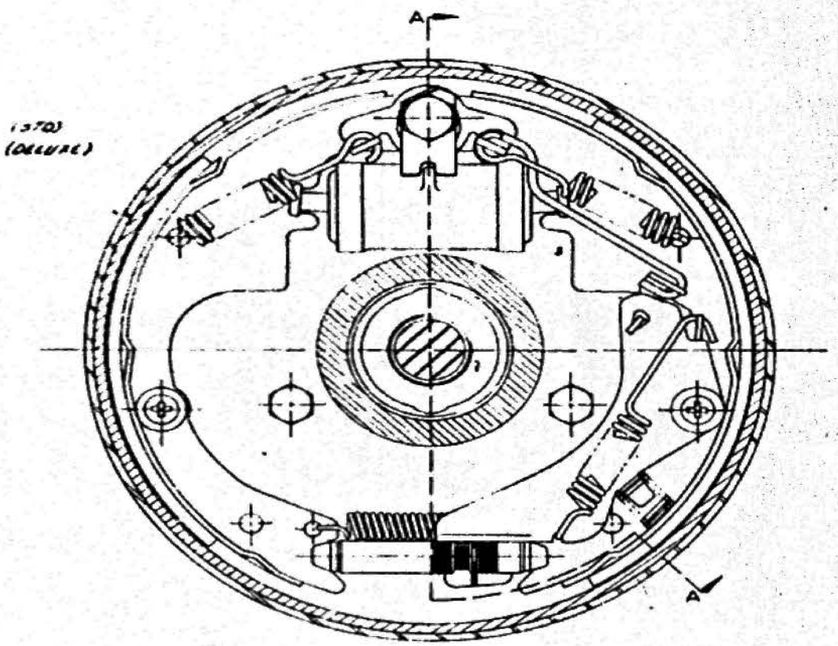

MUST USE KELSEY-HAYES HUB & DRUM ON BOTH SIDES OF MOTOR WHEEL HUB & DRUM ON BOTH SIDES WHEN BUILDING UP FRONT SUSPENSION ASSEMBLIES.

CLEARANCE BETWEEN BRAKE DRUM AND LININGS .015 FOR TOTAL WHEN ASSEMBLED OR RE-ADJUSTED.

STATIC BALANCE WEIGHTS TO BE INSTALLED ON INBOARD RIM FLANGE UP TO INCLUDING 3 OZ ABOVE 3 OZ THE ADDITIONAL WEIGHT TO BE ADDED TO OUTBOARD RIM. 4½ OZ MAX WEIGHT PER ASSEMBLY.

ALL WHEEL NUTS MUST BE HAND STARTED BEFORE USING POWER WRENCH TO PREVENT GALLING OR CROSS THREADING

ASSY INSTRUCTIONS - TIRE TO WHEEL:
(1) LUBRICATE TIRE BEADS AND VALVE STEM ASSEMBLY WITH APPROVED LUBRICANT - SEE PROCESS CHART.
(2) IMMEDIATELY ASSEMBLE VALVE STEM AND TIRE TO WHEELS & INFLATE TO RECOMMENDED PRESSURE. INSTALLATION MUST BE MADE BEFORE LUBRICANT IS DRY.
(3) BLACK SIDEWALL TIRES TO BE MOUNTED WITH SERIAL NUMBER MOLD NUMBERS AND OTHER MANUFACTURING INFORMATION TOWARD CENTERLINE OF CAR.

KELSEY HAYES CONSTRUCTION

RIM SIZE	TIRE SIZE	TIRE OUT OF BALANCE WITHOUT BALANCE DOWN	HUB & DRUM OUT OF BALANCE	WHEEL OUT OF BALANCE	WHEEL & TIRE ASSY MAX STATIC OUT OF BALANCE	TIRE PRESSURE INITIAL INFLATION AT ASSY PLANTS	TIRE PRESSURE RECOMMENDED FOR SERVICE	RUNOUT OF WHEEL & TIRE ASSY RADIAL	RUNOUT OF WHEEL & TIRE ASSY LATERAL
(4 X 5 J)	6.50 X 14	23 IN OZ MAX	2 IN OZ	10 IN OZ	4 IN OZ	24 TO 30 LBS	24 LBS	.063 TIR	.081 TIR
(4 X 5 J)	7.00 X 14	23 IN OZ MAX	2 IN OZ	10 IN OZ	4 IN OZ	24 TO 30 LBS	24 LBS	.063 TIR	.081 TIR
(4 X 5 J)	7.50 X 14	23 IN OZ MAX	2 IN OZ	10 IN OZ	4 IN OZ	24 TO 30 LBS	24 LBS	.063 TIR	.081 TIR

10-3.1

386139
SHEET 1 OF 2
LAST CHANGE

TOLERANCES UNLESS OTHERWISE SPECIFIED ± .02 ALLOWED ON TWO PLACE DECIMALS & .010 ALLOWED ON THREE PLACE DECIMALS
ON ALL CASTINGS AND FORGINGS ALLOW FOR FINISH AS FOLLOWS
F1-.030; F2-.06; F3-.09; F4-.12 ETC.
COMMERCIAL TOLERANCES APPLY TO SHEET METAL, GAUGES, TUBING, ROLLED, DRAWN OR EXTRUDED SECTIONS & STANDARD PARTS

DO NOT SCALE

DATE SEPT 9, 1965	DR. E. BREEDING
SCALE FULL	CK. BEDFORD
YEAR MOD 1965	APPL.
33300-34-35-36-38	APPL.
REFERENCE	APPL.
REFERENCE TYPE	

TITLE
LAYOUT-BRAKE AND WHEEL-FRONT

F-V

386139

SHEET 1 OF 2

GRP. 5A

C

OLDSMOBILE DIVISION OF GENERAL MOTORS

U S RYL PART NO	FIRESTN PART NO	GDRICH. PART NO	GDYEAR. PART NO	TIRE SIZE	WALL COLOR	PLY	SERIES	USAGE, BODIES, ETC.
3867433	3867401	3867497	3867465	6.95 X 14	BLACK	2	33300	STD 27,69 EXC. C60, P26,P27,P28,P29, P30,T14,T15,98P16 OR 98P18.
3867441	3867409	3867505	3867473	7.35 X 14	BLACK	2	33300	STD 35 EXCEPT C60, P26,P27,P28,P29, P30,T14,T15,98P16 OR 98P18,
3867441	3867409	3867505	3867473	7.35 X 14	BLACK	2	33300	C60 AIR COND. 27,69
3867449	3867417	3867513	3867481	7.75 X 14	BLACK	2	33300	C60 AIR COND. 35
3867434	3867402	3867498	3867466	6.95 X 14	WHITE	2	33300	P26 W/W 27,69 E/C60
3867442	3867410	3867506	3867474	7.35 X 14	WHITE	2	33300	P26 W/W 35 E/C60
3867442	3867410	3867506	3867474	7.35 X 14	WHITE	2	33300	P26 W/W 27,69 W/C60
3867450	3867418	3867514	3867482	7.75 X 14	WHITE	2	33300	P26 W/W 35 W/C60
#	1371503			7.75 X 15	WHITE	4*	33300	P27 15 INCH WHL & T
#	1371502			7.75 X 15	BLACK	4*	33300	P28 15 INCH WHL & T
3867441	3867409	3867505	3867473	7.35 X 14	BLACK	2	33300	P29 OST B/W 27,69 EXCEPT C60
3867449	3867417	3867513	3867481	7.75 X 14	BLACK	2	33300	P29 OST B/W 35 E/C6
3867442	3867410	3867506	3867474	7.35 X 14	WHITE	2	33300	P30 OST W/W 27,69 EXCEPT C60
3867450	3867418	3867514	3867482	7.75 X 14	WHITE	2	33300	P30 OST W/W 35 E/C6
3867461	3867429	3867525	3867493	7.75 X 14	BLACK	4	33300	T14 HEAVY DUTY
3867462	3867430	3867526	3867494	7.75 X 14	WHITE	4	33300	T15 HEAVY DUTY
#	3867406			6.95 X 14	WHITE	4*	33300	98P16 W/W 27,69 EXCEPT C60
#	3867414			7.35 X 14	WHITE	4*	33300	98P16 W/W 35 E/C60
#	3867414			7.35 X 14	WHITE	4*	33300	98P16 W/W 27,69 WITH C60
#	3867422			7.75 X 14	WHITE	4*	33300	98P16 W/W 35 W/C60
#	3867414			7.35 X 14	WHITE	4*	33300	98P18 OST W/W 27,69 EXCEPT C60
#	3867422			7.75 X 14	WHITE	4*	33300	98P18 OST W/W 35 EXCEPT C60

* INDICATES NYLON TIRES - ALL OTHERS ARE RAYON.
\# INDICATES LATEST REVISIONS.

CHART - TIRE USAGE - 1965 F-85
ISSUED BY T. R. FERNAND - DWG. BY L. THOMPSON
DATE - NOVEMBER 5, 1964 SUPERSEDES ISSUE OF 7/29/64
SHEET 1 OF 5. PART NO. 388599

OLDSMOBILE DIVISION OF GENERAL MOTORS

U S RYL PART NO	FIRESTN PART NO	GDRICH. PART NO	GDYEAR. PART NO	TIRE SIZE	WALL COLOR	PLY	SERIES	USAGE, BODIES, ETC.
3867441	3867409	3867505	3867473	7.35 X 14	BLACK	2	33400	STD 27,69 EXC. C60, P26,P27,P28,P29, P30,T14,T15,W29, 98P16 OR 98P18.
3867441	3867409	3867505	3867473	7.35 X 14	BLACK	2	33400	STD 35 EXC. C60,P26, P27,P28,P29,P30, T14,T15,98P16 OR 98P18.
3867449	3867417	3867513	3867481	7.75 X 14	BLACK	2	33400	STD 55,65 EXC. P26, P27,P28,T14,T15, OR 98P16.
3867449	3867417	3867513	3867481	7.75 X 14	BLACK	2	33400	C60 A/C 27,35,69
3867442	3867410	3867506	3867474	7.35 X 14	WHITE	2	33400	P26 W/W 27,35,69 EXCEPT C60
3867450	3867418	3867514	3867482	7.75 X 14	WHITE	2	33400	P26 W/W 27,35,69 WITH C60
3867450	3867418	3867514	3867482	7.75 X 14	WHITE	2	33400	P26 WHITE WALL 55,6
#	1371503			7.75 X 15	WHITE	4*	33400	P27 15 INCH WHL & T
#	1371502			7.75 X 15	BLACK	4*	33400	P28 15 INCH WHL & T
3867449	3867417	3867513	3867481	7.75 X 14	BLACK	2	33400	P29 OST B/W 27,35,6 EXCEPT C60
3867450	3867418	3867514	3867482	7.75 X 14	WHITE	2	33400	P30 OST W/W 27,35,6 EXCEPT C60
3867461	3867429	3867525	3867493	7.75 X 14	BLACK	4	33400	T14 HEAVY DUTY
3867462	3867430	3867526	3867494	7.75 X 14	WHITE	4	33400	T15 HEAVY DUTY
#9780802	-------	-------	-------	7.75 X 14	RED	4*	33400	W29 442 PERFORM. 27
#-------	9780804	-------	9780803	7.75 X 14	RED	2*	33400	W29 442 PERFORM. 27
#	3867414			7.35 X 14	WHITE	4*	33400	98P16 W/W 27,35,69 EXCEPT C60
#	3867422			7.75 X 14	WHITE	4*	33400	98P16 W/W 55,65
#	3867422			7.75 X 14	WHITE	4*	33400	98P16 W/W 27,35,69 WITH C60
#	3867422			7.75 X 14	WHITE	4*	33400	98P18 OST W/W 27,35 69 EXCEPT C60

* INDICATES NYLON TIRES - ALL OTHERS ARE RAYON.
\# INDICATES LATEST REVISIONS.

CHART - TIRE USAGE - 1965 F-85
ISSUED BY T. R. FERNAND - DWG. BY L. THOMPSON
DATE - NOVEMBER 5, 1964 SUPERSEDES ISSUE OF 7/29/64
SHEET 2 OF 5. PART NO. 388599

OLDSMOBILE DIVISION OF GENERAL MOTORS

U S RYL PART NO	FIRESTN PART NO	GDRICH. PART NO	GDYEAR. PART NO	TIRE SIZE	WALL COLOR	PLY	SERIES	USAGE, BODIES, ETC.
3867433	3867401	3867497	3867465	6.95 X 14	BLACK	2	33500	STD 27,69 EXC. C60, P26,P27,P28,P29, P30,T14,T15,98P16 OR 98P18.
3867441	3867409	3867505	3867473	7.35 X 14	BLACK	2	33500	STD 35 EXC. C60,P26 P27,P28,P29,P30, T14,T15,98P16 OR 98P18.
3867441	3867409	3867505	3867473	7.35 X 14	BLACK	2	33500	C60 AIR COND. 27,69
3867449	3867417	3867513	3867481	7.75 X 14	BLACK	2	33500	C60 AIR COND. 35
3867434	3867402	3867498	3867466	6.95 X 14	WHITE	2	33500	P26 W/W 27,69 E/C60
3867442	3867410	3867506	3867474	7.35 X 14	WHITE	2	33500	P26 W/W 35 E/C60
3867442	3867410	3867506	3867474	7.35 X 14	WHITE	2	33500	P26 W/W 27,69 W/C60
3867450	3867418	3867514	3867482	7.75 X 14	WHITE	2	33500	P26 W/W 35 W/C60
#	1371503			7.75 X 15	WHITE	4*	33500	P27 15 INCH WHL & T
#	1371502			7.75 X 15	BLACK	4*	33500	P28 15 INCH WHL & T
3867441	3867409	3867505	3867473	7.35 X 14	BLACK	2	33500	P29 OST B/W 27,69 EXCEPT C60
3867449	3867417	3867513	3867481	7.75 X 14	BLACK	2	33500	P29 OST B/W 35 E/C6
3867442	3867410	3867506	3867474	7.35 X 14	WHITE	2	33500	P30 OST W/W 27,69 EXCEPT C60
3867450	3867418	3867514	3867482	7.75 X 14	WHITE	2	33500	P30 OST W/W 35 E/C6
3867461	3867429	3867525	3867493	7.75 X 14	BLACK	4	33500	T14 HEAVY DUTY
3867462	3867430	3867526	3867494	7.75 X 14	WHITE	4	33500	T15 HEAVY DUTY
#	3867406			6.95 X 14	WHITE	4*	33500	98P16 W/W 27,69 EXCEPT C60
#	3867414			7.35 X 14	WHITE	4*	33500	98P16 W/W 35 E/C60
#	3867414			7.35 X 14	WHITE	4*	33500	98P16 W/W 27,69 WITH C60
#	3867422			7.75 X 14	WHITE	4*	33500	98P16 W/W 35 W/C60
#	3867414			7.35 X 14	WHITE	4*	33500	98P18 OST W/W 27,69 EXCEPT C60
#	3867422			7.75 X 14	WHITE	4*	33500	98P18 OST W/W 35 EXCEPT C60

* INDICATES NYLON TIRES - ALL OTHERS ARE RAYON.
\# INDICATES LATEST REVISIONS.

CHART - TIRE USAGE - 1965 F-85
ISSUED BY T. R. FERNAND - DWG. BY L. THOMPSON
DATE - NOVEMBER 5, 1964 SUPERSEDES ISSUE OF 7/29/64
SHEET 3 OF 5. PART NO. 388599

OLDSMOBILE DIVISION OF GENERAL MOTORS

U S RYL PART NO	FIRESTN PART NO	GDRICH. PART NO	GDYEAR. PART NO	TIRE SIZE	WALL COLOR	PLY	SERIES	USAGE, BODIES, ETC
3867441	3867409	3867505	3867473	7.35 X 14	BLACK	2	33600	STD 35,69 EXC. C60 P26,P27,P28,P29, P30,T14,T15,98P1 OR 98P18.
3867449	3867417	3867513	3867481	7.75 X 14	BLACK	2	33600	C60 AIR CONDITIONI
3867442	3867410	3867506	3867474	7.35 X 14	WHITE	2	33600	P26 WHITE WALL E/C
3867450	3867416	3867514	3867482	7.75 X 14	WHITE	2	33600	P26 WHITE WALL W/C
#	1371503			7.75 X 15	WHITE	4*	33600	P27 15 INCH WHL &
#	1371502			7.75 X 15	BLACK	4*	33600	P28 15 INCH WHL &
3867449	3867417	3867513	3867481	7.75 X 14	BLACK	2	33600	P29 OST B/W E/C60
3867450	3867418	3867514	3867482	7.75 X 14	WHITE	2	33600	P30 OST W/W E/C60
3867461	3867429	3867525	3867493	7.75 X 14	BLACK	4	33600	T14 HEAVY DUTY
3867462	3867430	3867526	3867494	7.75 X 14	WHITE	4	33600	T15 HEAVY DUTY
#	3867414			7.35 X 14	WHITE	4*	33600	98P16 W/W E/C60
#	3867422			7.75 X 14	WHITE	4*	33600	98P16 W/W W/C60
#	3867422			7.75 X 14	WHITE	4*	33600	98P18 OST W/W E/C6
3867441	3867409	3867505	3867473	7.35 X 14	BLACK	2	33800	STD 27,37 EXC. C60 P26,P27,P28,P29, P30,T14,T15,W29, 98P16 OR 98P18.
3867441	3867409	3867505	3867473	7.35 X 14	BLACK	2	33800	STD 67 EXC. C60,P2 P29,P30,T14,T15, W29,98P16 OR P18
3867449	3867417	3867513	3867481	7.75 X 14	BLACK	2	33800	STD 55,65 EXC. P26 P27,P28,T14,T15, OR 98P16.
3867449	3867417	3867513	3867481	7.75 X 14	BLACK	2	33800	C60 A/C 27,37,67
3867442	3867410	3867506	3867474	7.35 X 14	WHITE	2	33800	P26 W/W 27,37,67 EXCEPT C6
3867450	3867418	3867514	3867482	7.75 X 14	WHITE	2	33800	P26 W/W 27,37,67 WITH C60
3867450	3867418	3867514	3867482	7.75 X 14	WHITE	2	33800	P26 WHITE WALL 55,
#	1371503			7.75 X 15	WHITE	4*	33800	P27 15 INCH WHL & 27,37,55,6

* INDICATES NYLON TIRES - ALL OTHERS ARE RAYON.
\# INDICATES LATEST REVISIONS.

CHART - TIRE USAGE - 1965 F-85
ISSUED BY T. R. FERNAND - DWG. BY L. THOMPSON
DATE - NOVEMBER 5, 1964 SUPERSEDES ISSUE OF 7/29/64
SHEET 4 OF 5. PART NO. 388599

OLDSMOBILE DIVISION OF GENERAL MOTORS

U S RYL PART NO	FIRESTN PART NO	GDRICH. PART NO	GDYEAR. PART NO	TIRE SIZE	WALL COLOR	PLY	SERIES	USAGE, BODIES, ETC.
#	1371502			7.75 X 15	BLACK	4*	33800	P28 15 INCH WHL & T 27,37,55,65
3867449	3867417	3867513	3867481	7.75 X 14	BLACK	2	33800	P29 OST B/W 27,37,6 EXCEPT C60
3867450	3867418	3867514	3867482	7.75 X 14	WHITE	2	33800	P30 OST W/W 27,37,6 EXCEPT C60
3867461	3867429	3867525	3867493	7.75 X 14	BLACK	4	33800	T14 HEAVY DUTY
3867462	3867430	3867526	3867494	7.75 X 14	WHITE	4	33800	T15 HEAVY DUTY
#9780802	-------	-------	-------	7.75 X 14	RED	4*	33800	W29 442 PERFORM. 27,37,67
#-------	9780804	-------	9780803	7.75 X 14	RED	2*	33800	W29 442 PERFORM. 27,37,67
#	3867414			7.35 X 14	WHITE	4*	33800	98P16 W/W 27,37,67 EXCEPT C60
#	3867422			7.75 X 14	WHITE	4*	33800	98P16 W/W 55,65
#	3867422			7.75 X 14	WHITE	4*	33800	98P16 W/W 27,37,67 WITH C60
#	3867422			7.75 X 14	WHITE	4*	33800	98P18 OST W/W 27,37 67 EXCEPT C60

* INDICATES NYLON TIRES - ALL OTHERS ARE RAYON.
\# INDICATES LATEST REVISIONS.

CHART - TIRE USAGE - 1965 F-85
ISSUED BY T. R. FERNAND - DWG. BY L. THOMPSON
DATE - NOVEMBER 5, 1964 SUPERSEDES ISSUE OF 7/29/64
SHEET 5 OF 5. PART NO. 388599

OLDSMOBILE DIVISION OF GENERAL MOTORS

U S RYL PART NO	FIRESTN PART NO	GDRICH. PART NO	GDYEAR. PART NO	TIRE SIZE	WALL COLOR	PLY	SERIES	USAGE, BODIES, ETC.
# 388500	388501	388502	388503	8.25 X 14	BLACK	2	35400	STD EXCEPT C60, P26 P28,P29,P30,P88, Q14,98P16 OR P18.
388510	388511	388512	388513	8.55 X 14	BLACK	2	35400	C60 AIR CONDITIONIN
388505	388506	388507	388508	8.25 X 14	WHITE	2	35400	P26 WHITE WALL E/C6
388515	388516	388517	388518	8.55 X 14	WHITE	2	35400	P26 WHITE WALL W/C6
1371461	1371462	1371463	1371464	8.45 X 15	BLACK	2	35400	P28 15 INCH W & T
388510	388511	388512	388513	8.55 X 14	BLACK	2	35400	P29 OST B/W E/C60
388515	388516	388517	388518	8.55 X 14	WHITE	2	35400	P30 OST W/W E/C60
389100	389101	389102	389103	8.55 X 14	BLACK	4	35400	P88 HEAVY DUTY
389110	389111	389112	389113	8.55 X 14	WHITE	4	35400	Q14 HEAVY DUTY
	388534			8.25 X 14	WHITE	4	35400	98P16 W/W E/C60
	388544			8.55 X 14	WHITE	4	35400	98P16 W/W W/C60
	388544			8.55 X 14	WHITE	4	35400	98P18 OST W/W E/C60
# 388500	388501	388502	388503	8.25 X 14	BLACK	2	35600	STD 37,39,69 EXCEPT C60,P26,P28,P29, P30,P88,Q14,Y75, 98P16 OR 98P18.
# 388500	388501	388502	388503	8.25 X 14	BLACK	2	35600	STD 67 EXC. C60,P26 P28,P29,P30,P88, Q14,98P16 OR P18.
388510	388511	388512	388513	8.55 X 14	BLACK	2	35600	C60 AIR CONDITIONIN
388505	388506	388507	388508	8.25 X 14	WHITE	2	35600	P26 WHITE WALL E/C6
388515	388516	388517	388518	8.55 X 14	WHITE	2	35600	P26 WHITE WALL W/C6
1371461	1371462	1371463	1371464	8.45 X 15	BLACK	2	35600	P28 15 INCH W & T
388510	388511	388512	388513	8.55 X 14	BLACK	2	35600	P29 OST B/W E/C60
388515	388516	388517	388518	8.55 X 14	WHITE	2	35600	P30 OST W/W E/C60
389100	389101	389102	389103	8.55 X 14	BLACK	4	35600	P88 HEAVY DUTY
389110	389111	389112	389113	8.55 X 14	WHITE	4	35600	Q14 HEAVY DUTY
# ------	------	------	386028	8.45 X 15	BLACK	4	35600	Y75 15 INCH W & T 37,39,69 WITH B07
	388534			8.25 X 14	WHITE	4	35600	98P16 W/W E/C60
	388544			8.55 X 14	WHITE	4	35600	98P16 W/W W/C60
	388544			8.55 X 14	WHITE	4	35600	98P18 OST W/W E/C60

# INDICATES LATEST REVISIONS.

CHART - TIRE USAGE - 1965 F-85 & REGULAR CARS
ISSUED BY T. R. FERNAND - DWG. BY L. THOMPSON
DATE - JULY 2, 1964 SUPERSEDES ISSUE OF 5/12/64
SHEET 6 OF 8. PART NO. 388599

OLDSMOBILE DIVISION OF GENERAL MOTORS

U S RYL PART NO	FIRESTN PART NO	GDRICH. PART NO	GDYEAR. PART NO	TIRE SIZE	WALL COLOR	PLY	SERIES	USAGE, BODIES, ETC.
# 388500	388501	388502	388503	8.25 X 14	BLACK	2	35800	STD EXCEPT C60, P26, P28,P29,P30,P88, Q14,Y75,98P16 OR 98P18.
388510	388511	388512	388513	8.55 X 14	BLACK	2	35800	C60 AIR CONDITIONING
388505	388506	388507	388508	8.25 X 14	WHITE	2	35800	P26 WHITE WALL E/C60
388515	388516	388517	388518	8.55 X 14	WHITE	2	35800	P26 WHITE WALL W/C60
1371461	1371462	1371463	1371464	8.45 X 15	BLACK	2	35800	P28 15 INCH W & T
388510	388511	388512	388513	8.55 X 14	BLACK	2	35800	P29 OST B/W E/C60
388515	388516	388517	388518	8.55 X 14	WHITE	2	35800	P30 OST W/W E/C60
389100	389101	389102	389103	8.55 X 14	BLACK	4	35800	P88 HEAVY DUTY
389110	389111	389112	389113	8.55 X 14	WHITE	4	35800	Q14 HEAVY DUTY
# ------	------	------	386028	8.45 X 15	BLACK	4	35800	Y75 15 INCH W & T WITH B07.
	388534			8.25 X 14	WHITE	4	35800	98P16 W/W E/C60
	388544			8.55 X 14	WHITE	4	35800	98P16 W/W W/C60
	388544			8.55 X 14	WHITE	4	35800	98P18 OST W/W E/C60
# 388500	388501	388502	388503	8.25 X 14	BLACK	2	36600	STD 57 EXCEPT C60, P26,P28,P29,P30, P88,Q14,98P16 OR 98P18.
388515	388516	388517	388518	8.55 X 14	WHITE	2	36600	STD 67 EXCEPT C60, P30,Q14,98P16,P18.
388510	388511	388512	388513	8.55 X 14	BLACK	2	36600	C60 AIR COND. 57
388524	388525	388526	388527	8.85 X 14	WHITE	2	36600	C60 AIR COND. 67
388505	388506	388507	388508	8.25 X 14	WHITE	2	36600	P26 W/W 57 E/C60
388515	388516	388517	388518	8.55 X 14	WHITE	2	36600	P26 W/W 57 W/C60
1371461	1371462	1371463	1371464	8.45 X 15	BLACK	2	36600	P28 15 INCH W & T 5
388510	388511	388512	388513	8.55 X 14	BLACK	2	36600	P29 OST B/W 57 E/C6
388515	388516	388517	388518	8.55 X 14	WHITE	2	36600	P30 OST W/W 57 E/C6
388524	388525	388526	388527	8.85 X 14	WHITE	2	33600	P30 OST W/W 67 E/C6
389100	389101	389102	389103	8.55 X 14	BLACK	4	36600	P88 HEAVY DUTY 57
389110	389111	389112	389113	8.55 X 14	WHITE	4	36600	Q14 HEAVY DUTY 57,6
	388534			8.25 X 14	WHITE	4	36600	98P16 W/W 57 E/C60
	388544			8.55 X 14	WHITE	4	36600	98P16 W/W 67 E/C60
	388544			8.55 X 14	WHITE	4	36600	98P16 W/W 57 W/C60
	388553			8.85 X 14	WHITE	4	36600	98P16 W/W 67 W/C60
	388544			8.55 X 14	WHITE	4	36600	98P18 OST W/W 57 EXCEPT C60
	388553			8.85 X 14	WHITE	4	36600	98P18 OST W/W 67 EXCEPT C60

# INDICATES LATEST REVISIONS.

CHART - TIRE USAGE - 1965 F-85 & REGULAR CARS
ISSUED BY T. R. FERNAND - DWG. BY L. THOMPSON
DATE - JULY 2, 1964 SUPERSEDES ISSUE OF 5/12/64
SHEET 7 OF 8. PART NO. 388599

OLDSMOBILE DIVISION OF GENERAL MOTORS

U S RYL PART NO	FIRESTN PART NO	GDRICH. PART NO	GDYEAR. PART NO	TIRE SIZE	WALL COLOR	PLY	SERIES	USAGE, BODIES, ETC.
# 388510	388511	388512	388513	8.55 X 14	BLACK	2	38400	STD EXCEPT C60, P26, P28,P29,P30,P88, Q14,98P16 OR P18.
388520	388521	388522	388523	8.85 X 14	BLACK	2	38400	C60 AIR CONDITIONING
388515	388516	388517	388518	8.55 X 14	WHITE	2	38400	P26 WHITE WALL E/C60
388524	388525	388526	388527	8.85 X 14	WHITE	2	38400	P26 WHITE WALL W/C60
1371461	1371462	1371463	1371464	8.45 X 15	BLACK	2	38400	P28 15 INCH W & T EXC. C60,P29,P30
388520	388521	388522	388523	8.85 X 14	BLACK	2	38400	P29 OST B/W E/C60
388524	388525	388526	388527	8.85 X 14	WHITE	2	38400	P30 OST W/W E/C60
389100	389101	389102	389103	8.55 X 14	BLACK	4	38400	P88 HEAVY DUTY
389110	389111	389112	389113	8.55 X 14	WHITE	4	38400	Q14 HEAVY DUTY
	388544			8.55 X 14	WHITE	4	38400	98P16 W/W E/C60
	388553			8.85 X 14	WHITE	4	38400	98P16 W/W W/C60
	388553			8.85 X 14	WHITE	4	38400	98P18 OST W/W E/C60
# 388510	388511	388512	388513	8.55 X 14	BLACK	2	38600	STD EXCEPT C60, P26, P28,P29,P30,P88, Q14,98P16 OR P18.
388520	388521	388522	388523	8.85 X 14	BLACK	2	38600	C60 AIR CONDITIONING
388515	388516	388517	388518	8.55 X 14	WHITE	2	38600	P26 WHITE WALL E/C60
388524	388525	388526	388527	8.85 X 14	WHITE	2	38600	P26 WHITE WALL W/C60
1371461	1371462	1371463	1371464	8.45 X 15	BLACK	2	38600	P28 15 INCH W & T EXC. C60,P29,P30
388520	388521	388522	388523	8.85 X 14	BLACK	2	38600	P29 OST B/W E/C60
388524	388525	388526	388527	8.85 X 14	WHITE	2	38600	P30 OST W/W E/C60
389100	389101	389102	389103	8.55 X 14	BLACK	4	38600	P88 HEAVY DUTY
389110	389111	389112	389113	8.55 X 14	WHITE	4	38600	Q14 HEAVY DUTY
	388544			8.55 X 14	WHITE	4	38600	98P16 W/W E/C60
	388553			8.85 X 14	WHITE	4	38600	98P16 W/W W/C60
	388553			8.85 X 14	WHITE	4	38600	98P18 OST W/W E/C60
388520	388521	388522	388523	8.85 X 14	BLACK	2	39860	99 DRIVEAWAY CHASSI

# INDICATES LATEST REVISIONS.

CHART - TIRE USAGE - 1965 F-85 & REGULAR CARS
ISSUED BY T. R. FERNAND - DWG. BY L. THOMPSON
DATE - JULY 2, 1964 SUPERSEDES ISSUE OF 5/12/64
SHEET 8 OF 8. PART NO. 388599

3-25-63		WAS 10-77470			
3-2-64	A	REVISED TO DETAIL			
3-6-64	B	REVISED TO DETAIL			
4-24-64	C	580970 WAS 382842			

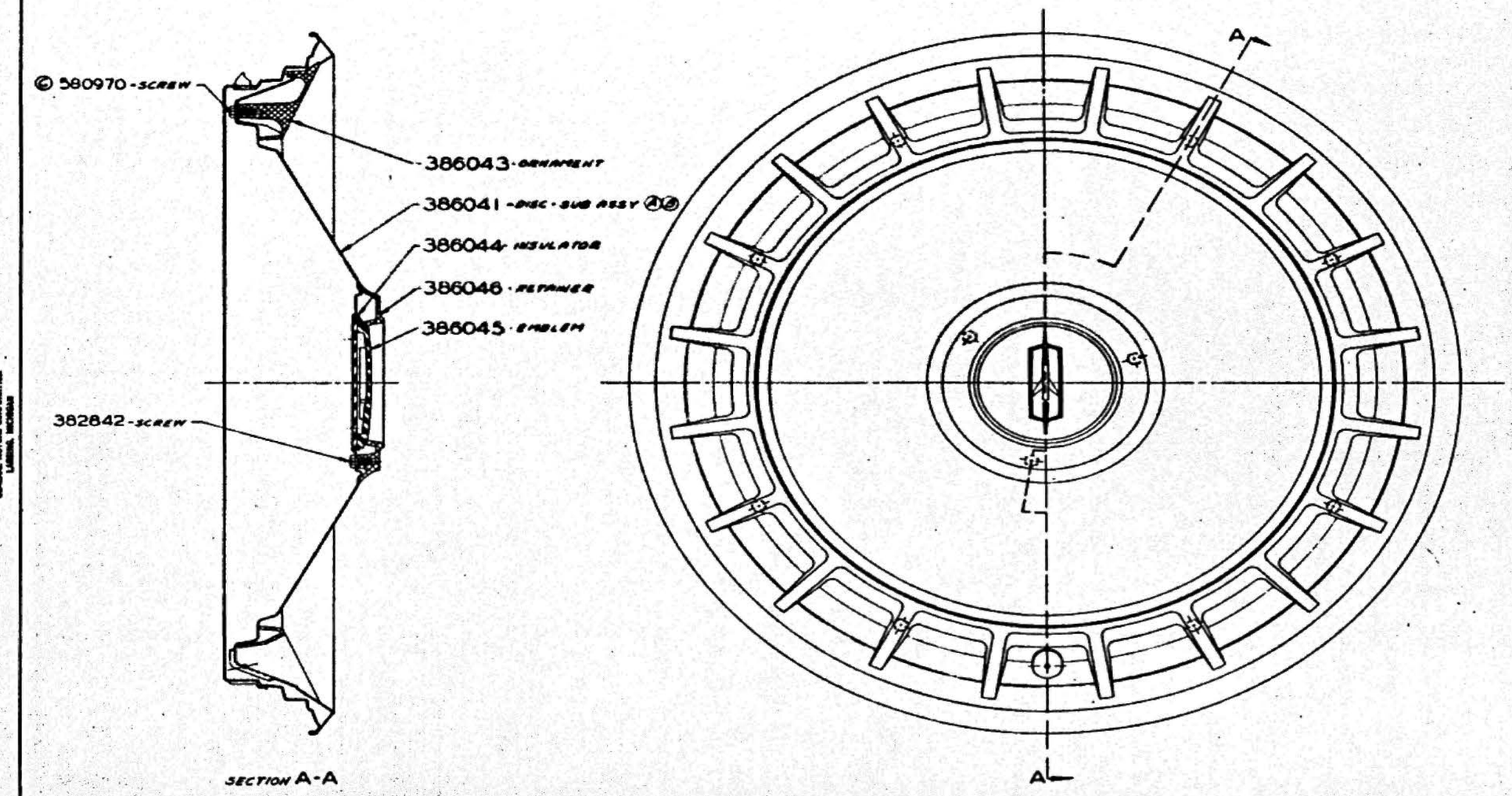

OLDSMOBILE DIVISION
GENERAL MOTORS CORPORATION
LANSING, MICHIGAN

386040
SHEET 1 of 1
LAST CHANGE C

TOLERANCES UNLESS OTHERWISE SPECIFIED ± .02 ALLOWED ON TWO PLACE DECIMALS ± .005 ALLOWED ON THREE PLACE DECIMALS

ON ALL CASTINGS AND FORGINGS ALLOW FOR FINISH AS FOLLOWS F-.005, F-.01, F-.02, F-.12 ETC.

COMMERCIAL TOLERANCES APPLY TO SHEET METAL GAUGES, TUBING, ROLLED, DRAWN OR EXTRUDED SECTIONS & STANDARD PARTS

DO NOT SCALE

DATE AUG. 21, 1963	DR. G. ARNTSON
SCALE FULL	CK. BEDFORD
MODEL YEAR 1965	DATE
REFERENCE XE-77407	DATE

DISC ASSEMBLY - WHEEL

C 386040

10-5.1*

386040 1 of 1

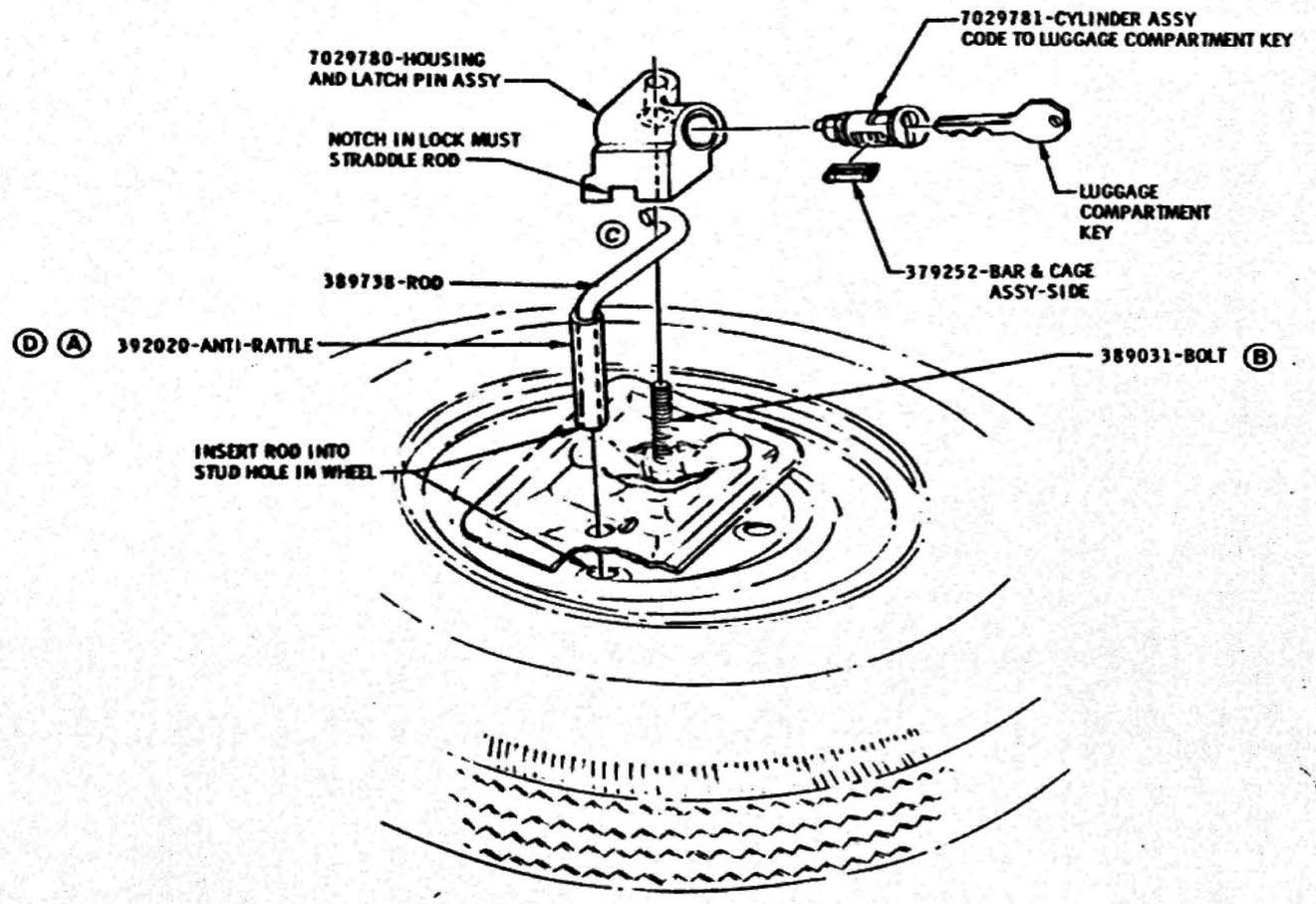

INSTALLATION SPARE WHEEL LOCK (EXCEPT STATION WAGON)

DATE	SYM	REVISION	DR.	CK.	DATE	SYM	REVISION	DR.	CK.	DATE	SYM	REVISION	DR.	CK.
										5-19-65	D	ANTI-RATTLE NO. ADDED	WJ	VP
										3-2-65	C	REVISED TO DETAIL	BA	VP
										2-11-65	B	389031 BOLT ADDED	BA	VP
										1-15-65	A	HOSE ADDED	BA	VP

INSTALLATION SPARE WHEEL LOCK

DATE AUG. 7, 1964
DR. BY B. PARKER
CHECKED TITUS
APPR.
APPR.

FIRST USED 1965
Oldsmobile Service ILLUSTRATION
SERIES BIG CAR & F85
REF. 35P19
PAGE 10-7.1
PART NO. 390294

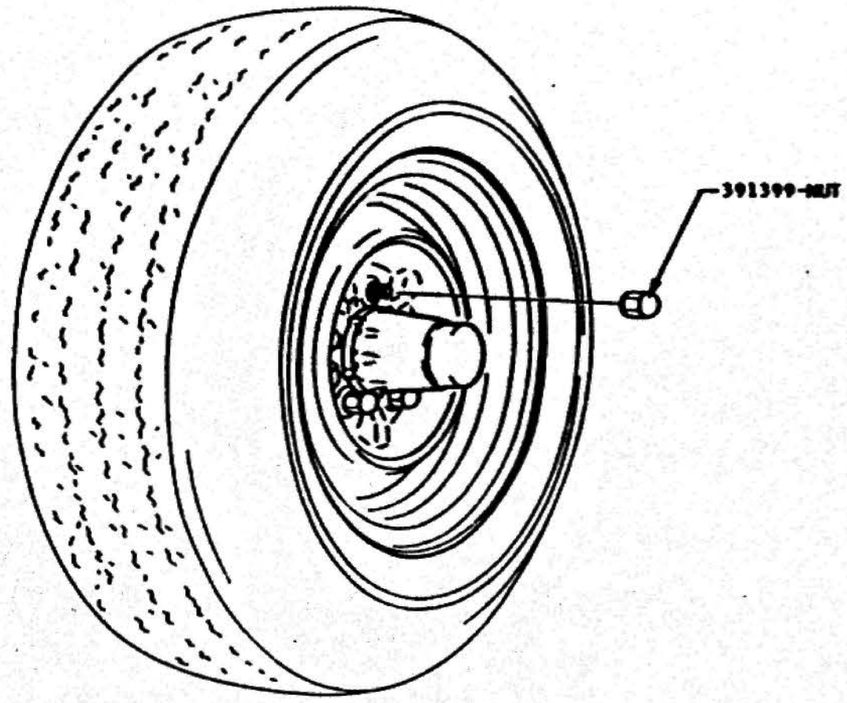

WHEEL WITH ORNAMENT IN ASSEMBLED POSITION

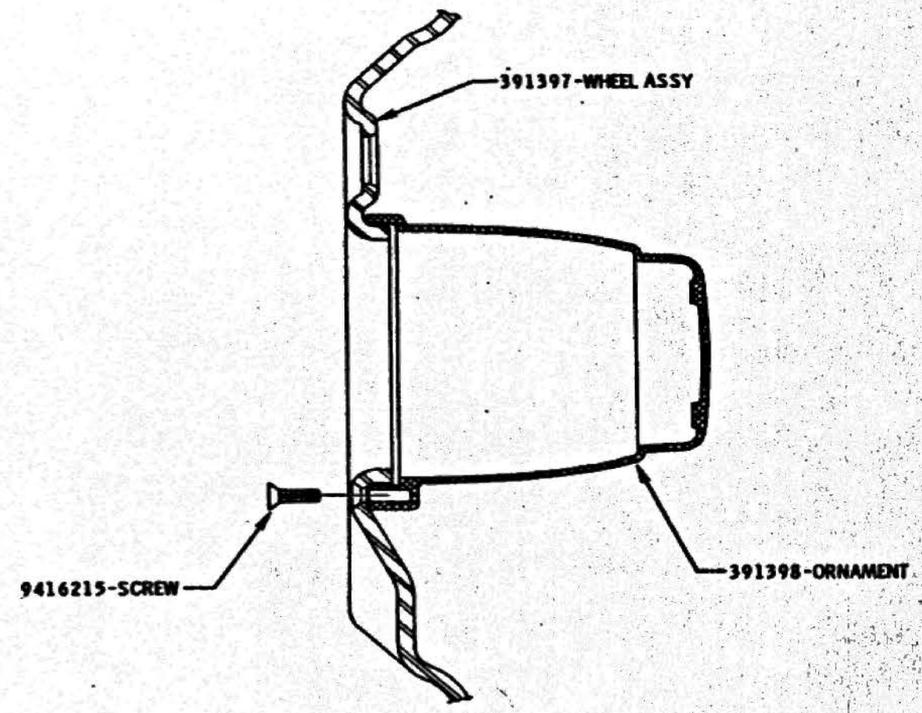

SECTION THRU WHEEL AND ORNAMENT

DATE	SYM	REVISION	DR.	CK.	DATE	SYM	REVISION	DR.	CK.	DATE	SYM	REVISION	DR.	CK.
											B			
												ON NEW FORMAT WAS 8" SIZE, 8" x 10"		
										1-18-65	A	REVISED J. REDEMANN		

INSTALLATION **WHEEL ORNAMENT**

DATE NOV. 23, 1964
DR. BY L. SEWARD
CHECKED BODFORD
APPR. T.R. FERNAND
APPR. R.W. ELY

FIRST USED 1965

Oldsmobile DIVISION ILLUSTRATION

SERIES F-85

REF. 35N98

PAGE 10-7.2

PART NO. 391396

SHEET METAL

DRAWING NO.	DRAWING NAME	PAGE NO.
387016	SHEET METAL	11 - 2.1
387718	SHEET METAL CLEARANCES	11 - 3.1
387403	FENDER IDENTIFICATION CHART	11 - 4.1
386689	HOOD ASSEMBLY - COMPLETE	11 - 5.1

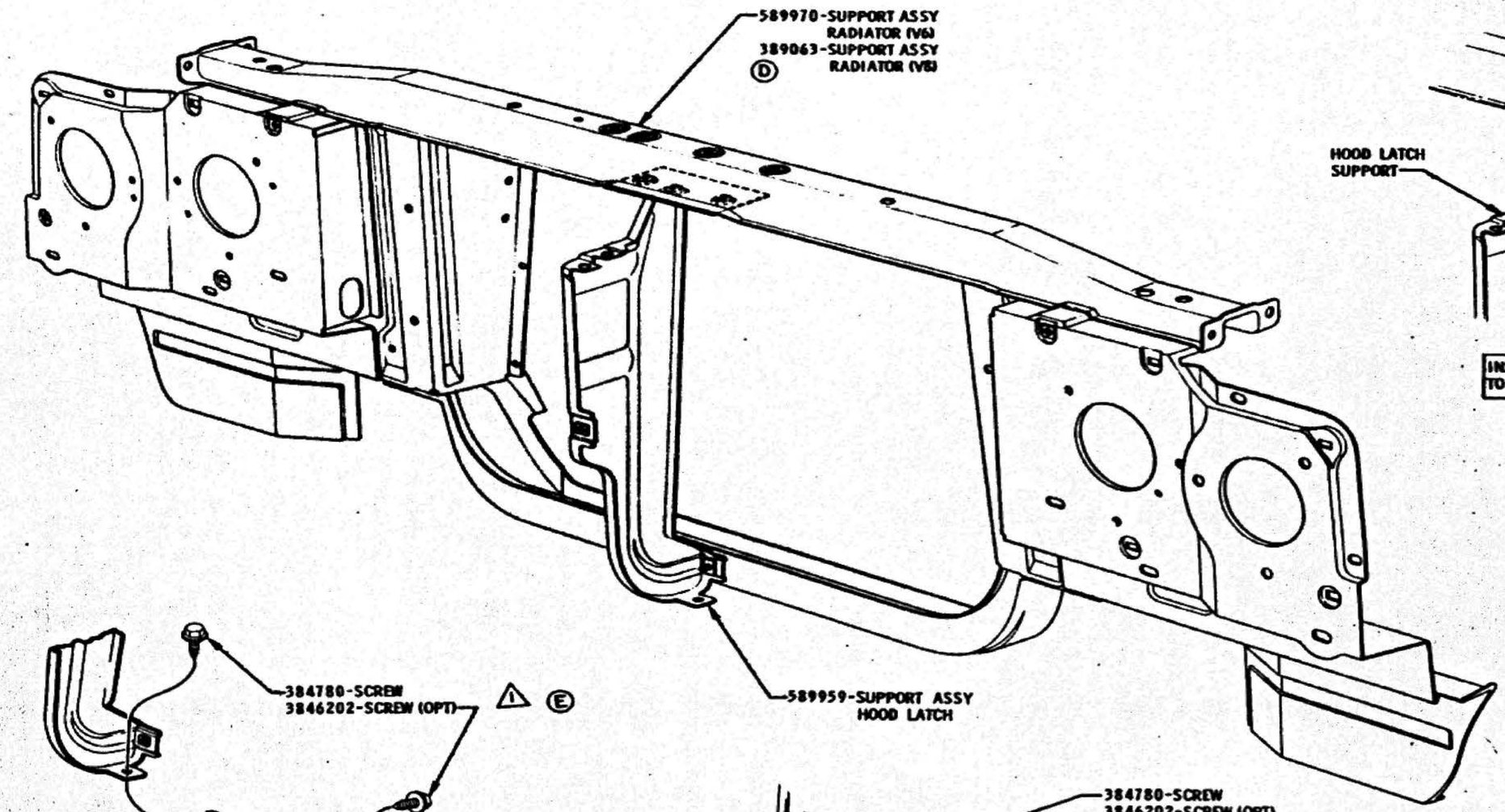

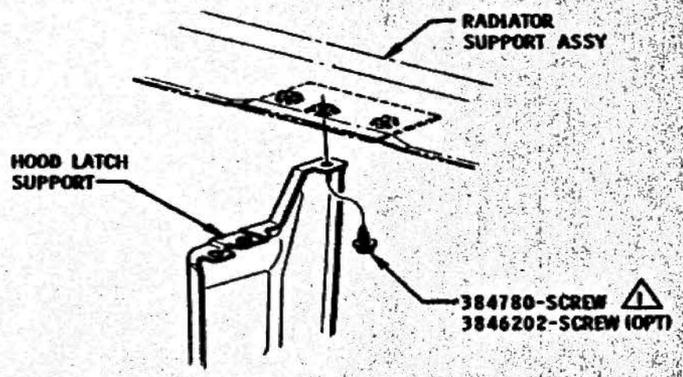

INSTALLATION OF HOOD LATCH SUPPORT TO RADIATOR SUPPORT ASSY

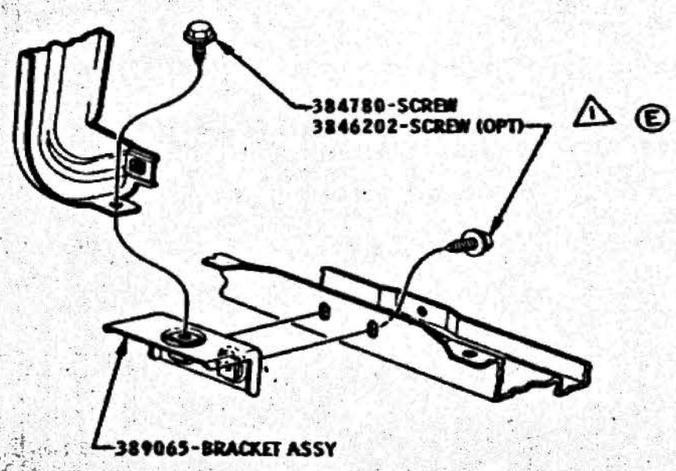

(V8 ONLY)

INSTALLATION OF HOOD LATCH SUPPORT TO RADIATOR SUPPORT

C

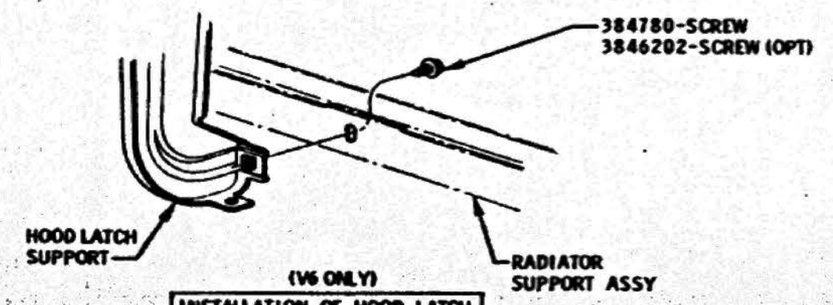

(V6 ONLY)

INSTALLATION OF HOOD LATCH SUPPORT TO RADIATOR SUPPORT

15 - 20 FT. LBS. B

5-28-64	E	TORQUE ADDED	EP	VD	
5-22-64	D	PART NO. ADDED	AG	VD	
5-22-64	C	VIEW ADDED	AG	VD	
5-22-64	B	MAS 14-18 FT. LBS.	CG	VD	
4-24-64	A	TORQUE SPEC. ADDED	PW	VD	

INSTALLATION — SHEET METAL

DATE DEC. 27, 1963
DR. BY JOSEPH V. GALL
CHECKED H. VAN PELT
APPR.

FIRST USED 1965 — Oldsmobile Graphic Illustration — PAGE 11-2.1

SERIES F85 — REF. 11E — PART NO. 387016

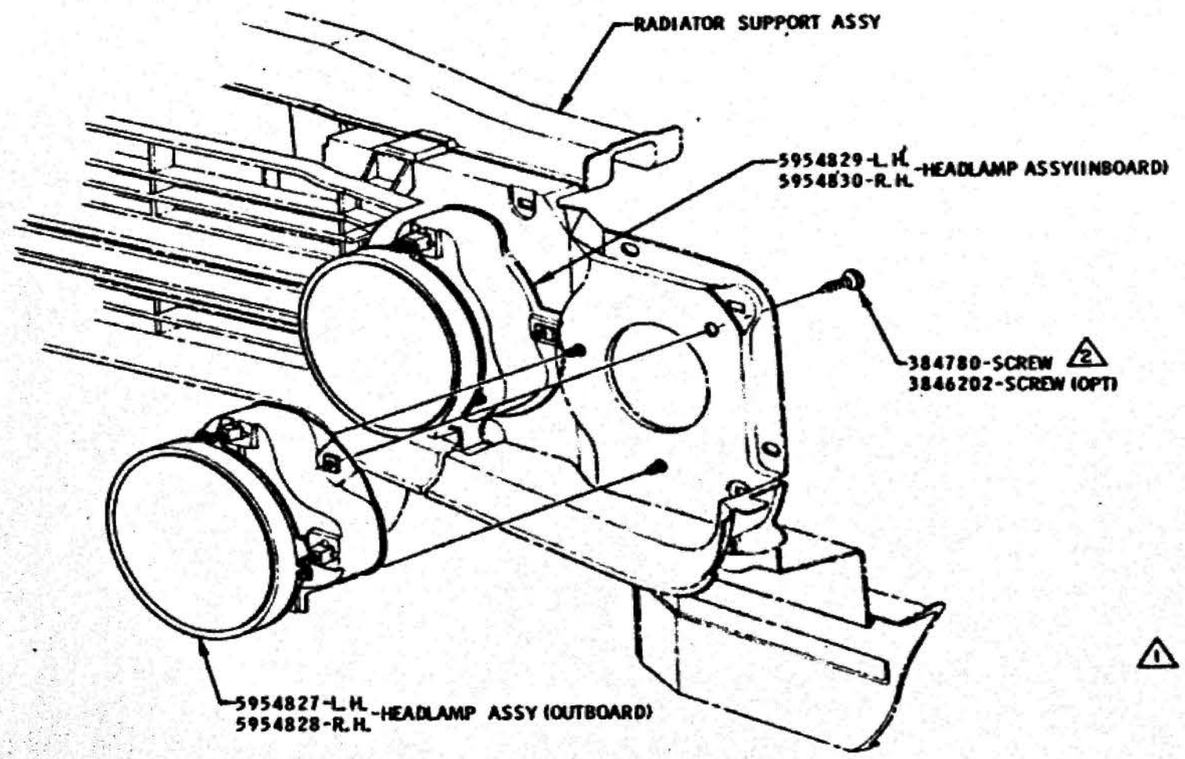

INSTALLATION OF HEADLAMPS TO RADIATOR SUPPORT ASSY

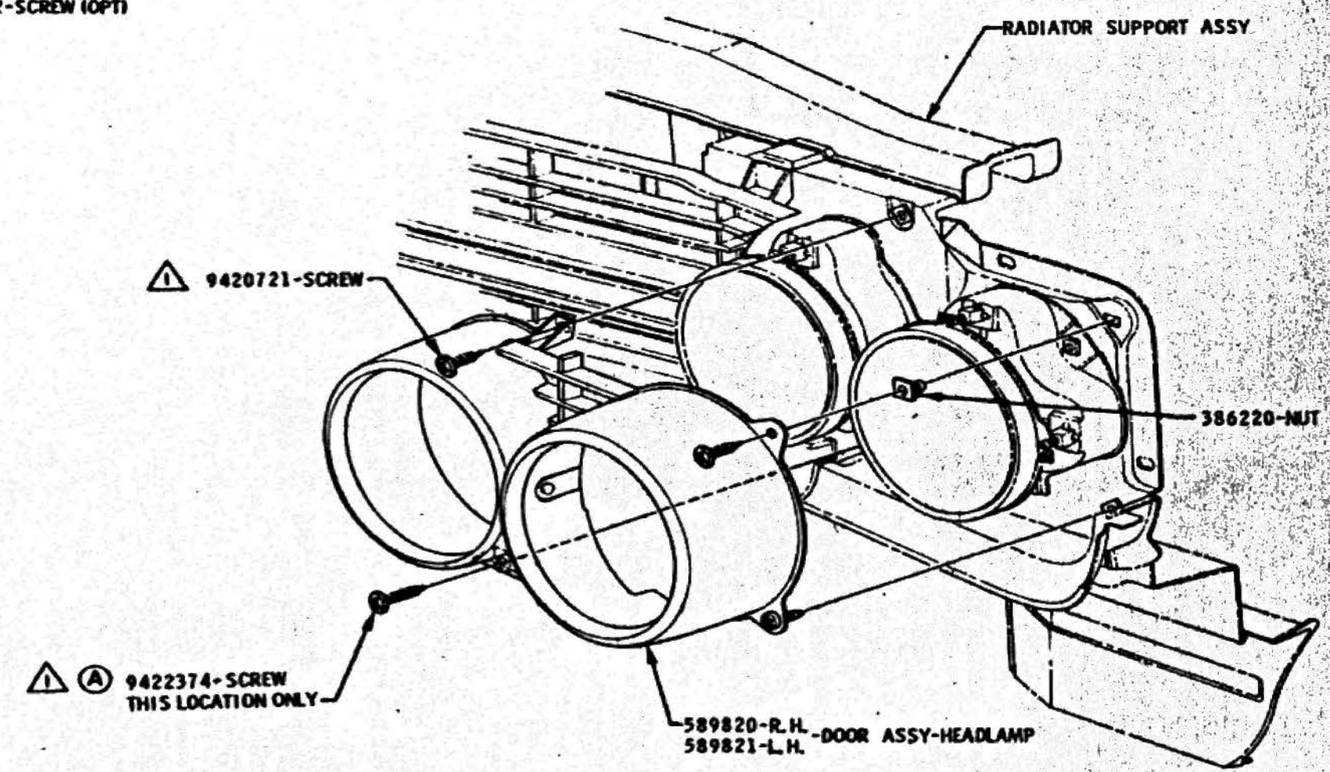

INSTALLATION OF HEADLAMP DOORS TO RADIATOR SUPPORT ASSY

1 15 - 20 IN. LBS.
2 15 - 20 FT. LBS.
B

DATE	SYM	REVISION	DR	CK	DATE	SYM	REVISION	DR	CK	DATE	SYM	REVISION	DR	CK
										5-18-64	B	TORQUE LBS. ADDED	GB	VP
										1-23-64	A	9422374 NO. ADDED		VP

INSTALLATION SHEET METAL
DATE DEC. 27, 1963
DR. BY JOSEPH V. GALL
CHECKED H. VAN PELT
APPR.
FIRST USED 1965
Oldsmobile GRAPHIC ILLUSTRATION
SERIES F85
REF. 18 C
PAGE 11-2.3
PART NO. 387016

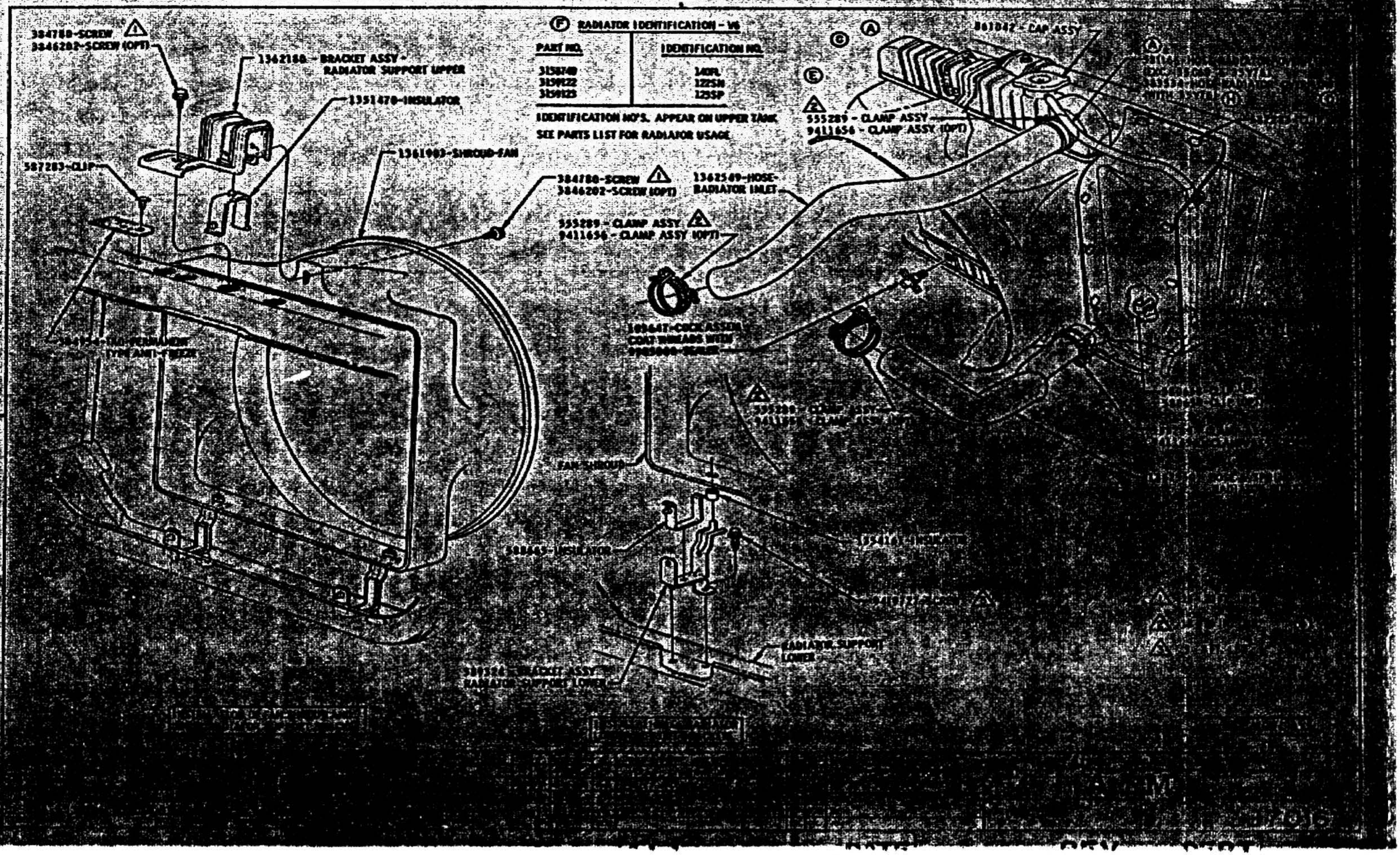
RADIATOR IDENTIFICATION - V6
PART NO.
IDENTIFICATION NO.
3158740
3159222
3159123
140PL
122SN
125SP
IDENTIFICATION NO'S. APPEAR ON UPPER TANK
SEE PARTS LIST FOR RADIATOR USAGE
384780-SCREW
3846202-SCREW (OPT)
1362160 - BRACKET ASSY - RADIATOR SUPPORT UPPER
1351470-INSULATOR
587283-CLIP
1361983-SHROUD-FAN
384780-SCREW
3846202-SCREW (OPT)
1362569-HOSE-RADIATOR INLET
555289 - CLAMP ASSY
9411656 - CLAMP ASSY (OPT)
861042 - CAP ASSY
555289 - CLAMP ASSY
9411656 - CLAMP ASSY (OPT)
FAN SHROUD
RADIATOR SUPPORT LOWER

© GENERAL MOTORS CORP. 1965

RADIATOR IDENTIFICATION

PART NO.	IDENTIFICATION NO.	APPLICATION
3002344	144 FR	Std. V8 (SMT)
3002345	145 FS	Std. V8 (HMT)
3002346	146 FT	Std. V8 WITH A/C (HMT, SMT)
3002347	147 FU	Std. V8 WITH Y76 (HMT, SMT)
3005141	141 FM	W29 (HMT)
3005142	142 FF	W29 (SMT)
3005143	143 FJ	W29 WITH A/C (HMT, SMT)

IDENTIFICATION NO'S. APPEAR ON UPPER TANK

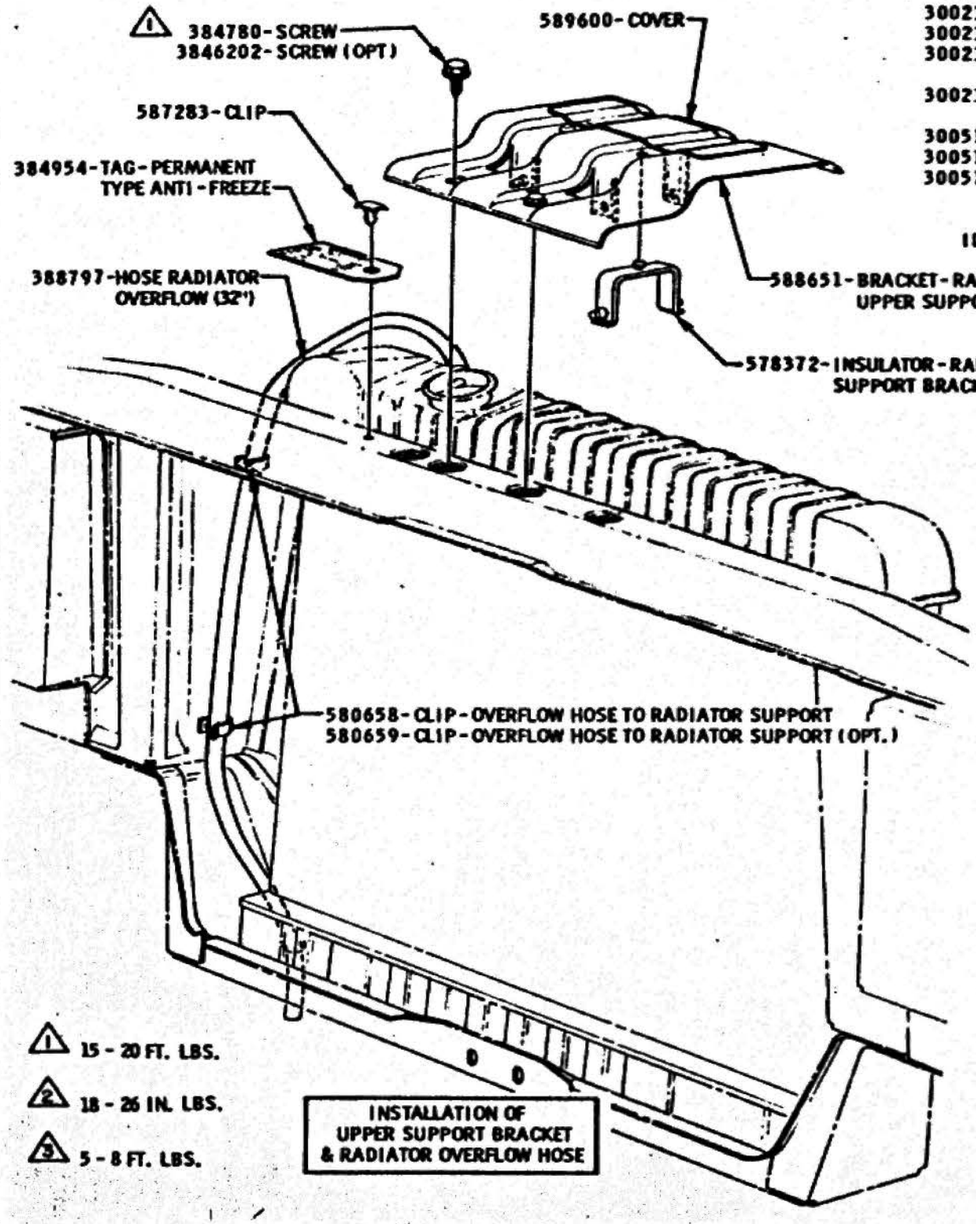

INSTALLATION OF UPPER SUPPORT BRACKET & RADIATOR OVERFLOW HOSE

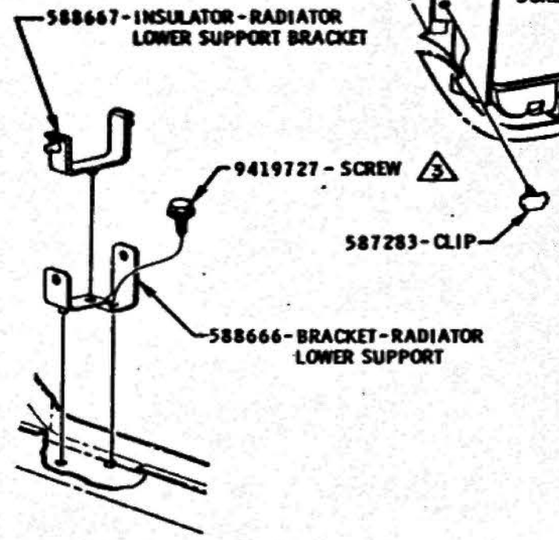

RADIATOR LOWER SUPPORT

INSTALLATION OF RADIATOR LOWER SUPPORT BRACKET

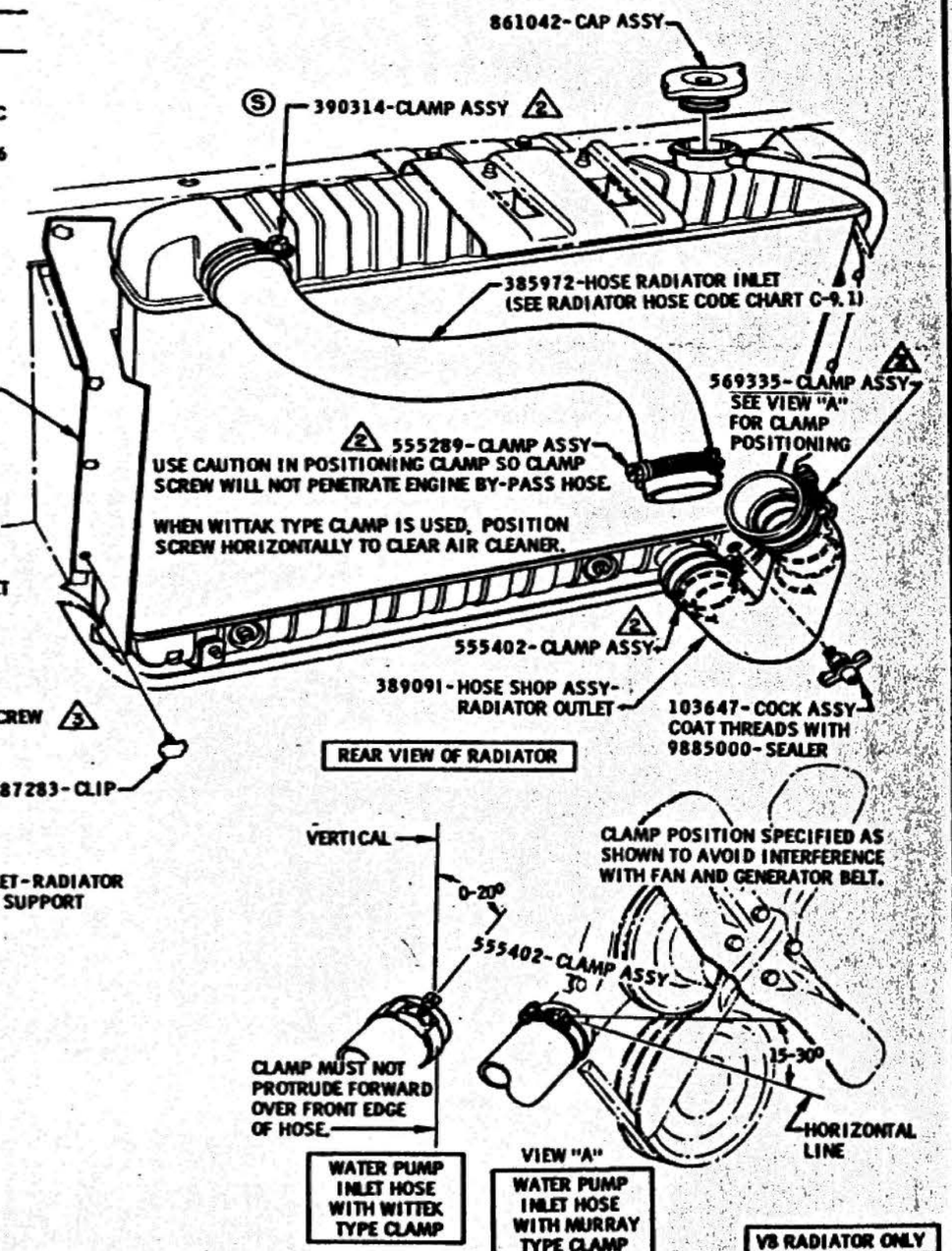

DATE	SYM	REVISION	DR.	CK.	DATE	SYM	REVISION	DR.	CK.	DATE	SYM	REVISION	DR.	CK.
										1H9-64	S	MLS 555402 CLAMP	JC	VD

INSTALLATION **SHEET METAL**

DATE DEC. 27, 1963
DR. BY C. MAP
CHECKED H. VAN PELT
APPR.
APPR.

FIRST USED 1965

Oldsmobile Service ILLUSTRATION

PAGE 11-2.5

DIVISION FBS 34-36-3800

REF 6K2 13A 13B 13C

PART NO. 387016

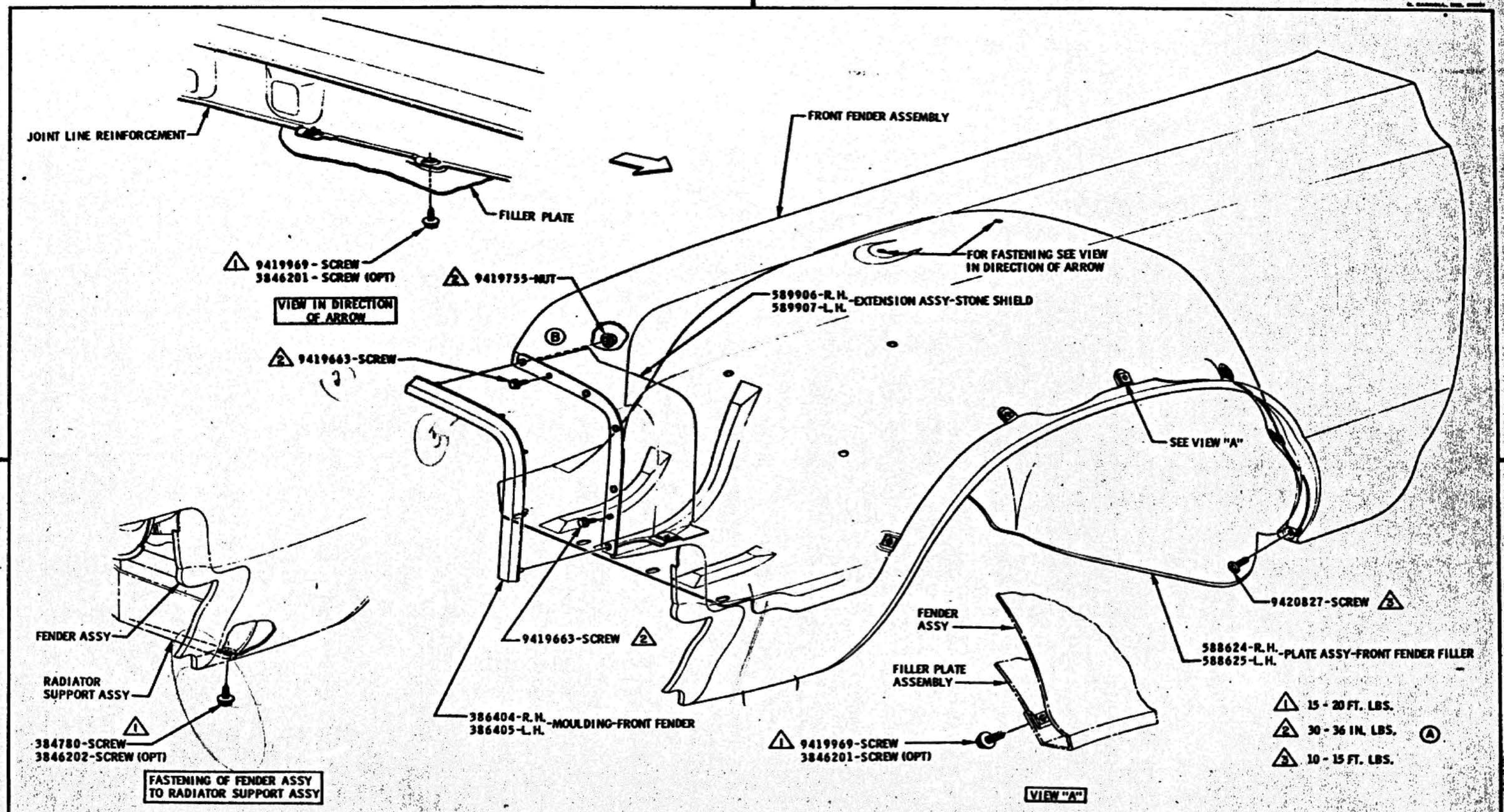

8-27-64	B	FLANGE REMOVED	G.B.	WD
5-18-64	A	TORQUE LBS. ADDED	G.B.	WD

INSTALLATION — SHEET METAL

DATE DEC. 27, 1963
DR. BY JOSEPH H. GALL
CHECKED H. VAN PELT
APPR.

FIRST USED 1965

Oldsmobile GRAPHIC ILLUSTRATION

SERIES FRS

REF. 11A 11B

PAGE 11-2.6

PART NO. 387016

OLDSMOBILE DIVISION GENERAL MOTORS CORPORATION LANSING 21, MICHIGAN

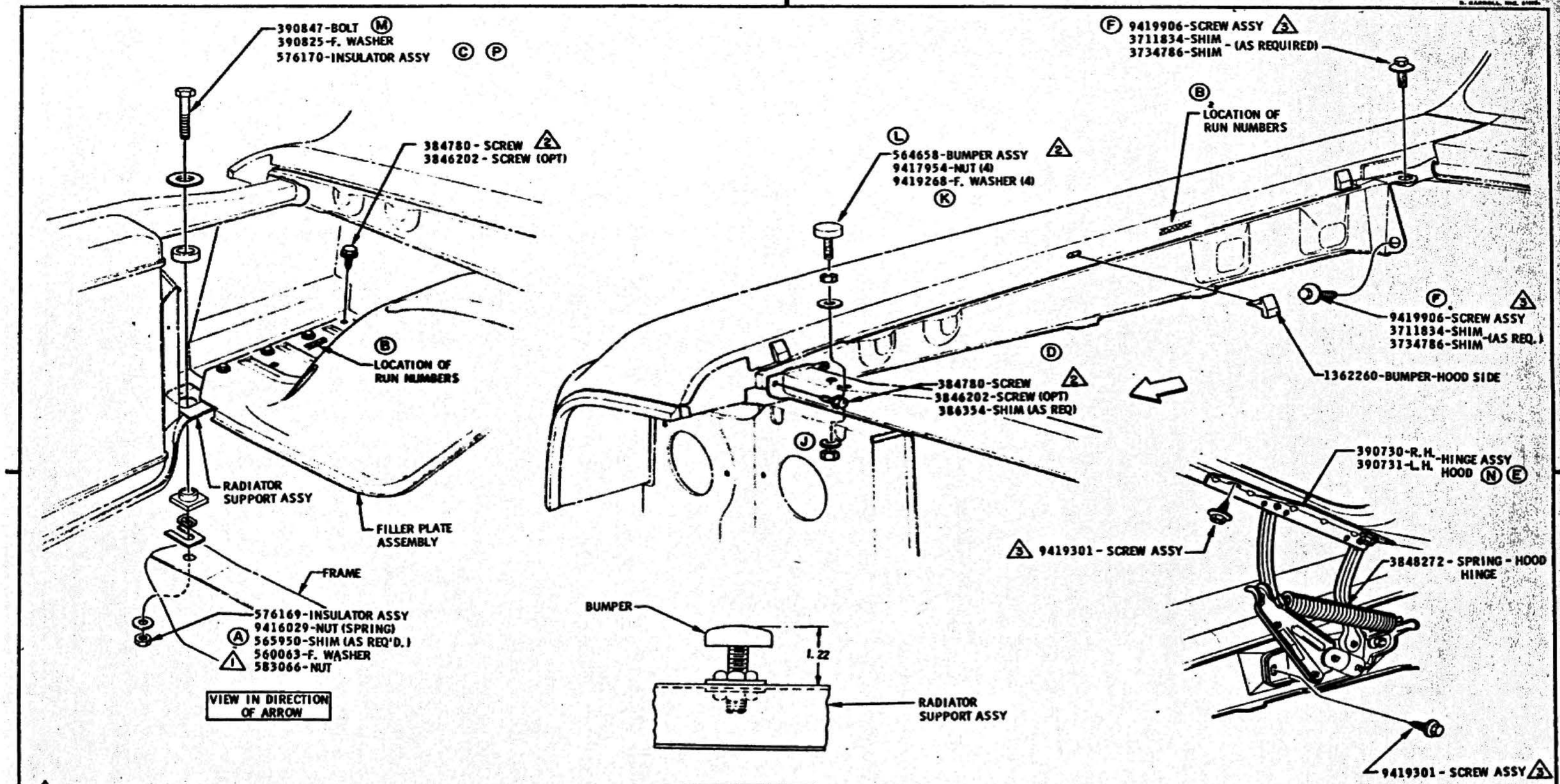

(3) 24-28 FT. LBS.
(2) 15-20 FT. LBS. (H)
(1) 30-38 FT. LBS.

DATE	SYM	REVISION	DR.	CK.	DATE	SYM	REVISION	DR.	CK.	DATE	SYM	REVISION	DR.	CK.
					8-18-64	K	BUMPER RELOCATED	BP	VP	3-17-64	E	WAS 3825827-B HINGE ASSY	BP	VP
1-15-65	P	3760886 WASH. REMOVED	BS	VP	5-28-64	J	WASHER & NUT ADDED	BP	VP	3-9-64	D	NUT & F. WASHER REMOVED	BP	VP
10-23-64	N	WAS 3878880-1 HINGE ASSY	JC	VP	5-18-64	H	TORQUE LBS ADDED	BP	VP	3-9-64	C	3760886 F. WASH ADDED	BP	VP
9-30-64	M	BOLT & WASHER NOS. REVISED	BP	VP	4-24-64	G	TORQUE SPECS ADDED	BP	VP	2-17-64	B	RUN NO. LOC. ADDED	BP	VP
9-30-64	L	WAS 1347890 BUMPER ASSY	BP	VP	4-24-64	F	WAS 3839741-SCR. ASSY	BP	VP	1-13-64	A	WAS 9418897-NUT	BP	VP

INSTALLATION — SHEET METAL

DATE DEC. 27, 1963 — FIRST USED 1965 — Oldsmobile GRAPHICS ILLUSTRATION — PAGE 11-2.7

DR. BY JOSEPH V. GALL — CHECKED H. VAN PELT — SERIES F85 — REF. 11A 11D 11E — PART NO. 387016

APPR. — APPR.

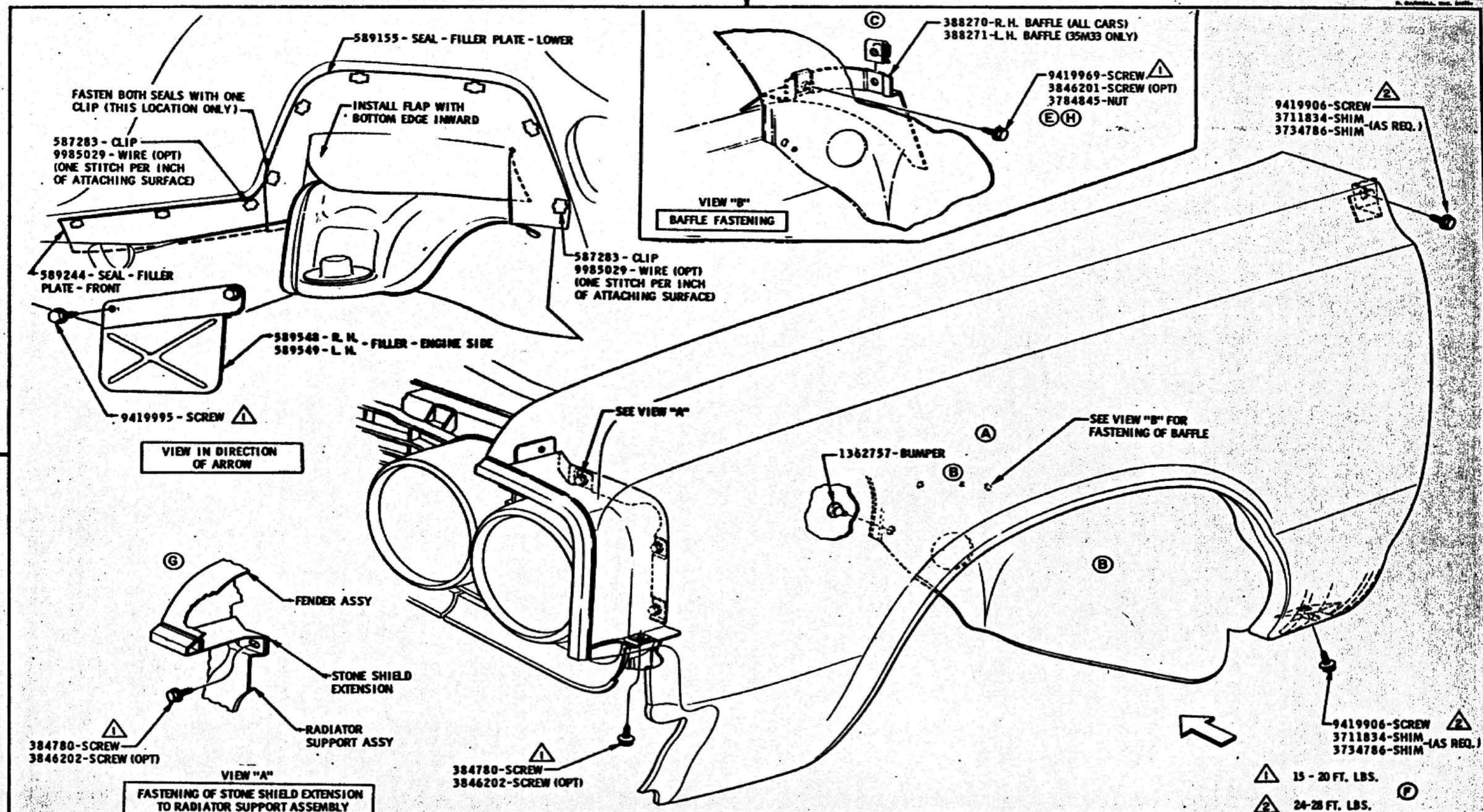

DATE	SYM	REVISION	DR.	CK.	DATE	SYM	REVISION	DR.	CK.	DATE	SYM	REVISION	DR.	CK.
										5-18-64	E	3784845-NUT ADDED		VP
										4-24-64	D	TORQUE SPEC'S ADDED		VP
					1-22-65	H	SCREW NUMBERS REVISED		VP	3-17-64	C	BAFFLE ADDED		VP
					8-27-64	G	FLANGE REPAIRED		VP	3-6-64	B	FASTENING REVISED		VP
					5-18-64	F	TORQUE LBS. ADDED		VP	2-17-64	A	3866540 SEAL CANCELLED		VP

INSTALLATION — SHEET METAL

DATE DEC. 27, 1963
DR. BY DAN TITUS
CHECKED H. VAN PELT
APPR.
APPR.

FIRST USED 1965
Oldsmobile DRAWING ILLUSTRATION
SERIES F85
REV. 11A 11E
PAGE 11-2.8
PART NO. 387016

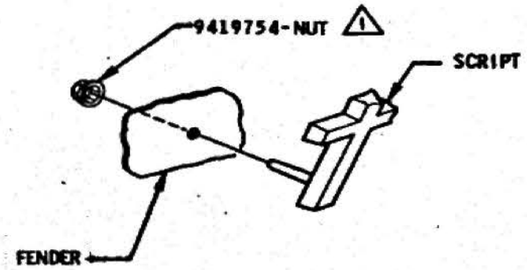

FIG. 4
TYPICAL SCRIPT FASTENINGS

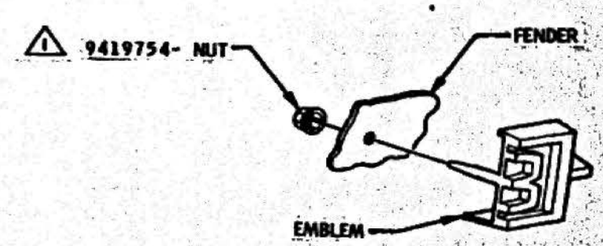

FIG. 5
TYPICAL EMBLEM FASTENING

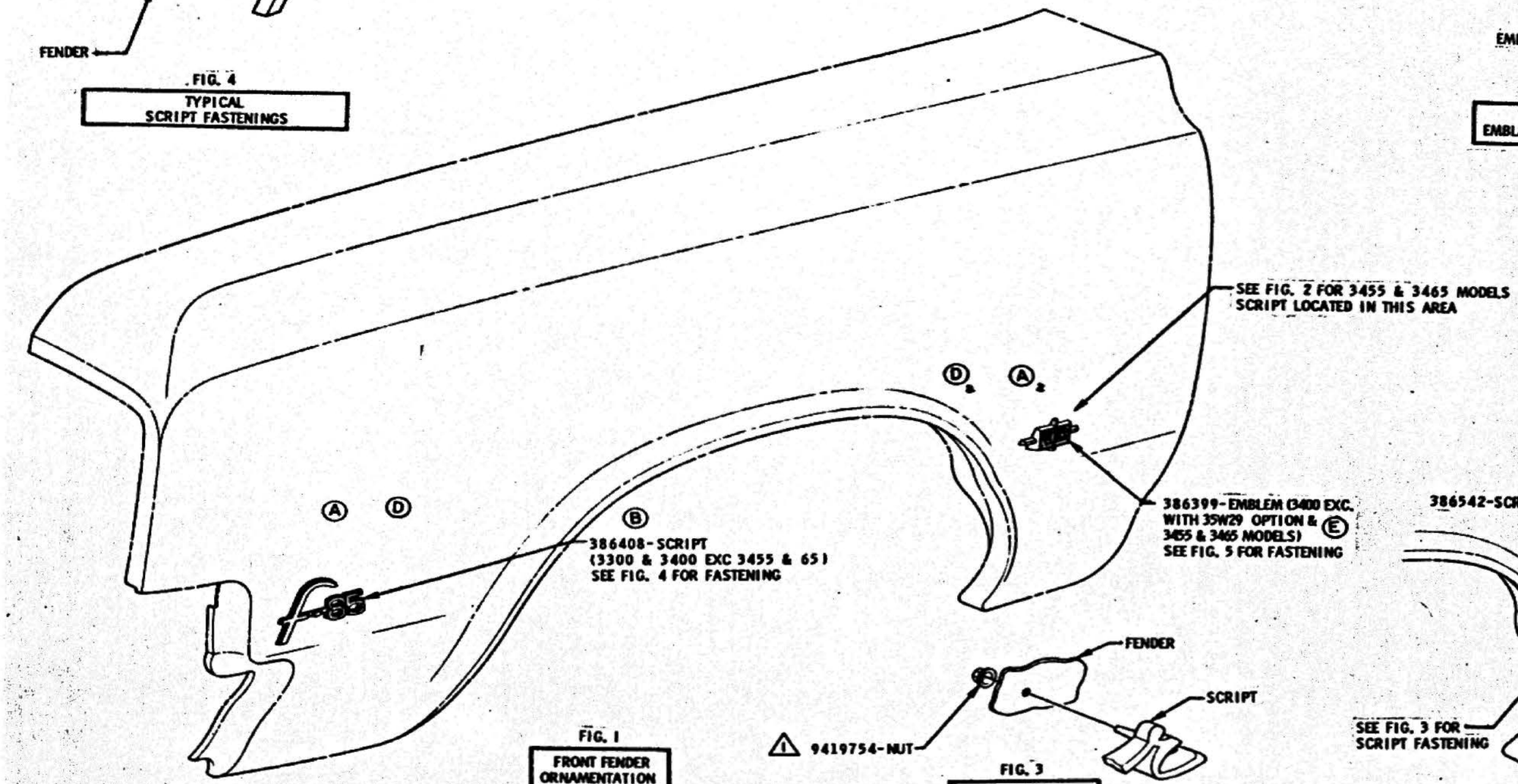

FIG. 1
FRONT FENDER ORNAMENTATION
FOR HOLE LOCATIONS SEE DWG. 386960-1

FIG. 3
TYPICAL SCRIPT FASTENING

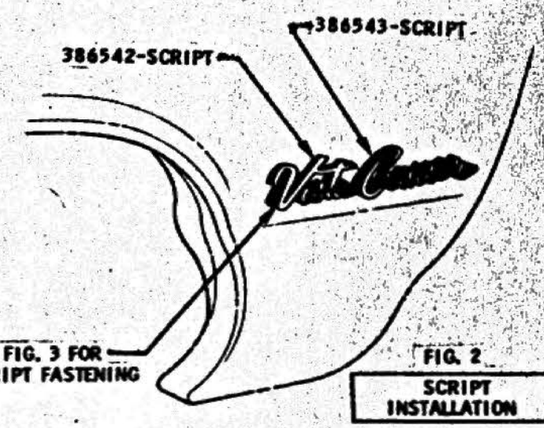

FIG. 2
SCRIPT INSTALLATION

MODEL USAGE: 33 & 3400

DATE	SYM	REVISION	DR.	CK.	DATE	SYM	REVISION	DR.	CK.	DATE	SYM	REVISION	DR.	CK.
										5-18-64	B₂	EMBLEM & SCRIPT REVERSED		
										5-18-64	C	TORQUE LBS. ADDED		
										4-4-64	B	NOTE REVISED		VP
					5-12-65	F	SEALER NOTE REMOVED	GC	VP	3-17-64	A₂	EMBLEM AND SCRIPT		
					6-9-64	E	WAS 35B09 OPTION.		VP			LOCATIONS REVERSED		VP

INSTALLATION	SHEET METAL		
DATE JAN. 20, 1964	FIRST USED 1965	Oldsmobile Graphic Illustration	PAGE 11-2.9
DR. BY JOSEPH V. GALL			
CHECKED H. VAN PELT	SERIES F-85	REF. 116	PART NO. 387016
APPR.			
APPR.			

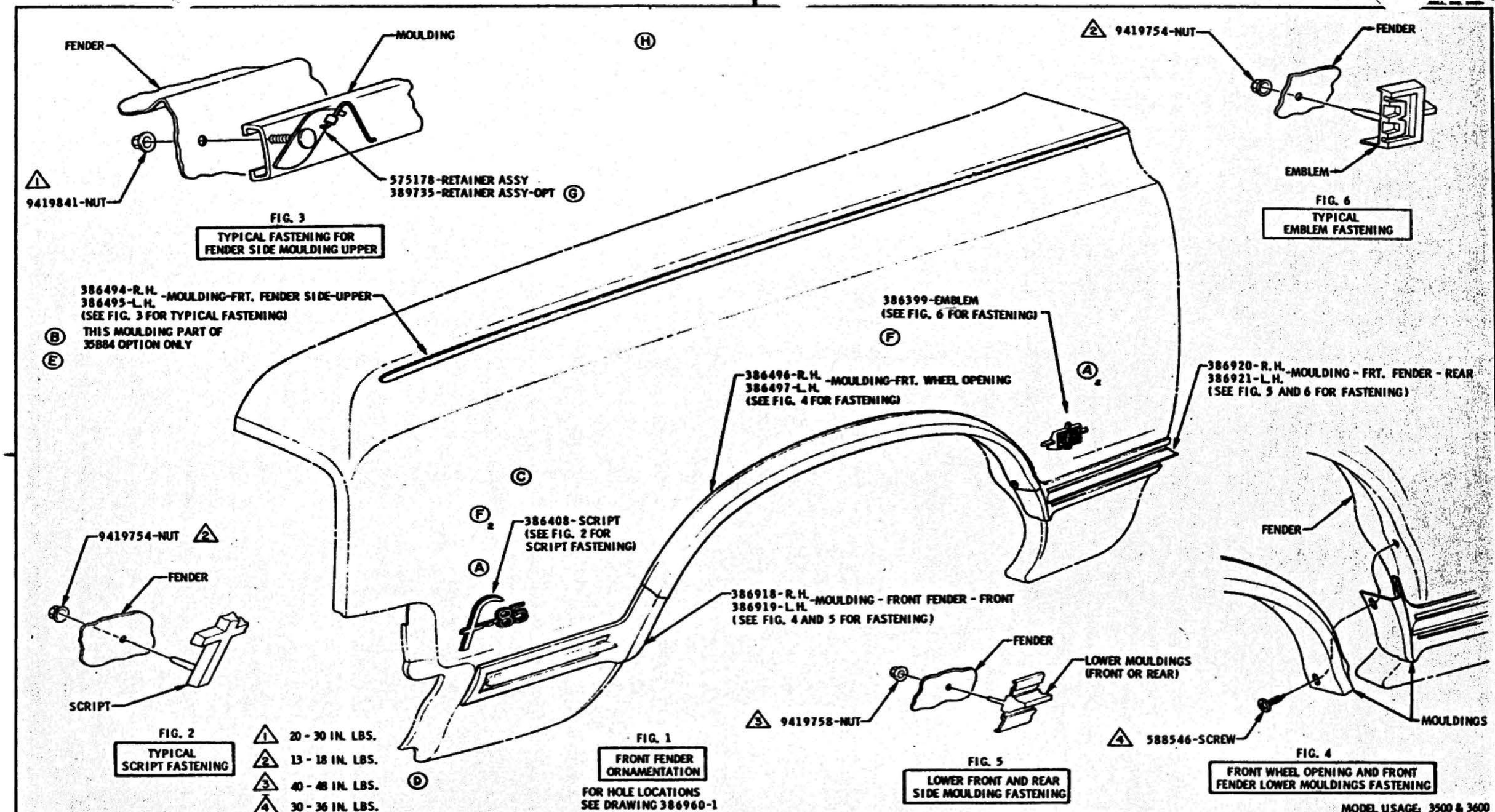

DATE	SYM	REVISION	DR.	CK.	DATE	SYM	REVISION	DR.	CK.	DATE	SYM	REVISION	DR.	CK.
					5-12-65	H	SEALER NOTE REMOVED	KS	VP	5-18-64	D	TORQUE LBS. ADDED	CB	VP
					6-30-64	G	FASTENINGS REVISED	BP	VP	4-4-64	C	NOTE REVISED	JG	VP
					6-18-64	F_2	EMBLEM AND SCRIPT LOCATIONS REVERSED			3-24-64	B	NOTE ADDED	JG	VP
								HG	VP	3-17-64	A_2	EMBLEM AND SCRIPT LOCATIONS REVERSED	JG	VP
					5-18-64	E	NOTE REVISED	HG	VP					

INSTALLATION: SHEET METAL
DATE: JAN. 20, 1964
DR. BY: JOSEPH V. GALL
CHECKED: H. VAN PELT
APPR.
APPR.
FIRST USED: 1965
Oldsmobile Service ILLUSTRATION
SERIES: F-85
REF.: 11 G
PAGE: 11-2.10
PART NO.: 387016

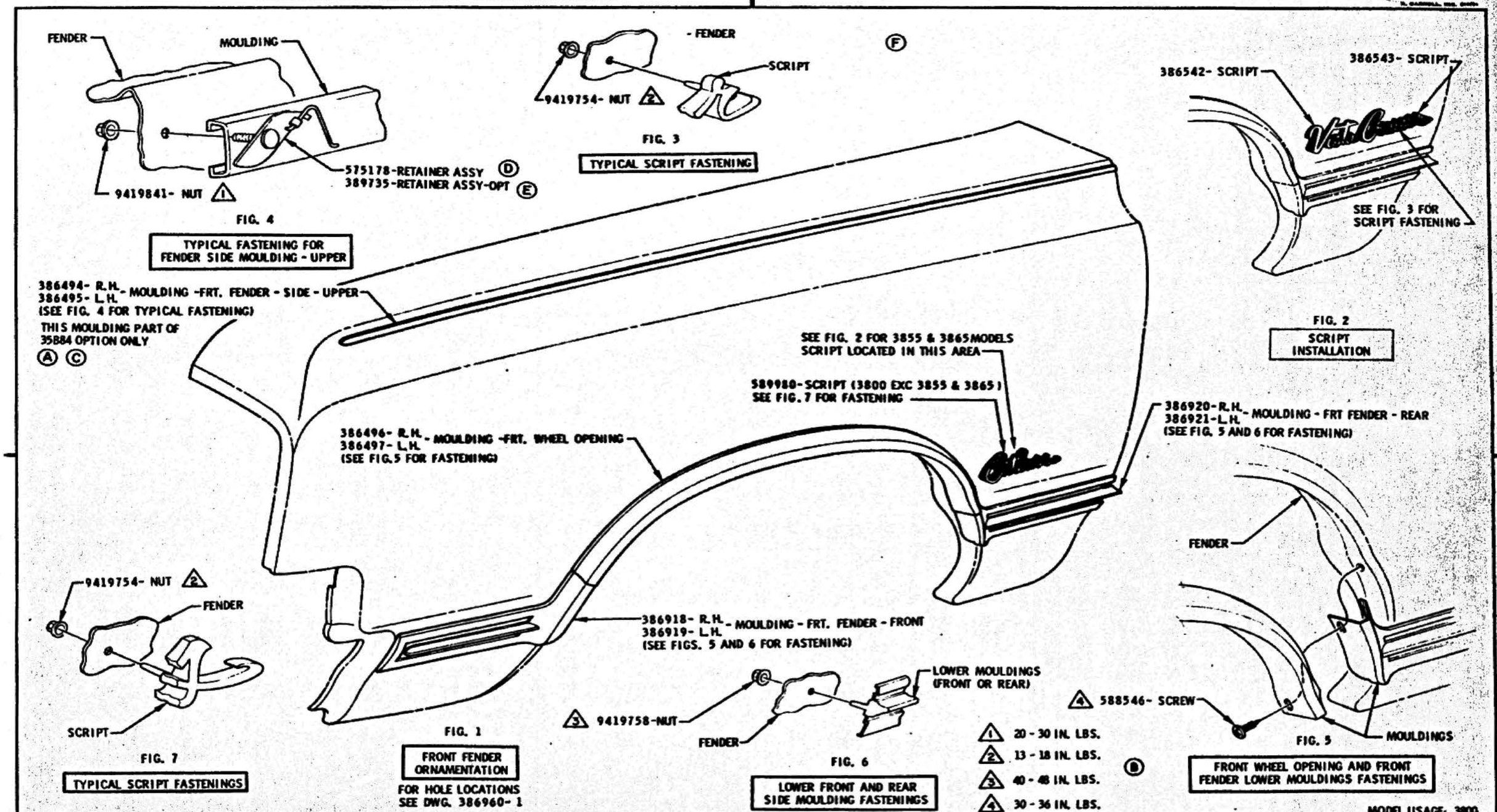

DATE	SYM	REVISION	DR.	CK.	DATE	SYM	REVISION	DR.	CK.	DATE	SYM	REVISION	DR.	CK.
										6-30-64	E	OPT. RETAINER ADDED	BA	VD
										6-26-64	D	WAS 841697-ASSY	BA	VD
										5-18-64	C	NOTE REVISED	MD	VD
										5-18-64	B	TORQUE LBS. ADDED	GB	VD
					5-12-65	F	SEALER NOTE REMOVED	GC	VD	3-24-64	A	NOTE ADDED	GL	VD

INSTALLATION	SHEET METAL		
DATE JAN. 20, 1964	FIRST USED 1965	Oldsmobile alpine ILLUSTRATION	PAGE 11-2.11
DR. BY JOSEPH V. GALL	SERIES F-85	REF. 116	PART NO. 387016
CHECKED H. VAN PELT			
APPR.			
APPR.			

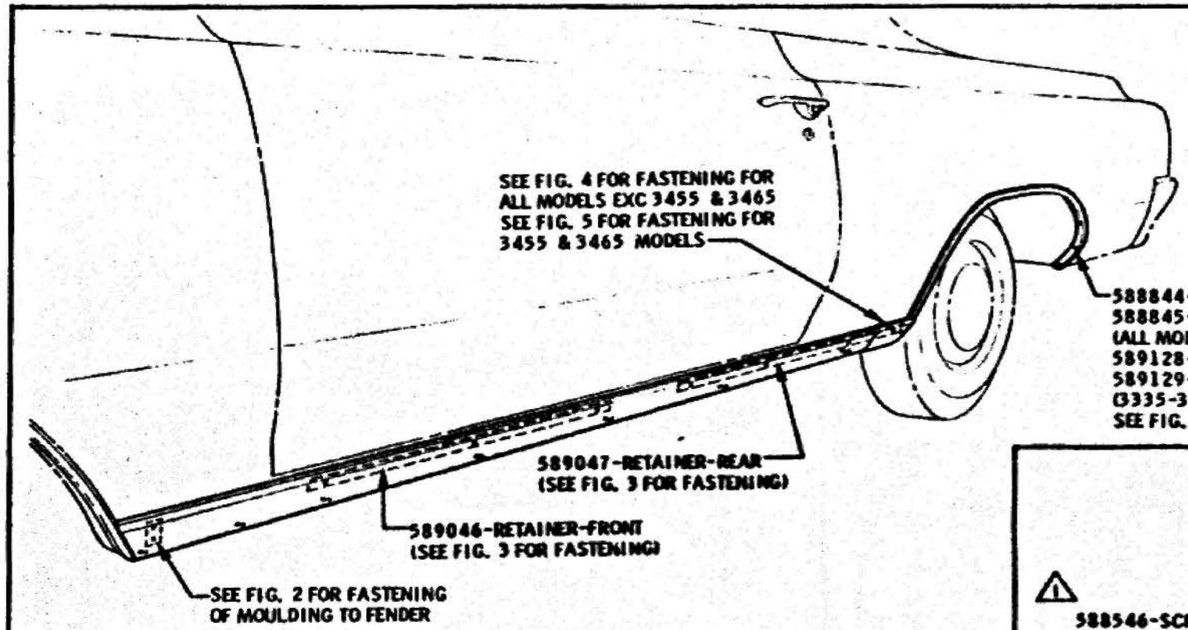

FIG. 1

INSTALLATION OF ROCKER PANEL AND REAR WHEEL OPENING MOULDINGS

CHART

588902-R.H. MOULDING - ROCKER PANEL
588903-L.H. MOULDING - ROCKER PANEL
(ALL MODELS EXC 3455 & 3465)
588904-R.H. MOULDING - ROCKER PANEL
588905-L.H. MOULDING - ROCKER PANEL
(3455 & 3465 MODELS)

589166-R.H. MOULDING - ROCKER PANEL EXTENSION
589167-L.H. MOULDING - ROCKER PANEL EXTENSION

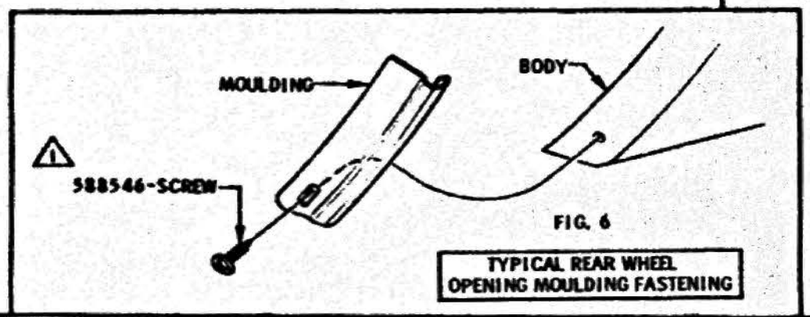

FIG. 6

TYPICAL REAR WHEEL OPENING MOULDING FASTENING

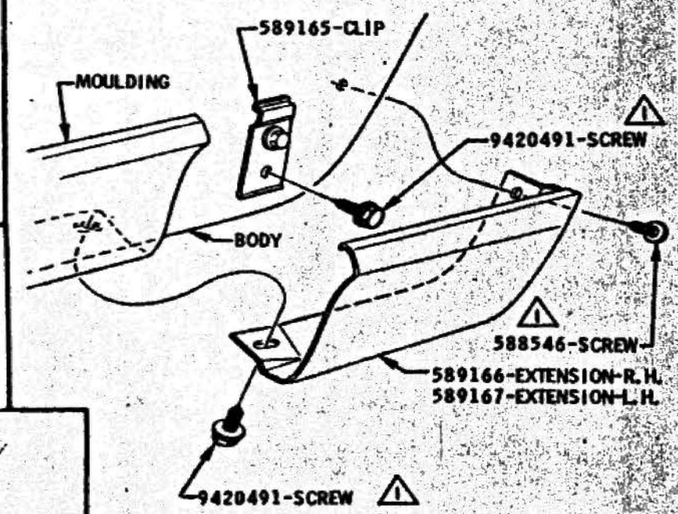

FIG. 5

EXTENSION INSTALLATION FOR 3455 AND 3465 MODELS

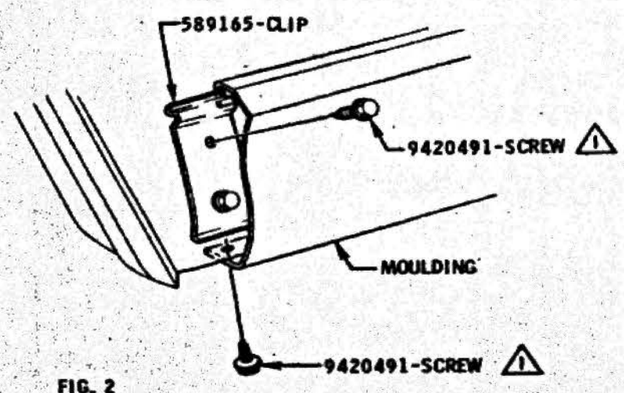

FIG. 2

INSTALLATION OF ROCKER PANEL TO FRONT FENDER (ALL MODELS)

30 - 36 IN. LBS. (A)

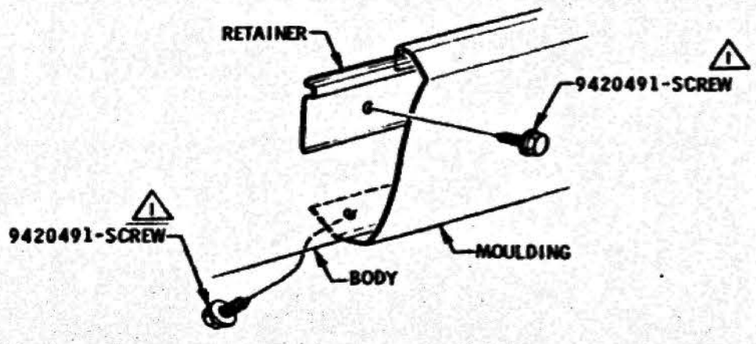

FIG. 3

TYPICAL INSTALLATION OF RETAINERS AND MOULDING TO BODY (EXCEPT AS SHOWN)

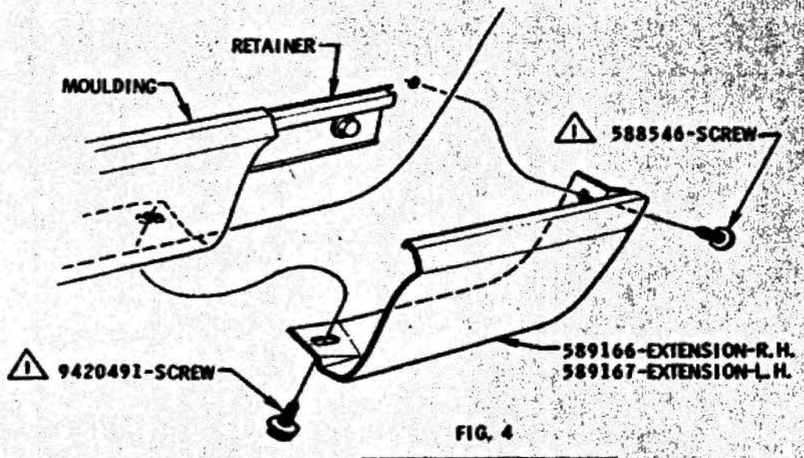

FIG. 4

EXTENSION INSTALLATION FOR ALL MODELS EXCEPT 3455 & 3465

FOR 3300 AND 3400 MODELS WITH 35Y68 OPTION

DATE	SYM	REVISION	DR	CK	DATE	SYM	REVISION	DR	CK	DATE	SYM	REVISION	DR	CK
										5-18-64	A	TORQUE LBS. ADDED	GB	VP

INSTALLATION SHEET METAL
DATE MAR. 17, 1964
DR. BY JOE GALL
CHECKED H. VAN PELT
APPR.

FIRST USED 1965 | Oldsmobile GRAPHIC ILLUSTRATION | PAGE 11-2.12
SERIES F-85 | REF. 95YGA | PART NO. 387016

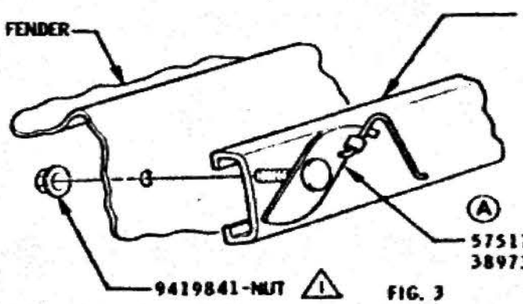

FIG. 3

TYPICAL FASTENING FOR FENDER SIDE MOULDING UPPER

386494-R.H.
386495-L.H.
MOULDING-FRT. FENDER SIDE-UPPER
(SEE FIG. 3 FOR TYPICAL FASTENING)
Ⓒ THIS MOULDING PART OF 35B84 OPTION ONLY

588842-R.H.
588843-L.H.
MOULDING-FRONT FENDER WHEEL OPENING
(SEE FIG. 2 FOR TYPICAL FASTENING)
Ⓒ THIS MOULDING PART OF 35Y68 OPTION ONLY

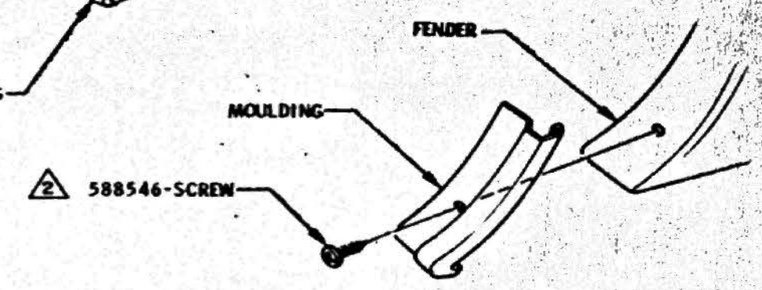

FIG. 2

TYPICAL FRONT WHEEL OPENING MOULDING FASTENING

Ⓒ FOR 3300 AND 3400 MODELS WITH 35B84 & 35Y68 OPTIONS

Ⓑ △1 20 - 30 IN. LBS.
△2 30 - 36 IN. LBS.

DATE	SYM	REVISION	DR.	CK.	DATE	SYM	REVISION	DR.	CK.	DATE	SYM	REVISION	DR.	CK.
										6-30-64	D	OPT. RETAINER ADDED		VP
										5-18-64	C	NOTES REVISED		VP
										5-18-64	B	TORQUE LBS. ADDED		VP
										4-24-64	A	WAS 541697-BOLT ASSY		VP

INSTALLATION: SHEET METAL
DATE: MAR. 17, 1964
DR. BY: JOSEPH K. GALL
CHECKED: H. VAN PELT
APPR.
APPR.

FIRST USED: 1965
Oldsmobile GRAPHIC ILLUSTRATION
SERIES: F 85
USE: 35B84 35Y68
PAGE: 11-2.13
PART NO. 387016

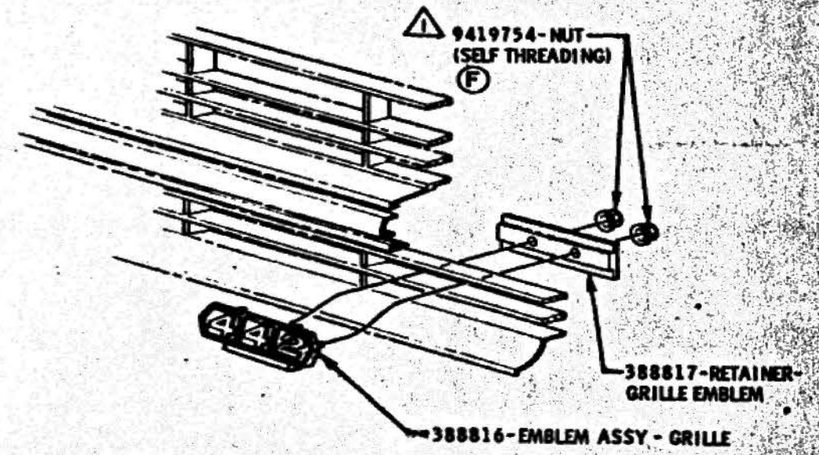

VIEW "A"

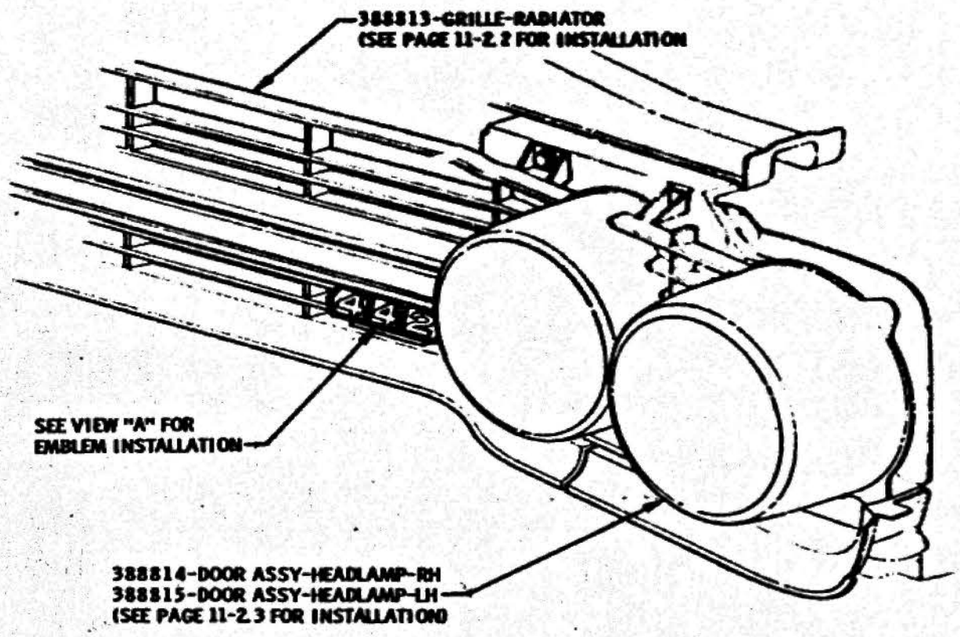

INSTALLATION OF GRILLE AND HEADLAMP DOORS

(C)
(B)

1 13 - 18 IN. LBS. (D)

(E) FOR 3400-3600-3800 MODELS (EXC. STATION WAGONS) WITH 35W29 OPTION

DATE	SYM	REVISION	DR.	CK.	DATE	SYM	REVISION	DR.	CK.	DATE	SYM	REVISION	DR.	CK.
										6-9-64	E	WAS 35B09 OPTION		VP
										5-18-64	D	TORQUE LBS. ADDED		VP
										5-4-64	C	REVISED & REDRAWN		VP
					7-15-64	G	DRAWING REVISED		VP	4-4-64	B	WAS 9422719-NUT		VP
					7-9-64	F	WAS 9422719-NUT		VP	3-24-64	A	WERE REMOVED		VP

INSTALLATION — SHEET METAL

DATE MAR. 17, 1964
DR. BY JOSEPH V. ZITZ
CHECKED H. VAN PELT
APPR.
APPR.

FIRST USED 1965

Oldsmobile GRAPHIC ILLUSTRATION

DESIGNED F-85 REF. 35W29

PAGE 11-2.14

PART NO. 387016

OLDSMOBILE DIVISION GENERAL MOTORS CORPORATION LANSING 21, MICHIGAN

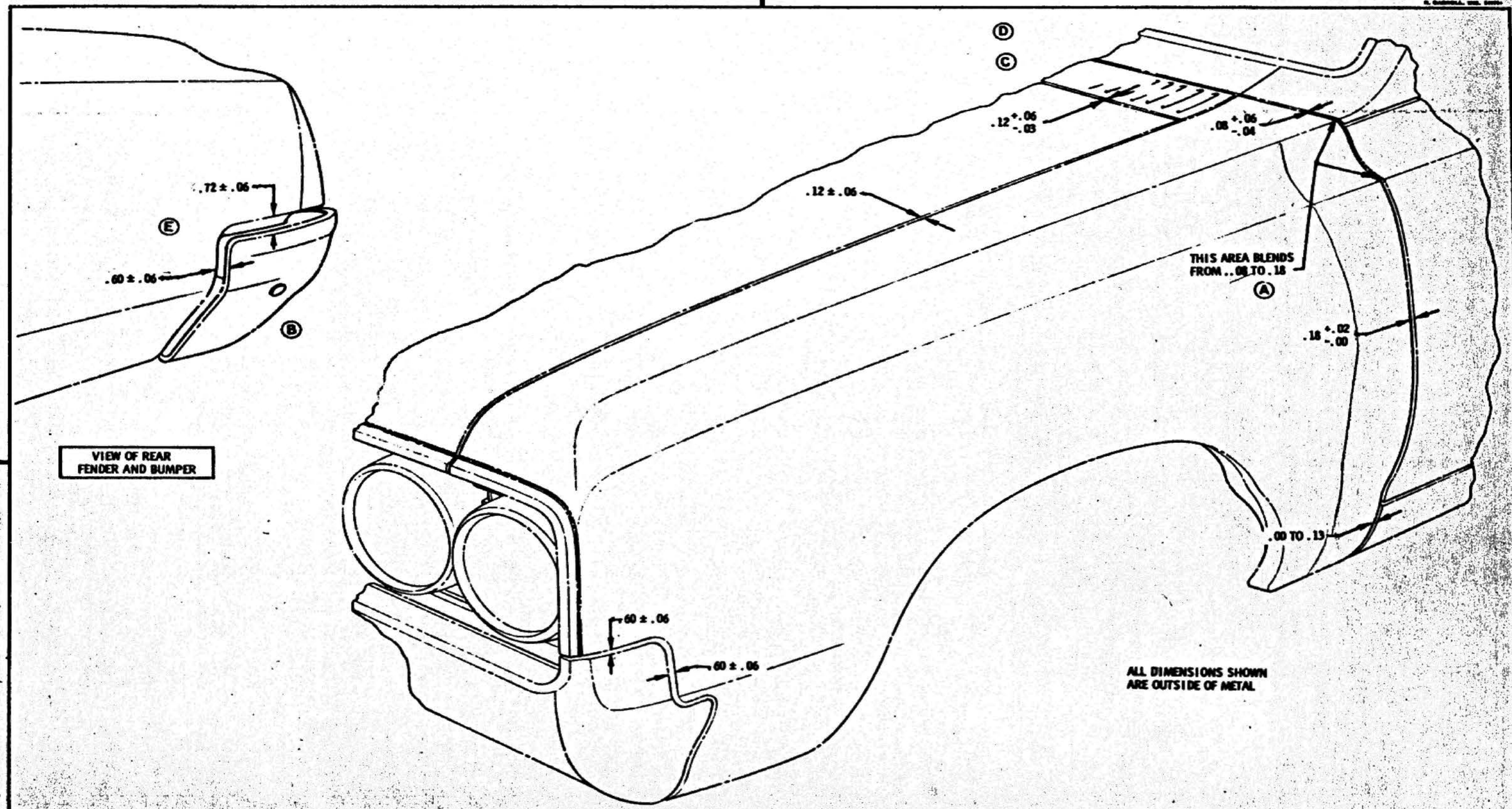

DATE	SYM	REVISION	DR.	CK.	DATE	SYM	REVISION	DR.	CK.	DATE	SYM	REVISION	DR.	CK.
										1-8-64	E	TOLERANCES ADDED	JC	JP
										9-25-64	D	CLEARANCE NOTE REVISED	GB	VP
										9-2-64	C	NOTE ADDED	RB	VP
										9-2-64	B	VIEW ADDED	RB	VP
										2-21-64	A	DIMENSIONS REVISED	GB	VP

INSTALLATION **SHEET METAL CLEARANCES**

DATE FEB. 6, 1964
DR. BY JOSEPH H. GALL
CHECKED H. VAN PELT
APPR.
APPR.

FIRST USED 1965

Oldsmobile Styling ILLUSTRATION

PAGE 11-3.1

REVISION F85

REF. 11A

PART NO. 387718

OLDSMOBILE DIVISION GENERAL MOTORS CORPORATION LANSING 21, MICHIGAN

386960-R.H.
386961-L.H. -FENDER ASSY (AFTER PIERCING)

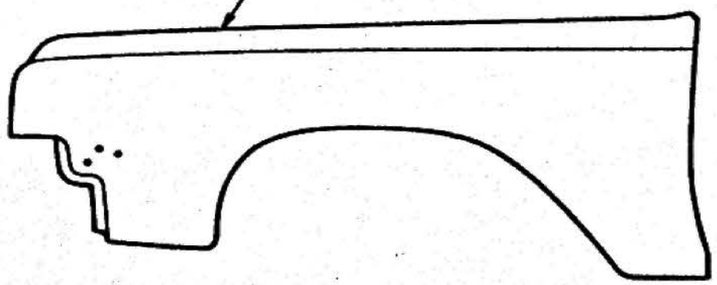

3300

388882-R.H.
388883-L.H. -FENDER ASSY (AFTER PIERCING)

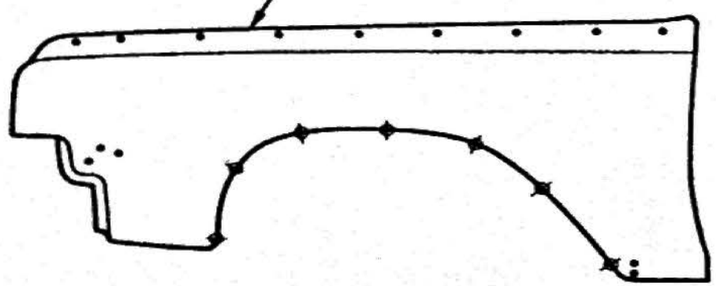

3300 WITH 35B84 & Y68

387426-R.H.
387427-L.H. -FENDER ASSY (AFTER PIERCING)

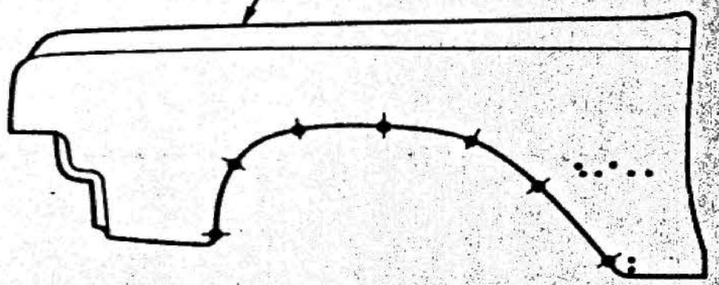

3455 - 3465 WITH 35Y68

388880-R.H.
388881-L.H. -FENDER ASSY (AFTER PIERCING)

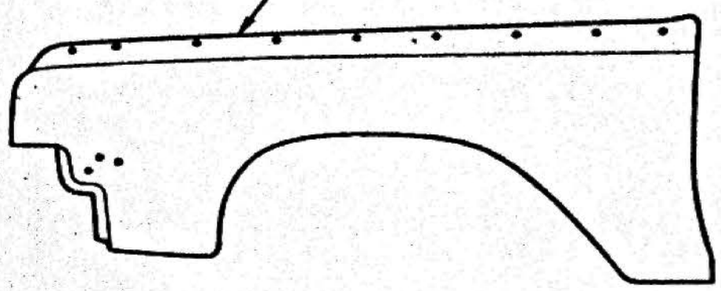

3300 WITH 35B84

386966-R.H.
386967-L.H. -FENDER ASSY (AFTER PIERCING)

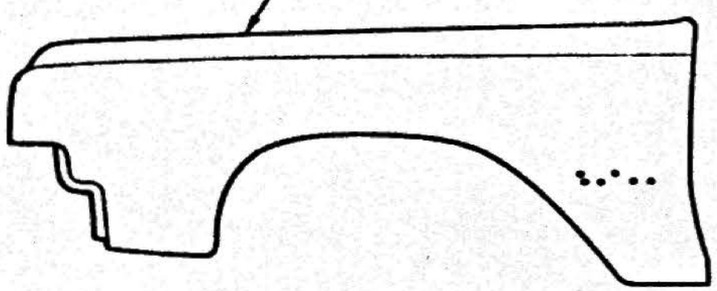

3455 - 3465

388886-R.H.
388887-L.H. -FENDER ASSY (AFTER PIERCING)

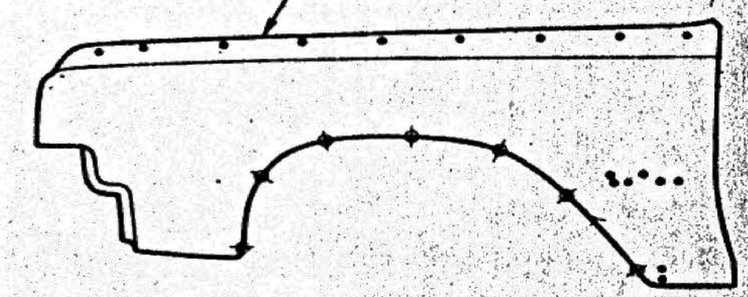

3455 - 3465 WITH 35B84 & Y68

386962-R.H.
386963-L.H. -FENDER ASSY (AFTER PIERCING)

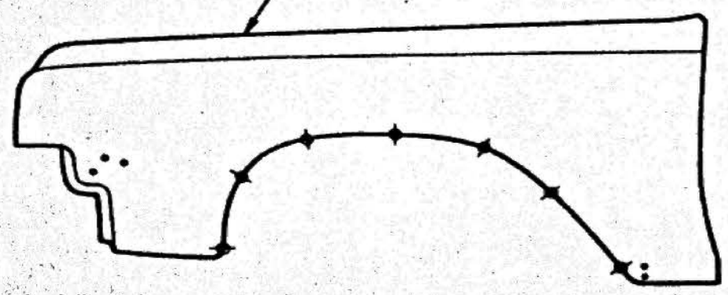

3300 WITH 35Y68

388884-R.H.
388885-L.H. -FENDER ASSY (AFTER PIERCING)

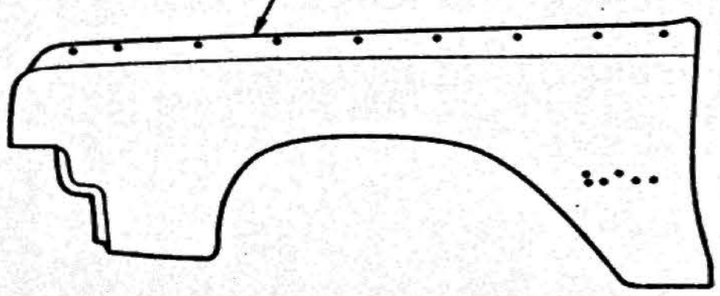

3455 - 3465 WITH 35B84

FOR HOLE SIZES AND HOLE LOCATIONS
SEE DRAWING 386960-1

L.H. SHOWN
3300 SERIES AND 3455 & 3465 MODELS

DATE	SYM	REVISION	DR.	CK.	DATE	SYM	REVISION	DR.	CK.	DATE	SYM	REVISION	DR.	CK.
										7-21-64	C	PART NO'S & PIERCING REVISED	VP	
										6-9-64	B2	WAS 35B09 OPTION	VP	
										5-14-64	A	MODEL USUAGE AND		
												PIERCING REVISED	VP	

DATE APRIL 2, 1964
DR. BY JOE U GALL
CHECKED H. VAN PELT
APPR.
APPR.

CHART - FENDER IDENTIFICATION

FIRST USED 1965

Oldsmobile GRAPHIC ILLUSTRATION

SERIES F-85

REF. 11A 35B09 35Y68

PAGE 11-4.1

PART NO. 387403

OLDSMOBILE DIVISION GENERAL MOTORS CORPORATION LANSING 21, MICHIGAN

389640-R.H.
389641-L.H. -FENDER ASSY (AFTER PIERCING)

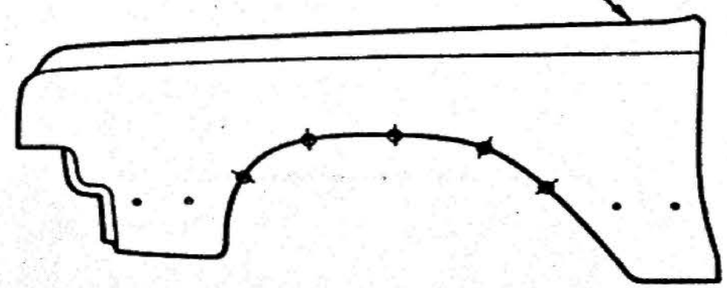

3827 - 3837 - 3867 WITH 35W29

Ⓐ

388574-R.H.
388575-L.H. -FENDER ASSY (AFTER PIERCING)

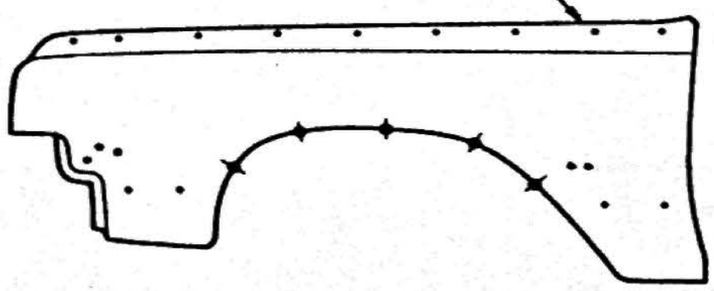

3600 WITH 35B84

386972-R.H.
386973-L.H. -FENDER ASSY (AFTER PIERCING)

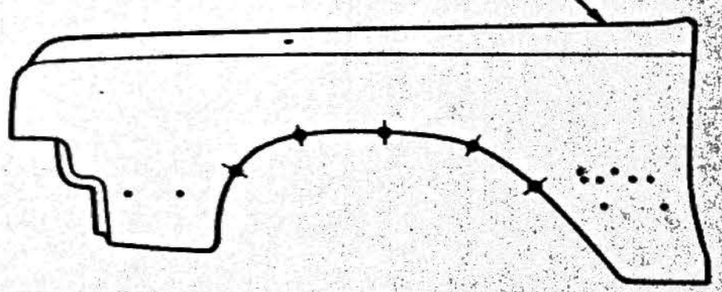

3855 - 3865

389642-R.H.
389643-L.H. -FENDER ASSY (AFTER PIERCING)

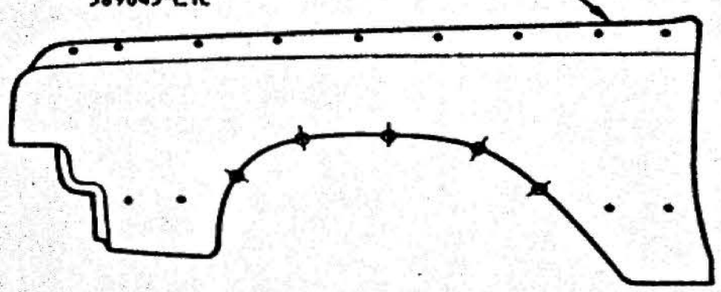

3827 - 3837 - 3867 WITH 35W29 & B84

$Ⓐ_2$

386974-R.H.
386975-L.H. -FENDER ASSY (AFTER PIERCING)

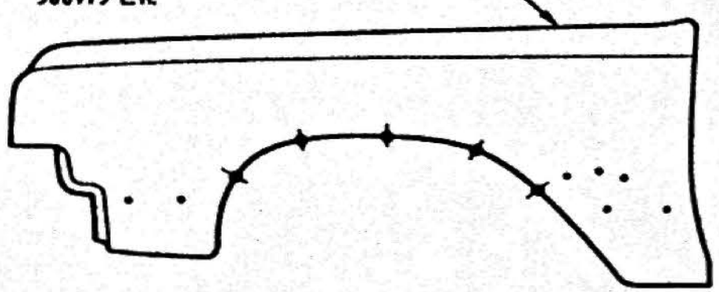

3827 - 3837 - 3867

388578 -R.H.
388579 -L.H. -FENDER ASSY (AFTER PIERCING)

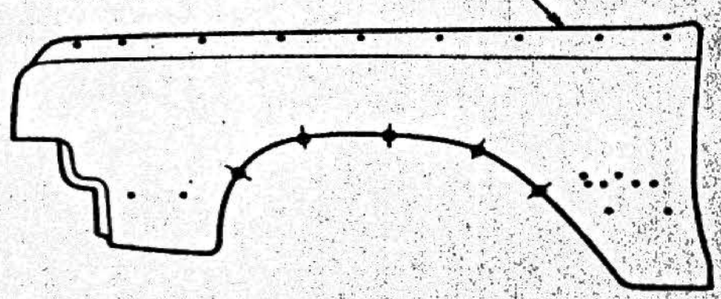

3855 - 3865 WITH 35B84

386970-R.H.
386971-L.H. -FENDER ASSY (AFTER PIERCING)

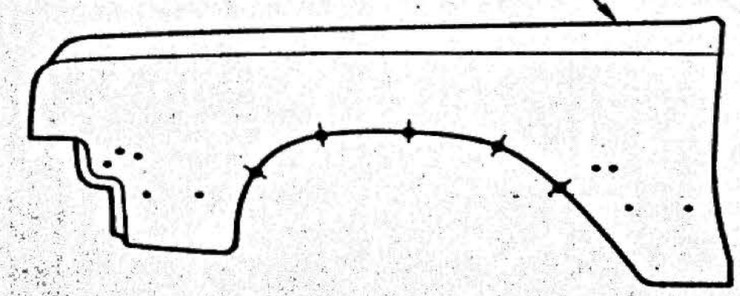

3600

388576 -R.H.
388577 -L.H. -FENDER ASSY (AFTER PIERCING)

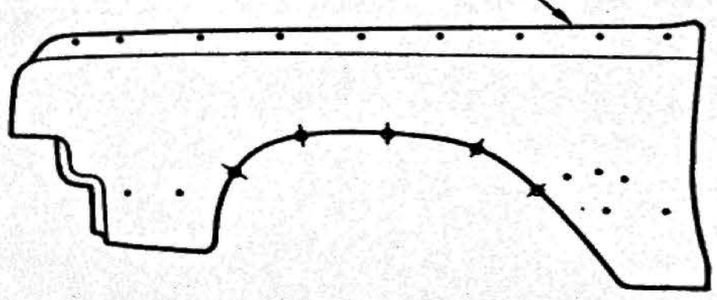

3827 - 3837 - 3867 WITH 35B84

FOR HOLE SIZES AND HOLE LOCATIONS
SEE DRAWING 386960-1

L.H. SHOWN

3600 - 3800 SERIES

DATE	SYM	REVISION	DR.	CK.	DATE	SYM	REVISION	DR.	CK.	DATE	SYM	REVISION	DR.	CK.
										7-21-64	A₂	VIEWS REVISED	JRC	VD

CHART - FENDER IDENTIFICATION

DATE MAY 14, 1964
DR. BY JOE V. GALL
CHECKED H. VAN PELT
APPR.
APPR.

FIRST USED 1965

Oldsmobile GRAPHIC ILLUSTRATION

SERIES F-85

REF. 11A 35Y68

PAGE 11-4.3

PART NO. 387403

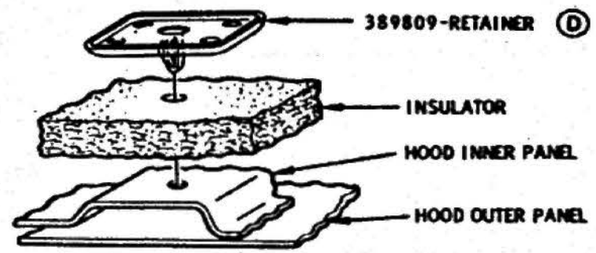

VIEW "A"
(35-36-3800 SERIES)

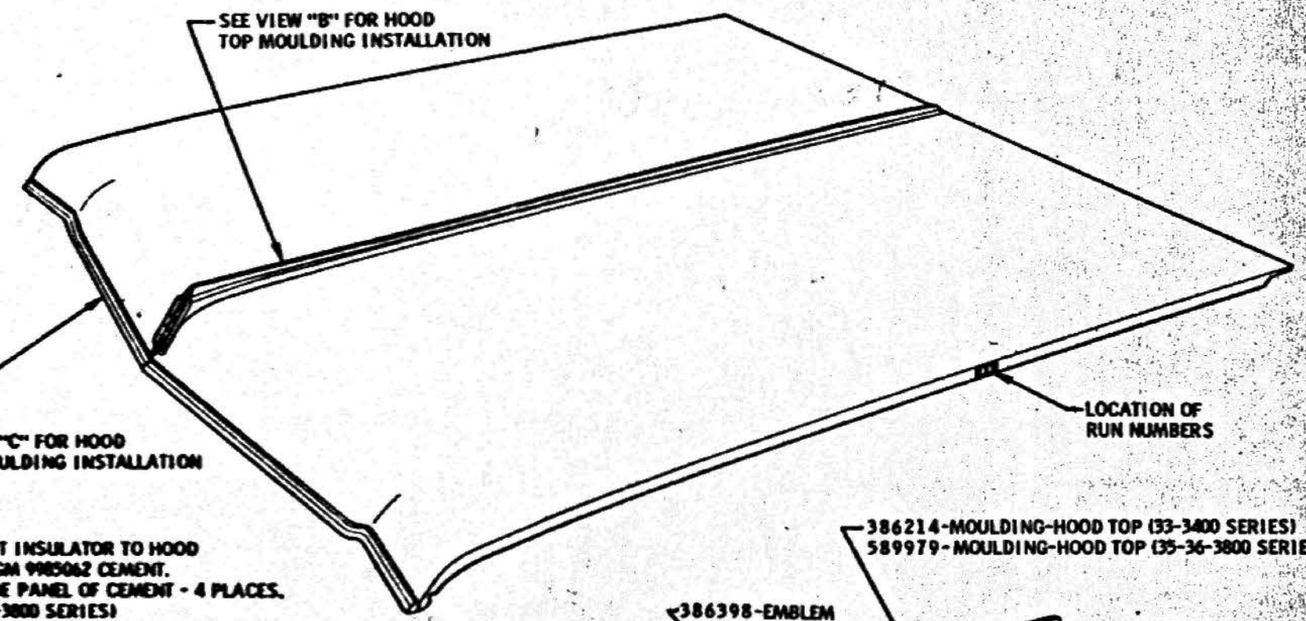

HOOD ORNAMENTATION

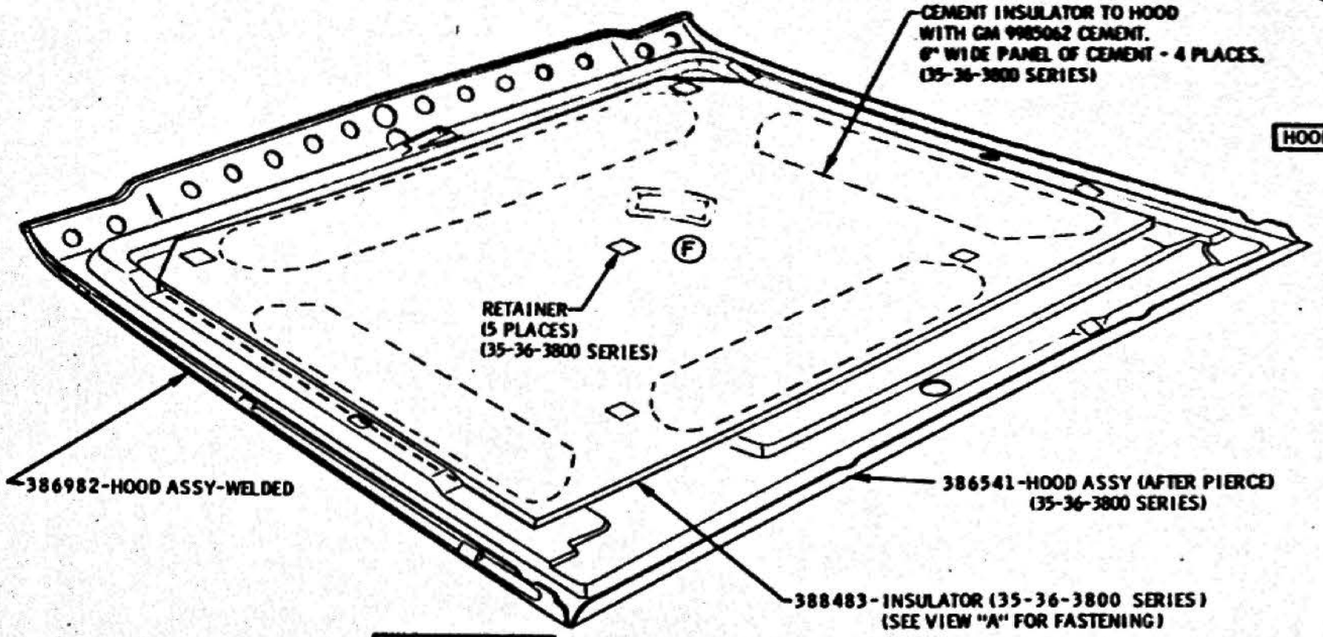

HOOD INSULATOR INSTALLATION

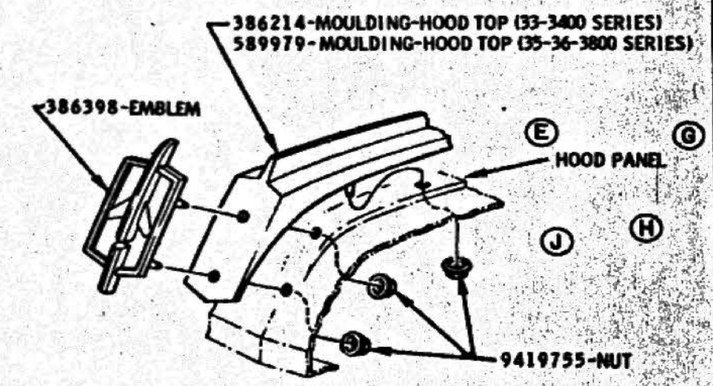

VIEW "B"

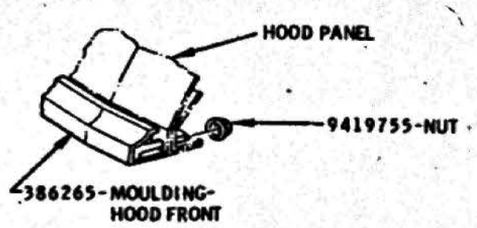

VIEW "C"

FOR LAYOUT, SEE DWG. BE-33003

386688-HOOD ASSY-COMPLETE-33-3400 SERIES
386689-HOOD ASSY-COMPLETE-35-36-3800 SERIES

DATE	SYM	REVISION	DR.	CK.	DATE	SYM	REVISION	DR.	CK.	DATE	SYM	REVISION	DR.	CK.
										8-14-64	G	WAS 389869-SHIM	BA	DF
										7-28-64	F	DEPRESSION ADDED	BA	VP
										7-10-64	E	389869-SHIM ADDED	BA	VP
					12-28-64	J	WASHERS REMOVED	""	VP	7-10-64	D	WAS 589427-RETAINER	BA	VP
					8-27-64	H	WASHERS RELOCATED	BA	VP	5-4-64	C	REVISED & PROGRAM PICTURE	BA	VP

HOOD ASSEMBLY-COMPLETE			
DATE OCT. 29, 1962	FIRST USED 1965	Oldsmobile GRAPHIC ILLUSTRATION	PAGE 11-5.1
DR. BY MOENRING			
CHECKED E. BUGLER	SERIES F-85	REF. 110	PART NO. 386689
APPR.			
APPR.			

ELECTRICAL

DRAWING NO.	DRAWING NAME	PAGE NO.
386457	FUSE PANEL	12 - 2.1
386799	ELECTRICAL	12 - 3.1
		12 - 4.1
387005	SPEEDOMETER CABLE	12 - 5.1
387571	TAILGATE WINDOW SWITCH	12 - 6.1
-----	SCHEMATIC WIRING CHART	12 - 7.1
		12 - 8.1
386595	GLOVE BOX LAMP	12 - 9.1
386594	COURTESY LAMPS	12 - 10.1
386596	PARKING BRAKE LAMP	12 - 11.1
387347	BACK-UP LAMPS	12 - 12.1
387294	TRUNK LAMP	12 - 13.1
387569	ASH TRAY LAMP	12 - 14.1

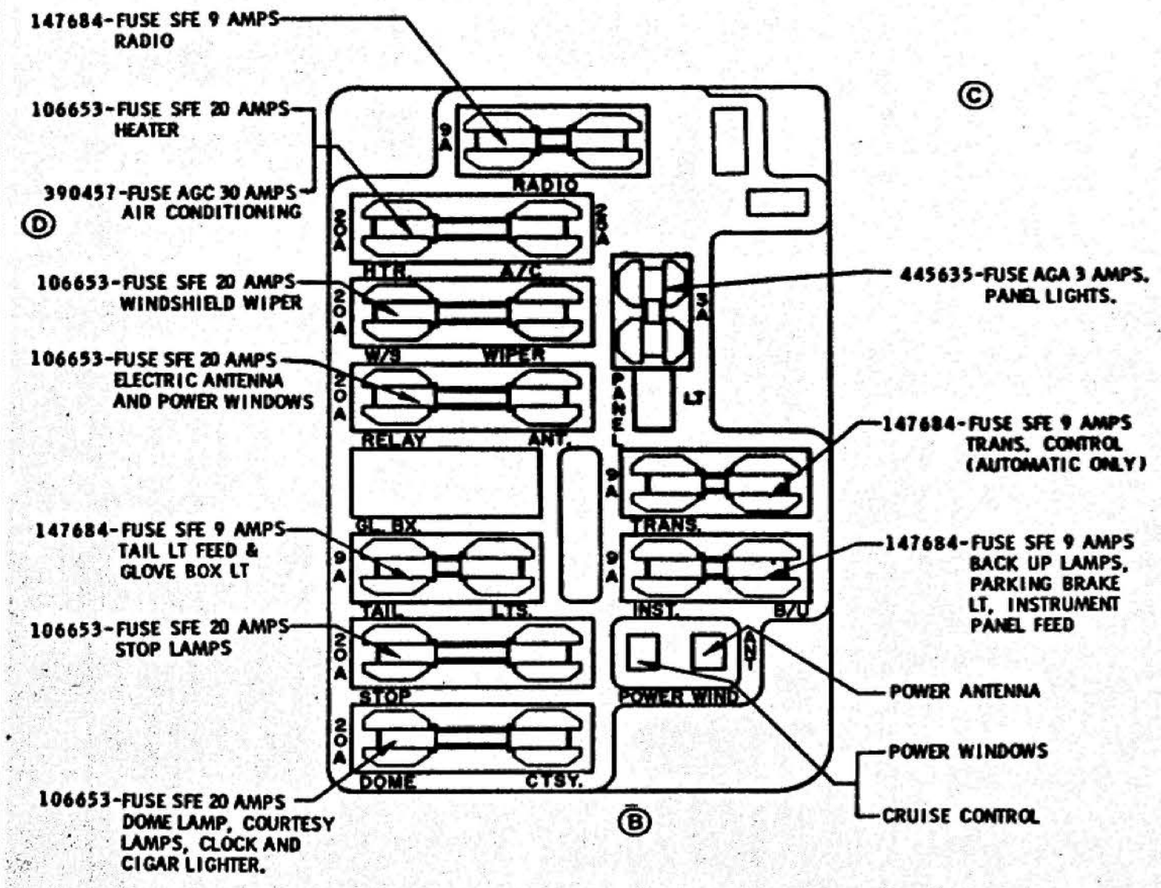

FUSE PANEL

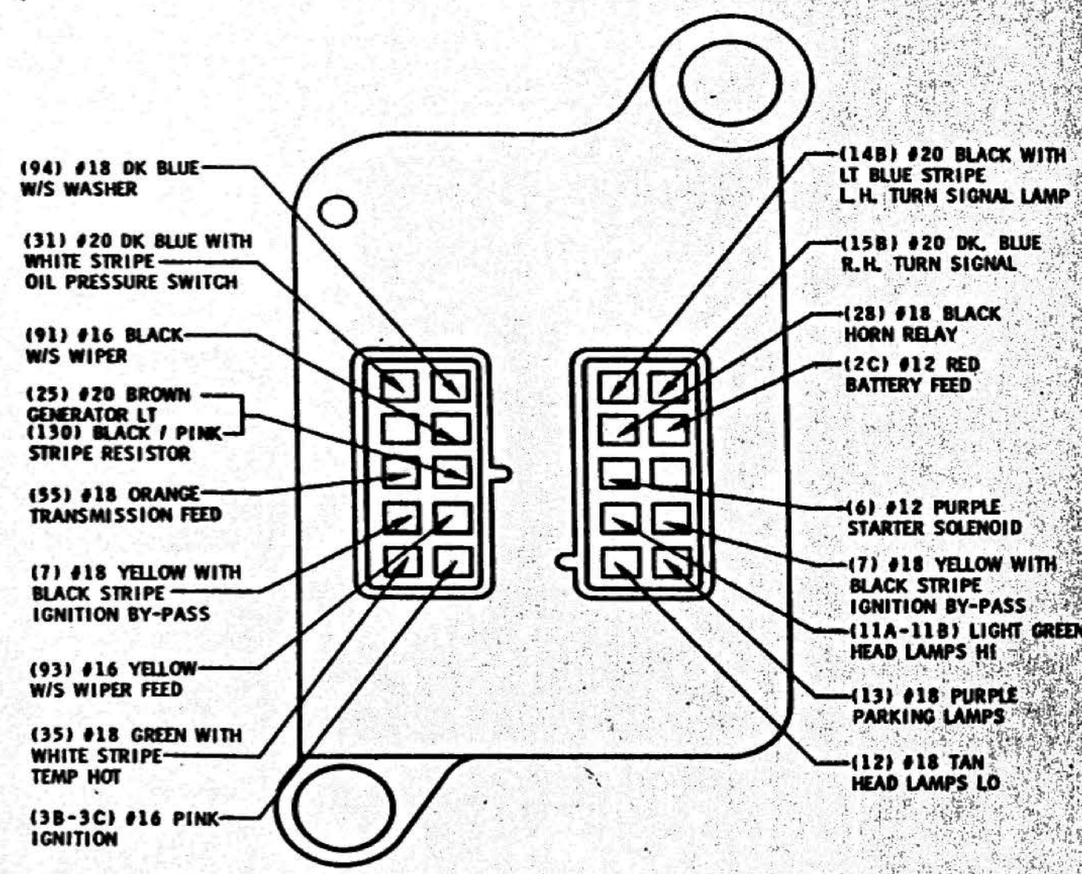

DASH DISCONNECT

DATE	SYM	REVISION	DR.	CK.	DATE	SYM	REVISION	DR.	CK.	DATE	SYM	REVISION	DR.	CK.
										3-9-64	D	WAS 455844 FUSE 25 AMP	BA	VP
										3-28-64	C	FLASHER NO'S REMOVED	BA	VP
										12-11-63	B	REVISED TO PART	BA	VP
										11-22-63	A	FUSE PANEL REV.	CM	VP

CHART				
DATE NOV. 6, 1963	FIRST USED 1965	Oldsmobile Service ILLUSTRATION		PAGE 12-2.1
DR. BY C. E. MAY				
CHECKED H. VAN PELT	SERIES F85		REV. 12	PART NO. 386457
APPR.				
APPR.				

FUSE PANEL

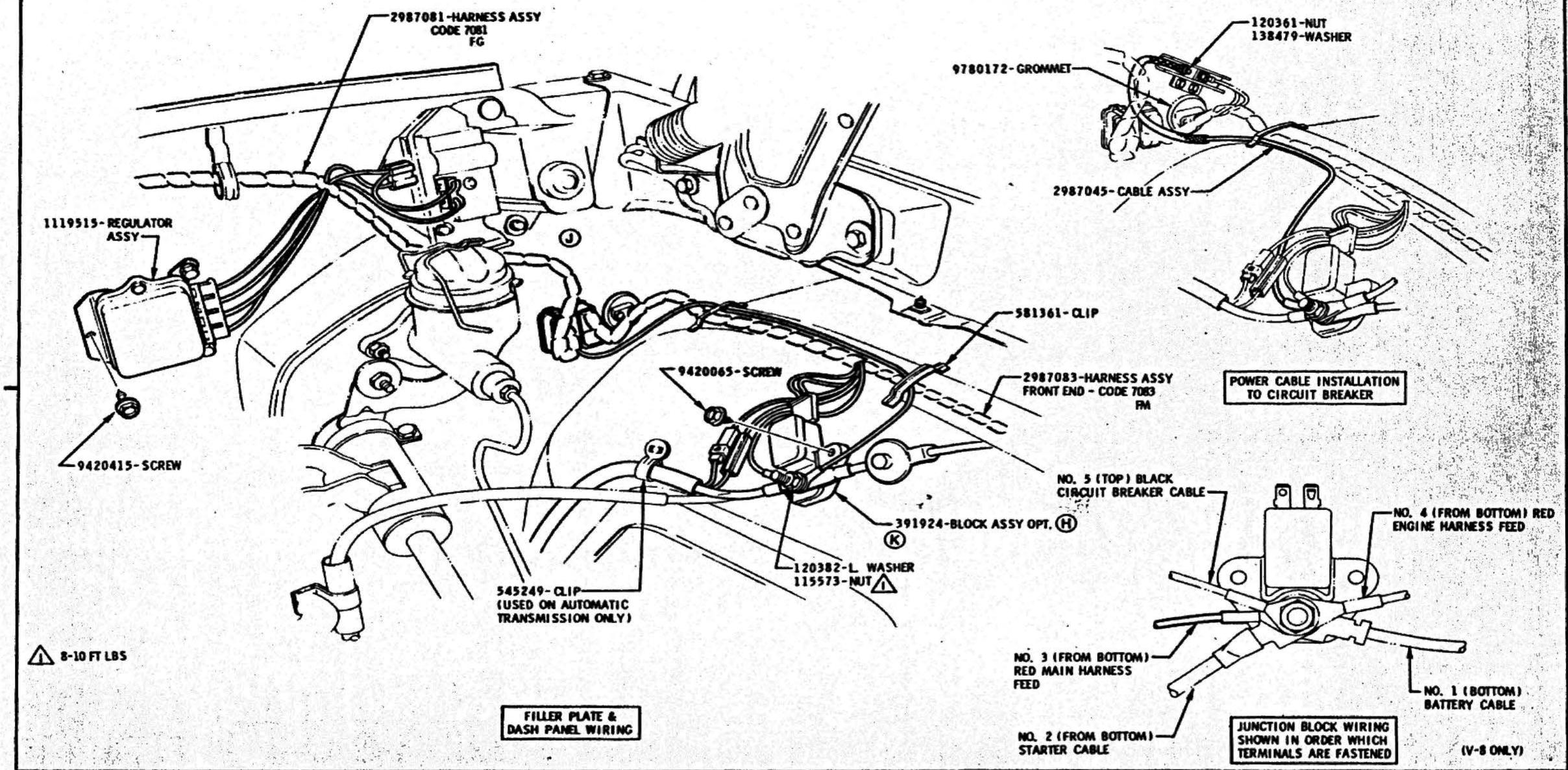

DATE	SYM	REVISION	DR.	CK.	DATE	SYM	REVISION	DR	CK	DATE	SYM	REVISION	DR	CK
					4-20-65	K	1116946 BLOCK ASSY REMOVED	JC	VP	5-28-64	E	WAS 115295-NUT	BP	VP
					2-5-65	J	CLIP REMOVED	JC	VP	5-5-64	D	"V-8" RELOCATED	WM	VP
					2-5-65	H	WAS 3B2429 BLOCK ASSY	DS	VP	4-2-64	C	WAS 9717084 GROMMET	CM	VP
					7-15-64	G	CODE ADDED	GV	BP	4-2-64	B	VIEWS ADDED FROM 1963	CM	VP
					6-5-64	F	WAS 9419380 SCREW	BP	VP	4-2-64	A	VIEW CANCELLED	CM	VP

INSTALLATION
DATE NOV. 22, 1963
DR. BY C.E. MAY
CHECKED H. VAN PELT
APPR.

ELECTRICAL

FIRST USED 1965

Oldsmobile GRAPHIC ILLUSTRATION

SERIES F85

REF. 12

PAGE 12-3.1

PART NO. 386799

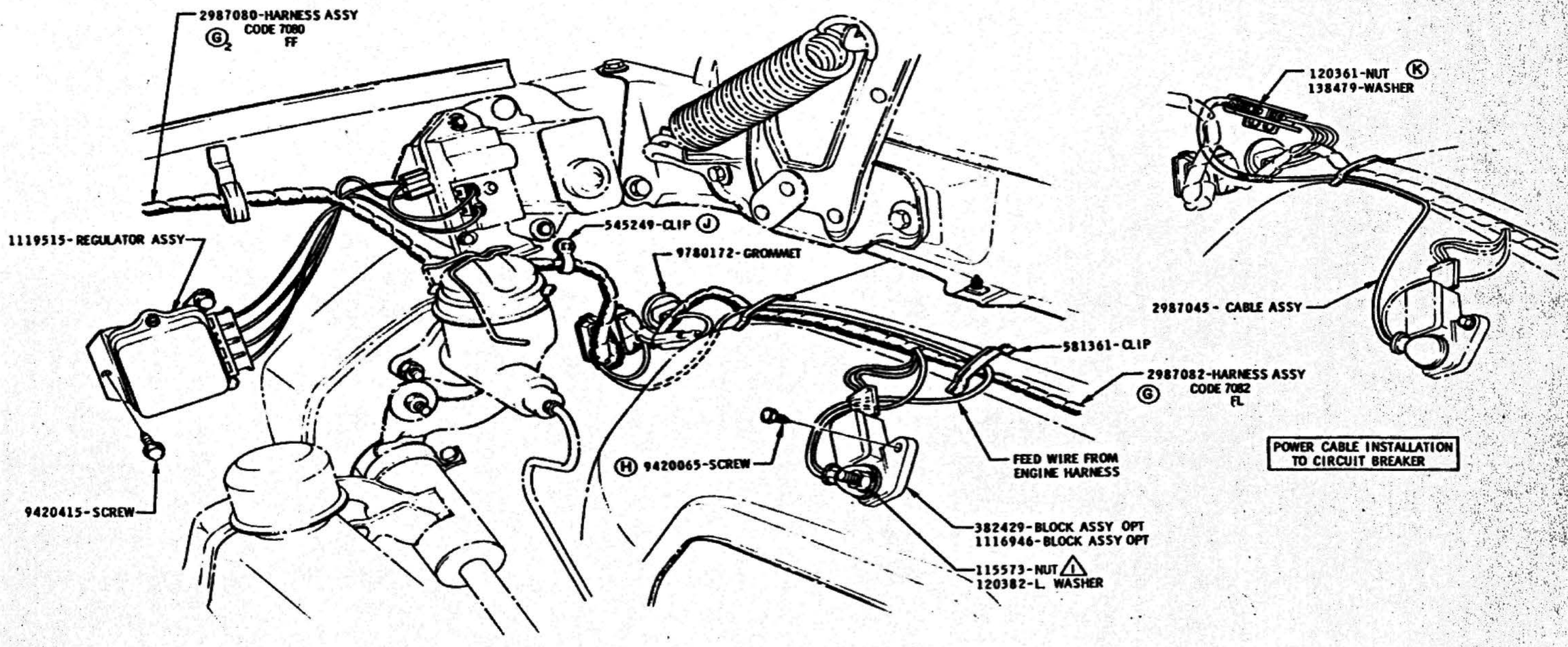

(V-6 ONLY)

DATE	SYM	REVISION	DR.	CK.	DATE	SYM	REVISION	DR.	CK.	DATE	SYM	REVISION	DR.	CK.
					8-31-64	K	WAS 115295 NUT	GB	VP	5-25-64	E	REVISED & RECRAWN	WM	VP
					8-31-64	J	CLIP ADDED	CM	VP	4-2-64	D	VIEWS ADDED FROM R3.5	CM	VP
					8-7-64	H	WAS 9419356 SCREW	BP	DR	4-2-64	C	VIEWS MOVED TO R-3.1	CM	VP
					7-15-64	G	CODE ADDED	GV	BP	3-6-64	B	WAS 9420065-SCREW	CM	VP
					6-16-64	F	TORQUE ADDED	GB	VP	2-27-64	A	WAS 9779844 GROMMET	GB	VP

INSTALLATION — ELECTRICAL

DATE NOV. 22, 1963
DR. BY C.E. MAY
CHECKED H. VAN PELT
APPR.
APPR.

FIRST USED 1965 — Oldsmobile GRAPHIC ILLUSTRATION — PAGE 12-3.2

SERIES F85 — REF. 12 — PART NO. 386799

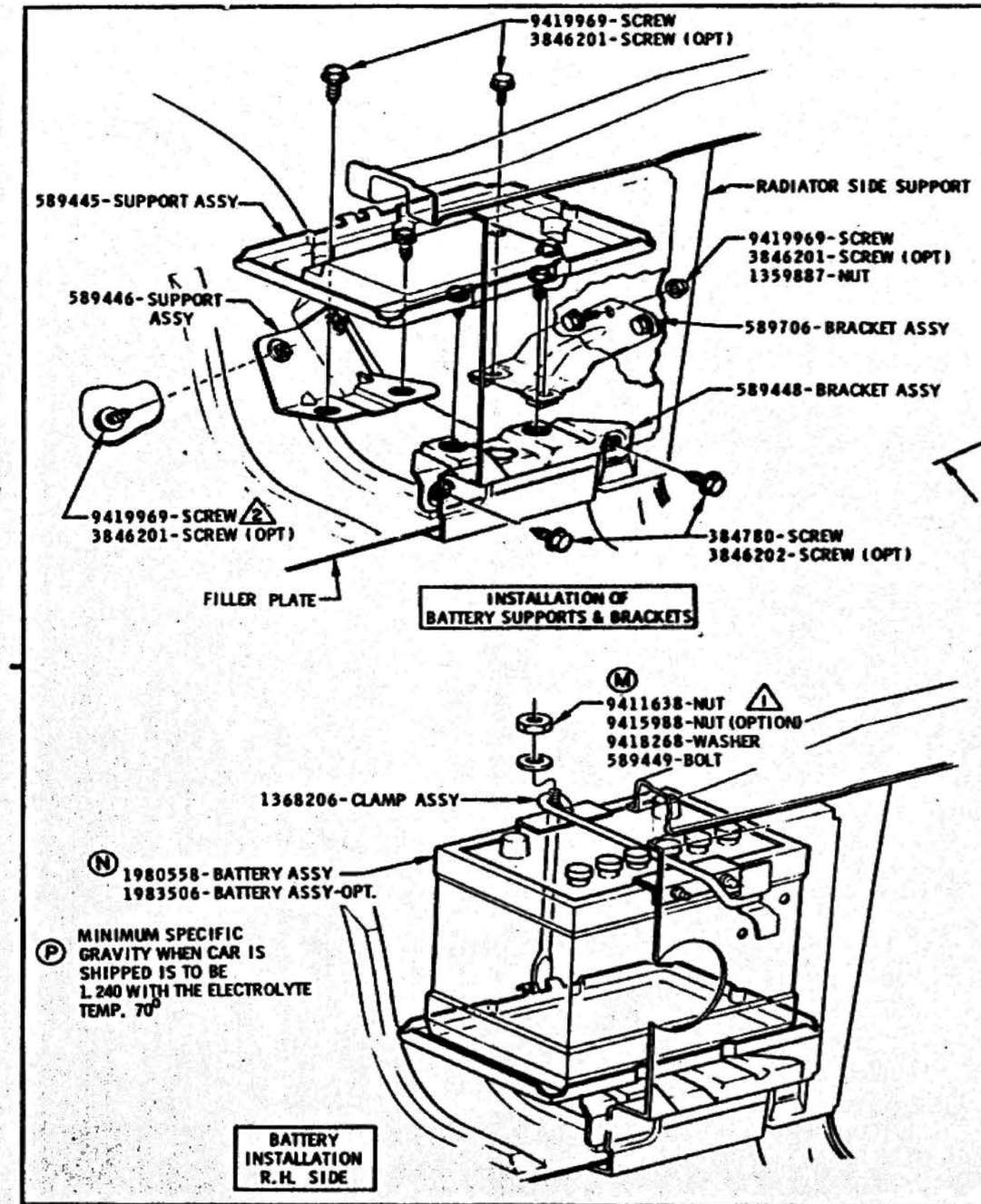

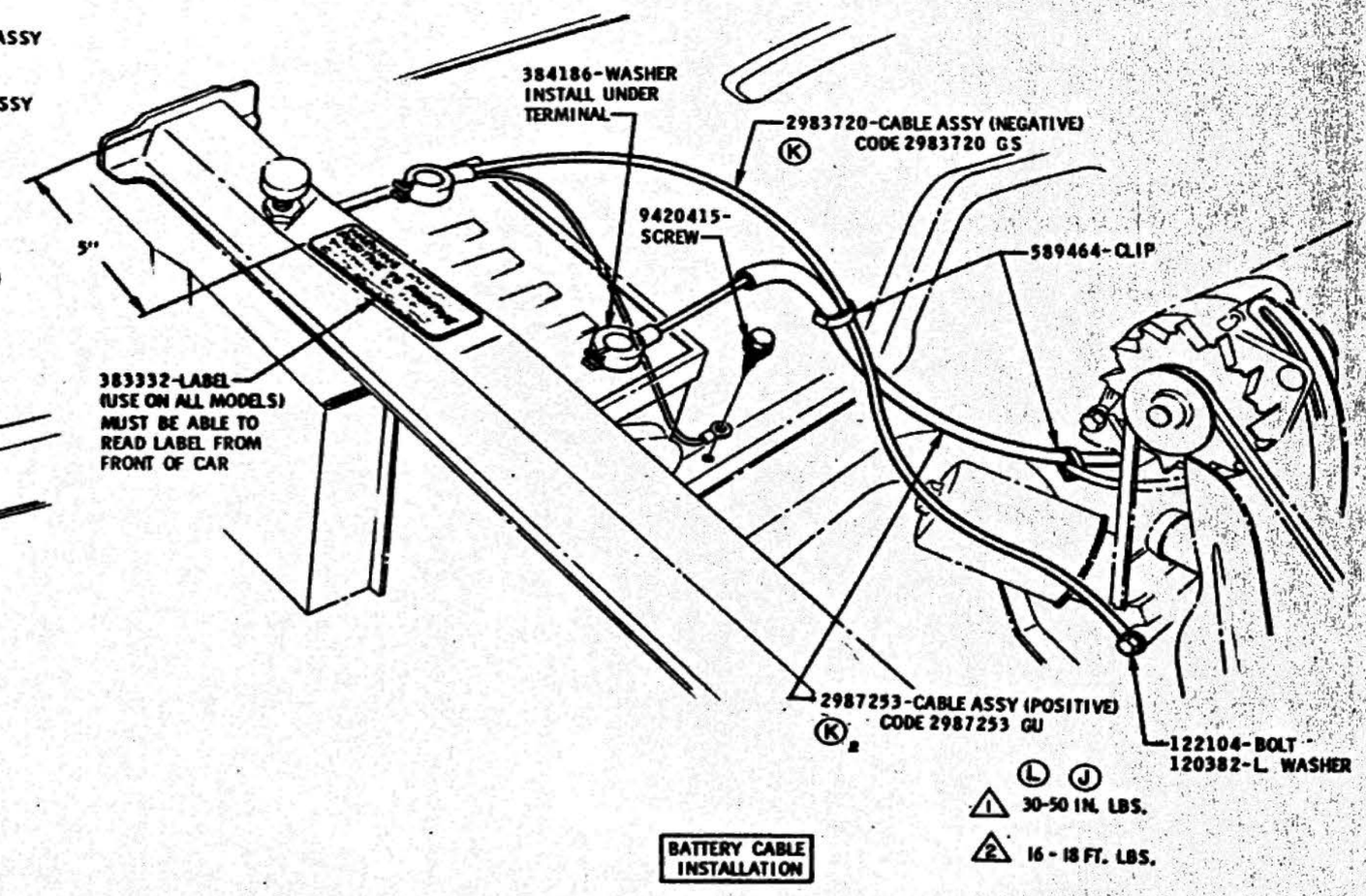

(V-6 ONLY)

DATE	SYM	REVISION	DR.	CK.	DATE	SYM	REVISION	DR.	CK.	DATE	SYM	REVISION	DR.	CK.
12-28-64	P	SPEC. GRAVITY NOTE ADDED	BP	VP	7-16-64	K	CODE ADDED	GV	BP	4-11-64	E	WAS 120383-L. WASHER	WM	VP
12-28-64	N	1983506-OPT. ADDED	BP	VP	6-16-64	J	TORQUE ADDED	BP	VP	4-11-64	D	WAS 2983557 & 2986214	WM	VP
9-22-64	M	WAS 9417954 NUT	BP	VP	5-25-64	H	REVISED & REDRAWN	WM	VP	4-2-64	C	VIEWS ADDED FROM 12-3.4	OM	VP
9-22-64	L	TORQUE REVISED	BP	VP	5-4-64	G	WAS 568568-SCREW	BP	VP	4-2-64	B	VIEWS MOVED TO 12-3.2	OM	VP
					4-11-64	F	LABEL ADDED	OM	VP	9-6-64	A	WAS 508677-NUT	OM	VP

INSTALLATION	ELECTRICAL		
DATE NOV. 22, 1963	FIRST USED 1965	Oldsmobile GRAPHIC ILLUSTRATION	PAGE 12-3.3
DR. BY C.E. MAY			
CHECKED H. VAN PELT	SERIES F85	REV. 12	PART NO. 386799
APPR.			
APPR.			

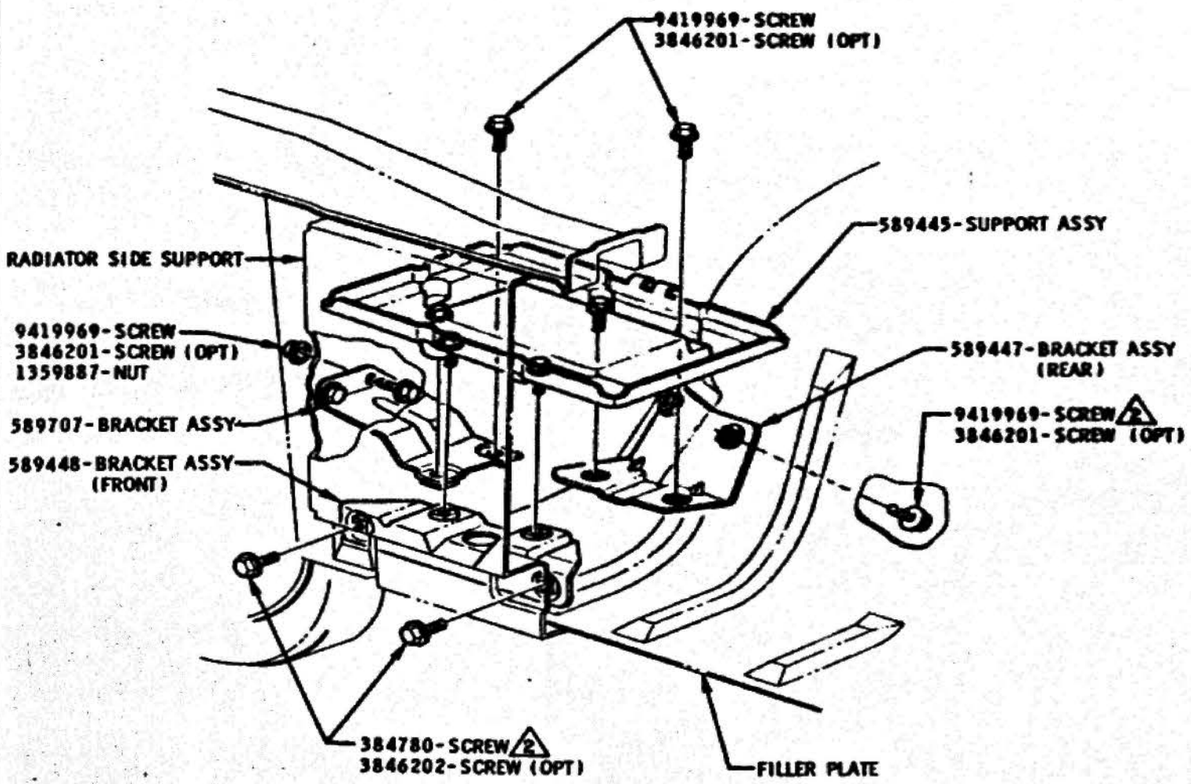

INSTALLATION OF BATTERY SUPPORTS & BRACKETS

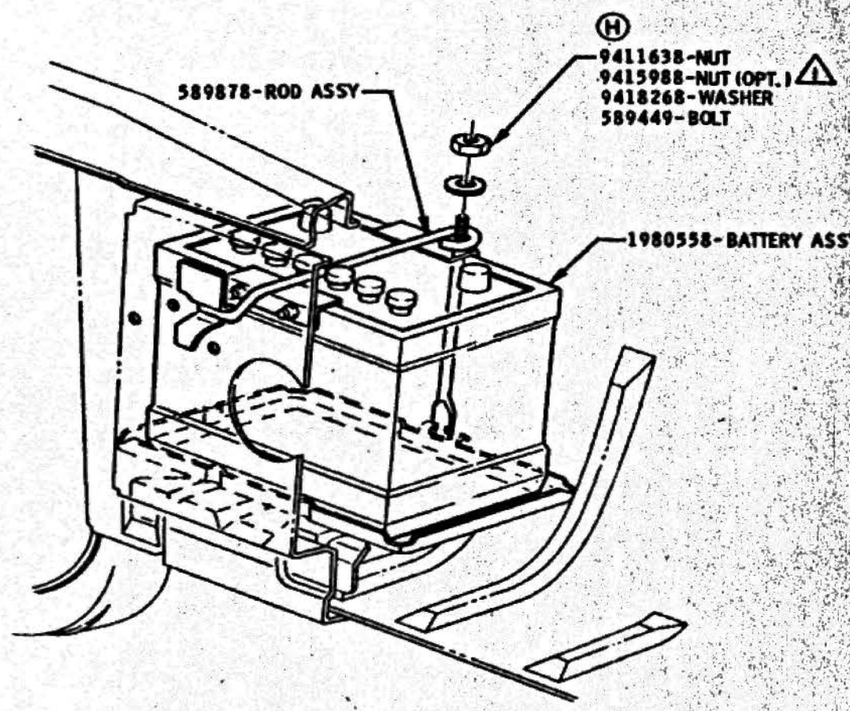

BATTERY INSTALLATION L.H. SIDE

G

1 30-50 IN. LBS.

2 16-18 FT LBS

(V-8 ONLY)

DATE	SYM	REVISION	DR.	CK.	DATE	SYM	REVISION	DR.	CK.	DATE	SYM	REVISION	DR.	CK.
										5-4-64	E	VIEW ADDED	WM	VP
										4-2-64	D	VIEWS ADDED FROM R-3110	CH	VP
					9-30-64	H	WAS 9417954 - NOT	[illegible]	VP	4-2-64	C	VIEWS MOVED TO REF'S	CH	VP
					9-30-64	G	TORQUE REVISED	[illegible]	VP	1-30-64	B	WAS 2987267-CABLE	JP	VP
					5-25-64	F	REVISED & REDRAWN	WM	VP	1-4-64	A	WAS 2989664-CABLE ASSY	JA	VP

INSTALLATION — ELECTRICAL

DATE NOV. 22, 1963
DR. BY C.E. MAY
CHECKED H. VAN PELT
APPR.
APPR.

FIRST USED 1965 — Oldsmobile Service ILLUSTRATION

SERIES F85 — REF. 12

PAGE 12-3.4

PART NO. 386799

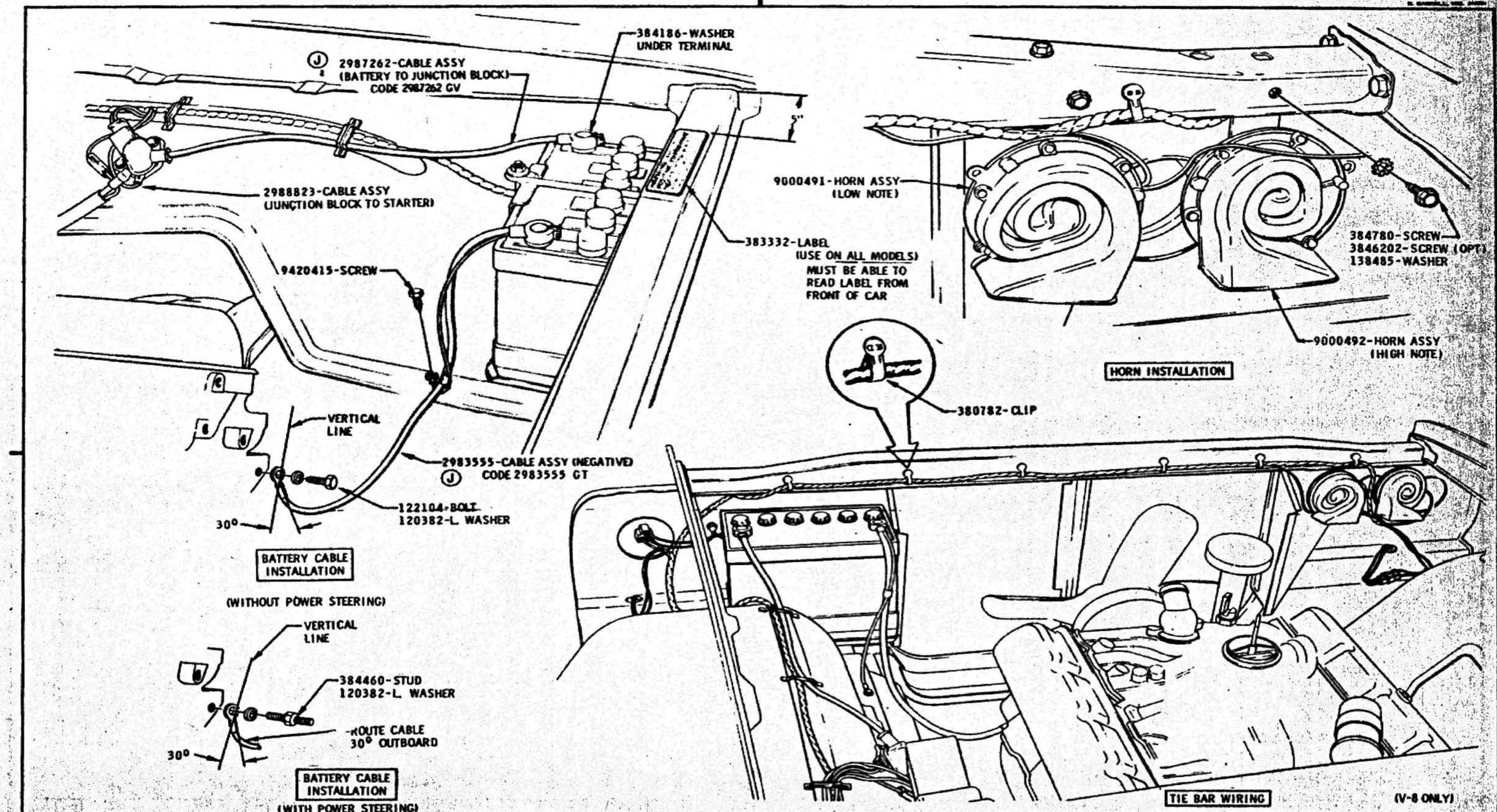

DATE	SYM	REVISION	DR.	CK.	DATE	SYM	REVISION	DR.	CK.	DATE	SYM	REVISION	DR.	CK.
										4-17-64	E	VIEW REMOVED	MB	VP
					7-16-64	J	CODE ADDED	GV	BP	4-11-64	D	NOTE REVISED	TM	VP
					5-25-64	H	REVISED & REDRAWN	WM	VP	4-4-64	C	TORQUE ADDED	CM	VP
					4-17-64	G	VIEW ADDED	CM	VP	3-28-64	B	REDRAWN & REVISED	CM	VP
					4-17-64	F	VIEW REVISED	CM	VP	3-6-64	A	WAS 1115168 OBL ASSY	CM	VP

INSTALLATION — ELECTRICAL

DATE NOV. 22, 1963 — DR. BY C. E. MAY — CHECKED H. VAN PELT — APPR. — APPR.

FIRST USED 1965 — Oldsmobile GRAPHIC ILLUSTRATION — SERIES F85 — REF. 12 — PAGE 12-3.5 — PART NO. 386799

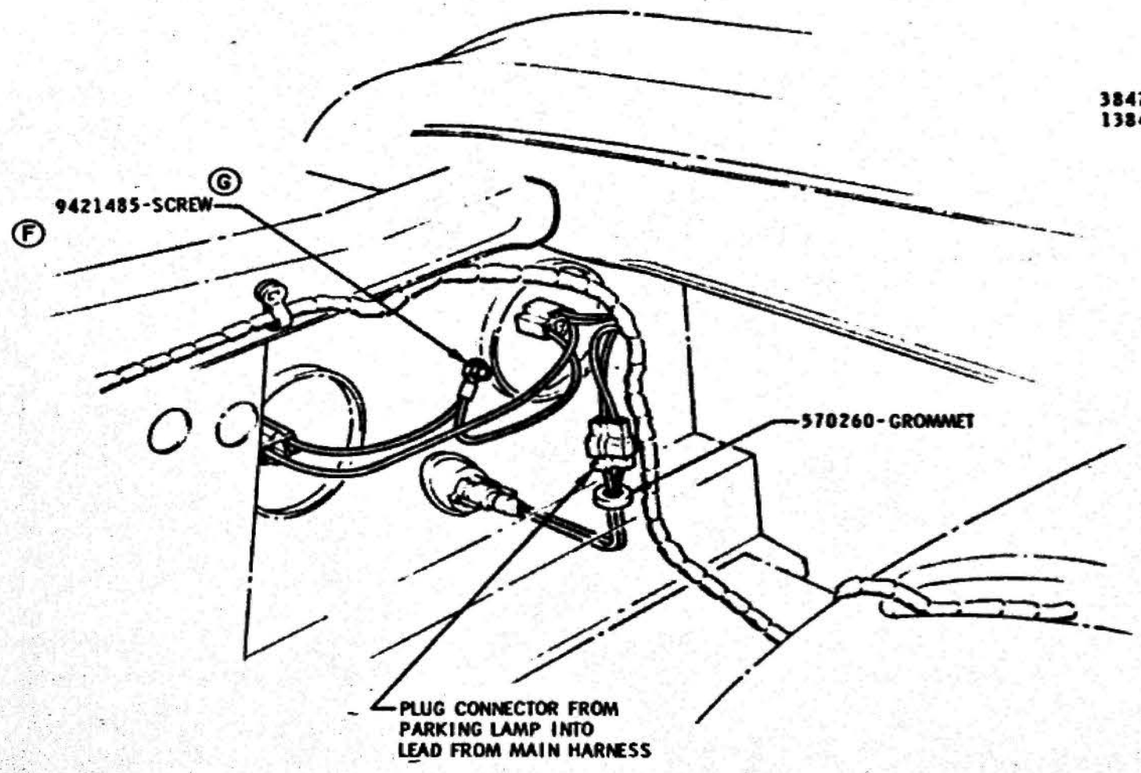

HEAD LAMP AND TURN SIGNAL WIRING

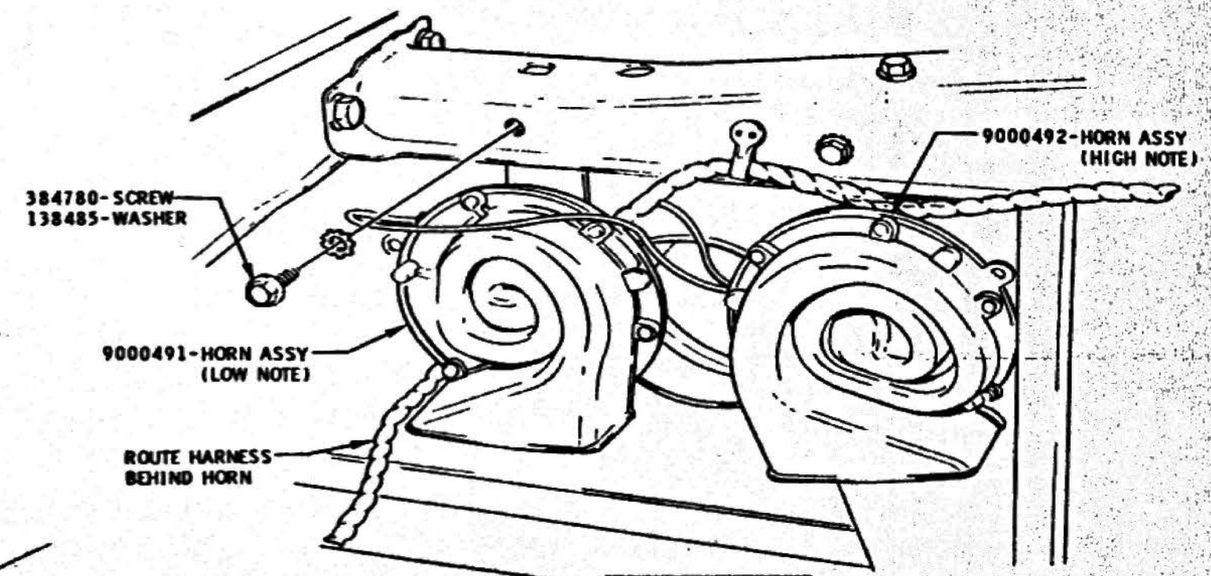

HORN INSTALLATION L.H. SIDE (V-6 ONLY)

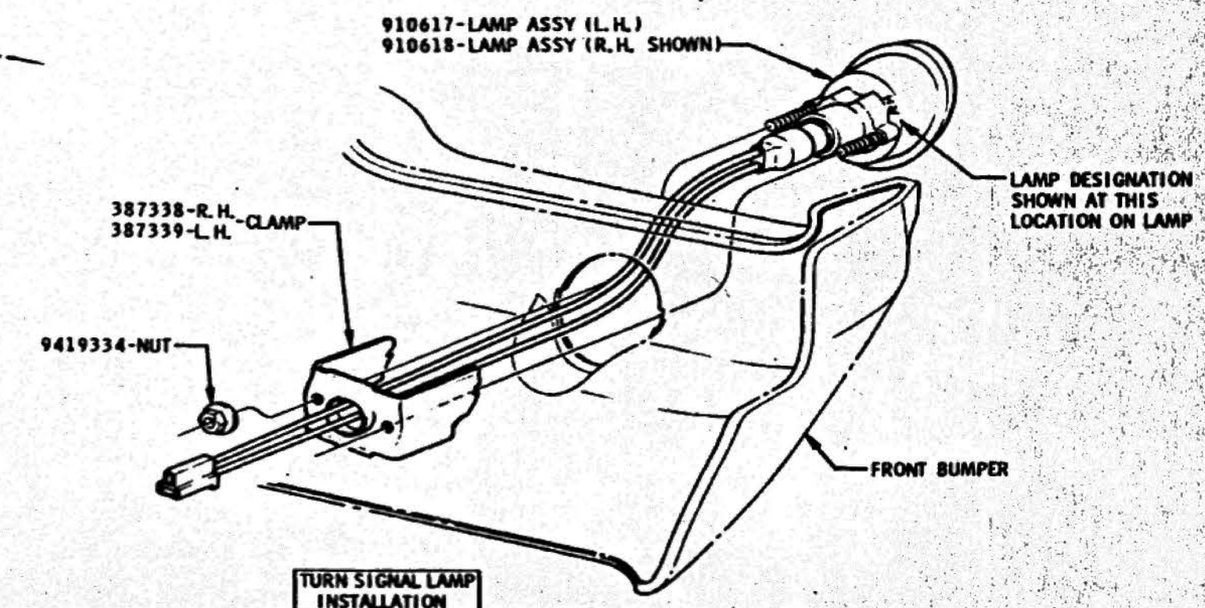

TURN SIGNAL LAMP INSTALLATION

DATE	SYM	REVISION	DR.	CK.	DATE	SYM	REVISION	DR.	CK.	DATE	SYM	REVISION	DR.	CK.
										5-25-64	E	REVISED & REDRAWN	MM	VD
										5-13-64	D	1371861 WAS 1109957	WM	PTS
										4-11-64	C2	WAS 9418823-BOLT	WM	VD
					10-31-64	B	9421485-SCR. REINSTATED	CG	VD	4-4-64	B	TORQUE ADDED	CM	VD
					7-28-64	F	WAS 9421485-SCREW	BP	VD	2-11-64	A	WAS 1100656 GEN.	CB	VD

INSTALLATION
DATE NOV. 22, 1963
DR. BY C. E. MAY
CHECKED H. VAN PELT
APPR.
APPR.

ELECTRICAL

FIRST USED 1965

Oldsmobile GRAPHIC ILLUSTRATION

SERIES F85

REV. 12

PAGE 12-3.6

PART NO. 386799

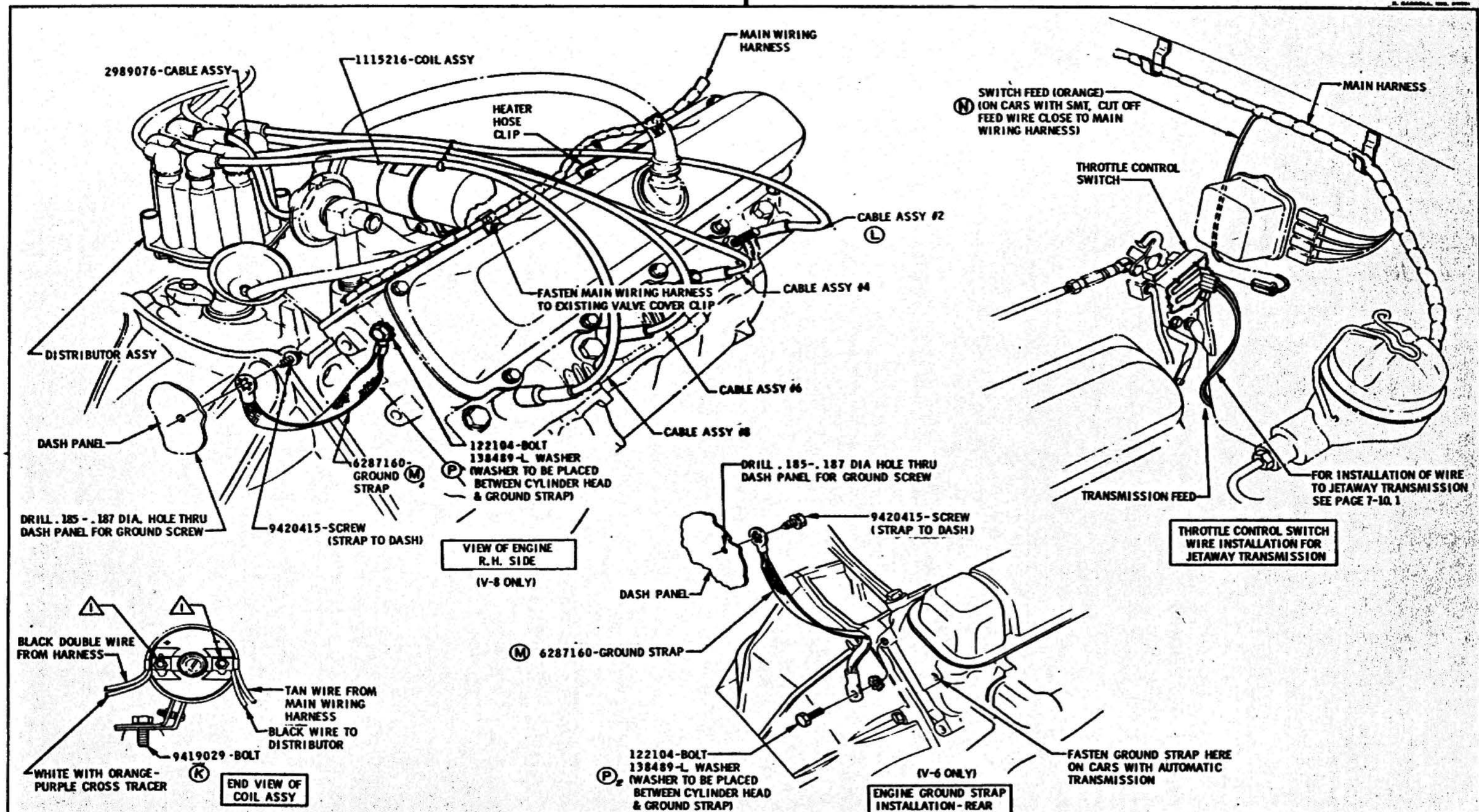

DATE	SYM	REVISION	DR.	CK.	DATE	SYM	REVISION	DR.	CK.	DATE	SYM	REVISION	DR.	CK.
5-6-65	P	NOTE ADDED	DS	VP	8-18-64	K	WAS 9419342-BOLT	BP	VP	4-16-64	E	WAS 367848 CLAMP ASSY.	PS	VP
4-20-65	N	NOTE ADDED	DS	VP	8-18-64	J	NOTE REVISED	BP	VP	4-11-64	D	WAS 582045-TUBE	WM	VP
2-4-65	M	WAS 2979771 STRAP	DS	WB	7-2-64	G	REVISED TO DETAIL	BP	VP	2-27-64	C	WAS 2983557 CABLE ASSY	CB	VP
9-15-64	L	CABLE ASSY #2 REROUTED	BP	VP	5-25-64	F	REVISED & REDRAWN	WM	VP	2-6-64	B	2986214 CABLE REMOVED	GB	VP
										1-4-64	A	TAPE NOTES ADDED	WM	DT

INSTALLATION
DATE NOV. 22, 1965
DR. BY C.E. MAY
CHECKED H. VAN PELT
APPR.
APPR.

ELECTRICAL

FIRST USED 1965

Oldsmobile Graphic ILLUSTRATION

SERIES F85

REF. 12

PAGE 12-3.7

PART NO. 386799

1 2-4 FT LBS

2 10-12 FT LBS

3 1-1.5 FT LBS

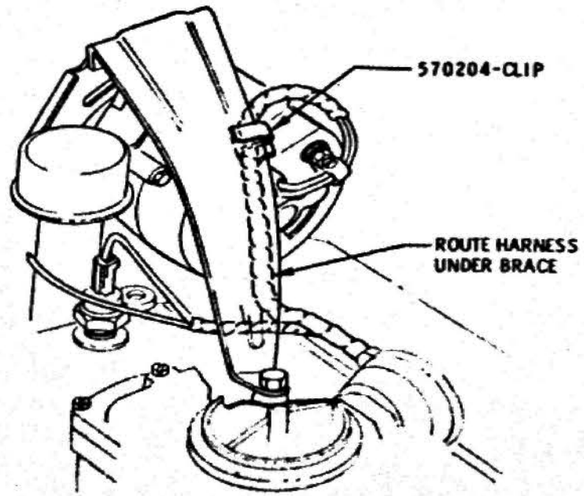

GENERATOR HARNESS ROUTING

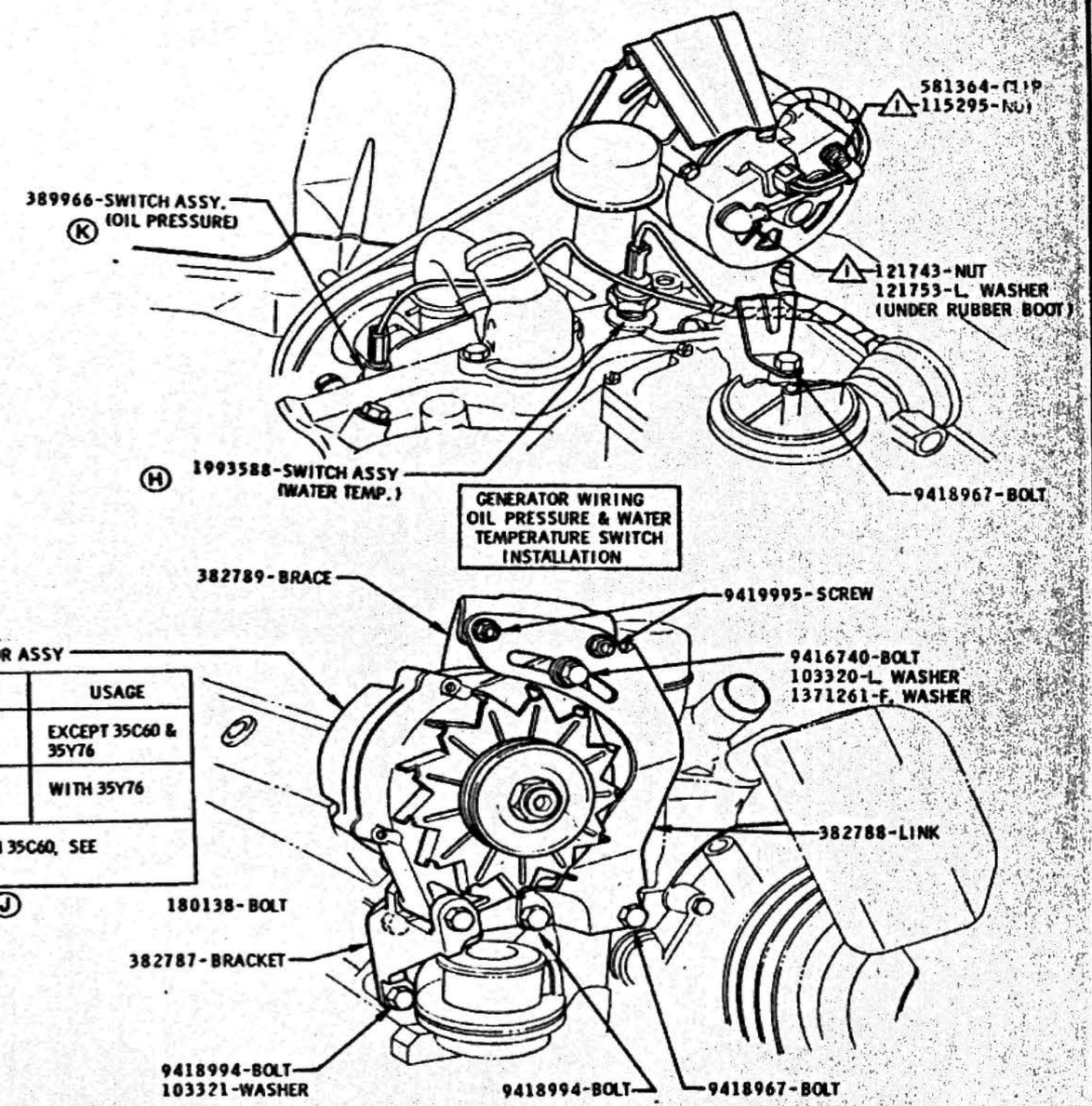

GENERATOR WIRING OIL PRESSURE & WATER TEMPERATURE SWITCH INSTALLATION

PART NO.	CODE	USAGE
1100704	XC 2	EXCEPT 35C60 & 35Y76
1100686	AH 2	WITH 35Y76
FOR GENERATOR WITH 35C60, SEE PAGE 35C60-2.26		

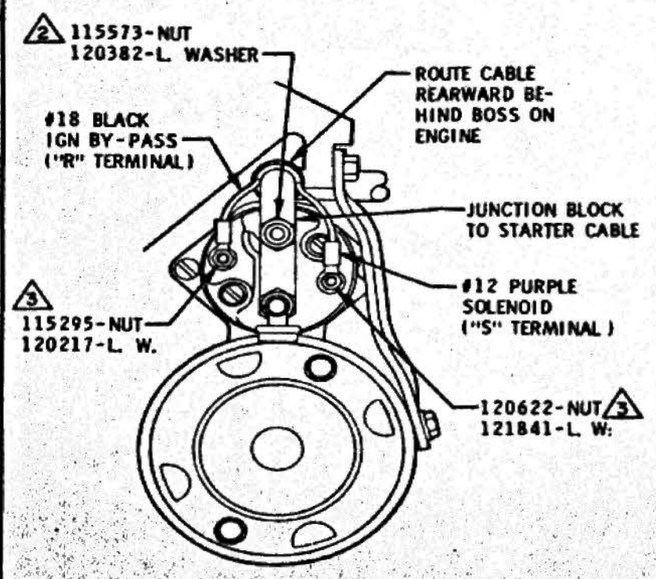

GENERATOR INSTALLATION

V8 ONLY

DATE	SYM	REVISION	DR.	CK.	DATE	SYM	REVISION	DR.	CK.	DATE	SYM	REVISION	DR.	CK.
					7-28-64	K	WAS 3815936-SWITCH	BP	VP	4-2-64	E	VIEWS ADDED FROM 12-3.12	CM	VP
					7-10-64	J	GEN USAGE CHART ADDED	BP	VP	4-2-64	D	VIEWS MOVED TO 12-3.9	CM	VP
					5-28-64	H	WAS 1998613-SW. ASSY	VP	VP	2-27-64	C	2776216-SCREW ADDED	CB	VP
					5-25-64	G	REVISED & REDRAWN	WM	VP	2-27-64	B	2328616 STRAP ADDED	CB	VP
					4-2-64	F	FLASHER VIEW ADDED	CB	VP	1-4-64	A	VIEW ADDED	CM	DT

INSTALLATION

DATE NOV. 22, 1963

DR. BY C.E. MAY

CHECKED H. VAN PELT

APPR.

APPR.

ELECTRICAL

FIRST USED 1965

Oldsmobile GRAPHIC ILLUSTRATION

SERIES F85

REF. 12

PAGE 12-3.8

PART NO. 386799

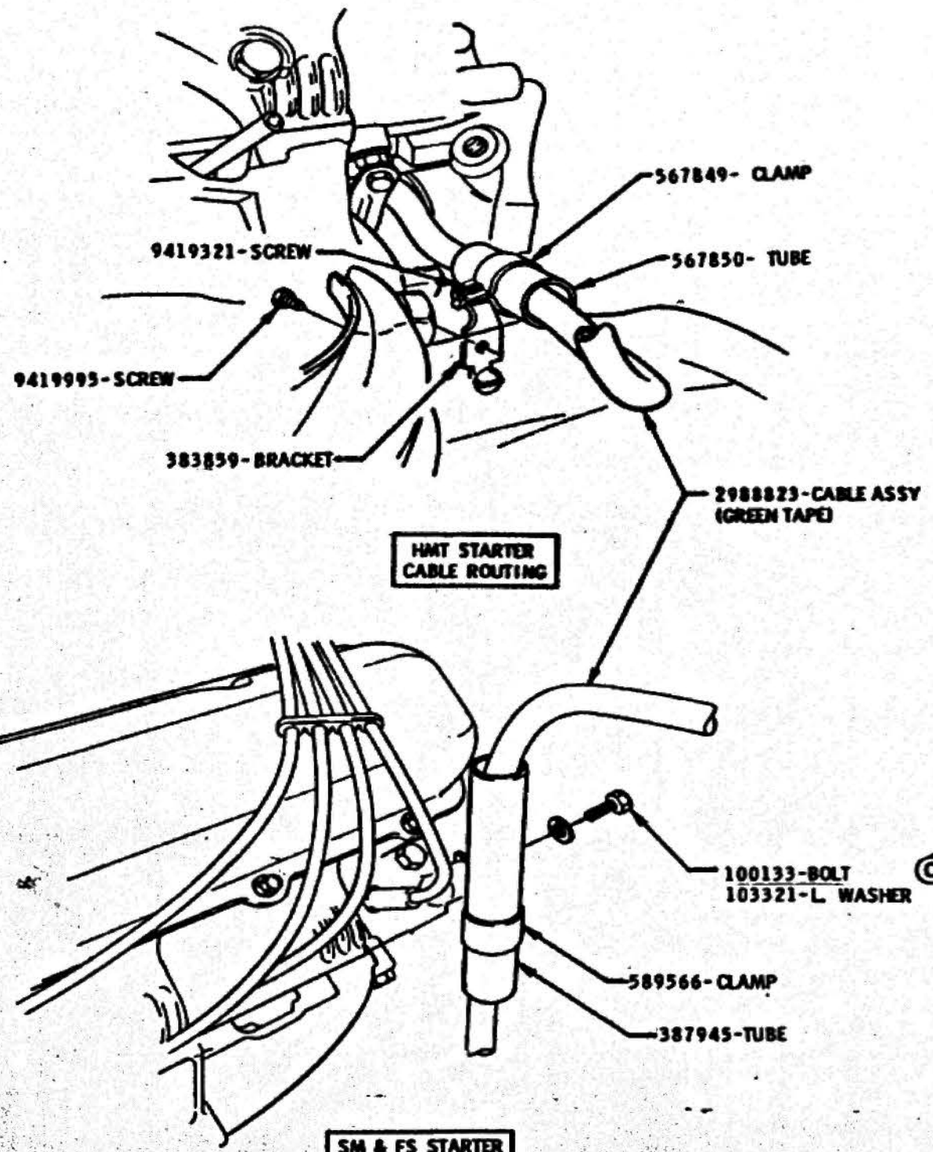

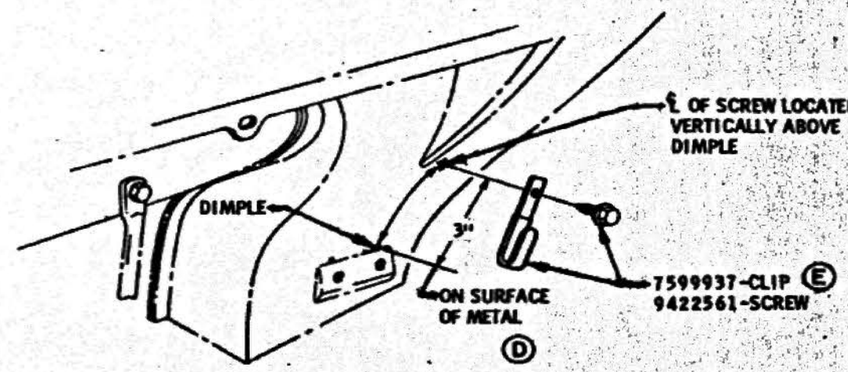

DATE	SYM	REVISION	DR.	CK.	DATE	SYM	REVISION	DR.	CK.	DATE	SYM	REVISION	DR.	CK.
										5-14-65	E	WAS 4581148 CLIP		VP
										2-5-65	D	VIEW ADDED		VP
										7-6-64	C	WAS 122119 BOLT		
										5-25-64	B	REVISED & REDRAWN		VP
										8-21-64	A	WAS 980786 CLIP		VP

INSTALLATION — ELECTRICAL

DATE DEC. 13, 1968
DR. BY C.E. MAY
CHECKED H. VAN PELT
APPR.
APPR.

FIRST USED 1965

Oldsmobile Graphic Illustration

GROUP FRS

REV. 10

PAGE 12-3.10

PART NO. 386799

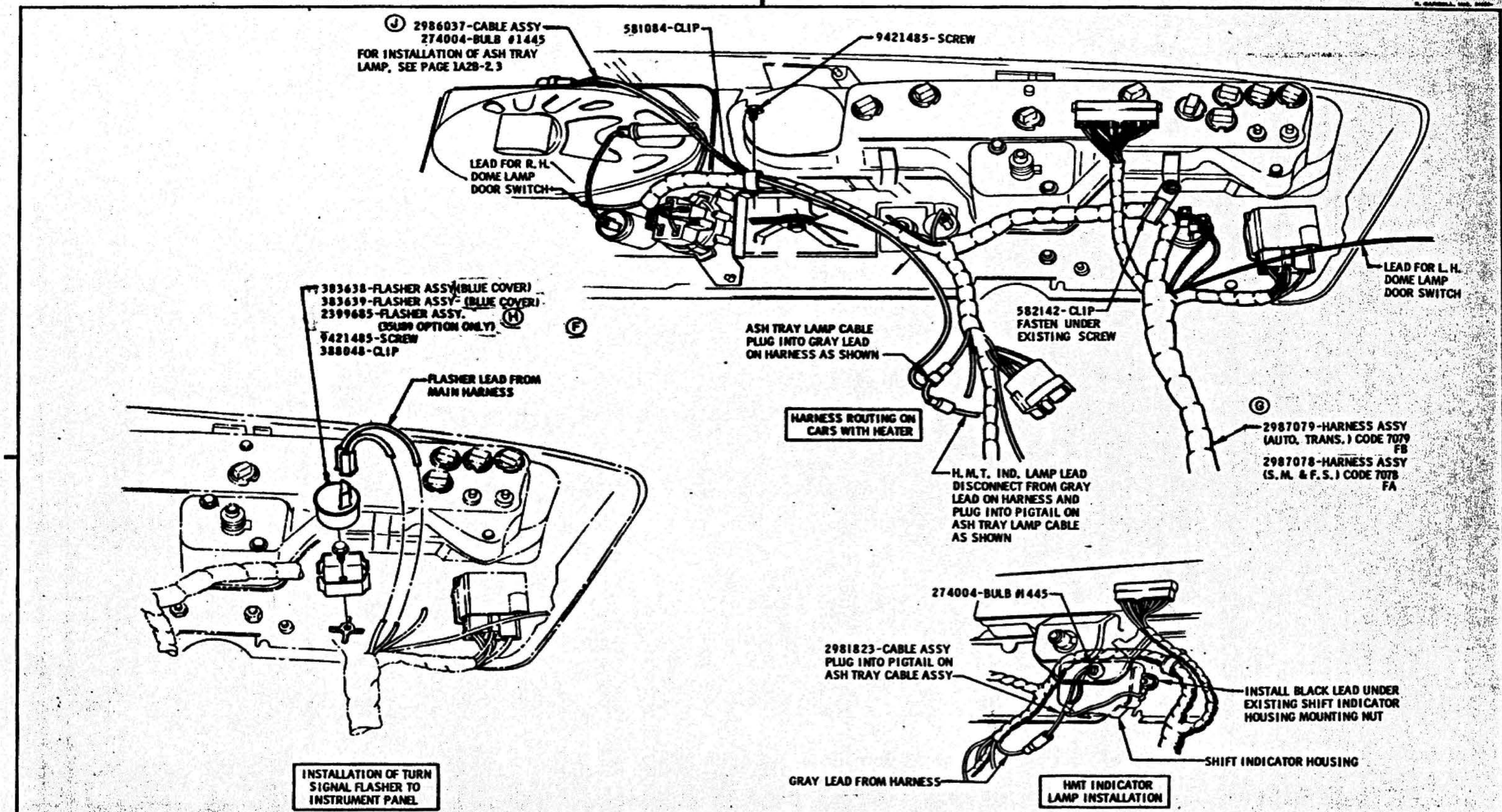

DATE	SYM	REVISION	DR.	CK.	DATE	SYM	REVISION	DR.	CK.	DATE	SYM	REVISION	DR.	CK.
					8-18-64	J	CABLE ASSY ADDED	CM	VP	5-25-64	E	REVISED & REDRAWN	WM	VP
					7-28-64	H	2399685-FLASHER ADDED	[illegible]	VD	4-2-64	D	VIEW ADDED FROM 1C-3.4	CM	VP
					7-15-64	G	CODE ADDED	CY	[illegible]	12-3-64	C	VIEWS MOVED TO 1C-3.4	CM	VP
					6-2-64	F	COLOR CODING ADDED	[illegible]	VP	11-4-64	B	WAS 9419305-SCREW	BP	VP
											A	PART NOS. ADDED	PA	VP

INSTALLATION	ELECTRICAL
DATE DEC. 13, 1963	FIRST USED 1965
DR. BY C.C. MAY	Oldsmobile Graphic Illustration
CHECKED H. VAN PELT	
APPR.	DESIGNED F85
APPR.	REV. 12
PAGE	12-3.11
PART NO.	386799

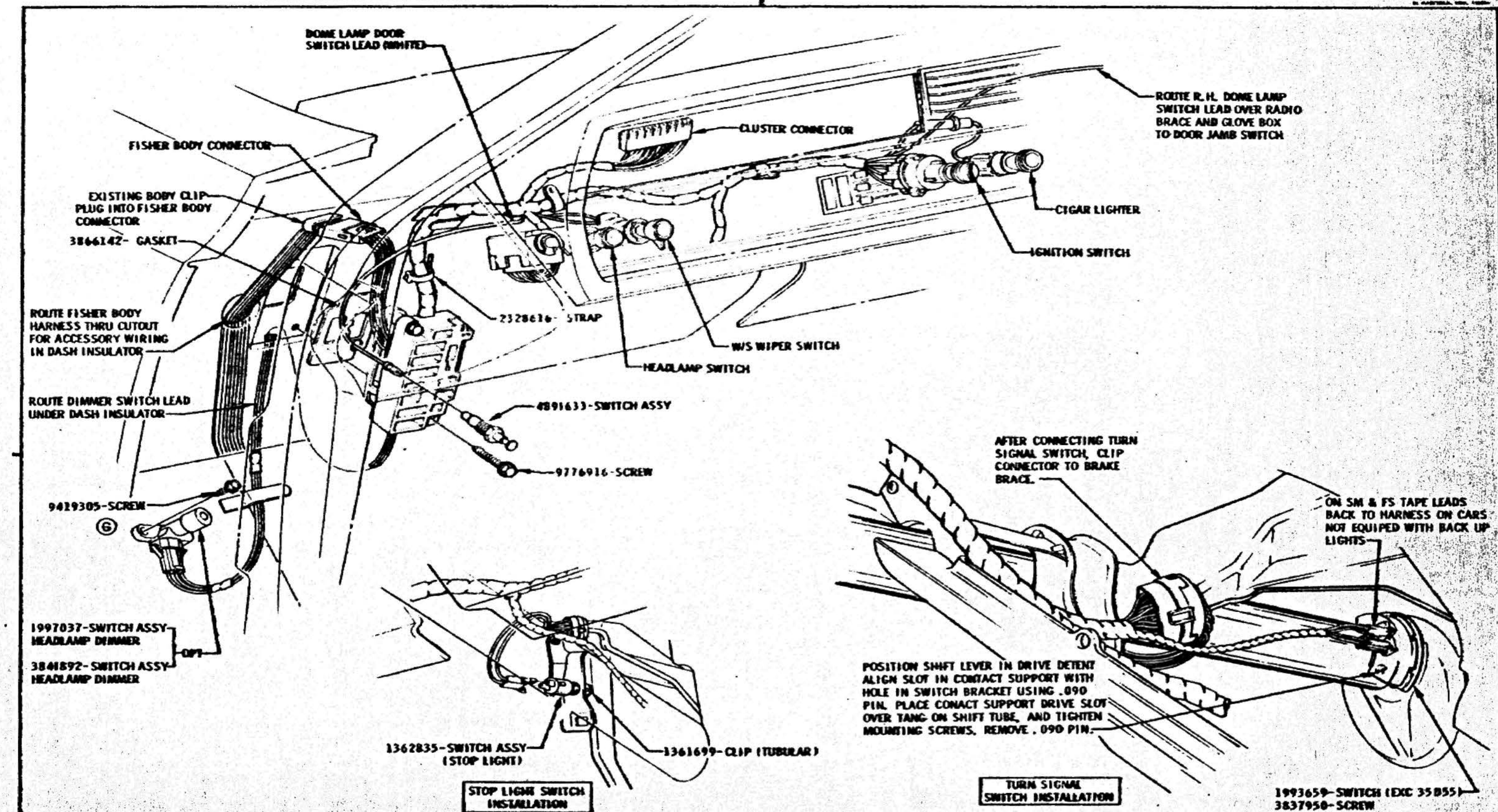

DATE	SYM	REVISIONS	DR.	CK.	DATE	SYM	REVISIONS	DR.	CK.	DATE	SYM	REVISIONS	DR.	CK.
										4-2-64	E	WAS 1350618 SCREW	CM	VP
										4-2-64	D	VIEWS ADDED	CM	VP
										4-2-64	C	VIEWS ADDED FROM 12-3.9	CM	VP
					6-30-64	G	WAS 9419321-SCREW	PD	VP	4-2-64	B	VIEW MOVED TO 12-3.8	CM	VP
					5-25-64	F	REVISED & REDRAWN	WK	VP	1-14-64	A	WAS 3419303 SCREW	CB	VP

INSTALLATION — ELECTRICAL

DATE DEC. 24, 1963
DR. BY C. C. MAY
CHECKED H. VAN PELT
APPR.
APPR.

FIRST USED 1965 — Oldsmobile Service — PAGE 12-3.12

SERIES F85 — REV. 12 — PART NO. 386799

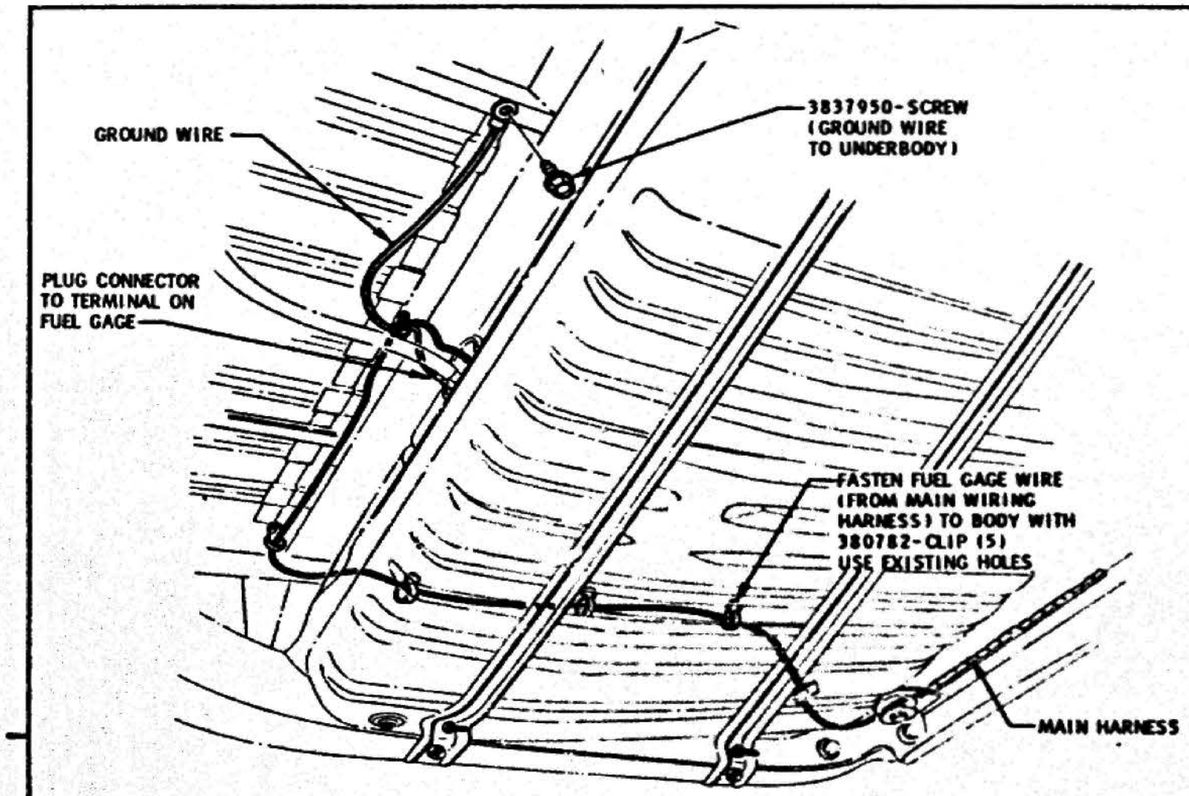

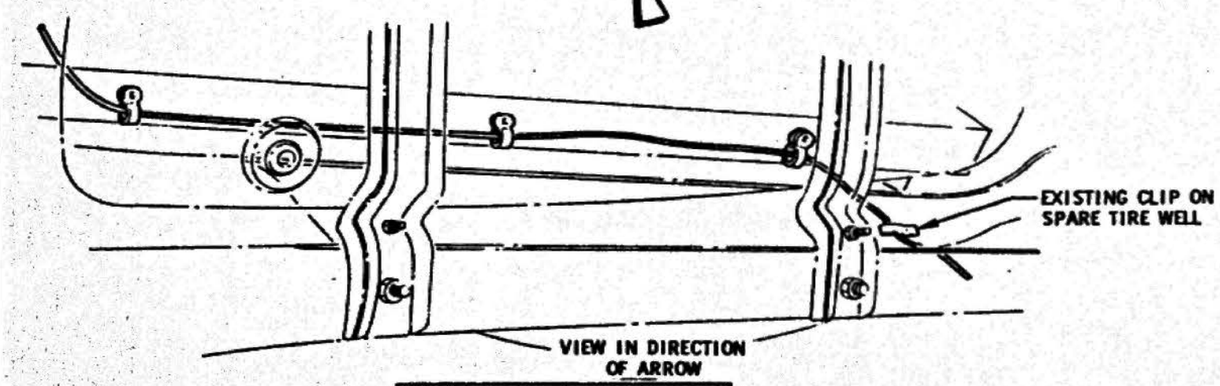

FUEL TANK WIRING FOR STANDARD STATION WAGONS

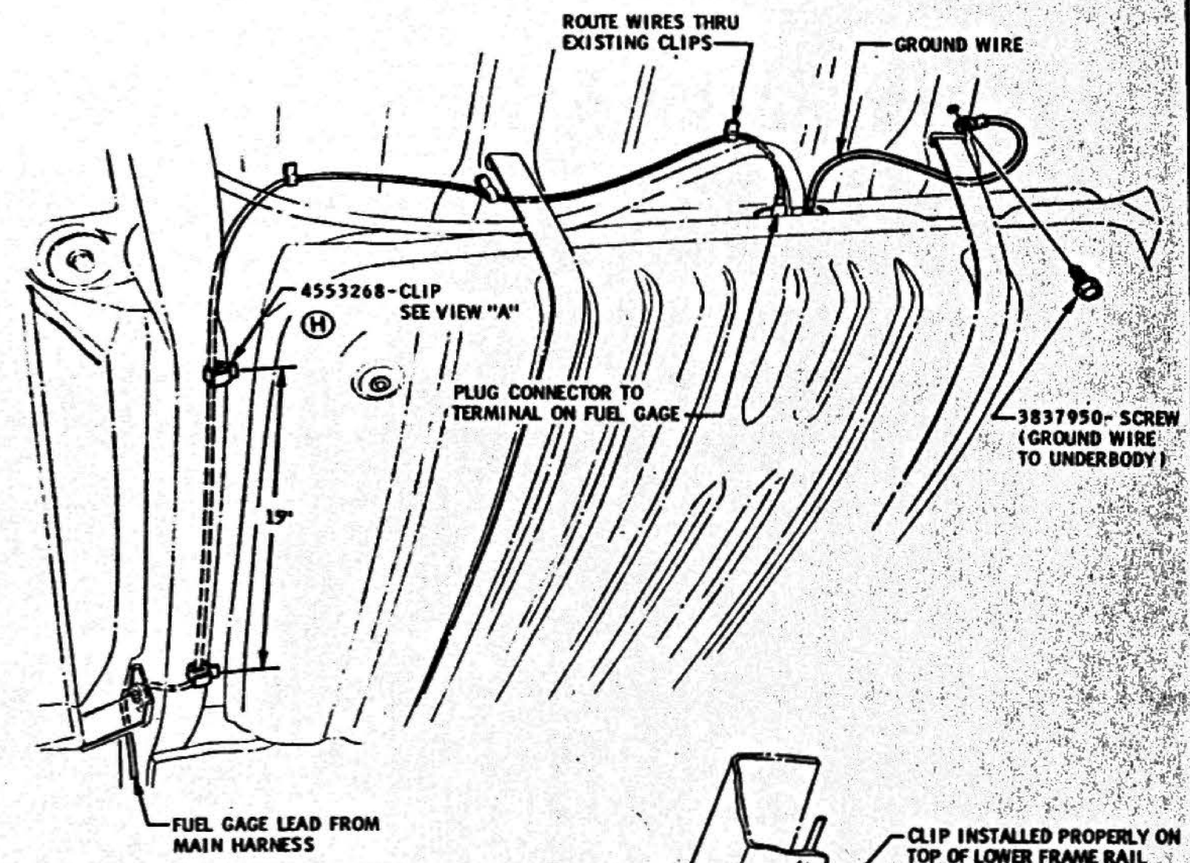

FUEL TANK WIRING FOR EXTENDED STATION WAGONS

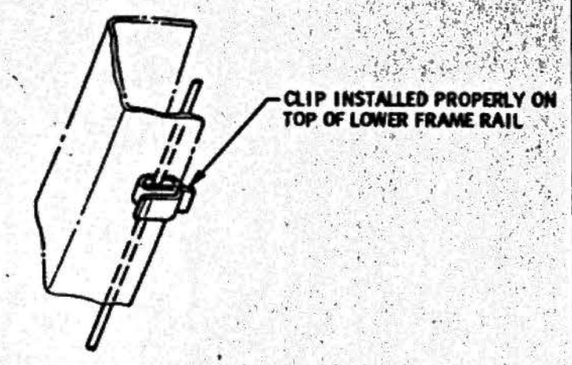

VIEW "A"

DATE	SYM	REVISION	DR.	CK.	DATE	SYM	REVISION	DR.	CK.	DATE	SYM	REVISION	DR.	CK.
										9-6-64	E	HARNESS RELOCATED	CM	VP
										9-6-64	D	NOTE REMOVED	CM	VP
					2-28-64	H	WAS 415780-CLIP	BP	VP	9-6-64	C	WAS 381094-CLIP	CM	VP
					5-25-64	G	REVISED & REDRAWN	WM	VP	2-27-64	B	NOTE ADDED	CM	VP
					3-24-64	F	WAS 2986024 HARN. ASSY.	CM	VP	1-23-64	A	WAS 588968-KNOB ASSY	BP	VP

INSTALLATION	ELECTRICAL		
DATE JAN 4 1964	FIRST USED 1965	Oldsmobile GRAPHIC ILLUSTRATION	PAGE 12-3.13
DR. BY C. E. MAY			
CHECKED VAN PELT	SERIES F85	REF. 12	PART NO. 386799
APPR.			
APPR.			

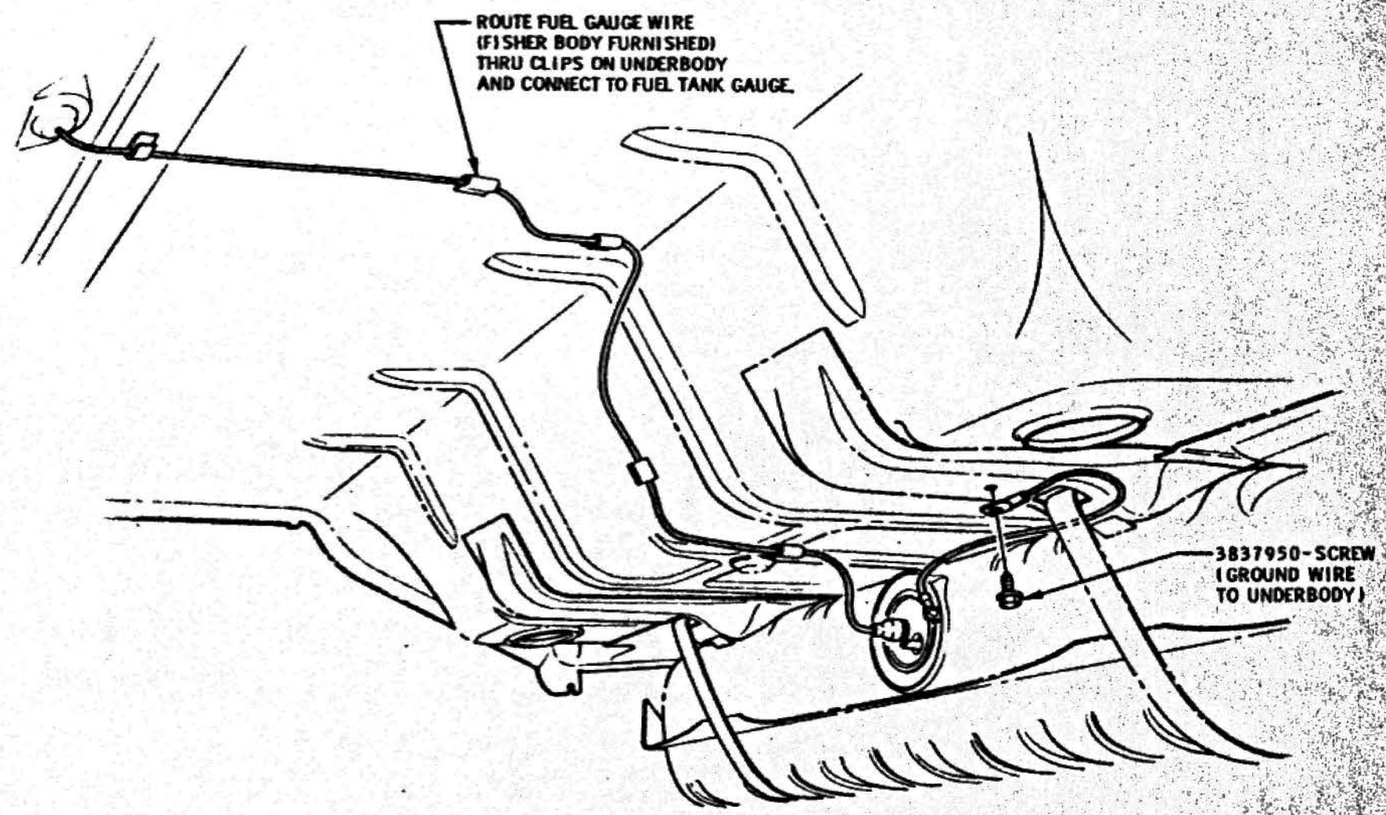

FUEL TANK WIRING
FOR SEDANS

DATE	SYM	REVISION	DR.	CK.	DATE	SYM	REVISION	DR.	CK.	DATE	SYM	REVISION	DR.	CK.

INSTALLATION
DATE MAY 25 1964
DR. BY C.E. MAY
CHECKED H. VAN PELT
APPR.
APPR

ELECTRICAL

FIRST USED 1965

Oldsmobile GRAPHIC ILLUSTRATION

PAGE 12-3.14

SERIES F85

REF. 12

PART NO. 386799

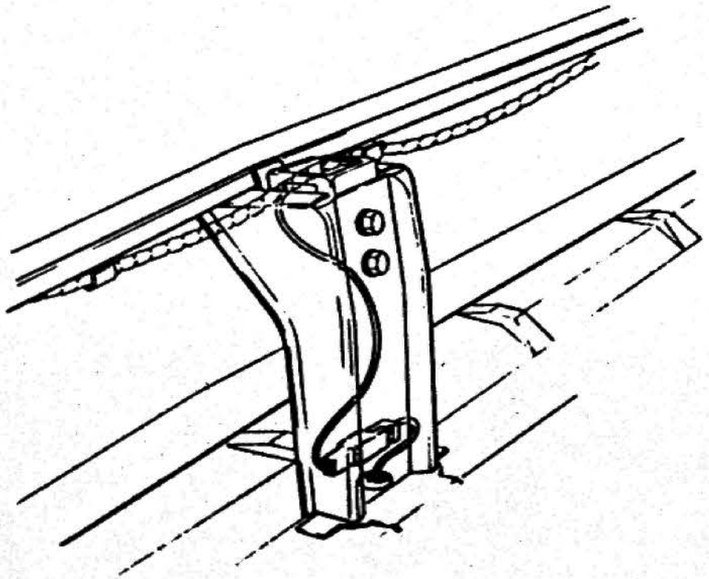

AFTER MAKING CONNECTION, TUCK EXCESS WIRE AND CONNECTOR BEHIND STRIKER BRACKET.

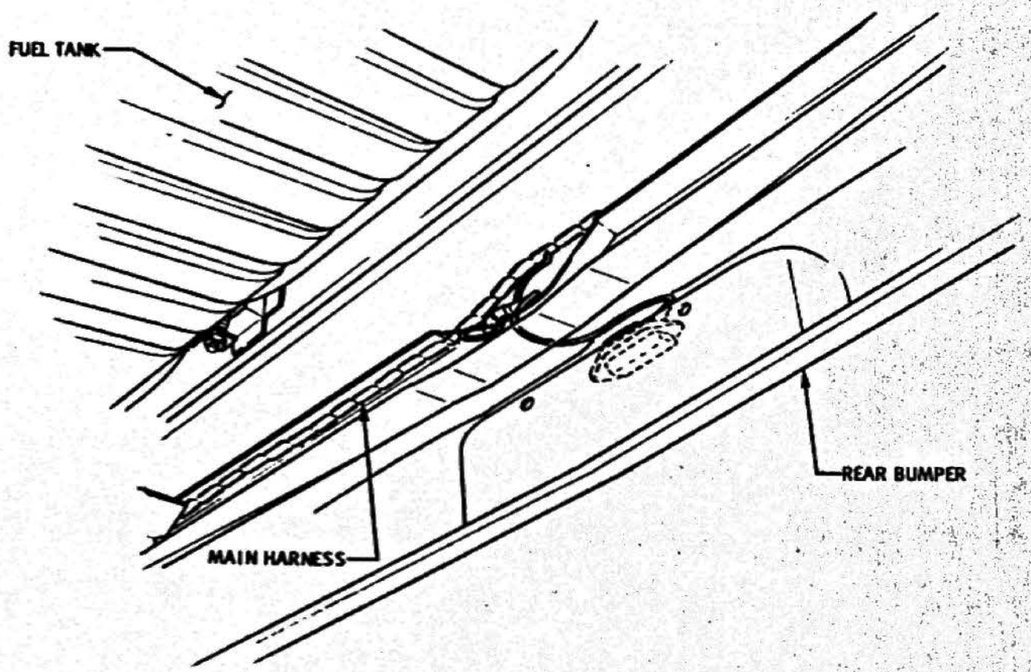

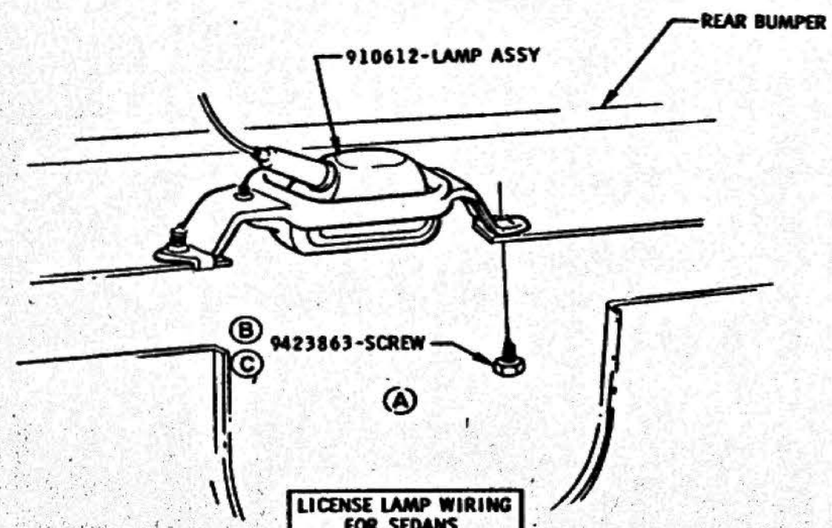

LICENSE LAMP WIRING FOR SEDANS

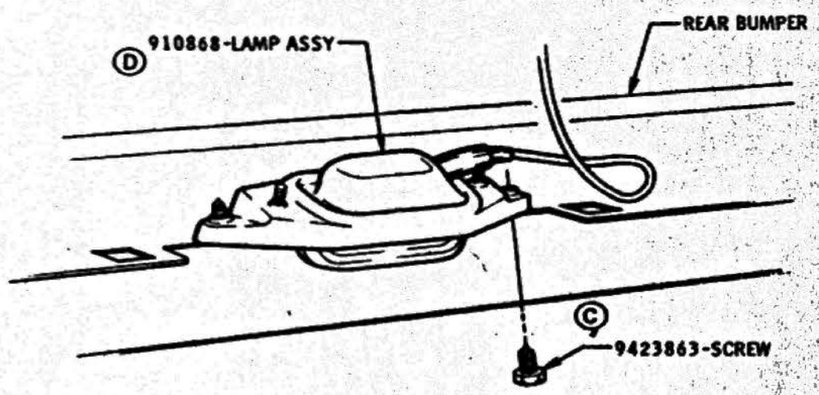

LICENCE LAMP WIRING FOR STATION WAGONS

DATE	SYM	REVISION	DR.	CK.	DATE	SYM	REVISION	DR.	CK.	DATE	SYM	REVISION	DR.	CK.
										4-28-65	D	WAS 910275 LAMP ASS'Y	LK	VP
										4-28-65	C	WAS 9416982 SCREW	LK	VP
										6-29-64	B	WAS 9419505	JD	
										6-19-64	A	REINF. REMOVED	BF	VP

INSTALLATION
DATE MAY 25, 1964
DR. BY C.E. MAY
CHECKED H. VAN PELT
APPR.
APPR.

ELECTRICAL

FIRST USED 1965

Oldsmobile graphic ILLUSTRATION

SERIES F85

REF. 12

PAGE 12-3.15

PART NO. 386799

OLDSMOBILE DIVISION GENERAL MOTORS CORPORATION LANSING 21, MICHIGAN

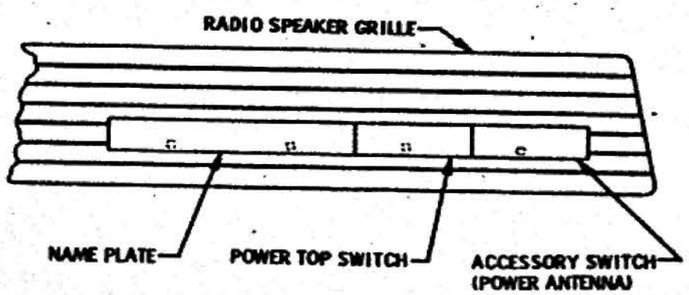

POWER TOP SWITCH LOCATION WITH ACCESSORY SWITCH

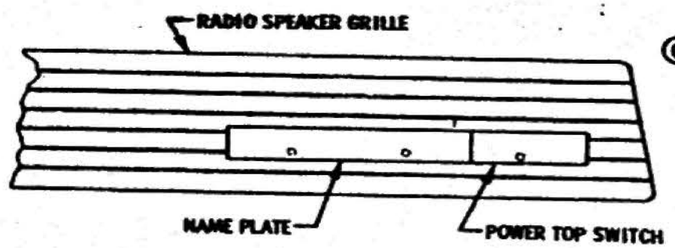

POWER TOP SWITCH LOCATION

Ⓒ NOTE:
DRILL .180 DIA. HOLES AT DIMPLES FOR NAME PLATES, POWER REAR WINDOWS, POWER TOP, AND POWER ANTENNA SWITCH INSTALLATIONS PER DRAWING BD-34905.

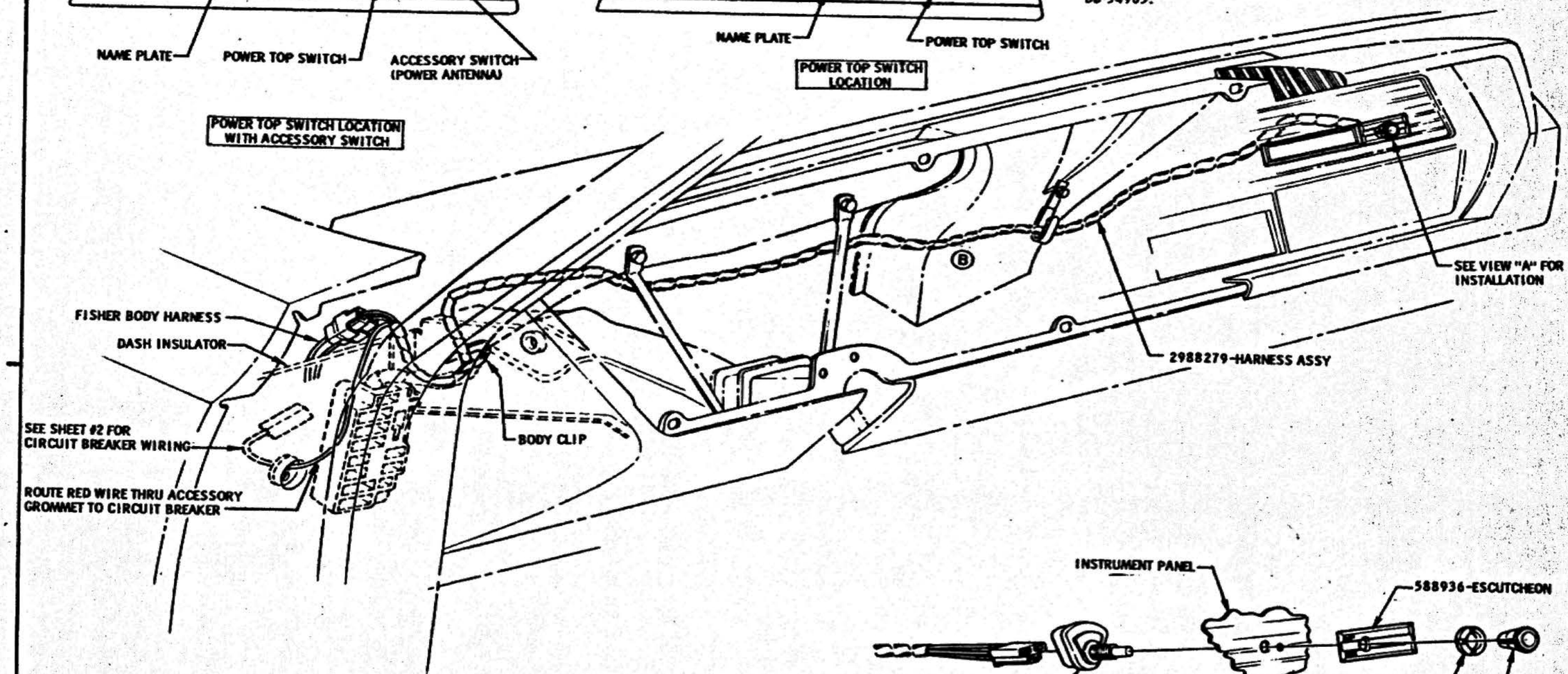

POWER TOP SWITCH AND WIRING INSTALLATION

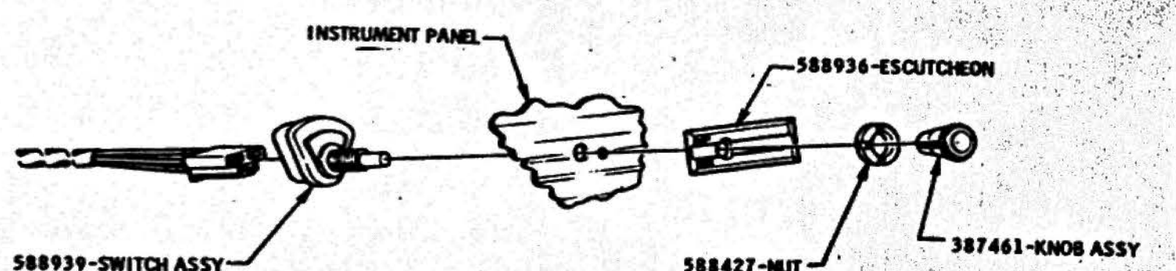

VIEW "A"

CONVERTIBLES ONLY

DATE	SYM	REVISION	DR.	CK.	DATE	SYM	REVISION	DR.	CK.	DATE	SYM	REVISION	DR.	CK.
										4-7-65	B	588036 CLIP REMOVED	GV	VP
										7-2-64	A	DRILLING NOTE ADDED	GV	VP

INSTALLATION	ELECTRICAL		
DATE MAY 25, 1964	FIRST USED 1965	Oldsmobile GRAPHIC ILLUSTRATION	PAGE 12-3.16
DR. BY C.L. MAY			
CHECKED H. VAN PELT	SERIES F85	REF. 12	PART NO. 386799
APPR.			
APPR.			

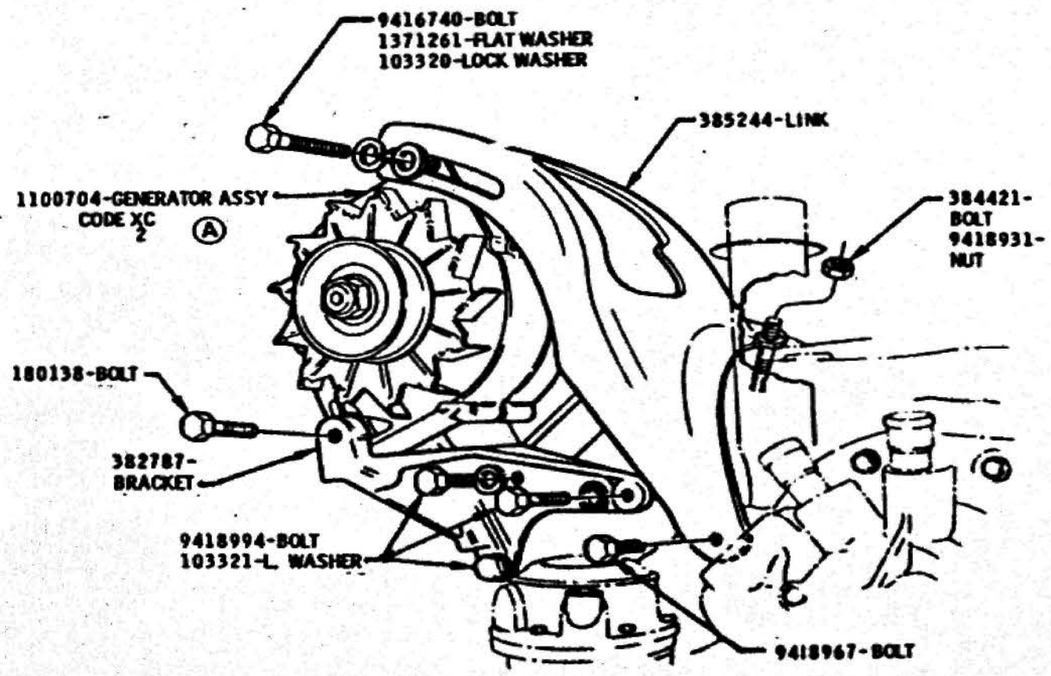

INSTALLATION OF GENERATOR, BRACKET AND LINK

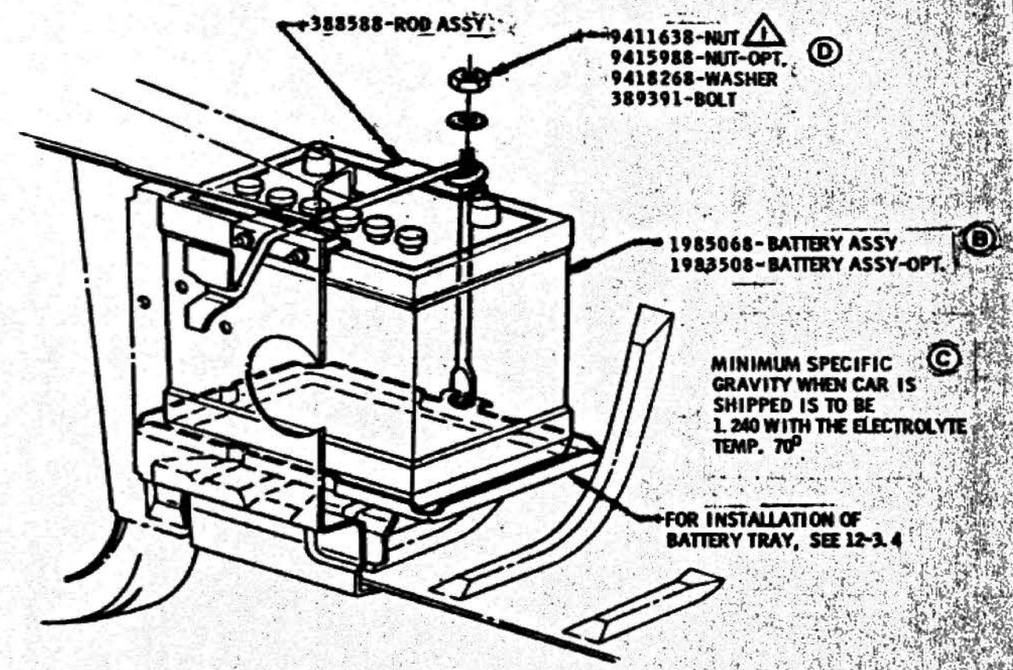

BATTERY INSTALLATION

1 T.S-2.5 FT. LBS.

FOR 442 CARS ONLY

DATE	SYM	REVISION	DR.	CK.	DATE	SYM	REVISION	DR.	CK.	DATE	SYM	REVISION	DR.	CK.
										4-28-65	D	HAS 9417954 NUT	CG	WP
										12-28-64	C	SPEC. GRAVITY NOTE ADDED	BA	WP
										12-28-64	B	1985068-OPT. ADDED	BA	WP
										7-17-64	A	CODE ADDED	BA	WP

INSTALLATION
DATE JULY 8, 1964
DR. BY C.E. MAY
CHECKED H. VAN PELT
APPR. D. SHUFRANCE
APPR.

ELECTRICAL

FIRST USED 1965 | Oldsmobile Graphic Illustration | PAGE 12-3.17

MODEL F85 | SUP. 85W 89 | PART NO. 386799

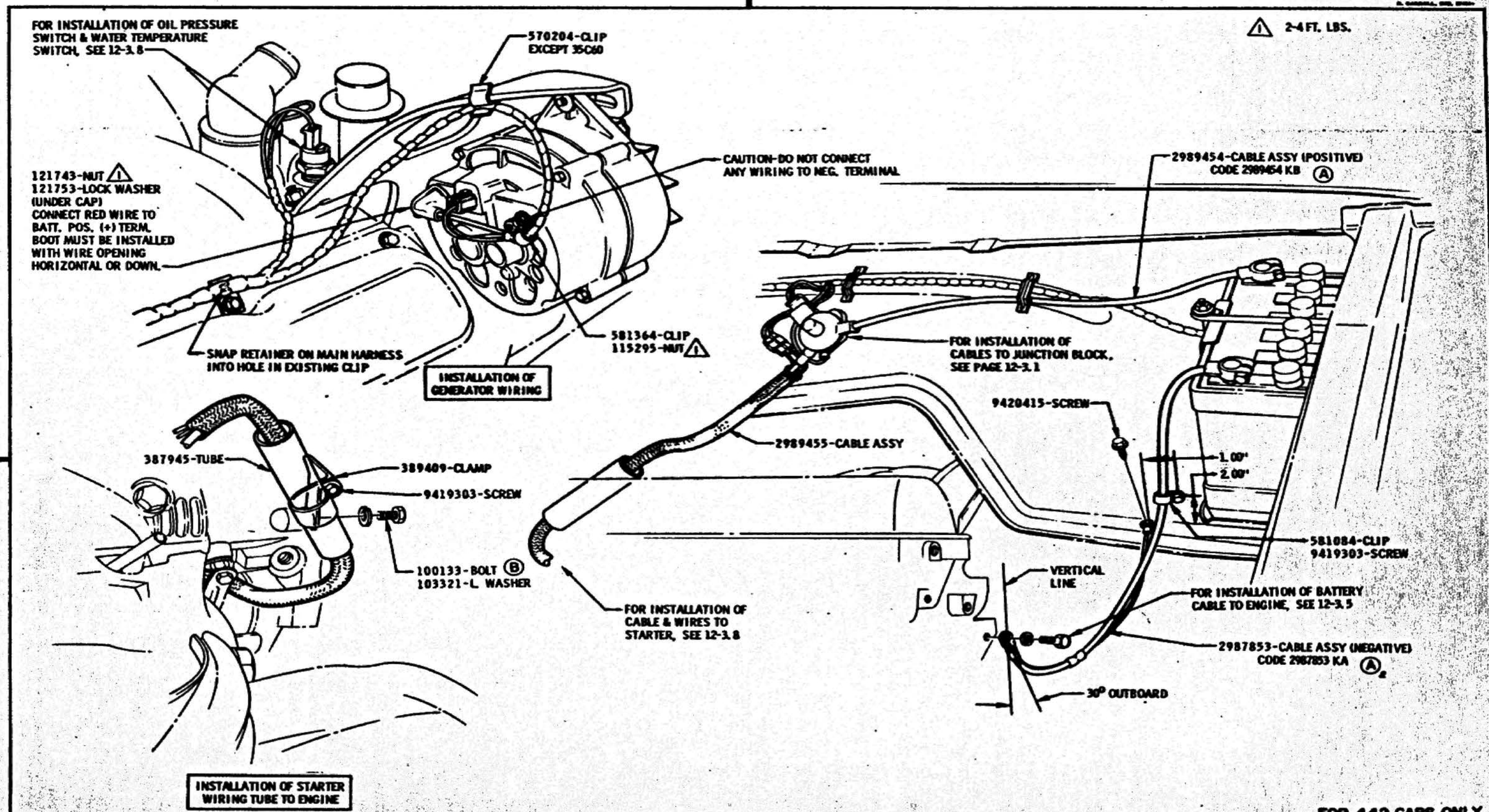

DATE	SYM	REVISION	DR.	CK.	DATE	SYM	REVISION	DR.	CK.	DATE	SYM	REVISION	DR.	CK.
										11-9-64	B	MARS 100119-SCREW	OMVD	
										7-17-64	A	CODE ADDED		

INSTALLATION	ELECTRICAL		
DATE JULY 8, 1964	FIRST USED 1965	Oldsmobile Service ILLUSTRATION	PAGE 12-3.18
DR. BY C.E. MAY			
CHECKED H. VAN PELT	SERIES F85	REF. 35W49	PART NO. 386799
APPR.			
APPR.			

OLDSMOBILE DIVISION GENERAL MOTORS CORPORATION LANSING 21, MICHIGAN

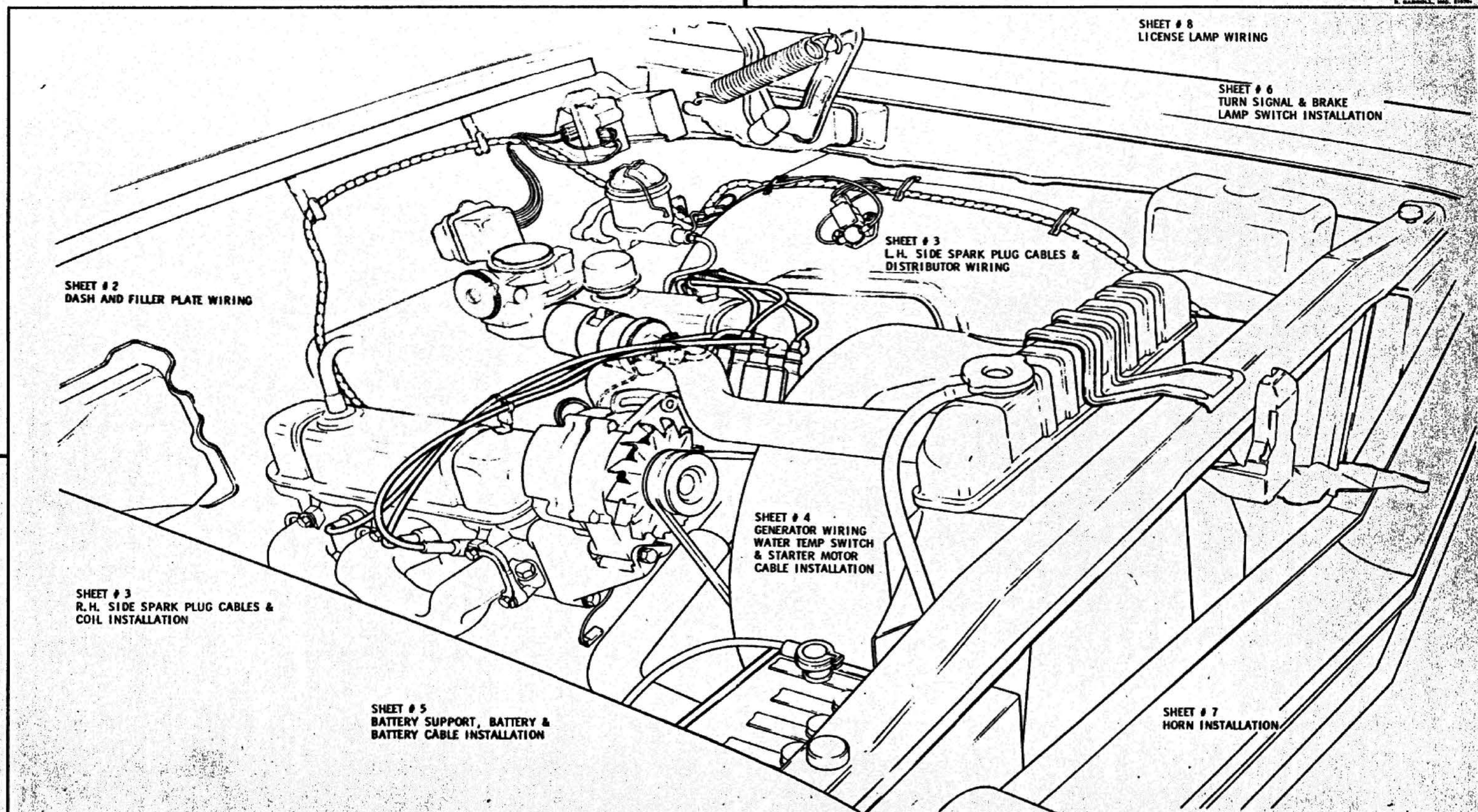

INSTALLATION	ELECTRICAL-V-6		
DATE DEC. 13, 1963	FIRST USED 1965	Oldsmobile GRAPHIC ILLUSTRATION	PAGE 12-4.1
DR. BY C. E. MAY			
CHECKED H. VAN PELT	SERIES F85	REF.	PART NO. 386798
APPR.			

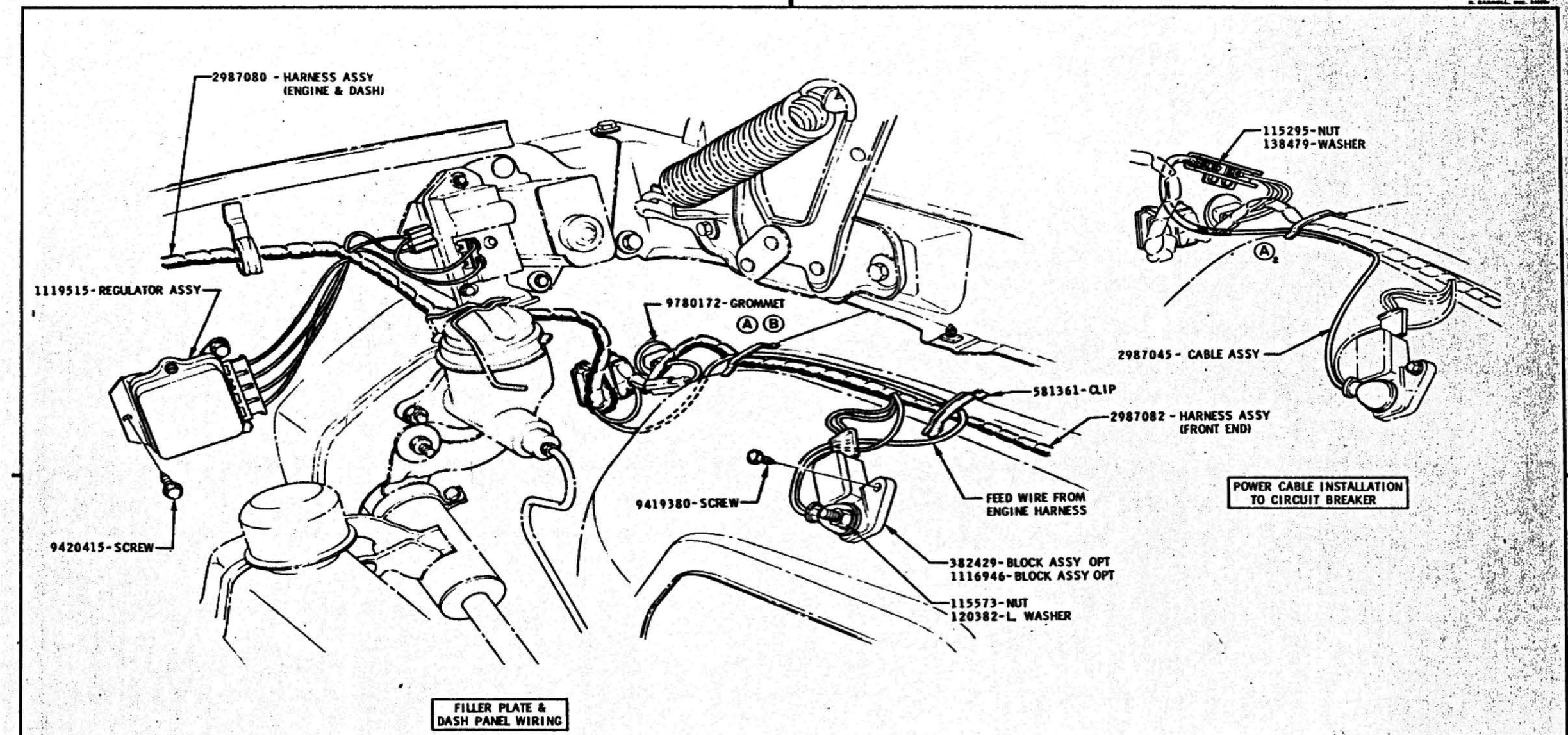

DATE	SYM	REVISION	DR.	CK.	DATE	SYM	REVISION	DR.	CK.	DATE	SYM	REVISION	DR.	CK.
										3-20-64	B	NAS 3717089 GROMMET	CB	VP
										2-27-64	A	NAS 3773044-GROMMET	CB	VP

INSTALLATION	ELECTRICAL-V-6		
DATE DEC. 13, 1963	FIRST USED 1965	Oldsmobile Graphic Illustration	PAGE 12-4.2
DR. BY C. E. MAY			
CHECKED H. VAN PELT	SERIES F85	REF. 6W 12H	PART NO. 386798
APPR.			
APPR.			

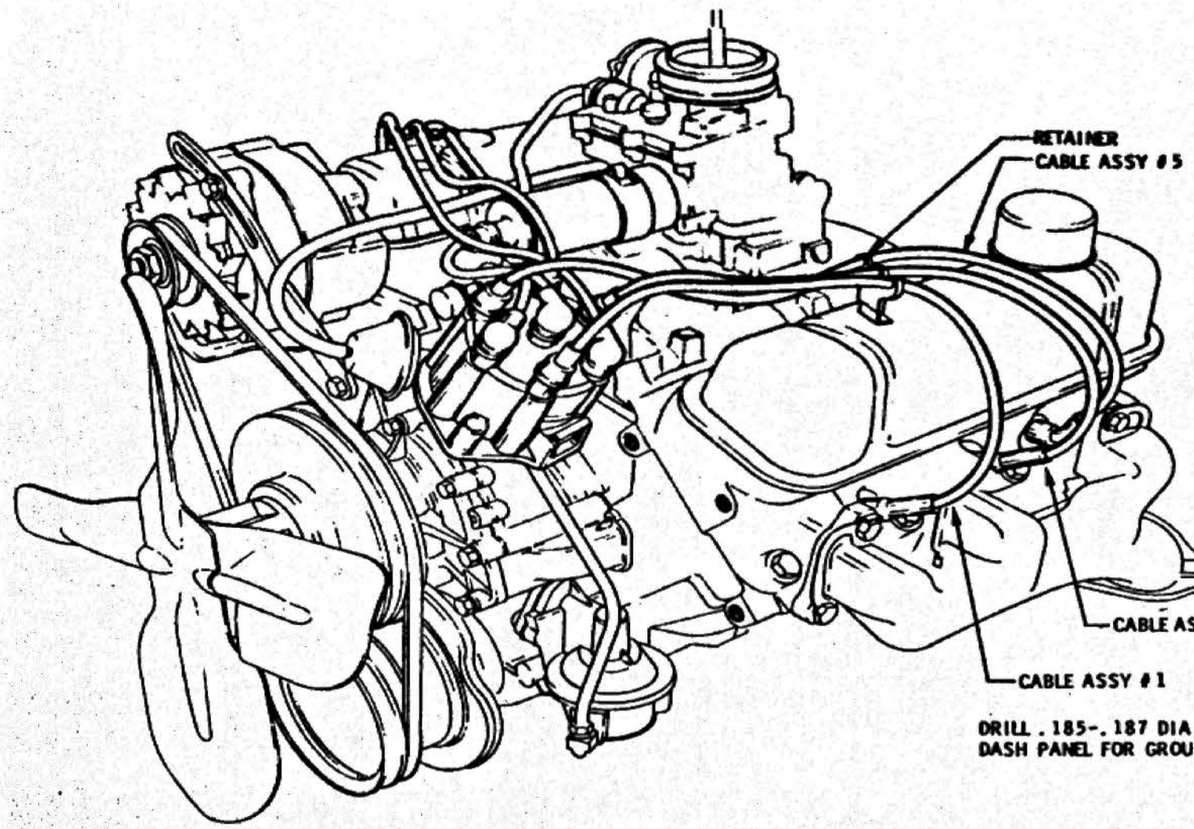

VIEW OF ENGINE L.H. SIDE

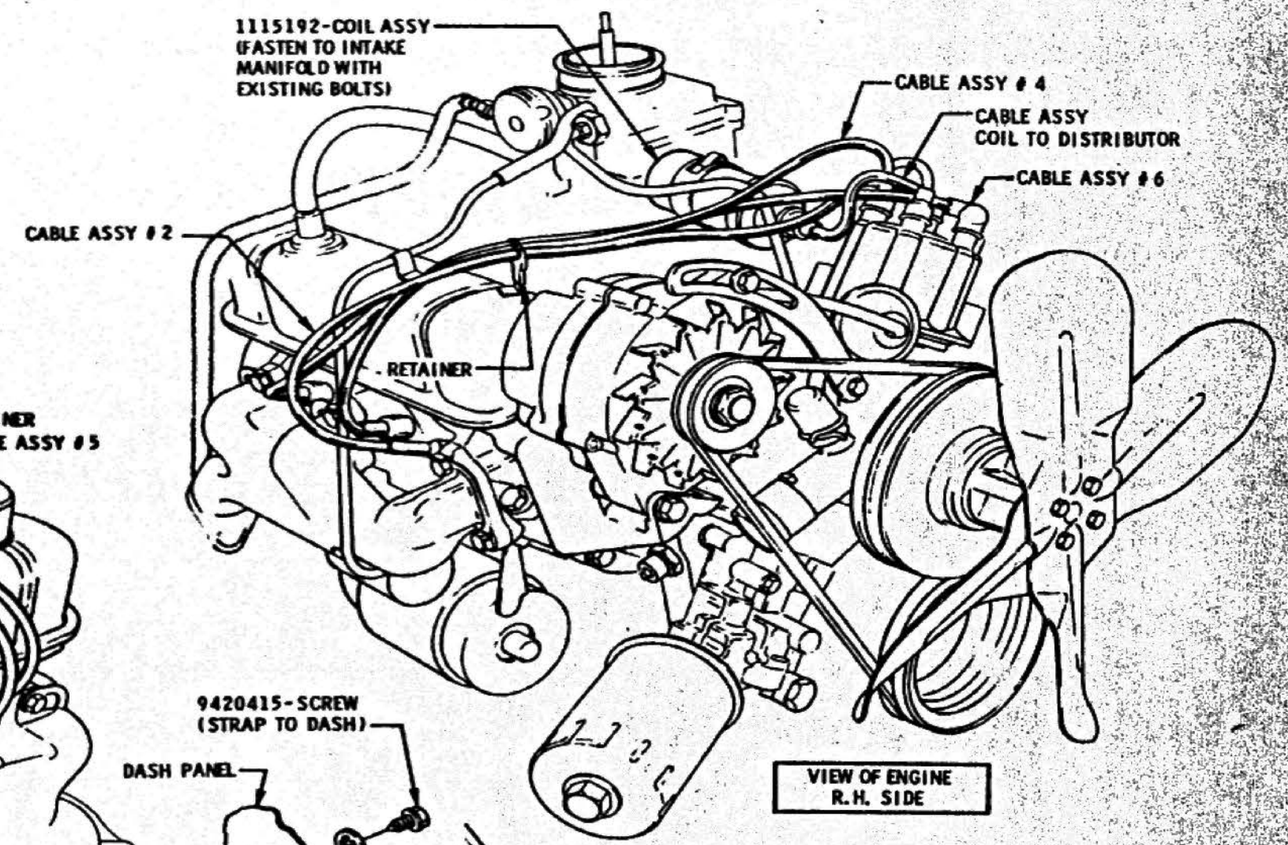

VIEW OF ENGINE R.H. SIDE

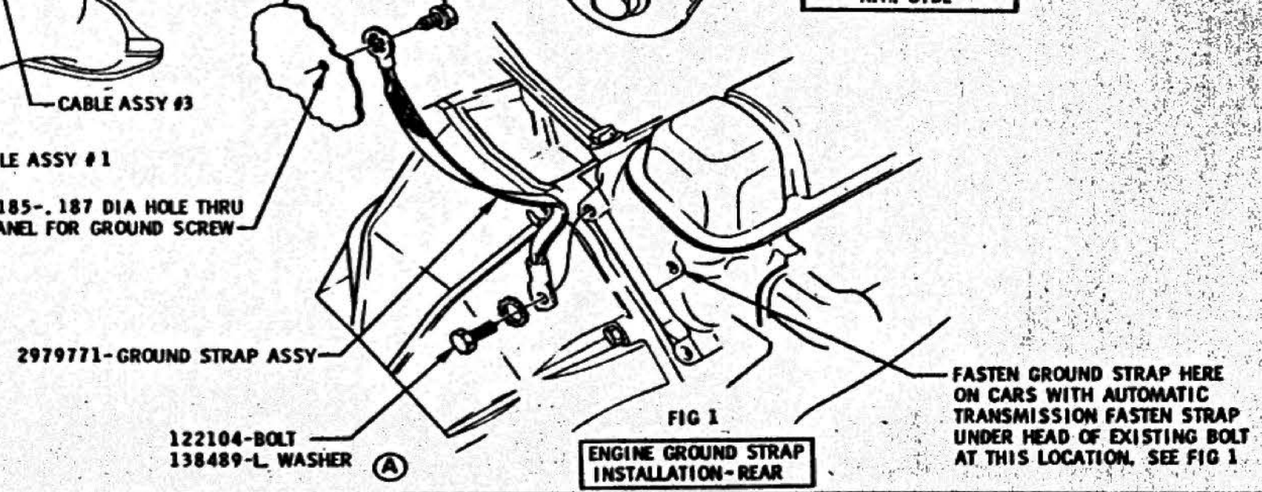

FIG 1

ENGINE GROUND STRAP INSTALLATION-REAR

DATE	SYM	REVISION	DR.	CK.	DATE	SYM	REVISION	DR.	CK.	DATE	SYM	REVISION	DR.	CK.
										4-16-64	B	PART NO'S REMOVED	MB	VD
										2-11-64	A	WAS 120382 L. WASHER	MB	VD

INSTALLATION ELECTRICAL - V-8

DATE DEC. 13 1968
DR. BY C. E. MAY
CHECKED H. VAN PELT
APPR.
APPR.

FIRST USED 1965

Oldsmobile GRAPHIC ILLUSTRATION

SERIES F85

REF. 6Y4

PAGE 12-4.3

PART NO. 386798

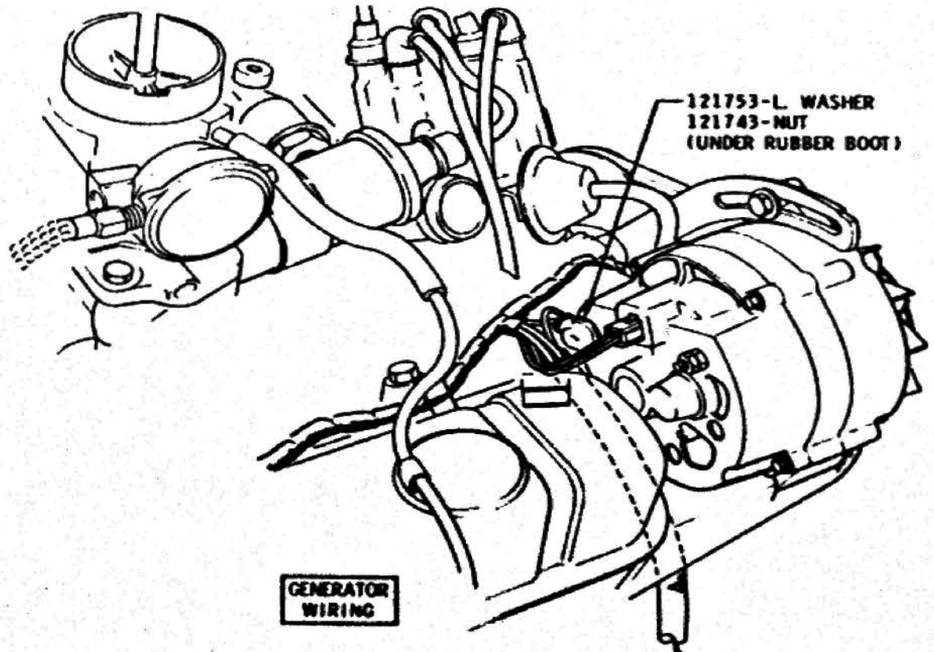

GENERATOR WIRING

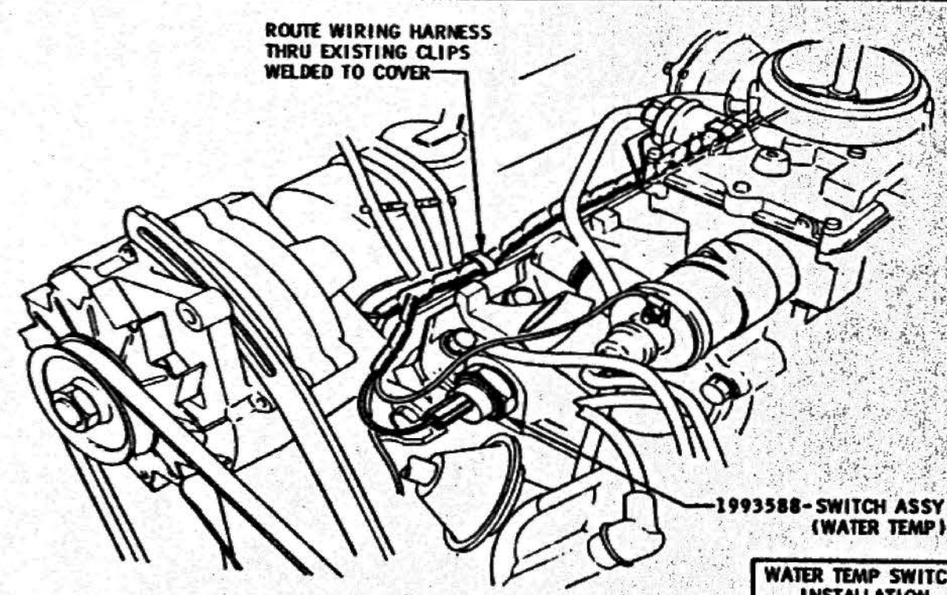

WATER TEMP SWITCH INSTALLATION

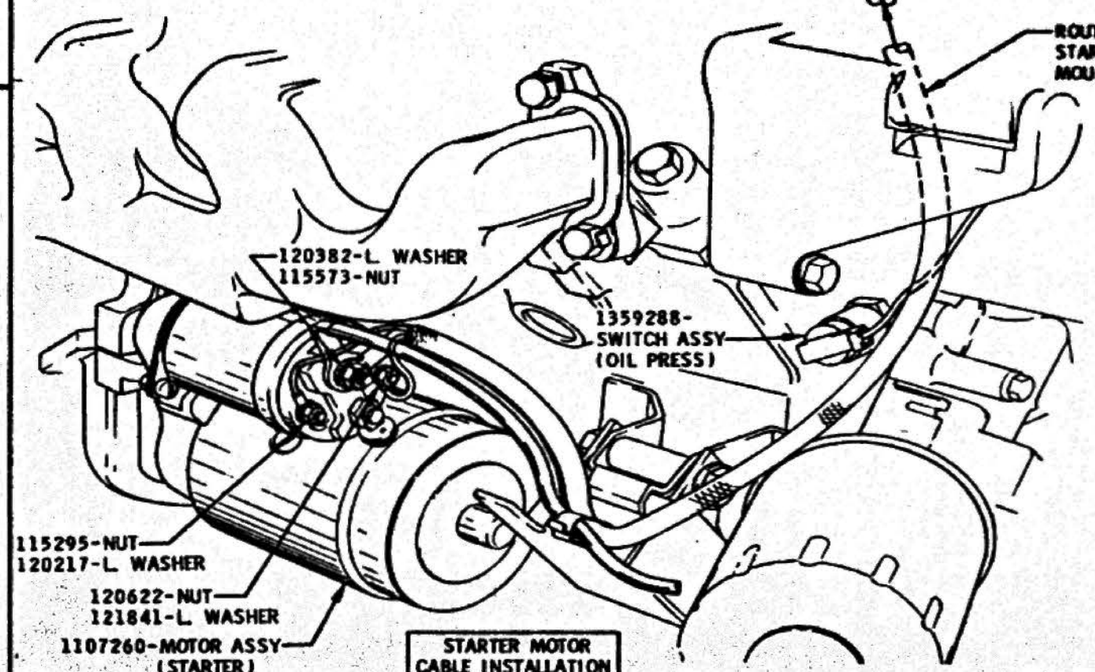

STARTER MOTOR CABLE INSTALLATION

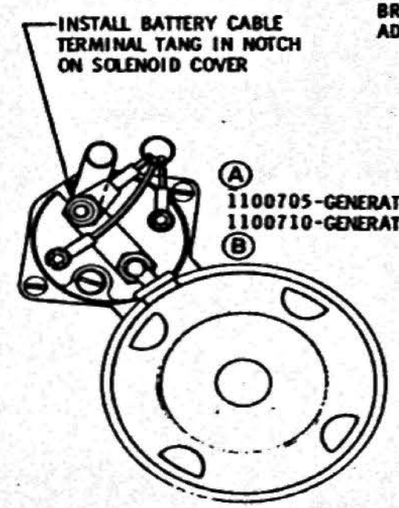

VIEW IN DIRECTION OF ARROW

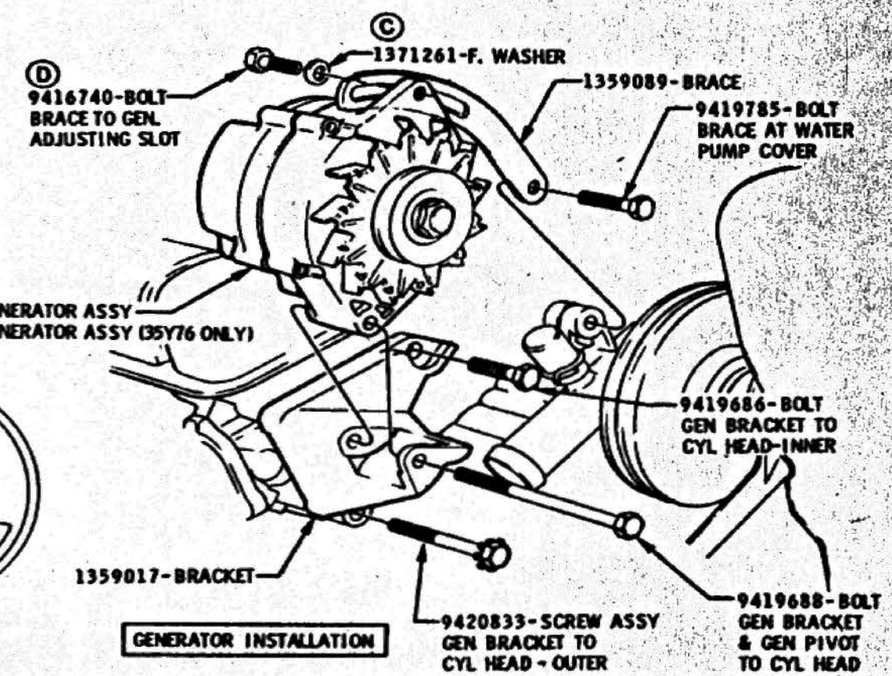

GENERATOR INSTALLATION

DATE	SYM	REVISION	DR.	CK.	DATE	SYM	REVISION	DR.	CK.	DATE	SYM	REVISION	DR.	CK.
										5-13-64	D	9416740 WAS 9418991		
										5-13-64	C	1371261 WAS 9419275		
										5-11-64	B	1100710-GEN. ADDED		
										2-11-64	A	WAS 1100663 GEN.		

INSTALLATION

DATE DEC. 13. 1963
DR. BY C. E. MAY
CHECKED H. VAN PELT
APPR.
APPR.

ELECTRICAL - V-6

FIRST USED 1965

Oldsmobile GRAPHIC ILLUSTRATION

SERIES F85

REF. 12A 6Y1

PAGE 12-4.4

PART NO. 386798

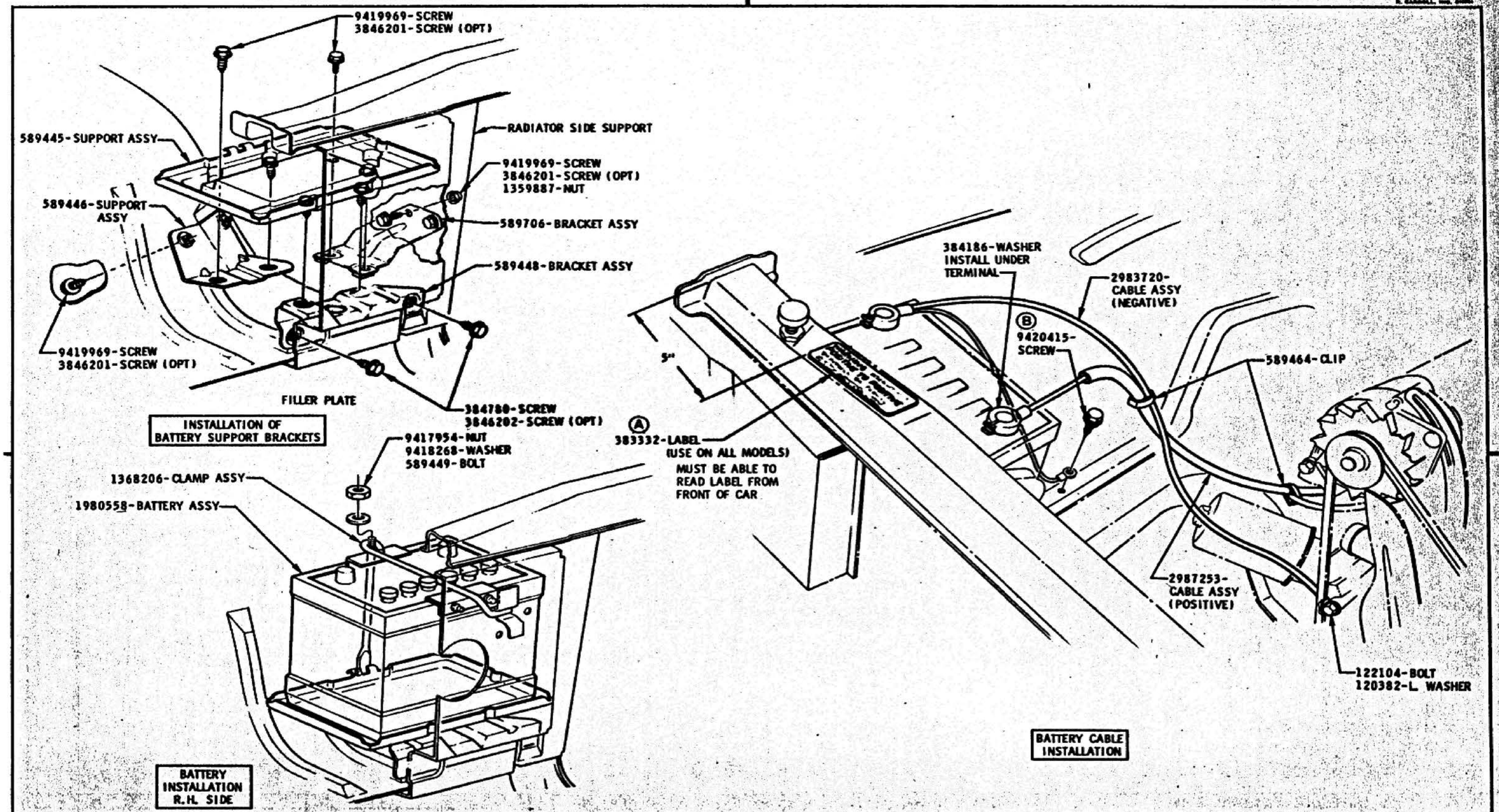

DATE	SYM	REVISION	DR.	CK.	DATE	SYM	REVISION	DR.	CK.	DATE	SYM	REVISION	DR.	CK.
										4-20-64	B	WAS 563358 SCREW	RWM	
										9-11-64	A	LABEL ADDED	CMVP	

INSTALLATION	ELECTRICAL-V-6		
DATE DEC. 15, 1963	FIRST USED 1965	Oldsmobile GRAPHIC ILLUSTRATION	PAGE 12-4.5
DR. BY C.C. MAY			
CHECKED H. VAN PELT	SERIES F85	REF. 12A-12B	PART NO. 386798
APPR.			
APPR.			

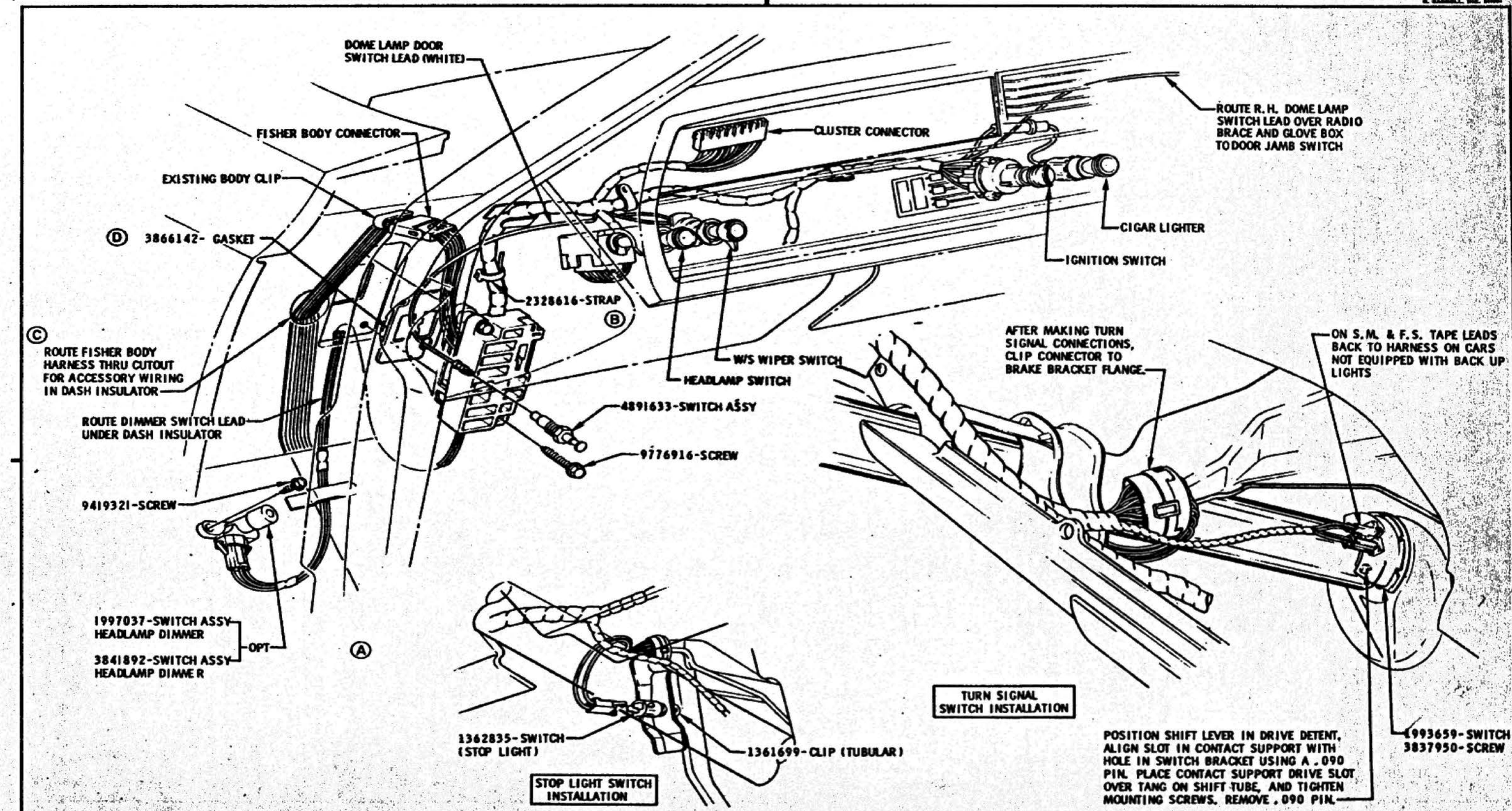

DATE	SYM	REVISION	DR.	CK.	DATE	SYM	REVISION	DR.	CK.	DATE	SYM	REVISION	DR.	CK.
										4-16-64	D	WAS 3840987	RS	VP
										9-08-64	C	FISHER HARN. REL'D.	OM	VP
										2-25-64	B	2328616 STRAP ADDED	CA	VP
										1-4-64	A	VIEW ADDED	OM	DI

INSTALLATION — ELECTRICAL - V-6

DATE DEC. 13, 1963
DR. BY C.C. MAY
CHECKED H. VAN PELT
APPR.
APPR.

FIRST USED 1965 — Oldsmobile GRAPHIC ILLUSTRATION — PAGE 12-4.6

SERIES F85 — REV. 12 H — PART NO. 386798

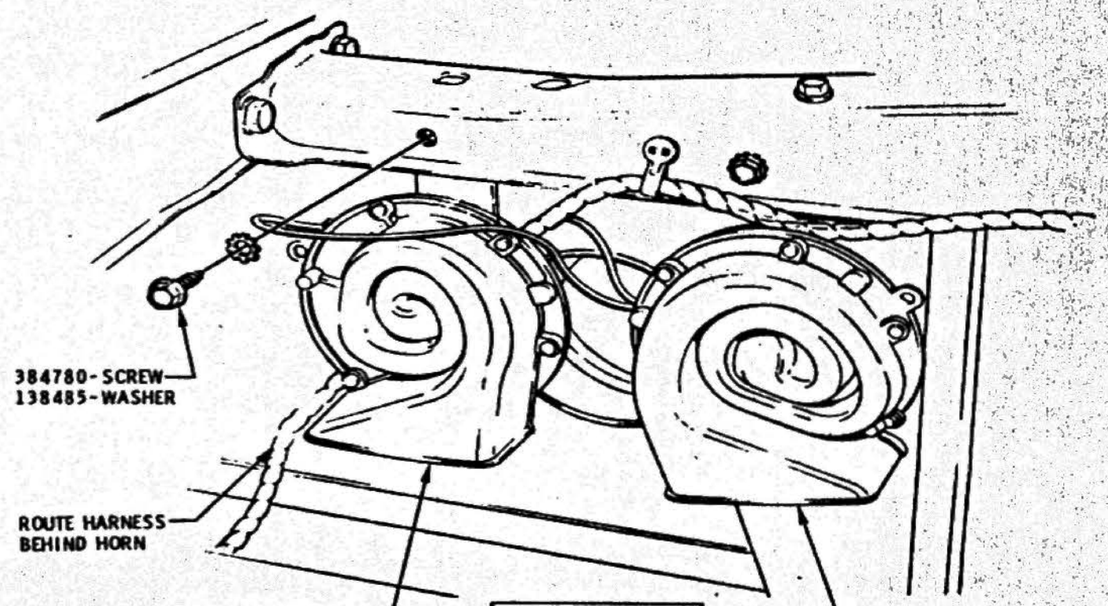

HORN INSTALLATION
L.H. SIDE

INSTALLATION	ELECTRICAL - V-6		
DATE DEC. 13, 1963	FIRST USED 1965	Oldsmobile GRAPHIC ILLUSTRATION	PAGE 12-4.7
DR. BY C.E. MAY			
CHECKED H. VAN PELT	SERIES F85	REF.	PART NO. 386798
APPR			

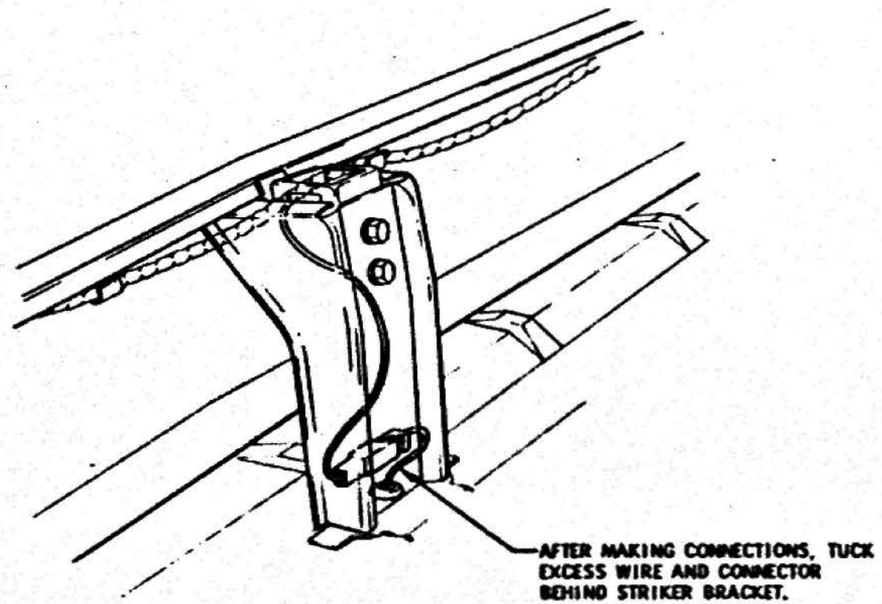

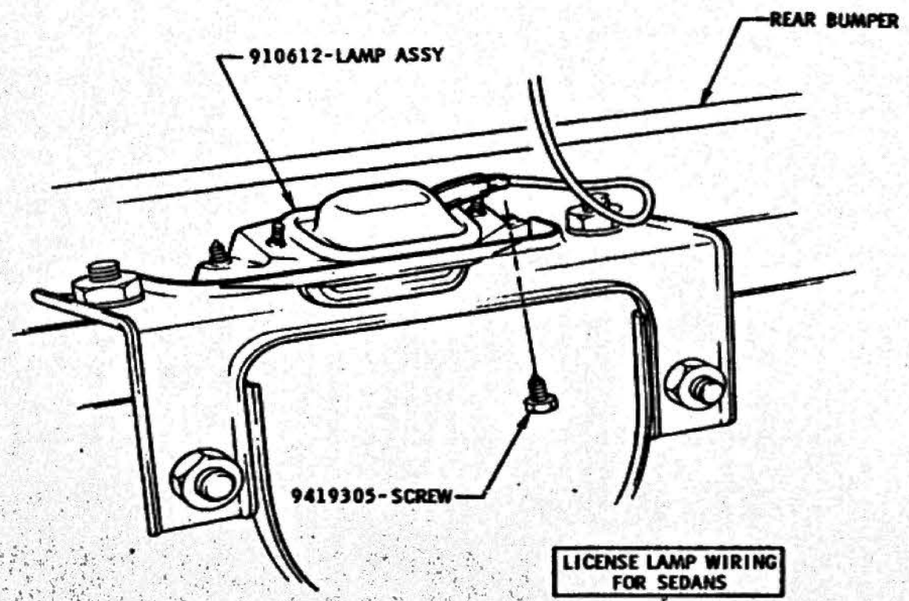

LICENSE LAMP WIRING FOR SEDANS

INSTALLATION	ELECTRICAL -V-6		
DATE DEC. 13, 1964	FIRST USED 1965	Oldsmobile Graphic Illustration	PAGE 12-4.8
DR. BY C. E. MAY			
CHECKED H. VAN PELT			
APPR	SERIES	REF.	PART NO. 386798

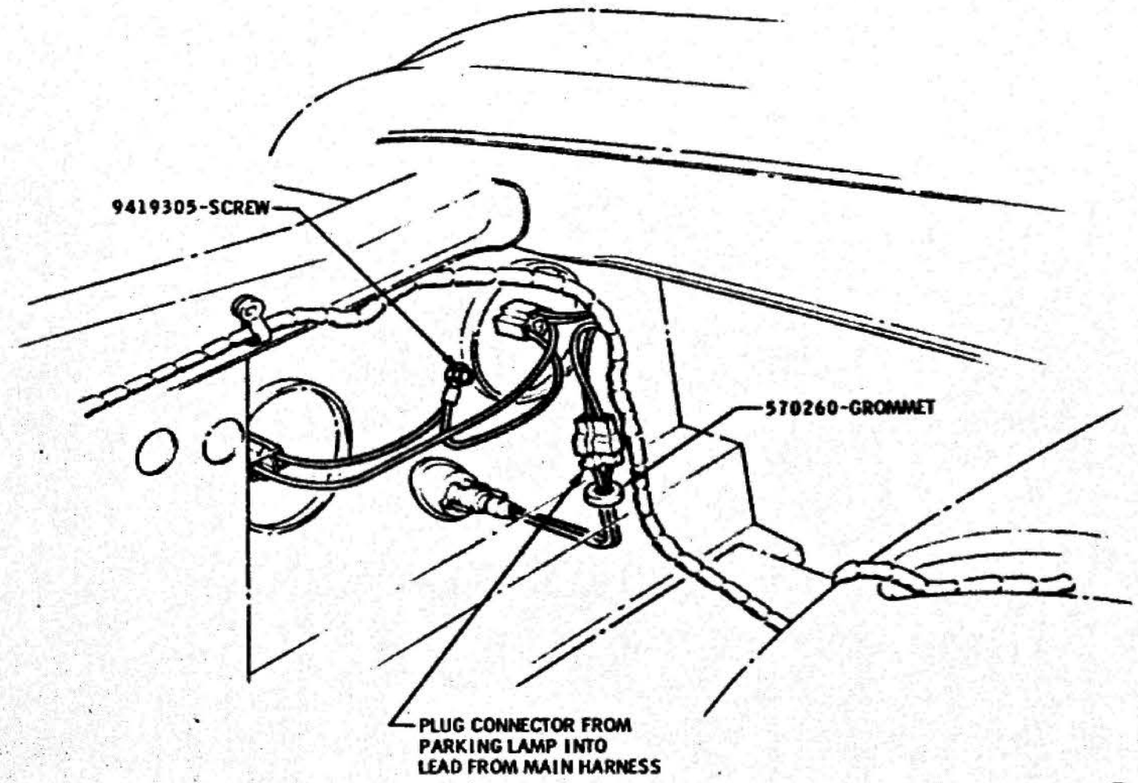

HEAD LAMP AND TURN SIGNAL WIRING R.H. SIDE

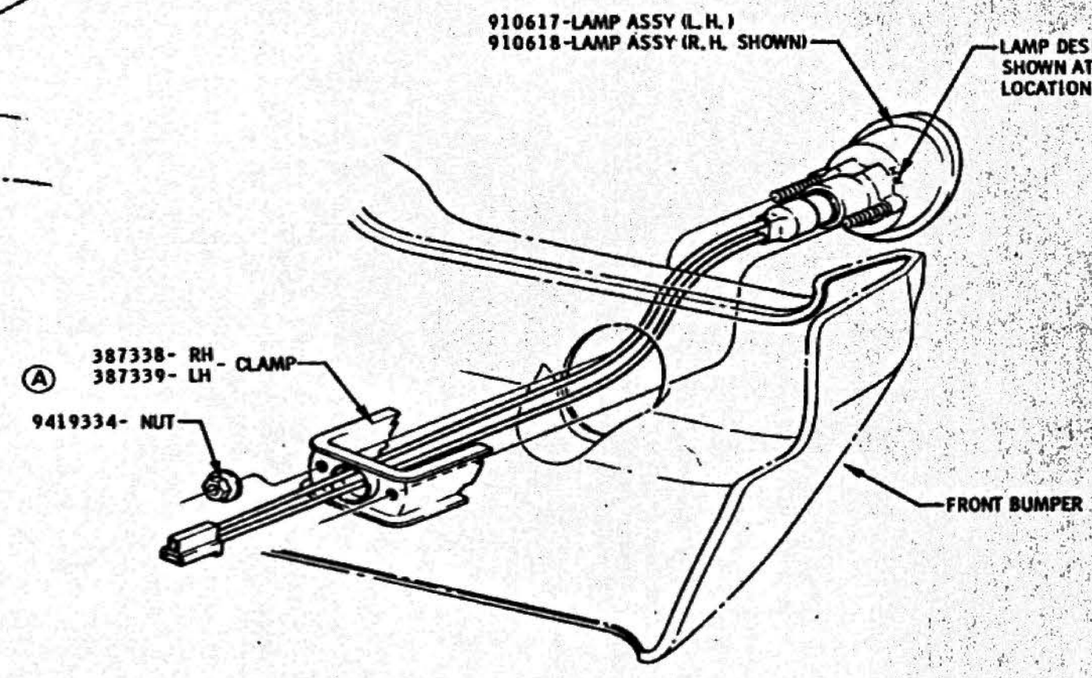

TURN SIGNAL LAMP INSTALLATION R. H. SIDE

DATE	SYM	REVISION	DR	CK	DATE	SYM	REVISION	DR	CK	DATE	SYM	REVISION	DR	CK
										4-16-64	A	PART NO'S. ADDED	PS	VP

INSTALLATION — ELECTRICAL – V-8

DATE DEC. 24, 1963
DR. BY C. E. MAY
CHECKED H. VAN PELT
APPR.
APPR

FIRST USED 1965 — Oldsmobile Graphic Illustration — PAGE 12-4.9

SERIES F85 — REF. 12 — PART NO. 386798

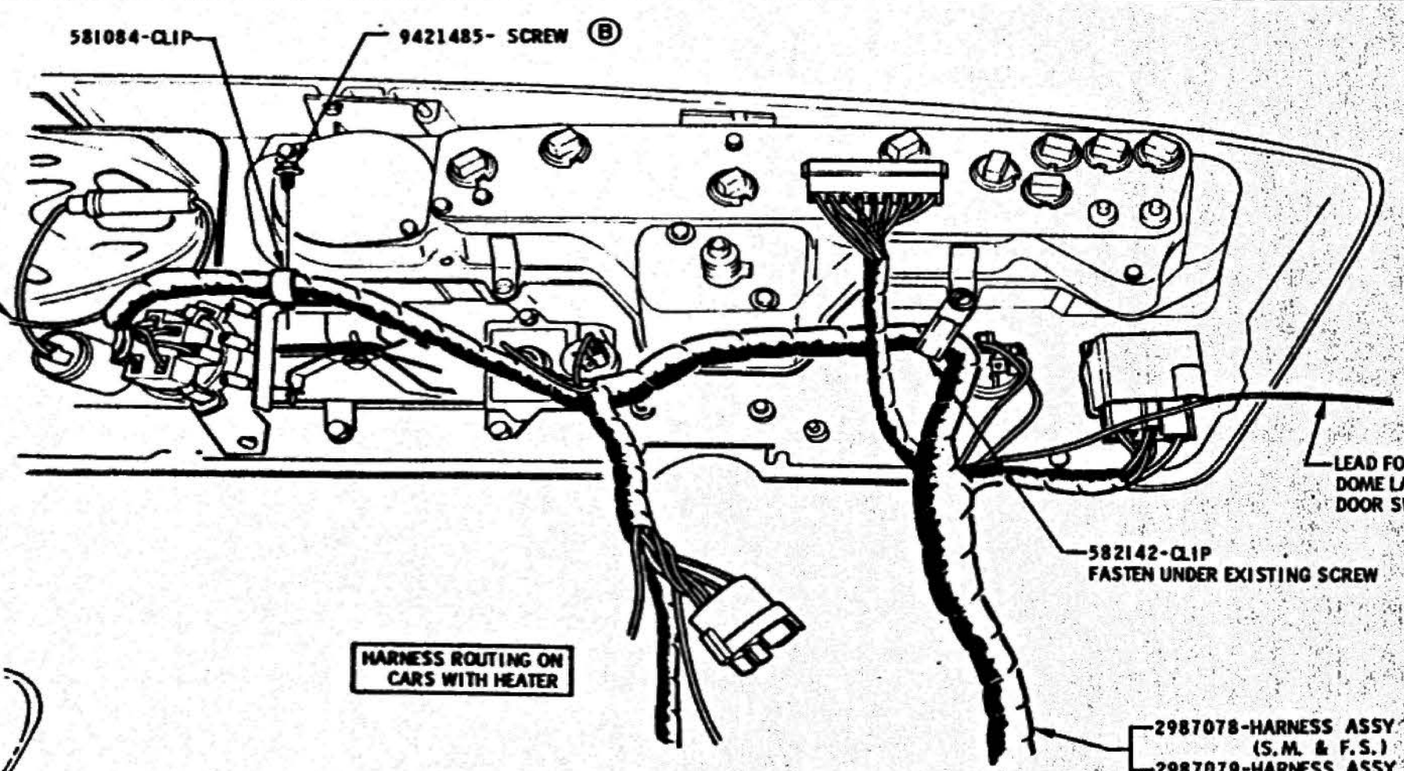

HARNESS ROUTING ON CARS WITH HEATER

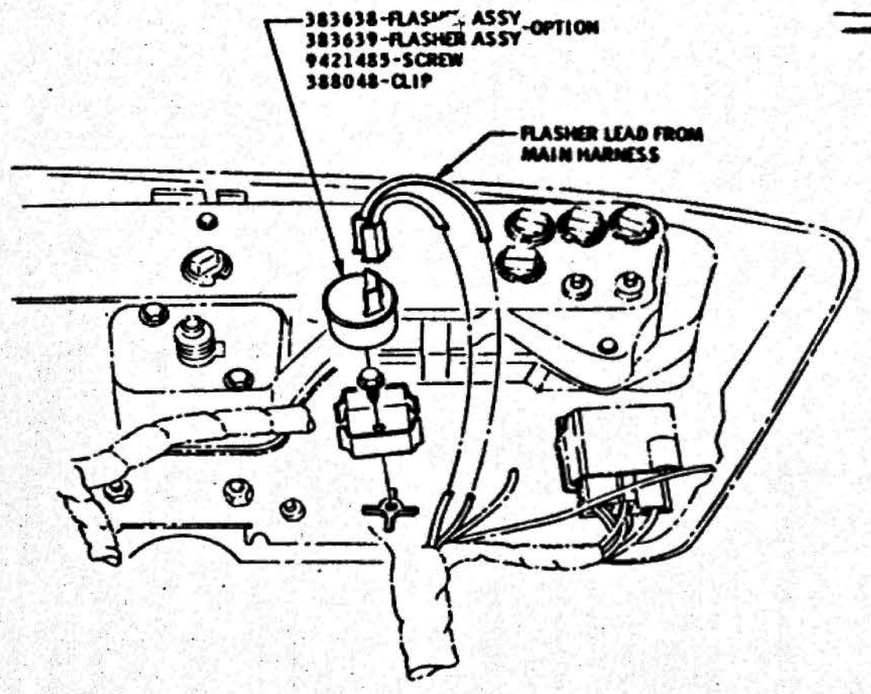

Ⓒ INSTALLATION OF TURN SIGNAL FLASHER TO INSTRUMENT PANEL

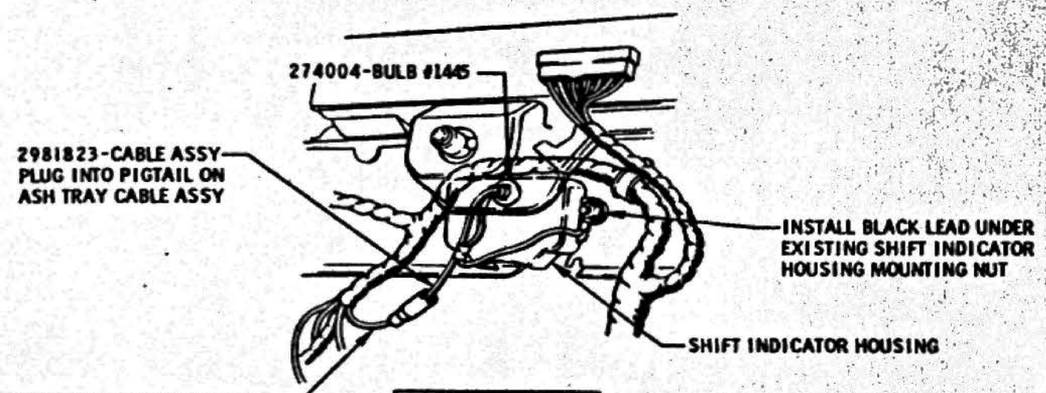

HMT INDICATOR LAMP INSTALLATION

DATE	SYM	REVISION	DR.	CK.	DATE	SYM	REVISION	DR.	CK.	DATE	SYM	REVISION	DR.	CK.
										4-16-64	C	NEW ADDED	OM	VD
										2-17-64	B	WAS 9419303 SCREW	CG	VD
										2-17-63	A	PAGE 17-4.10 WAS 12-3.10	BP	VD

INSTALLATION	ELECTRICAL -V6		
DATE DEC. 24, 1963	FIRST USED 1965	Oldsmobile GRAPHIC ILLUSTRATION	PAGE 12-4.10
DR. BY C. E. MAY			
CHECKED H. VAN PELT	SERIES F85	REF. 6V-4 12H	PART NO. 386798
APPR.			
APPR.			

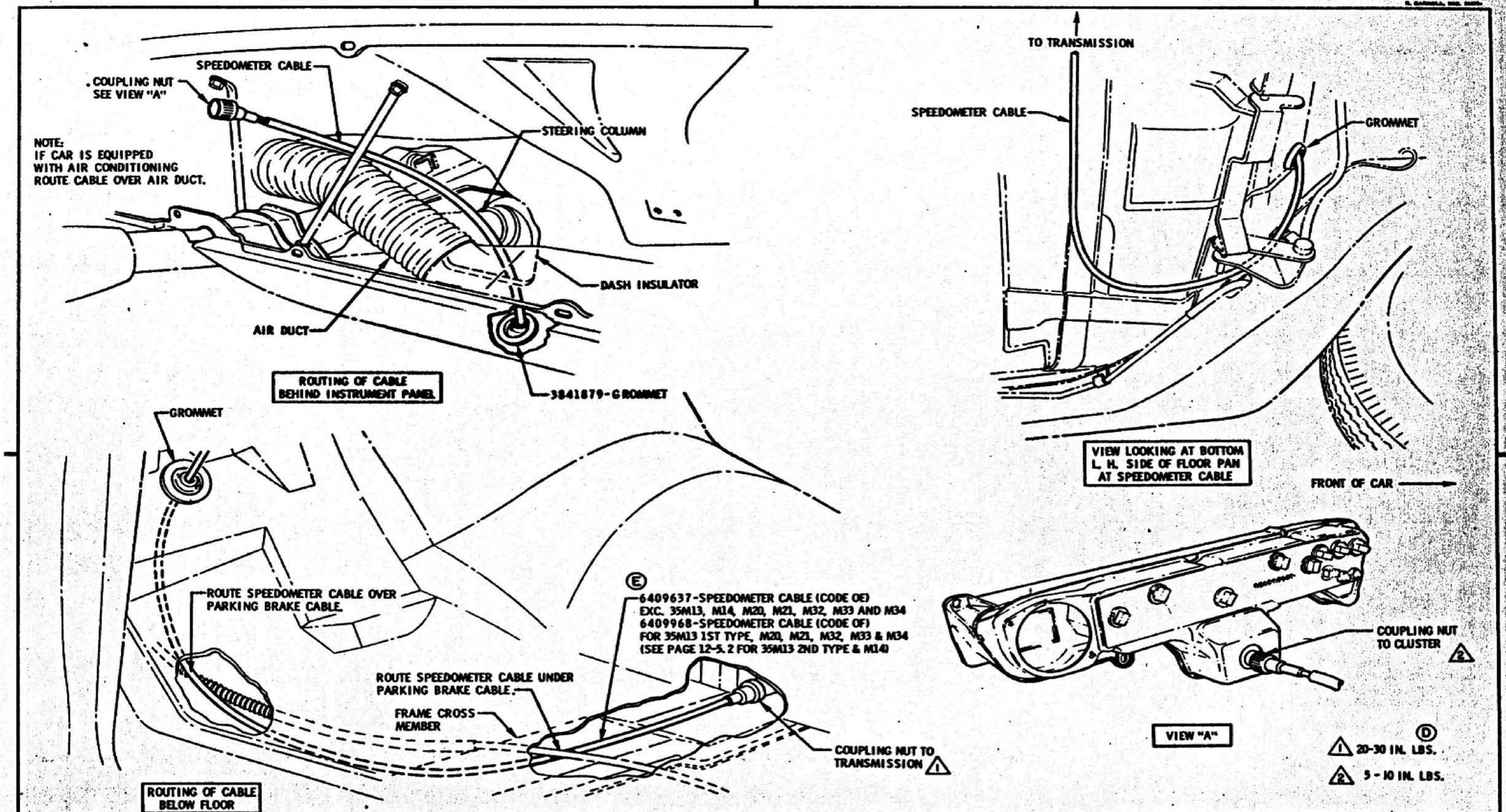

DATE	SYM	REVISION	DR.	CK.	DATE	SYM	REVISION	DR.	CK.	DATE	SYM	REVISION	DR.	CK.
										2-5-68	E	NOTE REVISED		VP
										9-9-64	D	WAS 20-80 FT. LBS.		VP
										7-21-64	C	CODE ADDED		VP
										6-16-64	B	VIEW ADDED		VP
										6-16-64	A	TORQUE ADDED		VP

INSTALLATION — SPEEDOMETER CABLE

DATE DEC. 11-1968
DR. BY C.E. MAY
CHECKED H. VAN PELT
APPR.
APPR.

FIRST USED 1965 — Oldsmobile Chassis Illustration

SERIES F85 — REF. 12-J

PAGE 12-5.1

PART NO. 387005

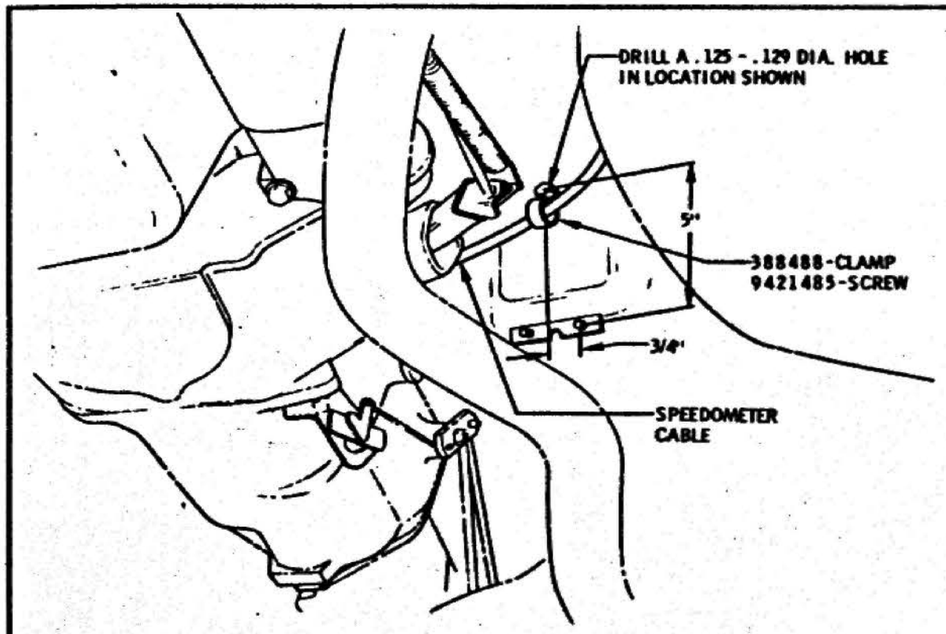

VIEW IN DIRECTION OF ARROW "A"

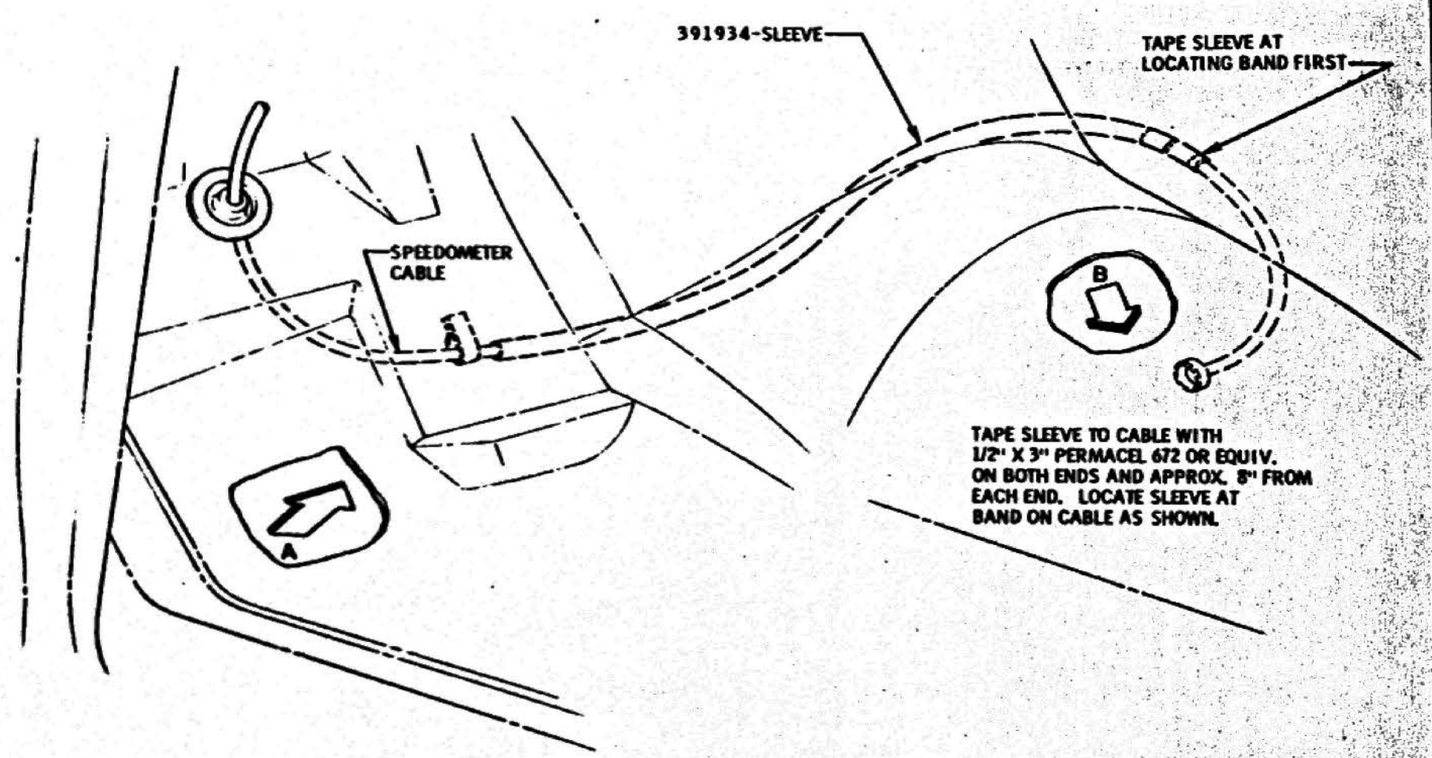

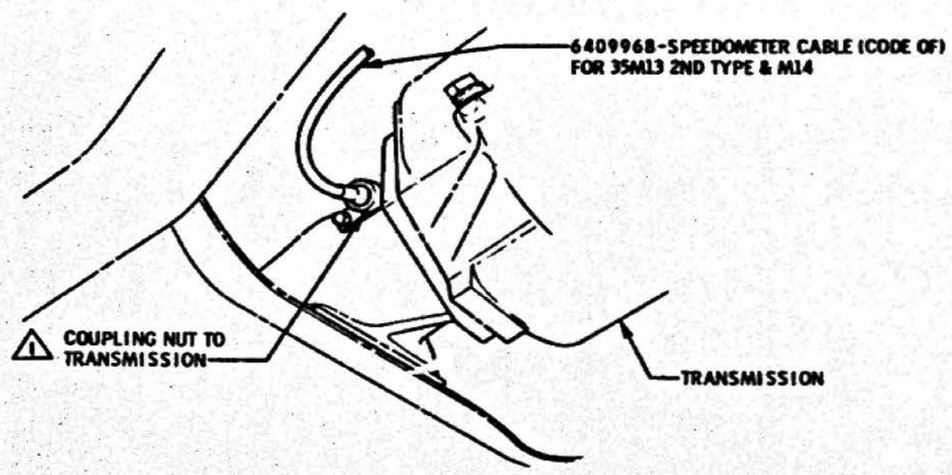

1 20 - 30 IN. LBS.

VIEW IN DIRECTION OF ARROW "B"

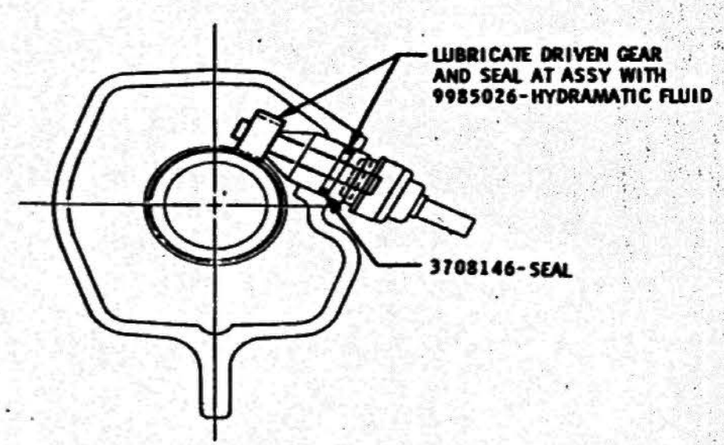

SECTION THROUGH SPEEDOMETER GEAR LOOKING FORWARD

SPEEDOMETER CABLE ROUTING FOR CARS WITH 35M13 & 14 OPTIONS

DATE	SYM	REVISION	DR.	CK.	DATE	SYM	REVISION	DR.	CK.	DATE	SYM	REVISION	DR.	CK.

INSTALLATION SPEEDOMETER CABLE

DATE JAN. 4, 1965
DR. BY JOE GALL
CHECKED H. VAN PELT
APPR.
APPR.

FIRST USED 1965
Oldsmobile Service ILLUSTRATION
SERIES F-85
REF. M13 M14
PAGE 12-5.2-
PART NO. 387005

OLDSMOBILE DIVISION GENERAL MOTORS CORPORATION LANSING 21, MICHIGAN

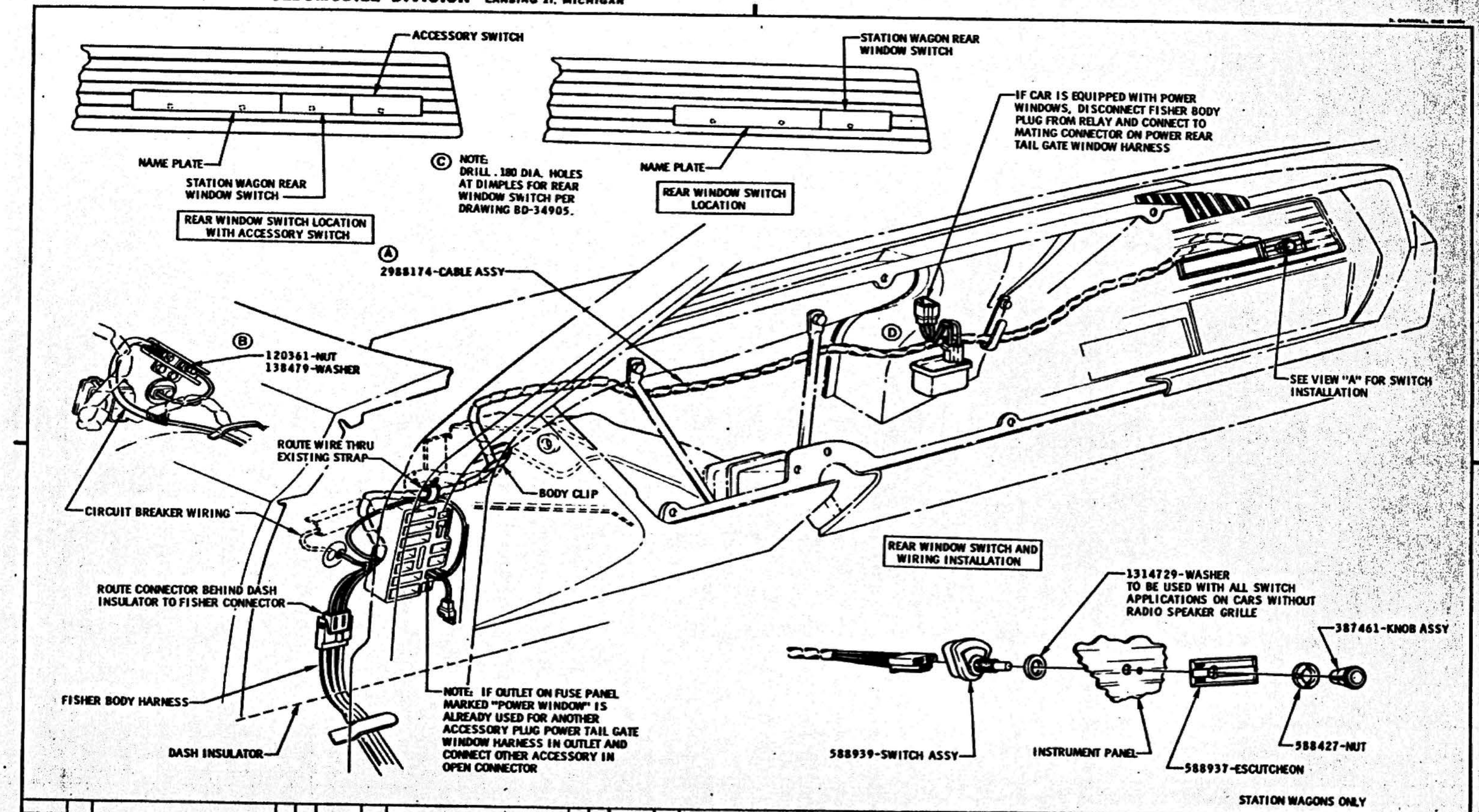

4-7-65	D	588036 CLIP REMOVED	GV	VP
7-2-64	C	DRILLING NOTE ADDED	BP	VP
5-28-64	B	WAS 115235-NUT	BP	VP
4-11-64	A	PART NO. ADDED	WM	VP

INSTALLATION
DATE JAN. 20, 1964
DR. BY C. E. MAY
CHECKED H. VAN PELT
APPR.

TAIL GATE WINDOW SWITCH

FIRST USED 1965 — Oldsmobile Service Graphic Illustration — PAGE 12-6.1

SERIES F-85 — REF. 95A99 — PART NO. 387571

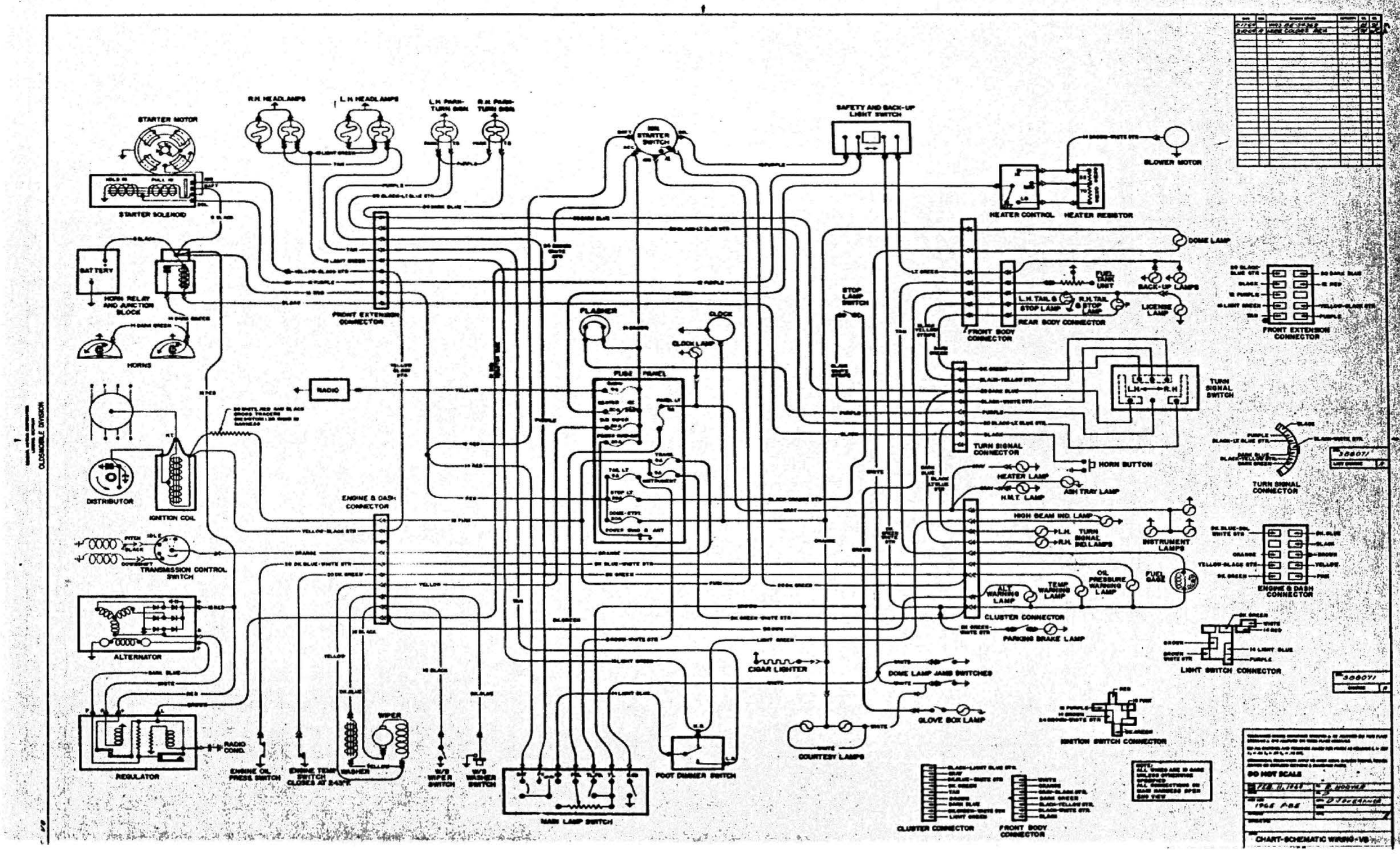
STARTER MOTOR
STARTER SOLENOID
R.H. HEADLAMPS
L.H. HEADLAMPS
L.H. PARK-TURN SIGN.
R.H. PARK-TURN SIGN.
BATTERY
HORN RELAY AND JUNCTION BLOCK
HORNS
FRONT EXTENSION CONNECTOR
RADIO
DISTRIBUTOR
IGNITION COIL
TRANSMISSION CONTROL SWITCH
ALTERNATOR
REGULATOR
RADIO COND.
ENGINE OIL PRESS. SWITCH
ENGINE TEMP. SWITCH CLOSES AT 243°F
ENGINE & DASH CONNECTOR
WASHER
WIPER
W/S WIPER SWITCH
W/S WASHER SWITCH
MAIN LAMP SWITCH
FLASHER
CLOCK
CLOCK LAMP
FUSE PANEL
FOOT DIMMER SWITCH
COURTESY LAMPS
CIGAR LIGHTER
STARTER SWITCH
SAFETY AND BACK-UP LIGHT SWITCH
STOP LAMP SWITCH
DOME LAMP JAMB SWITCHES
GLOVE BOX LAMP
HEATER CONTROL
HEATER RESISTOR
BLOWER MOTOR
DOME LAMP
FUEL TANK UNIT
BACK-UP LAMPS
L.H. TAIL & STOP LAMP
R.H. TAIL & STOP LAMP
LICENSE LAMP
FRONT BODY CONNECTOR
REAR BODY CONNECTOR
FRONT EXTENSION CONNECTOR
TURN SIGNAL SWITCH
L.H.
R.H.
TURN SIGNAL CONNECTOR
HORN BUTTON
HEATER LAMP
ASH TRAY LAMP
H.M.T. LAMP
HIGH BEAM IND. LAMP
L.H.
R.H.
TURN SIGNAL IND. LAMPS
INSTRUMENT LAMPS
ENGINE & DASH CONNECTOR
ALT. WARNING LAMP
TEMP. WARNING LAMP
OIL PRESSURE WARNING LAMP
FUEL GAGE
CLUSTER CONNECTOR
PARKING BRAKE LAMP
LIGHT SWITCH CONNECTOR
IGNITION SWITCH CONNECTOR
CLUSTER CONNECTOR
FRONT BODY CONNECTOR
NOTE:
ALL WIRES ARE IN GAGE UNLESS OTHERWISE SPECIFIED
ALL CONNECTIONS ON SAME GAGE WIRES OPEN END VIEW
NO HOT SCALE
1966 F-85
CHART-SCHEMATIC WIRING-V8
OLDSMOBILE DIVISION

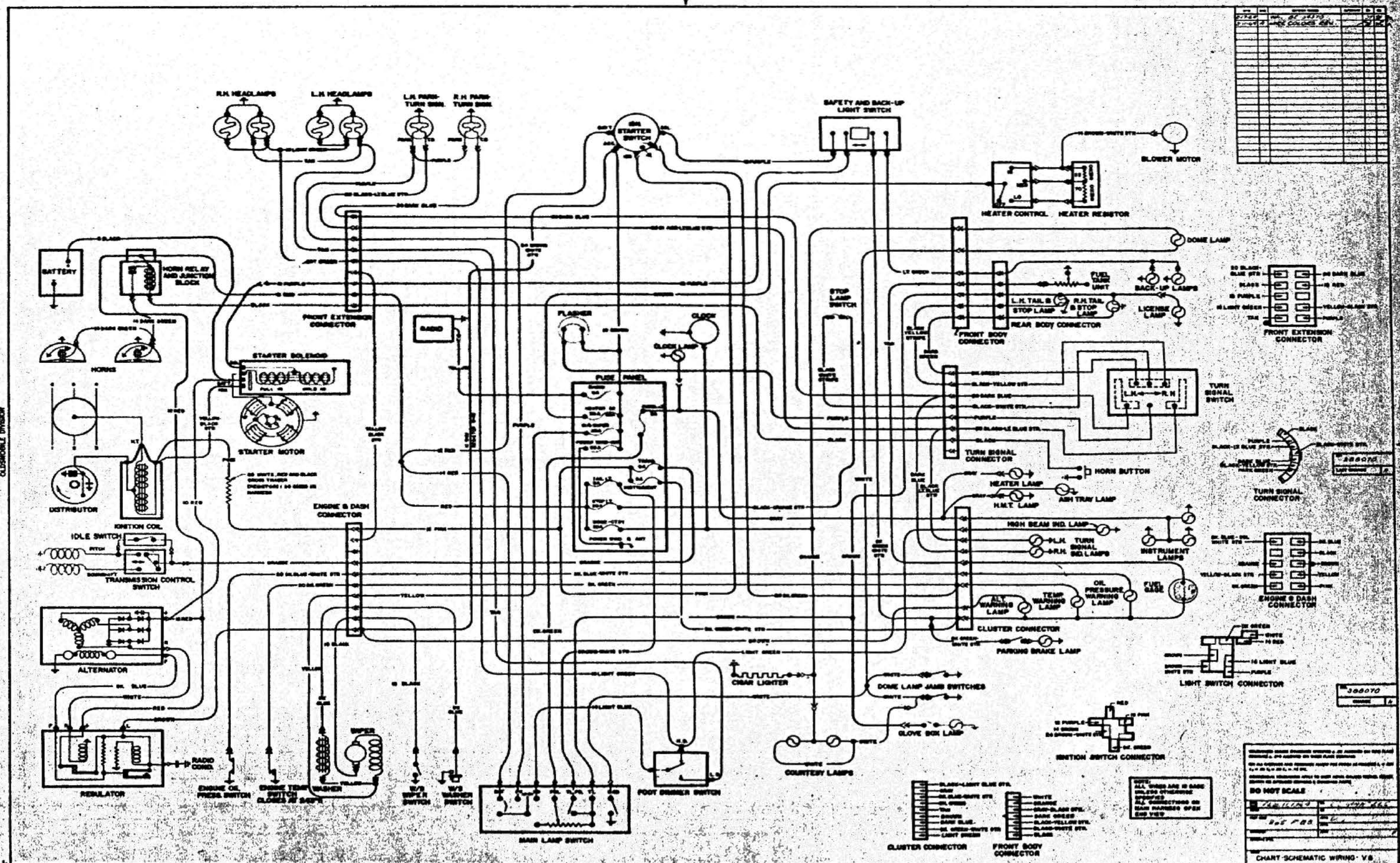
R.H. HEADLAMPS
L.H. HEADLAMPS
L.H. PARK-TURN SIGN.
R.H. PARK-TURN SIGN.
SAFETY AND BACK-UP LIGHT SWITCH
STARTER SWITCH
BLOWER MOTOR
HEATER CONTROL
HEATER RESISTOR
DOME LAMP
BATTERY
HORN RELAY AND JUNCTION BLOCK
FRONT EXTENSION CONNECTOR
RADIO
FLASHER
CLOCK
CLOCK LAMP
STOP LAMP SWITCH
FUEL GAGE UNIT
BACK-UP LAMPS
L.H. TAIL & STOP LAMP
R.H. TAIL & STOP LAMP
LICENSE LAMP
REAR BODY CONNECTOR
FRONT BODY CONNECTOR
FRONT EXTENSION CONNECTOR
HORNS
STARTER SOLENOID
STARTER MOTOR
FUSE PANEL
TURN SIGNAL SWITCH
L.H.
R.H.
TURN SIGNAL CONNECTOR
HORN BUTTON
HEATER LAMP
H.M.T. LAMP
ASH TRAY LAMP
TURN SIGNAL CONNECTOR
DISTRIBUTOR
IGNITION COIL
ENGINE & DASH CONNECTOR
IDLE SWITCH
TRANSMISSION CONTROL SWITCH
HIGH BEAM IND. LAMP
L.H. TURN SIGNAL IND. LAMPS
R.H.
INSTRUMENT LAMPS
ENGINE & DASH CONNECTOR
ALTERNATOR
ALT. WARNING LAMP
TEMP. WARNING LAMP
OIL PRESSURE WARNING LAMP
FUEL GAGE
CLUSTER CONNECTOR
PARKING BRAKE LAMP
LIGHT SWITCH CONNECTOR
CIGAR LIGHTER
DOME LAMP JAMB SWITCHES
GLOVE BOX LAMP
IGNITION SWITCH CONNECTOR
COURTESY LAMPS
RADIO CONN.
REGULATOR
ENGINE OIL PRESS. SWITCH
ENGINE TEMP. SWITCH CLOSED AT 240°F.
WASHER
WIPER
W/S WIPER SWITCH
W/S WASHER SWITCH
FOOT DIMMER SWITCH
MAIN LAMP SWITCH
CLUSTER CONNECTOR
FRONT BODY CONNECTOR
DO NOT SCALE
CHART-SCHEMATIC WIRING - V8
OLDSMOBILE DIVISION

OLDSMOBILE DIVISION GENERAL MOTORS CORPORATION LANSING 21, MICHIGAN

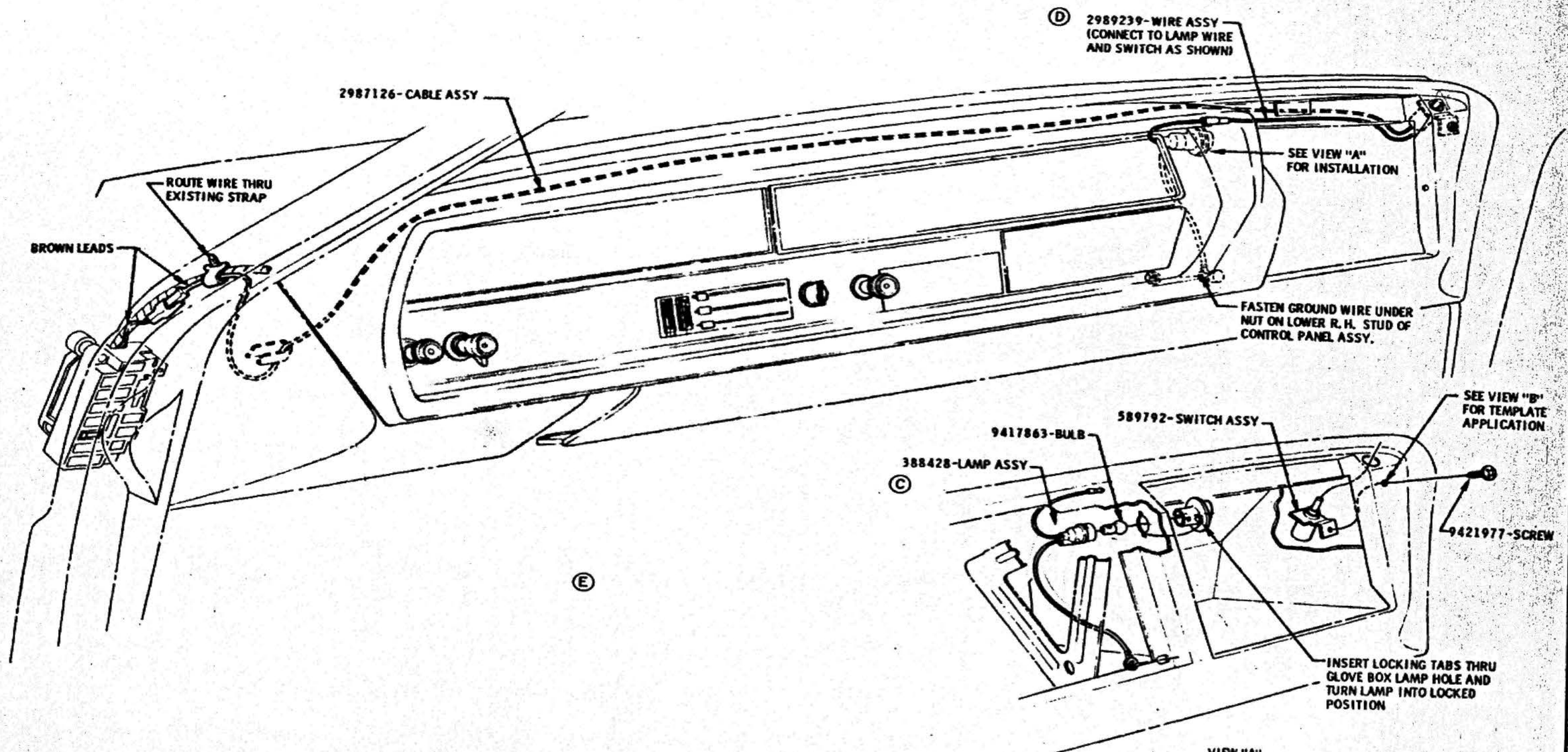

LAMP AND SWITCH INSTALLATION

DATE	SYM	REVISION	DR.	CK.	DATE	SYM	REVISION	DR.	CK.	DATE	SYM	REVISION	DR.	CK.
										6-2-64	E	VIEW REMOVED		VP
										5-7-64	D	WIRE ASSY NO. ADDED		VP
										4-16-64	C	GLOVE BOX LAMP REV.		VP
										3/16/64	B	WAS 35 T,U,EY-2.1		
										1-14-64	A	RECORDAWN & REVISED		VP

INSTALLATION — GLOVE BOX LAMP

DATE NOV. 18, 1963
DR. BY C.V. BEACHNAU
CHECKED H. VAN PELT
APPR. Fred Jantz
APPR.

FIRST USED 1965 — Oldsmobile GRAPHIC ILLUSTRATION — PAGE 12-9.1

SERIES F-85 — REF. 35Y60 — PART NO. 386595

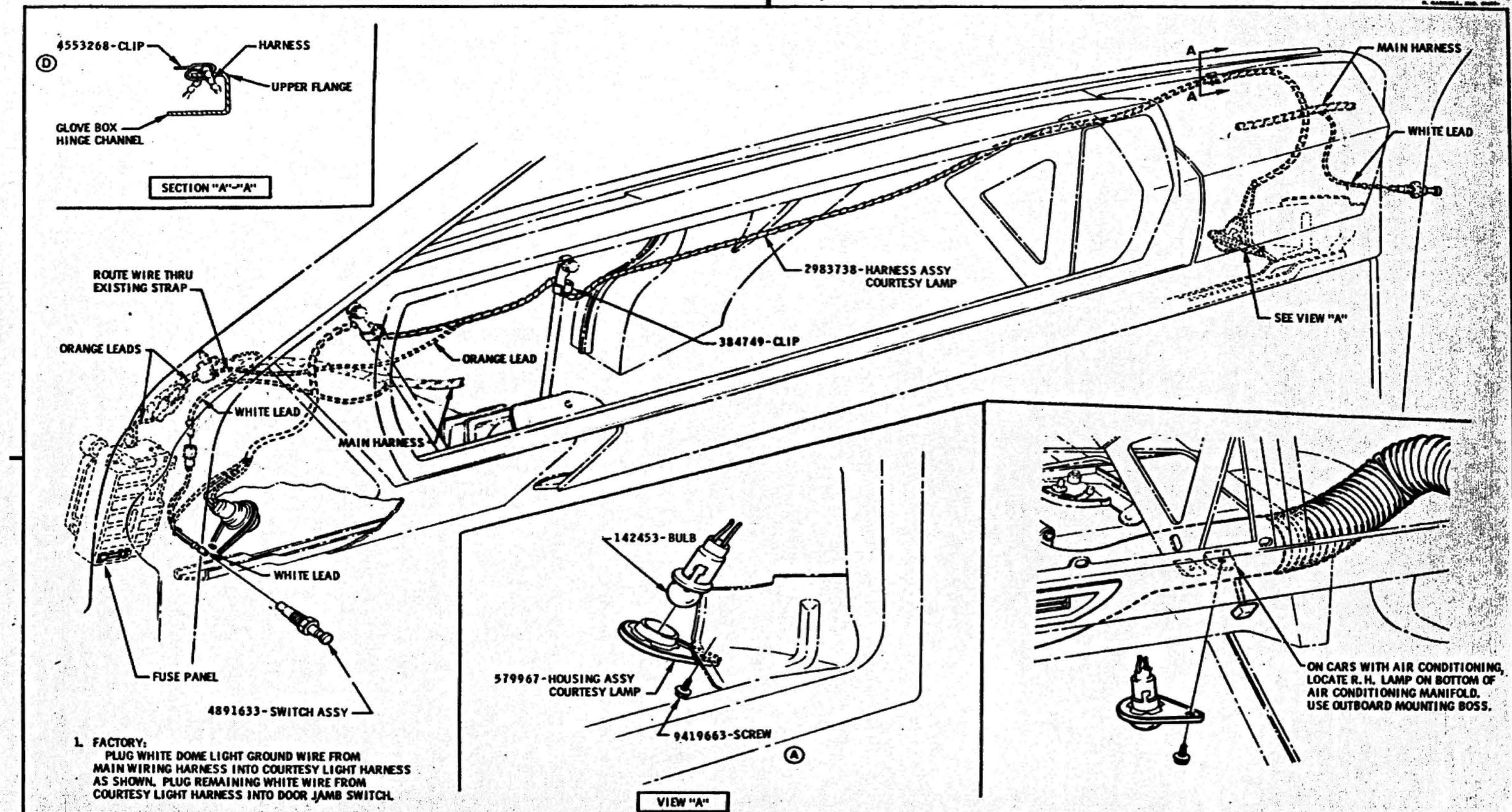

1. FACTORY:
PLUG WHITE DOME LIGHT GROUND WIRE FROM MAIN WIRING HARNESS INTO COURTESY LIGHT HARNESS AS SHOWN. PLUG REMAINING WHITE WIRE FROM COURTESY LIGHT HARNESS INTO DOOR JAMB SWITCH.

DATE	SYM	REVISION	DR.	CK.	DATE	SYM	REVISION	DR.	CK.	DATE	SYM	REVISION	DR.	CK.
										12-28-64	D	WAS 415780-CLIP		VP
										4-16-64	C	REVISED AND REDRAWN.		VP
										3/16/64	B	WAS 35T.U.BY-3.1		
										1-4-64	A	WAS 9420083-SCREW		

INSTALLATION: COURTESY LAMPS

DATE NOV. 18, 1963
DR. BY C.U. BEACHNAU
CHECKED H. VAN PELT
APPR.
APPR.

FIRST USED 1965
SERIES F-85
Oldsmobile Service ILLUSTRATION
REF. BP-31731 12L
PAGE 12-10.1
PART NO. 386594

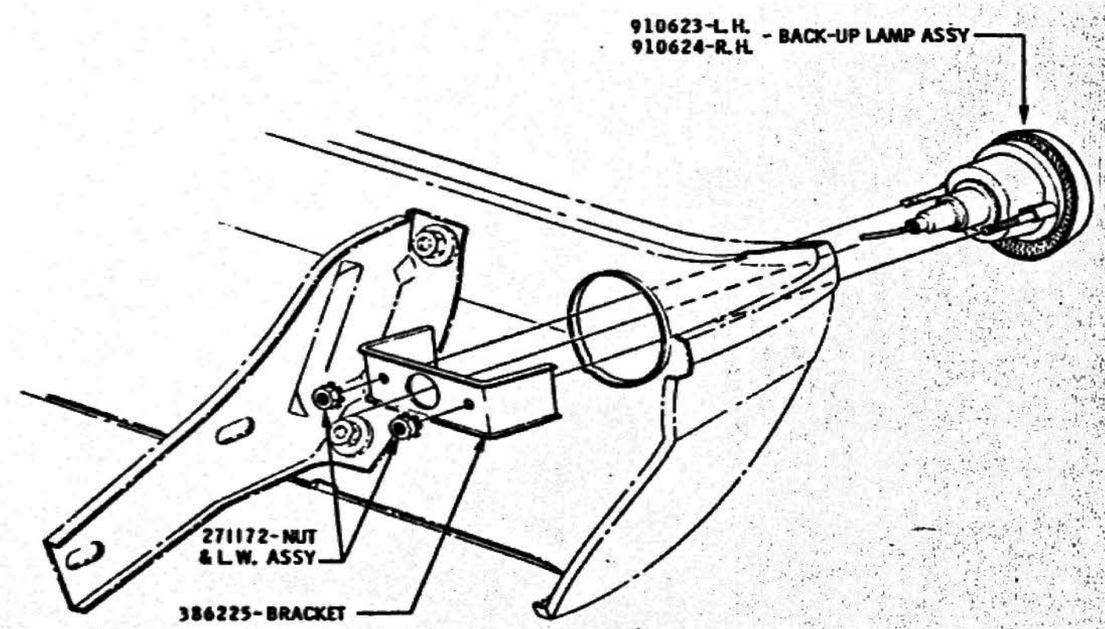

VIEW "B"

REAR VIEW OF BUMPER SHOWING TYPICAL LAMP FASTENING (ALL MODELS EXCEPT STATION WAGONS)

Ⓔ

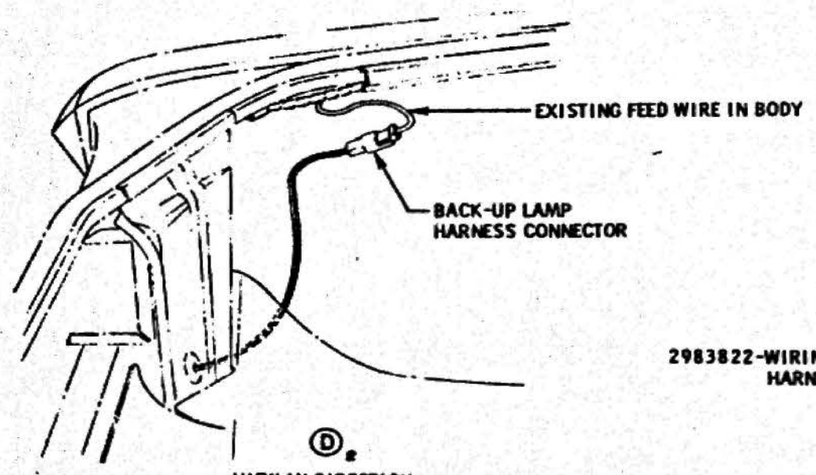

Ⓓ

VIEW IN DIRECTION OF ARROW

CONNECTION OF WIRING HARNESS

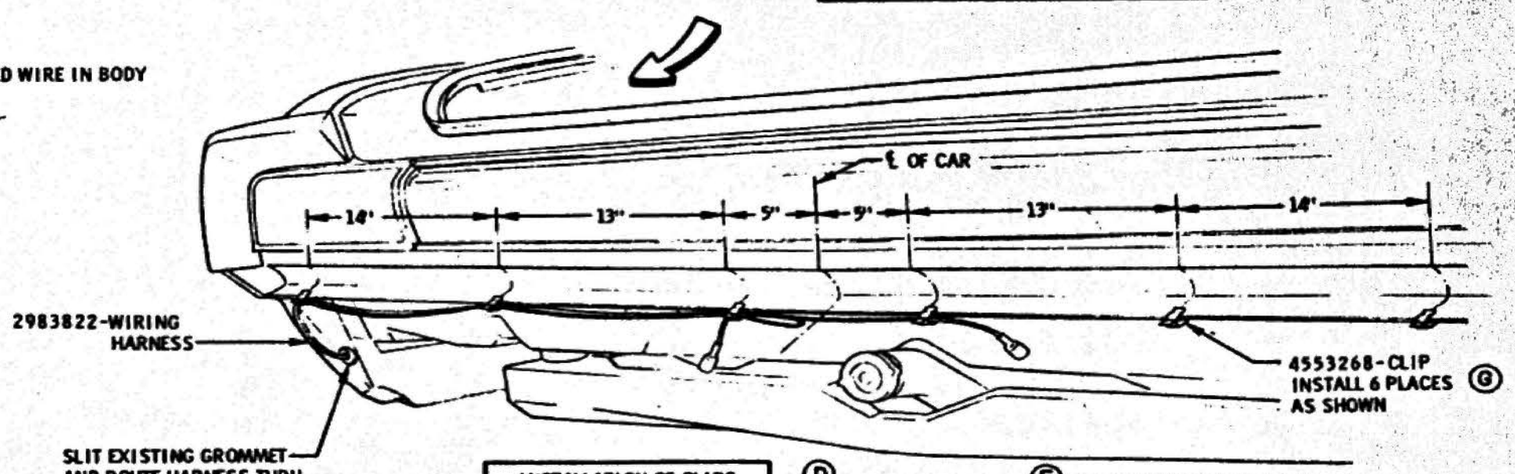

INSTALLATION OF CLIPS AND WIRING HARNESS ALL CARS EXCEPT STA. WAG.

Ⓓ

Ⓕ ROUTE LAMP LEADS THRU 2 OUTBOARD CLIPS ON BOTH SIDES OF CAR

DATE	SYM	REVISION	DR.	CK.	DATE	SYM	REVISION	DR.	CK.	DATE	SYM	REVISION	DR.	CK.
										6-9-64	E	VIEW "A" MOVED TO 12-12.2		VP
										6-9-64	D	VIEW & PT. NOS ADDED		VP
										3-28-64	C	WAS 898828-LAMP		VP
					12-28-64	G	WAS 415780-CLIP	BP	VP	3-28-64	B	WAS 423553 SCR ASSY		VP
					7-17-64	F	NOTE ADDED		VP	3/16/64	A	WAS 35 T.U.E.Y-5.1		

INSTALLATION

DATE JAN. 9, 1964
DR. BY JOSEPH V. GALL
CHECKED H. VAN PELT
APPR. —
APPR.

BACK-UP LAMPS

FIRST USED 1965

Oldsmobile GRAPHIC ILLUSTRATION

SERIES F85

REF. 35T86

PAGE 12-12.1

PART NO. 387347

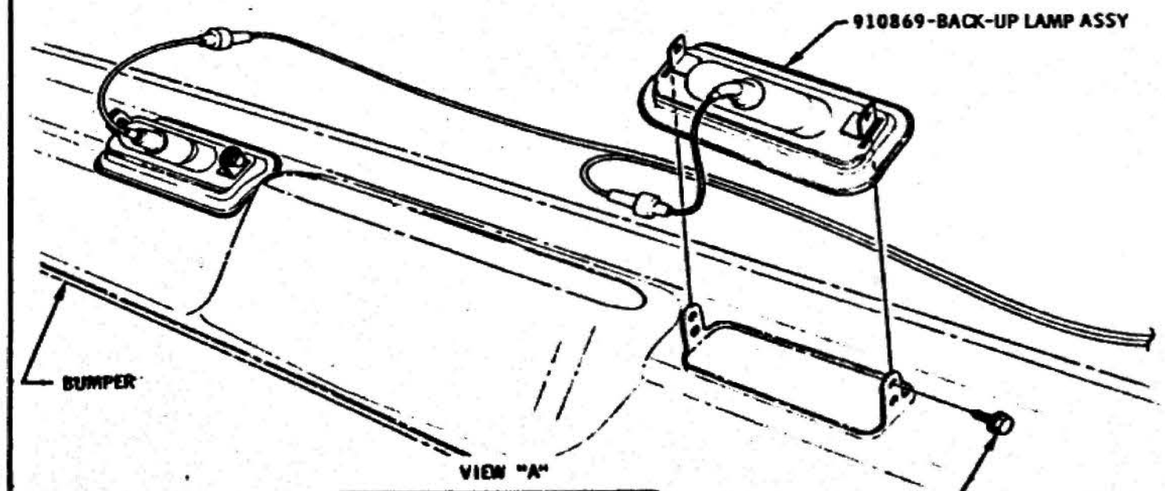

REAR VIEW OF BUMPER SHOWING TYPICAL LAMP FASTENING (STATION WAGON ONLY)

Ⓒ

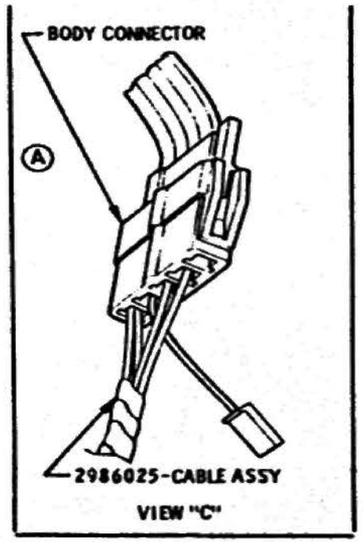

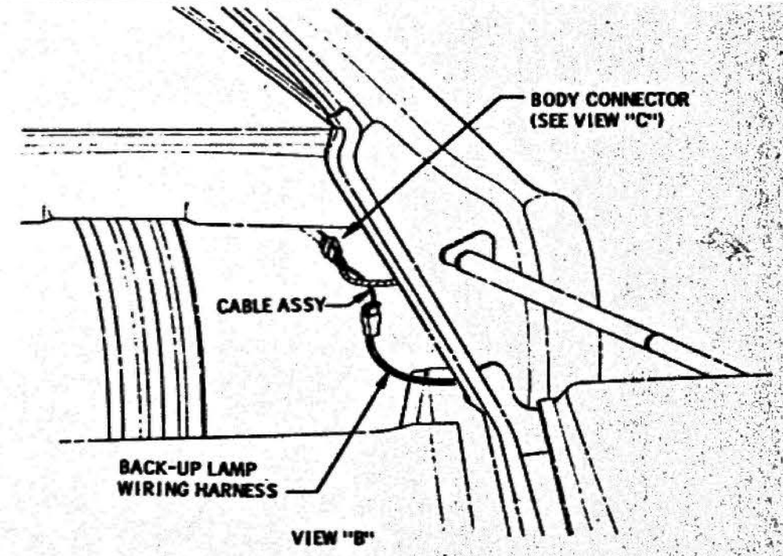

R.H. VIEW OF REAR, INSIDE PANEL OF STATION WAGON

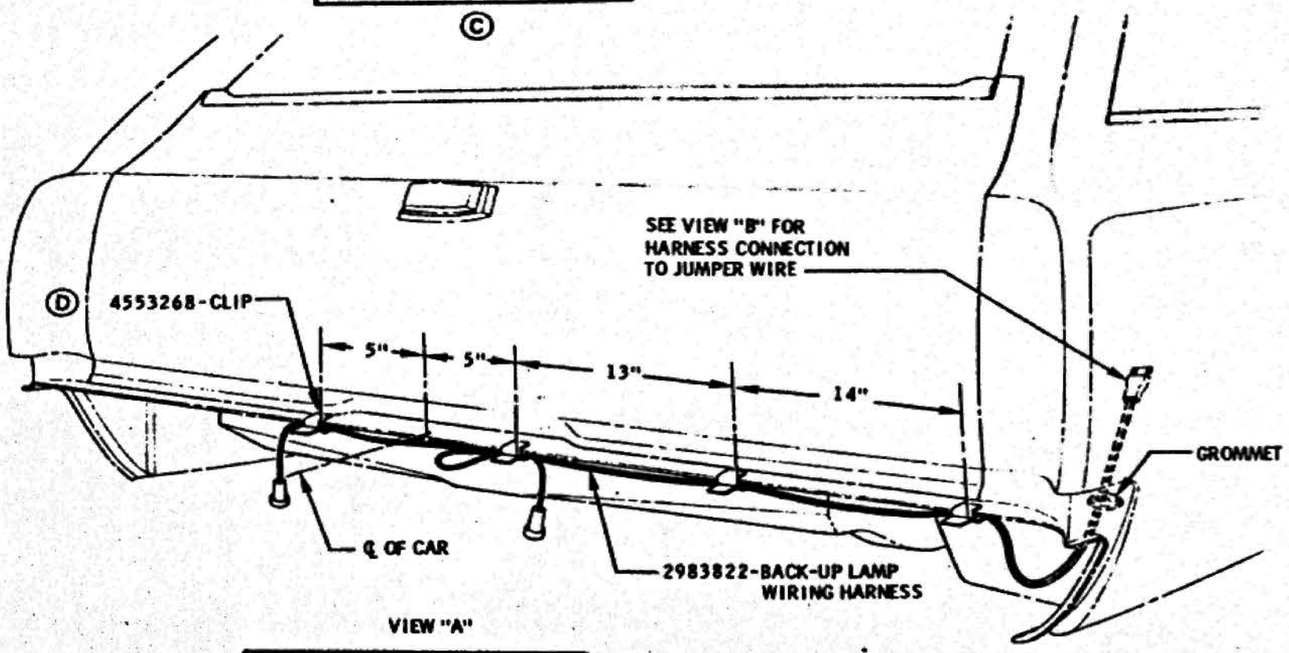

INSTALLATION OF STATION WAGON BACK-UP LAMP HARNESS

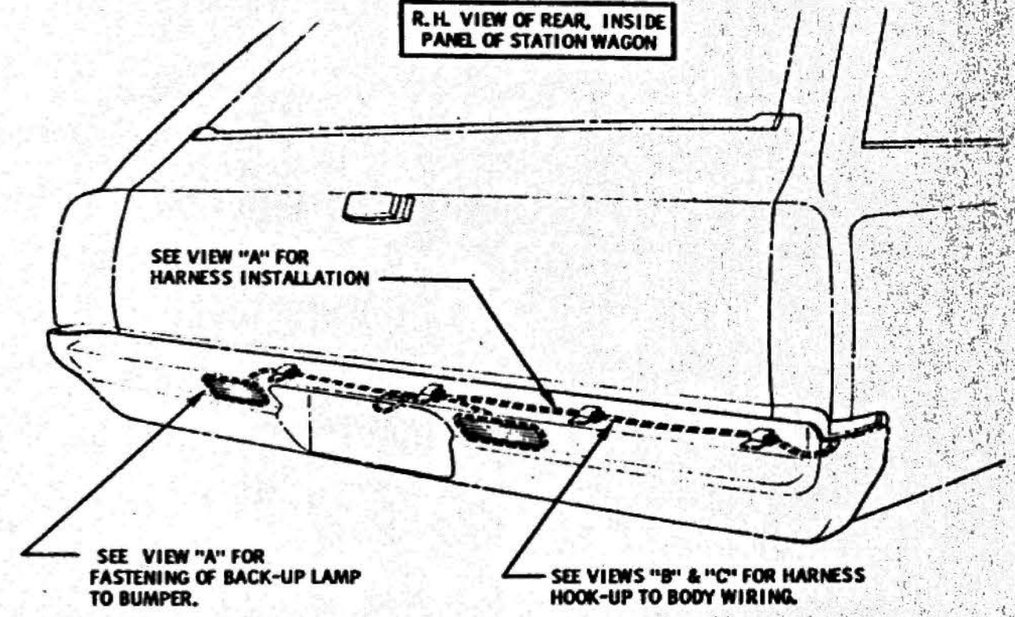

REAR VIEW OF STATION WAGON LAMPS & WIRING

DATE	SYM	REVISION	DR.	CK.	DATE	SYM	REVISION	DR.	CK.	DATE	SYM	REVISION	DR.	CK.
										12-28-64	D	WAS 45780-CLIP	BP	VP
										6-9-64	C	VIEW "A" ADDED	CA	VP
										3-16-64	B	WAS 35 T.U. 6 V-5.2		
										1-23-64	A	WAS JUMPER WIRE	BP	VP

INSTALLATION	BACK-UP LAMPS		
DATE JAN. 9, 1964	FIRST USED 1965	Oldsmobile GRAPHIC ILLUSTRATION	PAGE 12-12.2
DR. BY JOSEPH V. GALL			
CHECKED H. VAN PELT	DESIGNED F85	REF. 35T86	PART NO. 387347
APPR.			
APPR.			

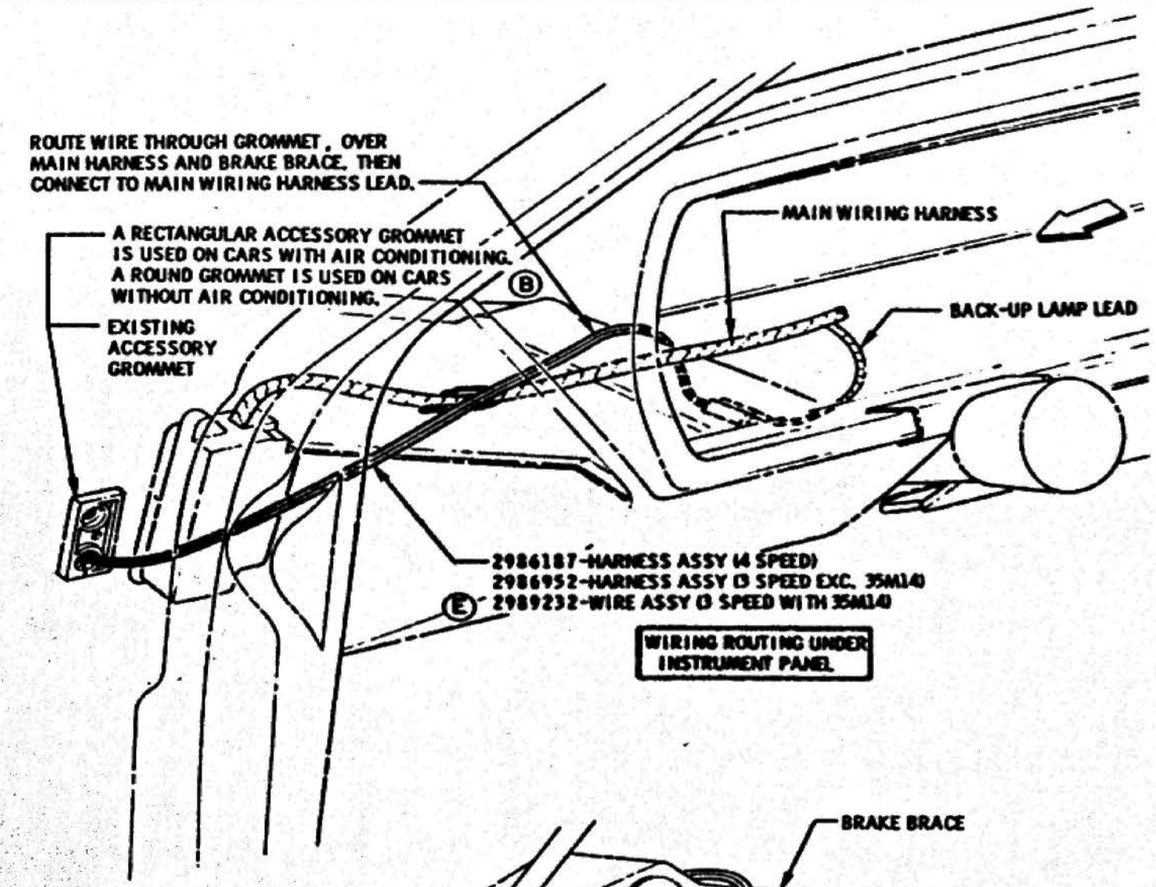

WIRING ROUTING UNDER INSTRUMENT PANEL

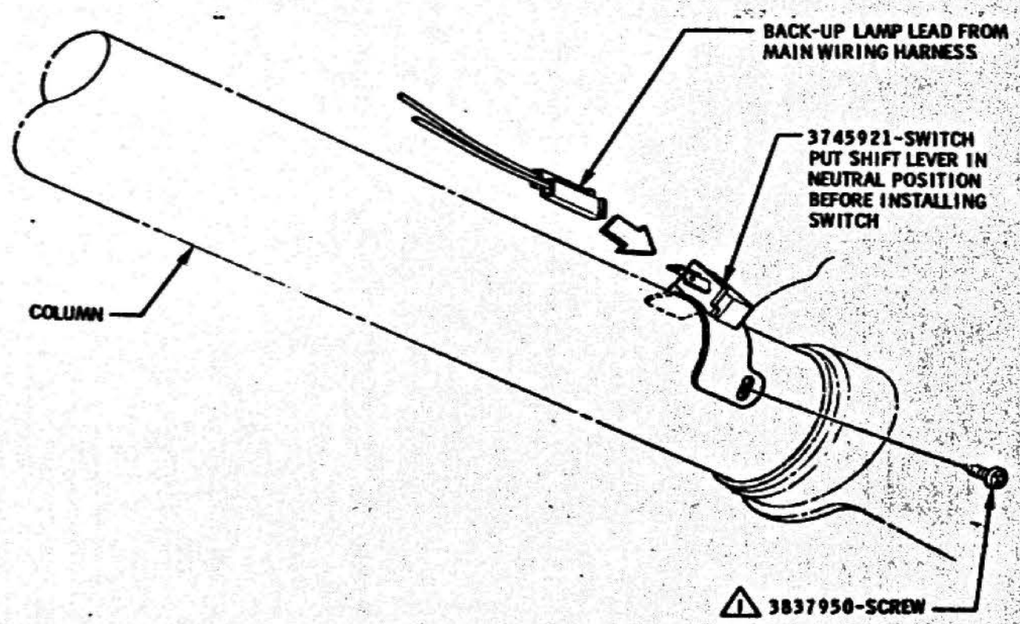

INSTALLATION OF BACK-UP LAMP SWITCH FOR COLUMN SHIFT (SYNCROMESH)

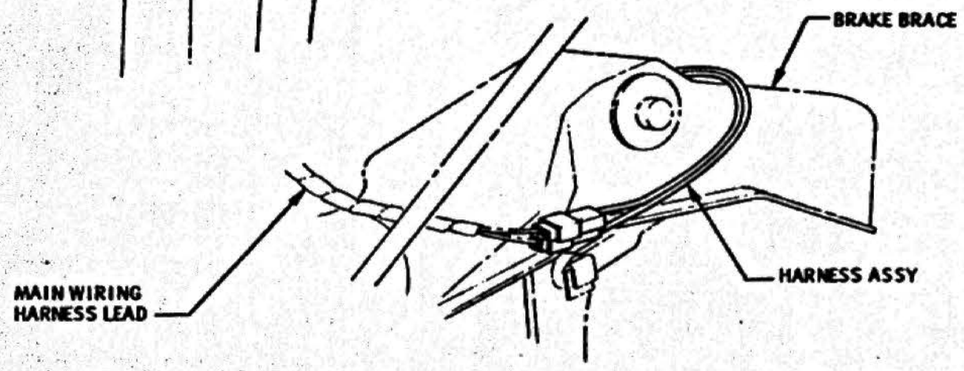

VIEW IN DIRECTION OF ARROW

INSTALLATION OF BACK-UP LAMP WIRING FOR CARS WITH THREE AND FOUR SPEED FLOOR SHIFT SYNCROMESH TRANSMISSION.

D 36-60 LBS. IN.

DATE	SYM	REVISION	DR.	CK.	DATE	SYM	REVISION	DR.	CK.	DATE	SYM	REVISION	DR.	CK.
										2-11-65	E	PART ADDED	DS	VP
										11-24-64	D	TORQUE SPEC ADDED	AG	VP
										3-16-64	C	WAS 35 T, U, & Y-5.8	DW	VP
										2-21-64	B	NOTE ADDED	CB	VP
										1-23-64	A	2986952-CABLE ADDED	DD	VP

INSTALLATION

DATE JAN. 9, 1964
DR. BY JOSEPH V. GALL
CHECKED H. VAN PELT
APPR. Fred Jacobs

BACK-UP LAMPS

FIRST USED 1965
Oldsmobile Graphic Illustration
PAGE 12-12.3
DESIGNED F85
REF. 35T86
PART NO. 387347

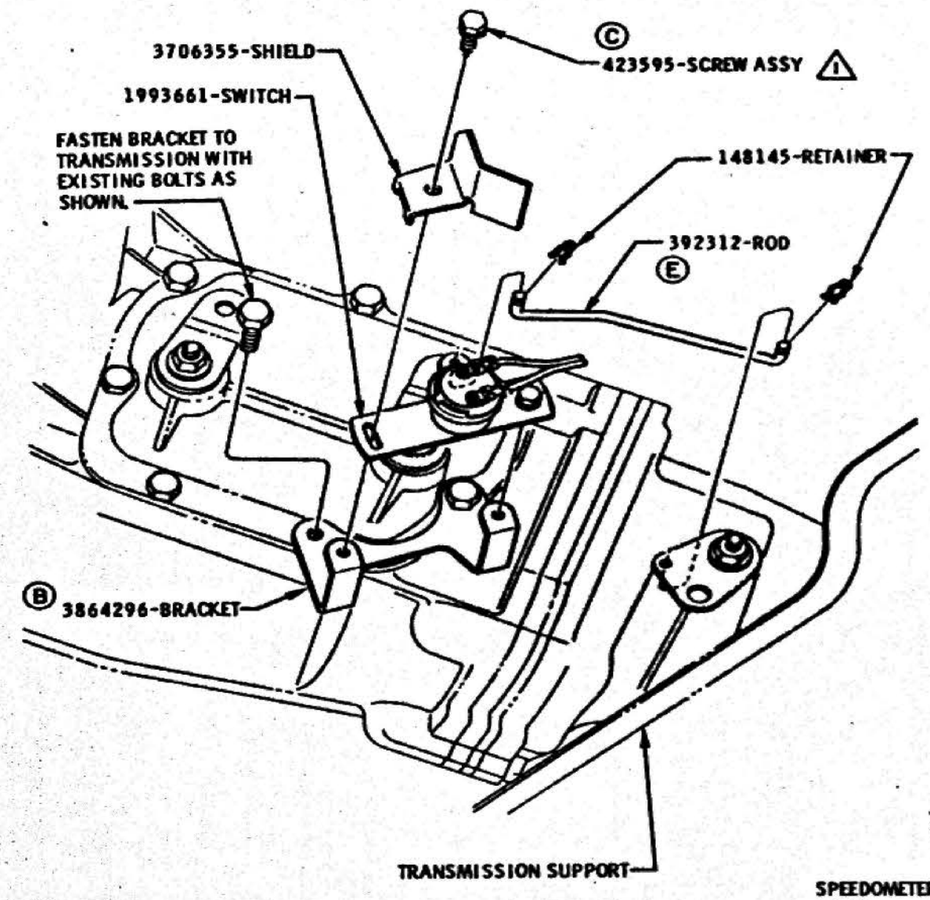

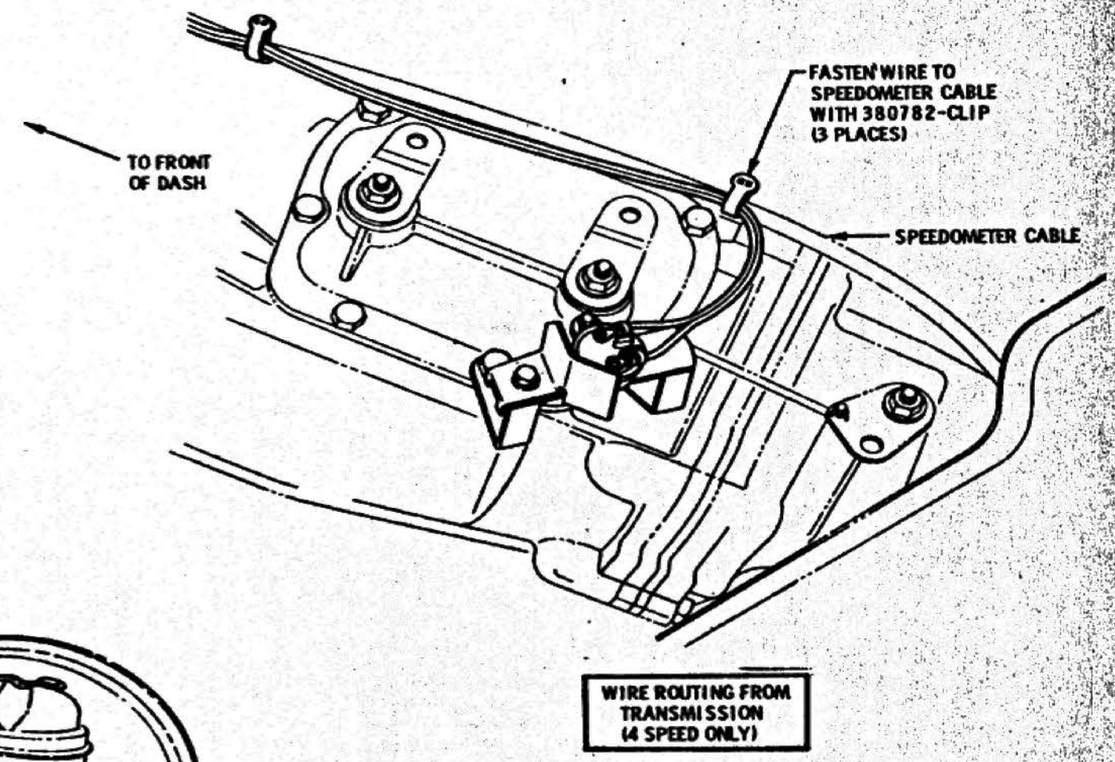

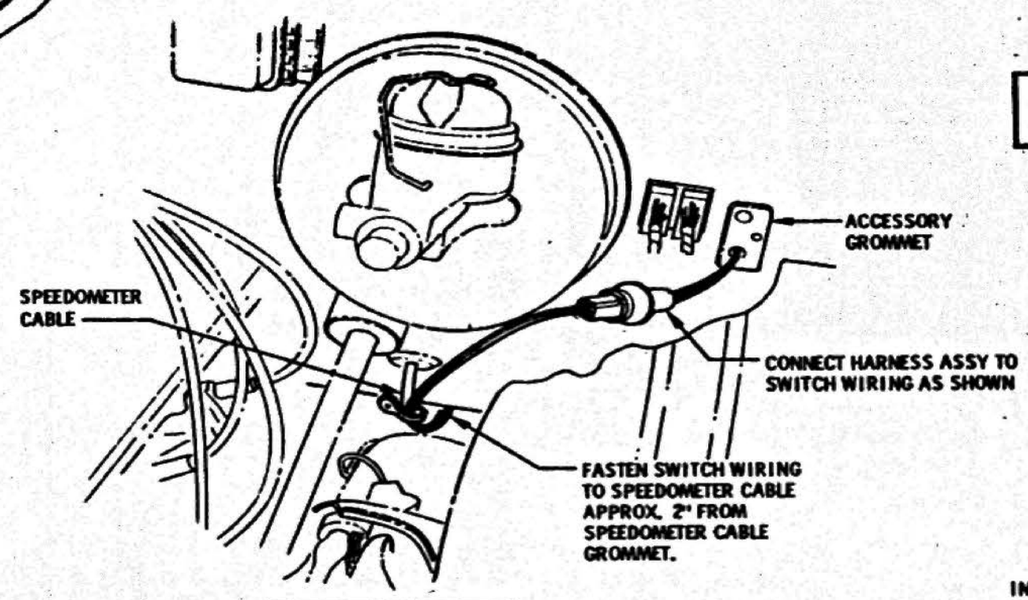

Ⓓ

△1 12-18 LBS. IN.

INSTALLATION OF BACK-UP LAMP SWITCH FOR FOUR SPEED S.M. AND WIRING FOR CARS WITH THREE AND FOUR SPEED FLOOR SHIFT S.M. TRANSMISSION.

DATE	SYM	REVISION	DR.	CK.	DATE	SYM	REVISION	DR.	CK.	DATE	SYM	REVISION	DR.	CK.
										5-11-65	E	WAS 3846427 ROD	JS	VP
										11-20-64	D	TORQUE SPEC. ADDED		
										6-26-64	C	FASTENING REVISED	M	VP
										6-26-64	B	WAS 3833287	M	VP
										3/16/64	A	WAS 35T46Y-5.6		

INSTALLATION — BACK-UP LAMPS

DATE JAN. 9, 1964
DR. BY JOSE PHV GALL
CHECKED H. VAN PELT
APPR. Fred Jones
APPR.

FIRST USED 1965
Oldsmobile Graphic Illustration
SERIES F85
REF. 35T06
PAGE 12-12.4
PART NO. 387347

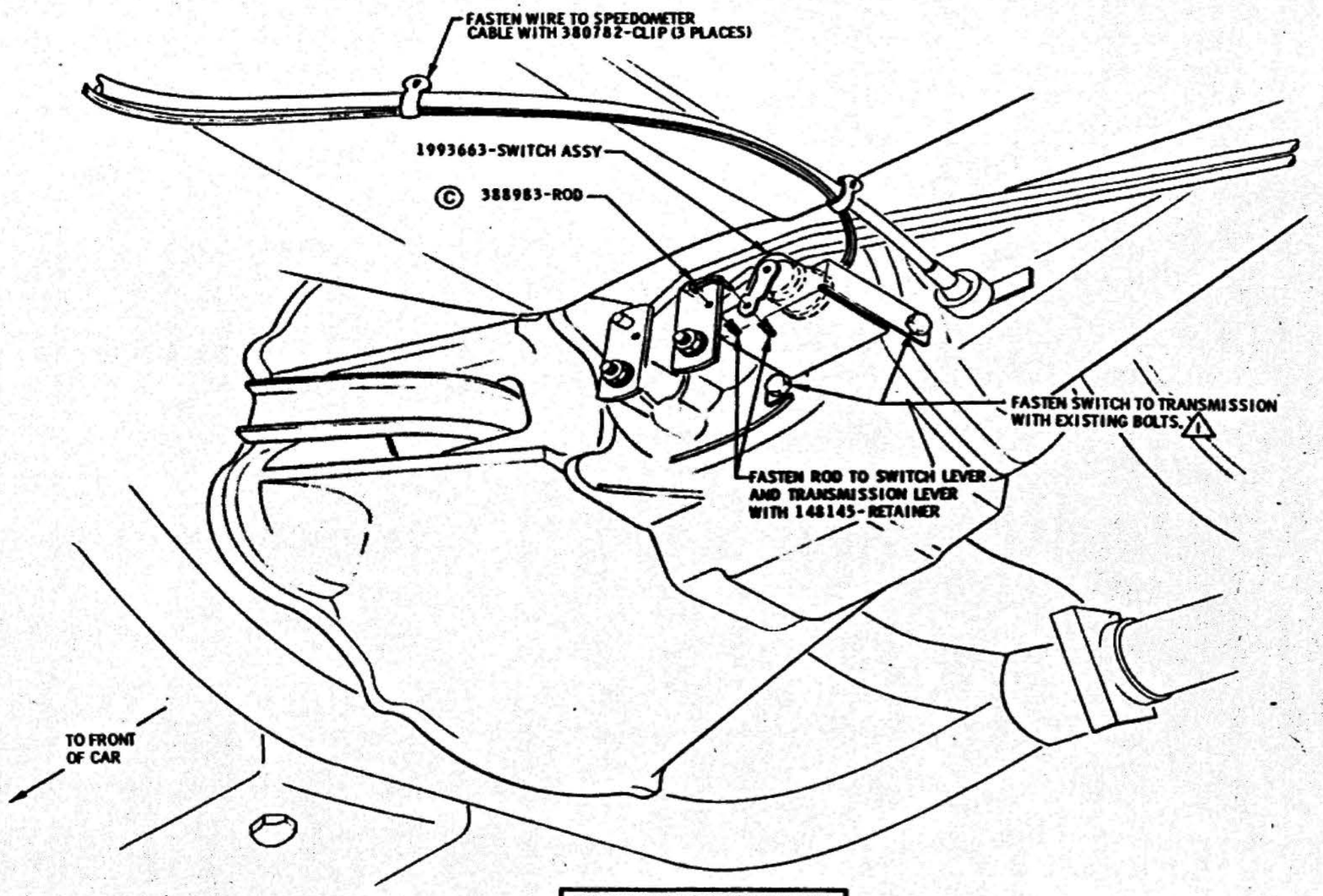

INSTALLATION OF BACK-UP LAMP SWITCH FOR THREE SPEED FLOOR SHIFT TRANSMISSION

Ⓓ △1 15-20 LBS. FT.

DATE	SYM	REVISION	DR.	CK.	DATE	SYM	REVISION	DR.	CK.	DATE	SYM	REVISION	DR.	CK.
										11-24-64	D	TORQUE SPEC ADDED	JC	PTB
										5-25-64	C	WAS 384782 ROD	DAN	PTB
										3/16/64	B	WAS 35 T.U.&Y-5.5	DAN	PTB
										1-23-64	A	3 PLACES ADDED	JC	VP

INSTALLATION **BACK-UP LAMPS**

DATE JAN. 9, 1964
DR. BY JOSEPH K. GALL
CHECKED H. VAN PELT
APPR. [signature]
APPR.

FIRST USED 1965 — Oldsmobile Service ILLUSTRATION

SERIES F85 — REF. 35T86 — PAGE 12-12.5 — PART NO. 387347

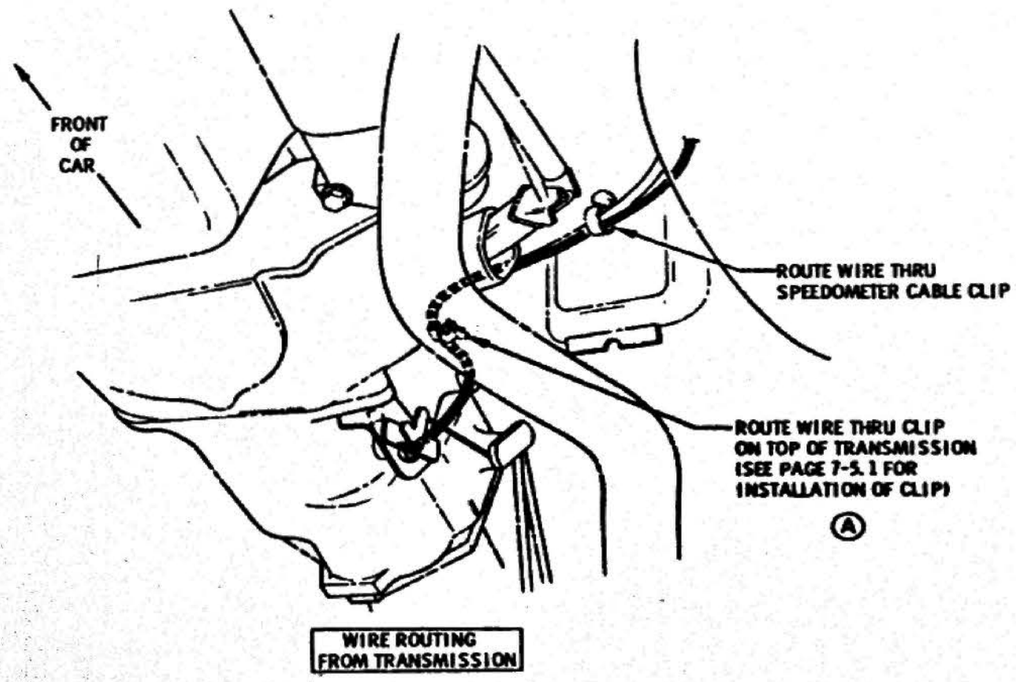

WIRE ROUTING FROM TRANSMISSION

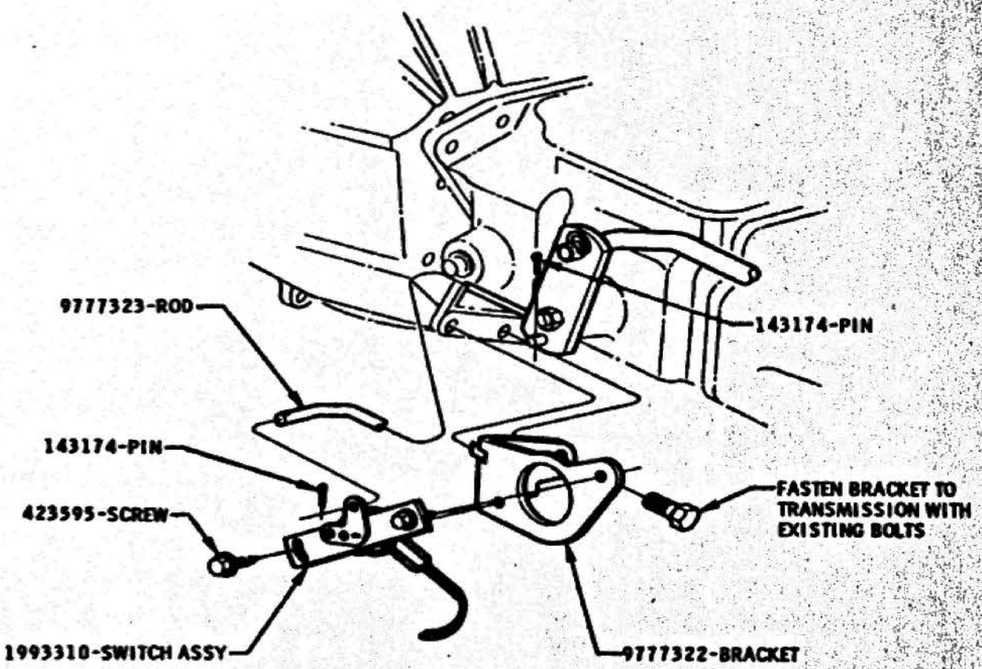

SWITCH FASTENING

(3SM14 ONLY)

INSTALLATION OF BACK-UP LAMP SWITCH FOR THREE SPEED FLOOR SHIFT TRANSMISSION

DATE	SYM	REVISION	DR.	CK.	DATE	SYM	REVISION	DR.	CK.	DATE	SYM	REVISION	DR.	CK.
										2-17-65	A	WAS PAGE 7-3.2	JS	VP

INSTALLATION BACK-UP LAMPS

DATE FEB. 11, 1965
DR. BY JOE V. GALL
CHECKED H. VAN PELT
APPR.
APPR.

FIRST USED 1965 — Oldsmobile GRAPHIC ILLUSTRATION

SERIES F-85 — REF. 36750

PAGE 12-12.6

PART NO. 387347

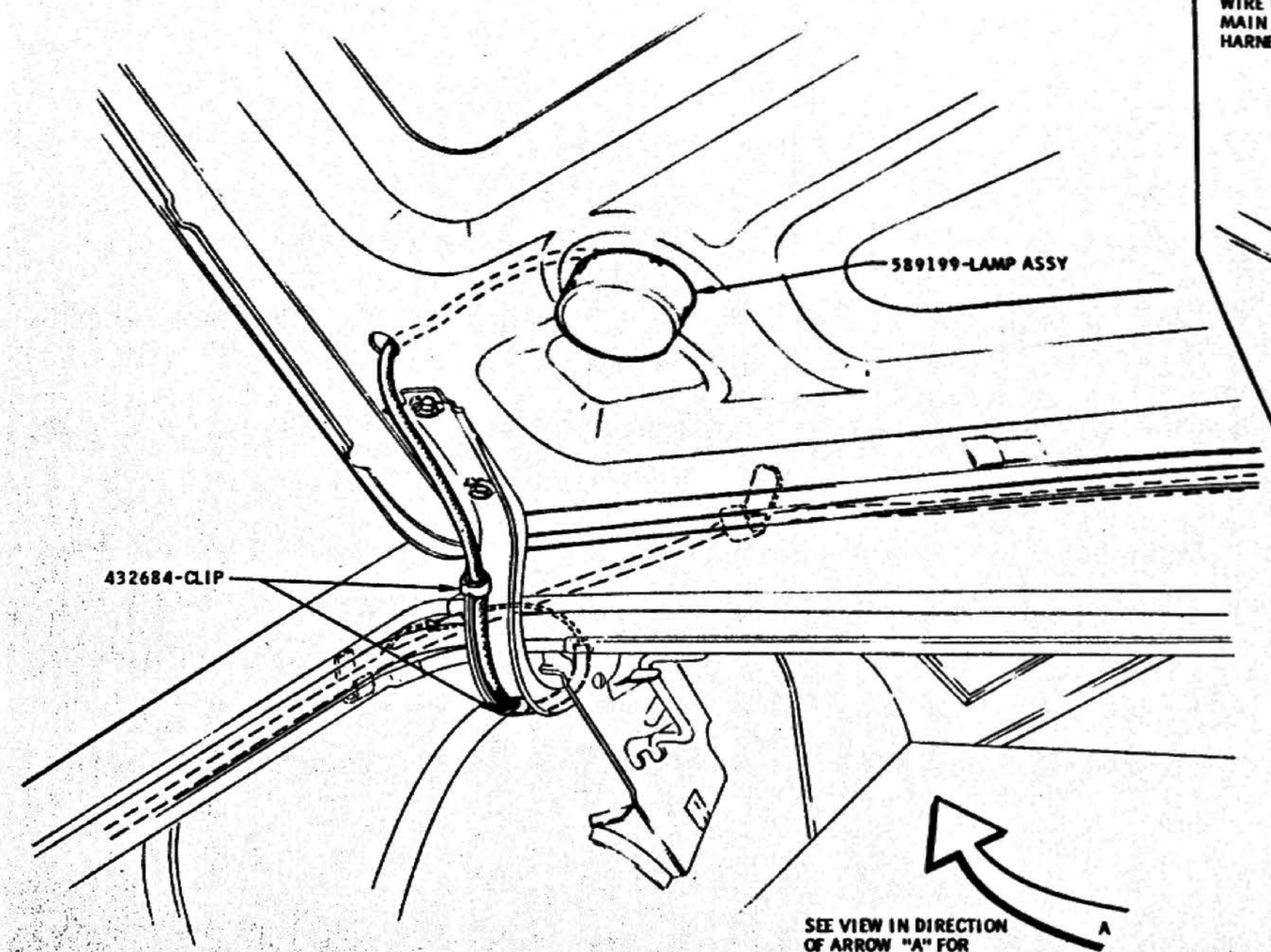

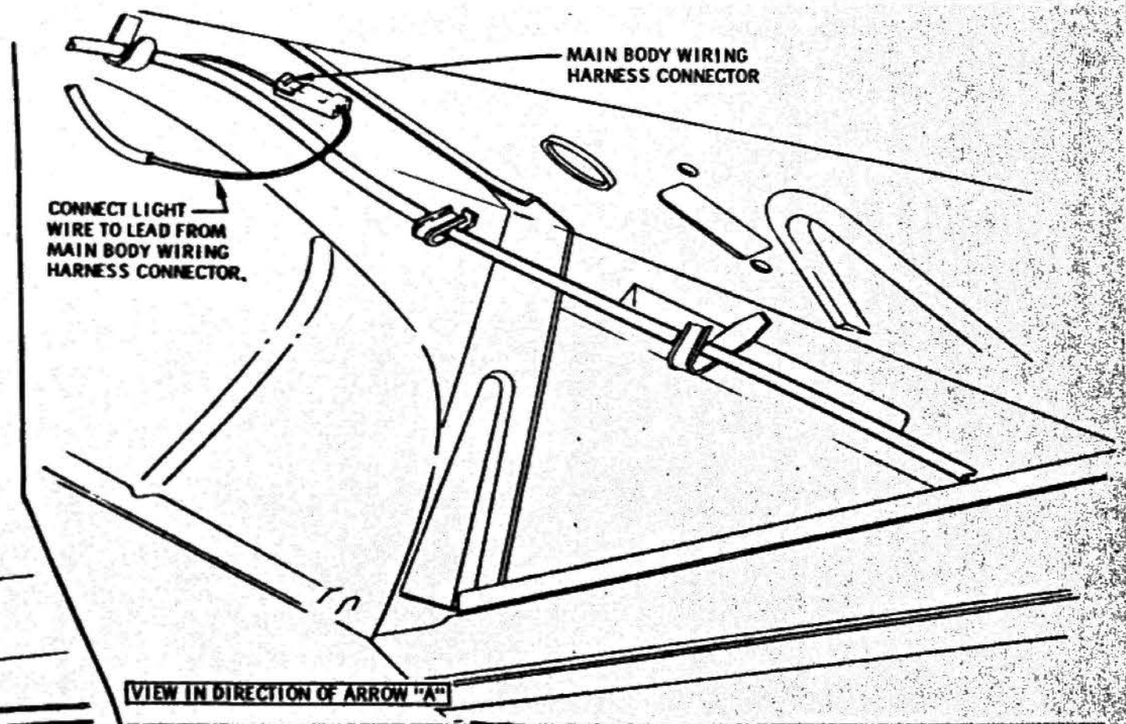

VIEW IN DIRECTION OF ARROW "A"

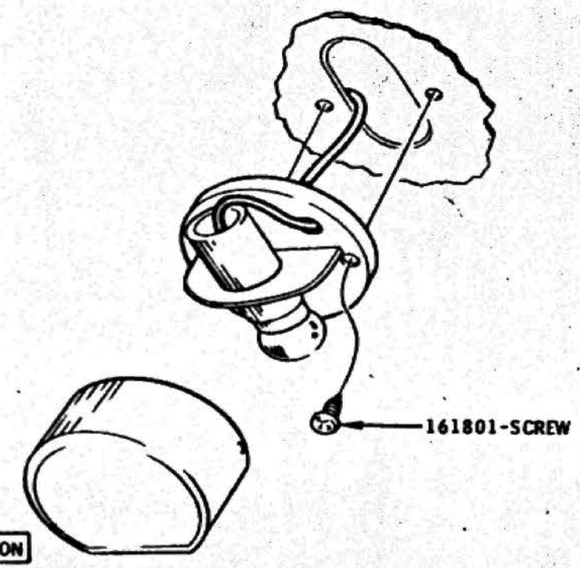

THIS LAMP USES A SELF CONTAINED SWITCH WHICH AUTOMATICALLY MAKES CONTACT WHEN THE TRUNK LID IS OPEN. WHEN THE TRUNK LID IS CLOSED, THE LIGHT IS AUTOMATICALLY TURNED OFF.

EXCEPT STATION WAGON

DATE	SYM	REVISION	DR	CK	DATE	SYM	REVISION	DR	CK	DATE	SYM	REVISION	DR.	CK.
										3/10/64	A	WAS 35 T.U.EY-6.1		

INSTALLATION **TRUNK LAMP**

DATE DEC. 24, 1963
DR. BY B. PARKER
CHECKED H. VAN PELT
APPR. Fred Jones

FIRST USED 1965

Oldsmobile GRAPHIC ILLUSTRATION

SERIES F 85

REF. 35Y60

PAGE 12-13.1

PART NO. 387294

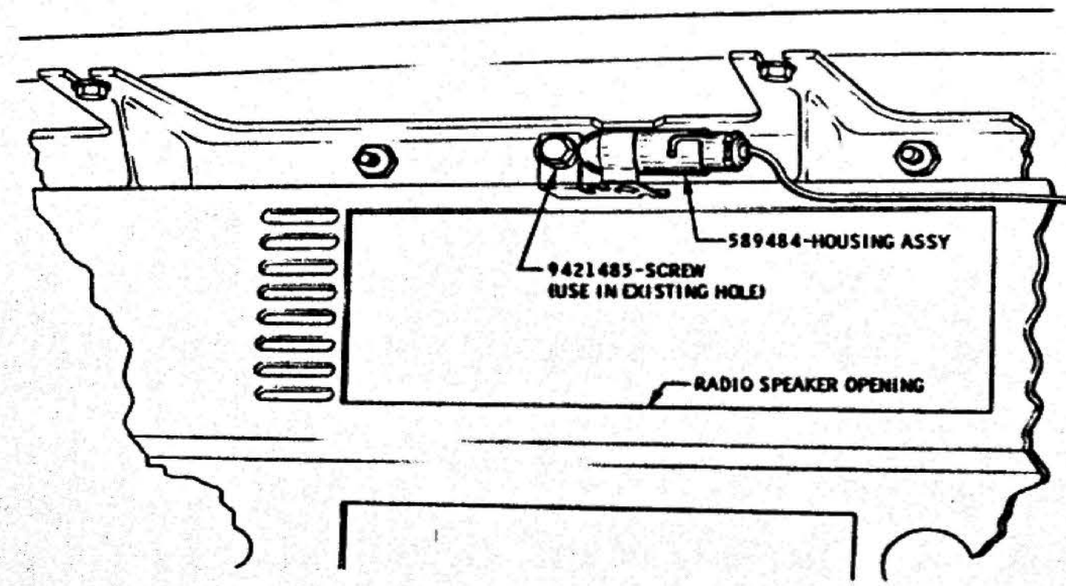

ASH TRAY LAMP INSTALLATION

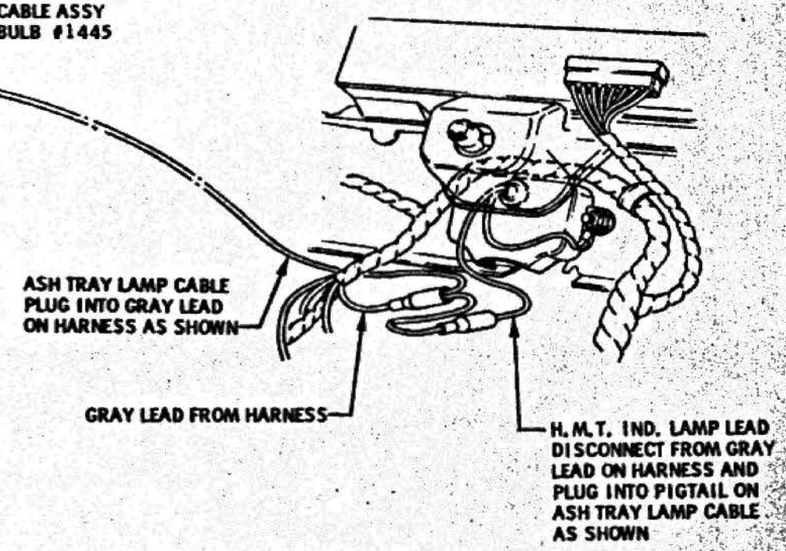

CABLE INSTALLATION ON CARS EQUIPPED WITH H.M.T.

									3/16/64	A	NAS 35 T.U.&V-7.1		

INSTALLATION	ASH TRAY LAMP		
DATE JAN. 20, 1964	FIRST USED 1965	Oldsmobile GRAPHIC ILLUSTRATION	PAGE 12-14.1
DR. BY C. E. MAY			
CHECKED H. VAN PELT	SERIES F-85	REF. 12L	PART NO. 387569
APPR.			

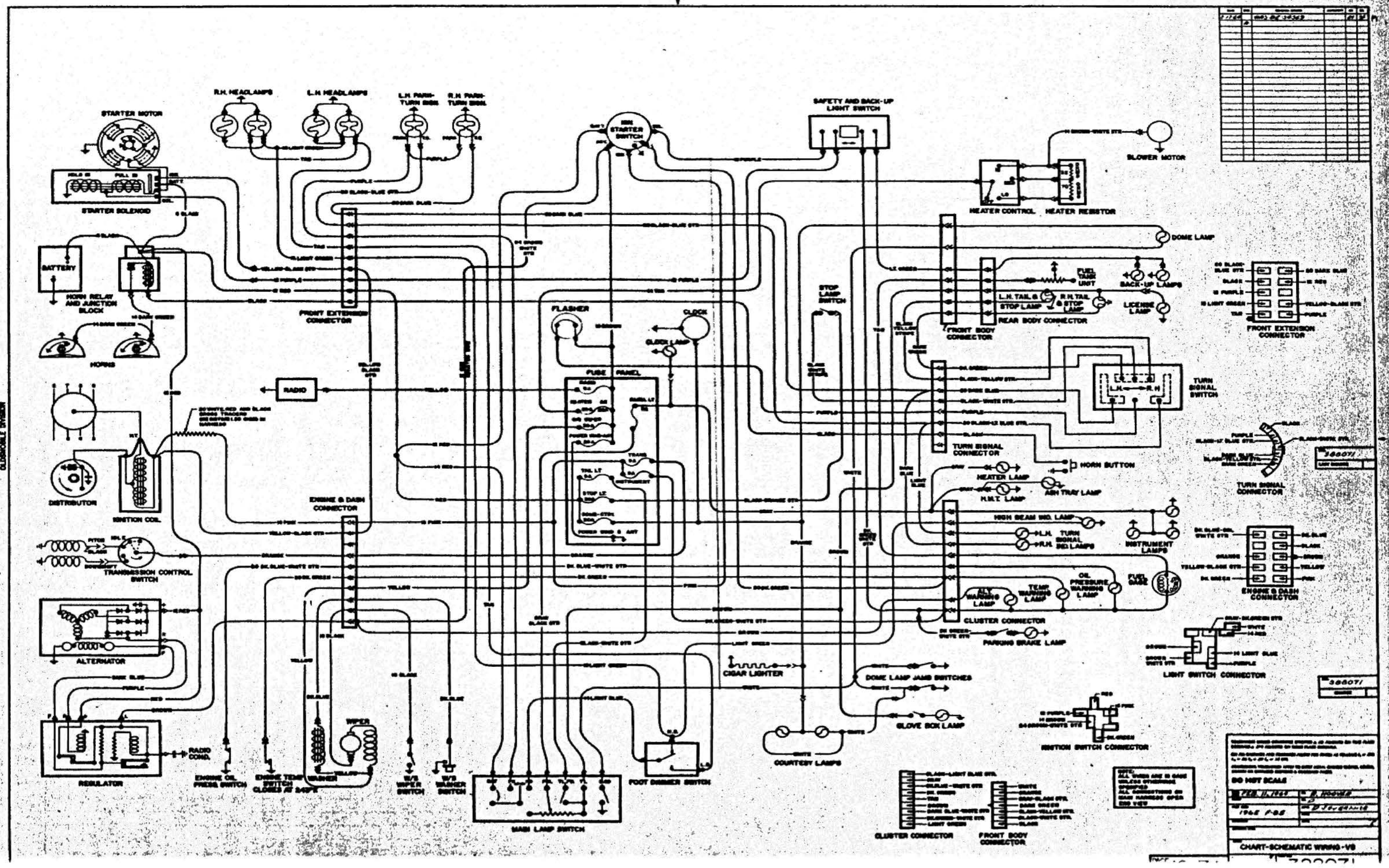
STARTER MOTOR
STARTER SOLENOID
R.H. HEADLAMPS
L.H. HEADLAMPS
L.H. PARK-TURN SIGN.
R.H. PARK-TURN SIGN.
IGN. STARTER SWITCH
SAFETY AND BACK-UP LIGHT SWITCH
BLOWER MOTOR
HEATER CONTROL
HEATER RESISTOR
DOME LAMP
BATTERY
HORN RELAY AND JUNCTION BLOCK
HORNS
FRONT EXTENSION CONNECTOR
FLASHER
CLOCK
CLOCK LAMP
STOP LAMP SWITCH
FUEL TANK UNIT
BACK-UP LAMPS
L.H. TAIL & STOP LAMP
R.H. TAIL & STOP LAMP
LICENSE LAMP
REAR BODY CONNECTOR
FRONT BODY CONNECTOR
FUSE PANEL
RADIO
TURN SIGNAL SWITCH
TURN SIGNAL CONNECTOR
HORN BUTTON
HEATER LAMP
ASH TRAY LAMP
H.M.T. LAMP
DISTRIBUTOR
IGNITION COIL
ENGINE & DASH CONNECTOR
HIGH BEAM IND. LAMP
TURN SIGNAL IND. LAMPS
INSTRUMENT LAMPS
TRANSMISSION CONTROL SWITCH
OIL PRESSURE WARNING LAMP
FUEL GAGE
ALT. WARNING LAMP
TEMP. WARNING LAMP
CLUSTER CONNECTOR
PARKING BRAKE LAMP
ALTERNATOR
CIGAR LIGHTER
DOME LAMP JAMB SWITCHES
GLOVE BOX LAMP
COURTESY LAMPS
LIGHT SWITCH CONNECTOR
IGNITION SWITCH CONNECTOR
RADIO COND.
REGULATOR
ENGINE OIL PRESS. SWITCH
ENGINE TEMP. SWITCH CLOSES AT 240°F
WIPER
WASHER
W/S WIPER SWITCH
W/S WASHER SWITCH
MAIN LAMP SWITCH
FOOT DIMMER SWITCH
CLUSTER CONNECTOR
FRONT BODY CONNECTOR
DO NOT SCALE
CHART-SCHEMATIC WIRING-V8
OLDSMOBILE DIVISION

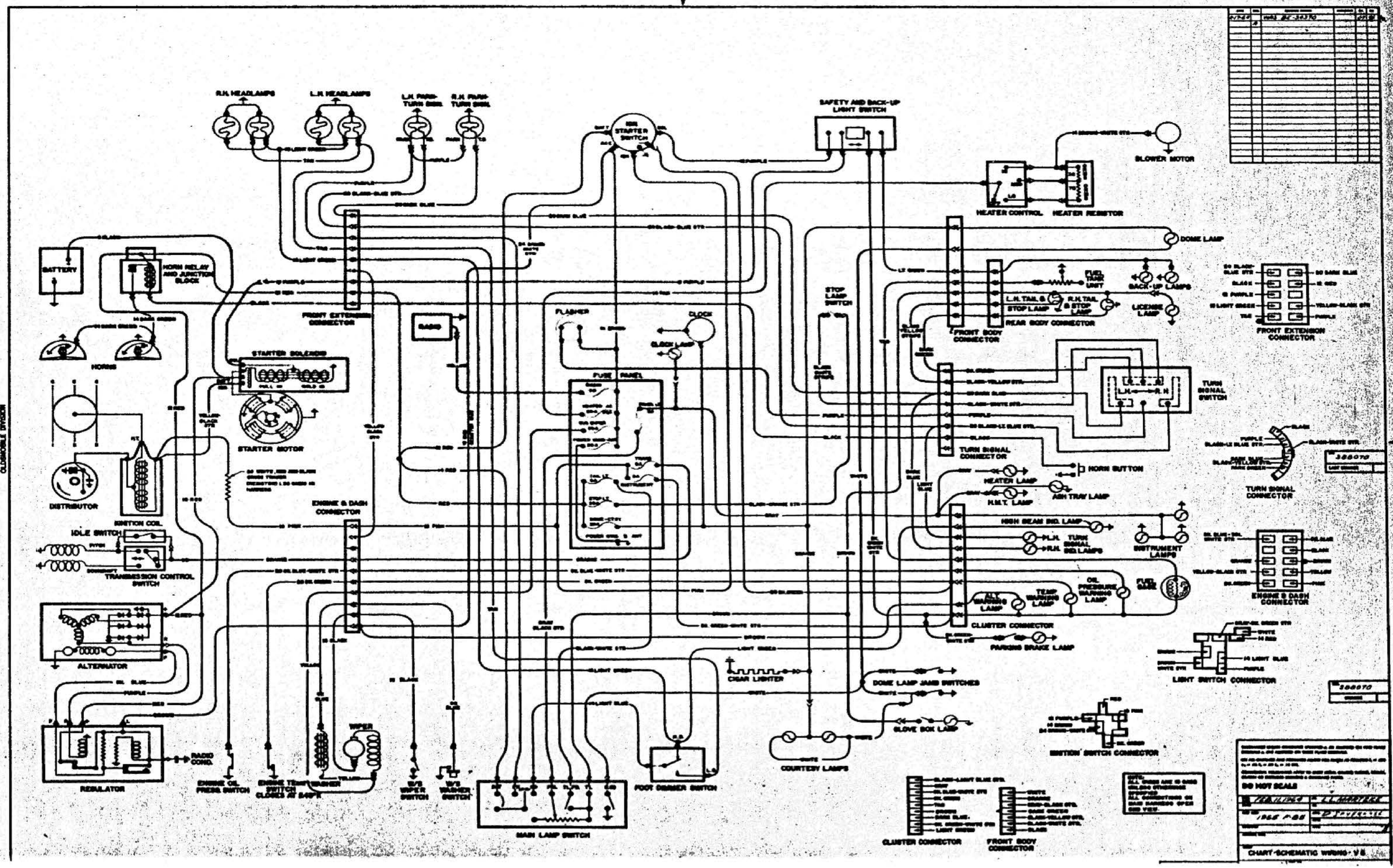
R.H. HEADLAMPS
L.H. HEADLAMPS
L.H. PARK-TURN SIGNL
R.H. PARK-TURN SIGNL
STARTER SWITCH
SAFETY AND BACK-UP LIGHT SWITCH
BLOWER MOTOR
HEATER CONTROL
HEATER RESISTOR
DOME LAMP
BATTERY
HORN RELAY AND JUNCTION BLOCK
FRONT EXTENSION CONNECTOR
RADIO
FLASHER
CLOCK
CLOCK LAMP
STOP LAMP SWITCH
FUEL TANK UNIT
BACK-UP LAMPS
L.H. TAIL & STOP LAMP
R.H. TAIL & STOP LAMP
LICENSE LAMP
FRONT BODY CONNECTOR
REAR BODY CONNECTOR
FRONT EXTENSION CONNECTOR
HORNS
STARTER SOLENOID
STARTER MOTOR
FUSE PANEL
TURN SIGNAL SWITCH
TURN SIGNAL CONNECTOR
HORN BUTTON
HEATER LAMP
ASH TRAY LAMP
H.M.T. LAMP
DISTRIBUTOR
IGNITION COIL
IDLE SWITCH
TRANSMISSION CONTROL SWITCH
ENGINE & DASH CONNECTOR
HIGH BEAM IND. LAMP
L.H. TURN SIGNAL IND. LAMPS
R.H.
INSTRUMENT LAMPS
OIL PRESSURE WARNING LAMP
TEMP WARNING LAMP
A.L.T. WARNING LAMP
FUEL GAGE
CLUSTER CONNECTOR
PARKING BRAKE LAMP
ALTERNATOR
CIGAR LIGHTER
DOME LAMP JAMB SWITCHES
GLOVE BOX LAMP
LIGHT SWITCH CONNECTOR
IGNITION SWITCH CONNECTOR
COURTESY LAMPS
RADIO COND.
REGULATOR
ENGINE OIL PRESS. SWITCH
ENGINE TEMP. SWITCH CLOSES AT 240°F
WASHER
WIPER
W/S WIPER SWITCH
W/S WASHER SWITCH
FOOT DIMMER SWITCH
MAIN LAMP SWITCH
CLUSTER CONNECTOR
FRONT BODY CONNECTOR
DO NOT SCALE
CHART-SCHEMATIC WIRING - V8

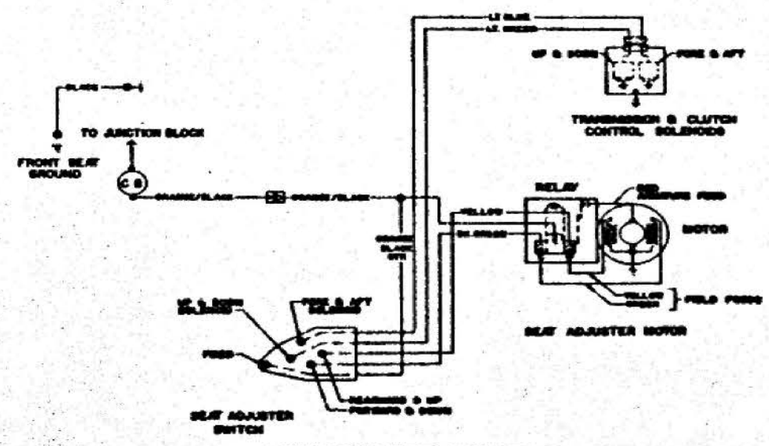

4 WAY POWER SEAT ADJUSTER

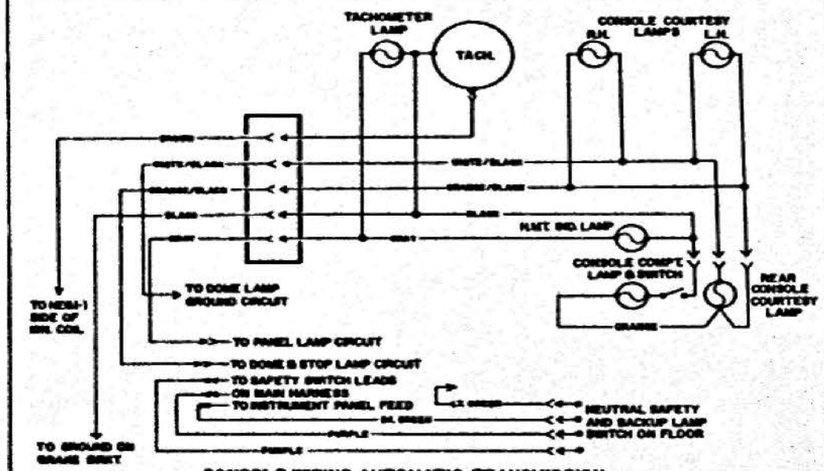

CONSOLE WIRING AUTOMATIC TRANSMISSION

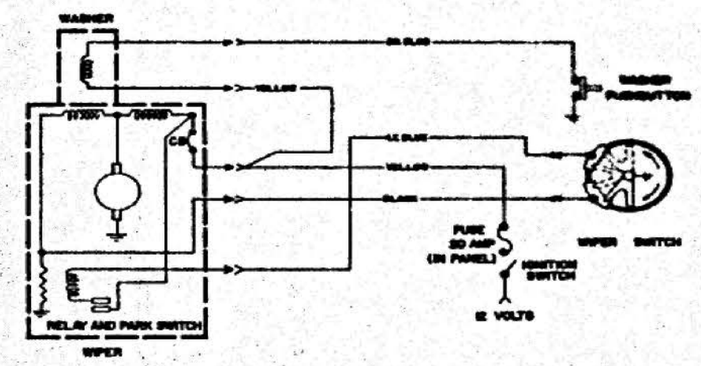

TWO SPEED WIPER

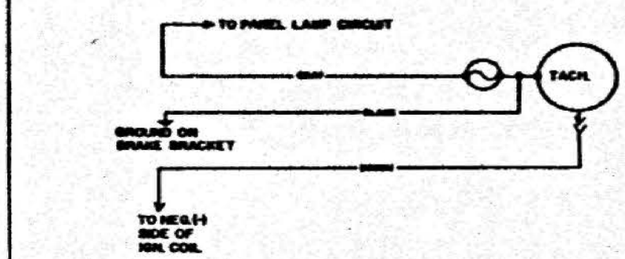

CONSOLE WIRING THREE OR FOUR SPEED TRANSMISSION

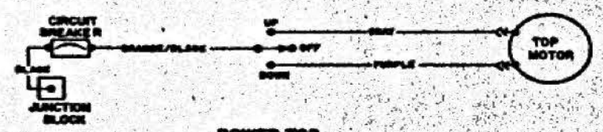

POWER TOP

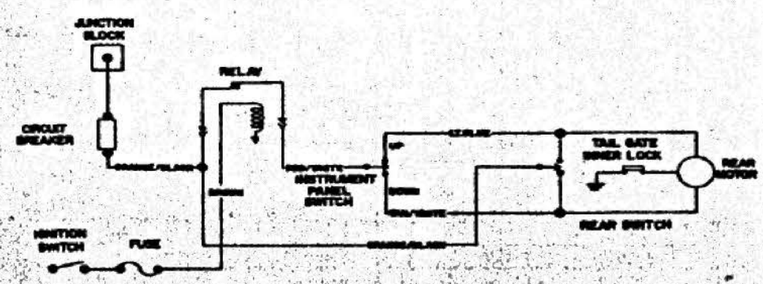

POWER TAIL GATE WINDOW

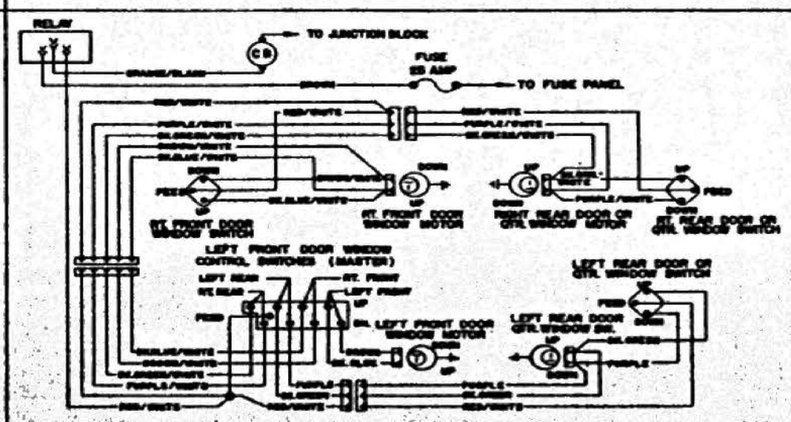

FRONT DOOR & QUARTER POWER WINDOW

DO NOT SCALE

CHART-SCHEMATIC WIRING DIAGRAM (OPTIONAL EQUIPMENT)

388076

OLDSMOBILE DIVISION

BUMPERS

DRAWING NO.	DRAWING NAME	PAGE NO.
386400	FRONT BUMPER	14 - 2.1
386401	REAR BUMPER (EXC. STATION WAGON)	14 - 3.1
386402	REAR BUMPER (STATION WAGON)	14 - 4.1
386764	LICENSE PLATE FASTENING	14 - 5.1
386729	FUEL FILLER DOOR	14 - 6.1

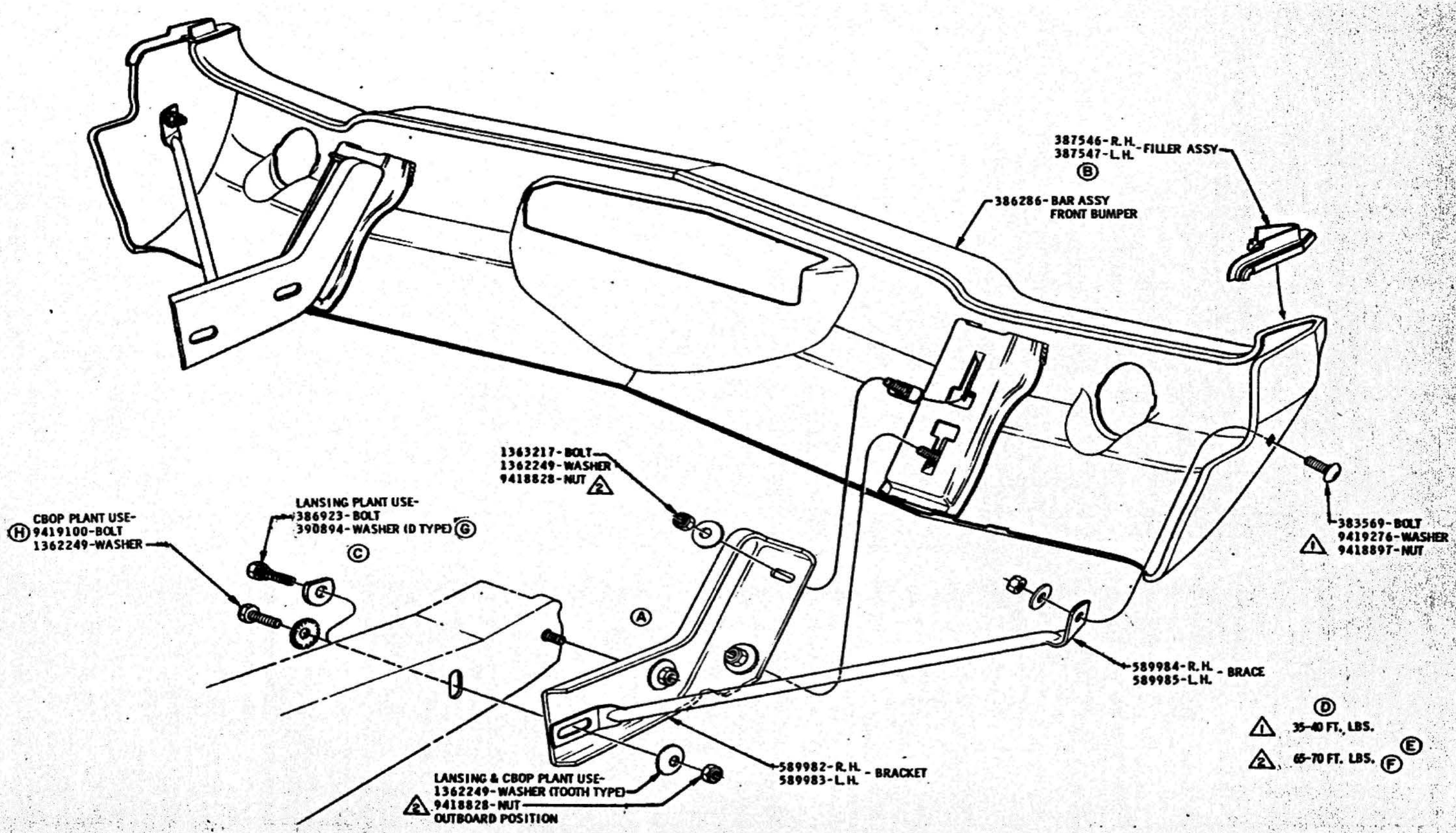

DATE	SYM	REVISION	DR.	CK.	DATE	SYM	REVISION	DR.	CK.	DATE	SYM	REVISION	DR.	CK.
					1-6-66	H	WAS 179882 BOLT	DS	VP	6-18-64	D	TORQUES ADDED	BG	VP
					10-23-64	G	WAS 381468 WASHER	VC	VP	5-7-64	C	FASTENINGS REVISED	BF	VP
					9-30-64	F	WAS 80 FT. LBS	BF	VP	2-6-64	B	FILLER ADDED	JS	VP
					9-2-64	E	TORQUES REVISED	CB	VP	1-23-64	A	REVISED TO DETAILS		
												AND PARTS LIST	BG	VP

INSTALLATION	FRONT BUMPER		
DATE NOV. 6, 1963	FIRST USED 1965	Oldsmobile Graphic Illustration	PAGE 14-2.1
DR. BY JOSEPH H. BALL			
CHECKED H. VAN PELT	SERIES F-85	REV.	PART NO. 386400
APPR.			
APPR.			

OLDSMOBILE DIVISION GENERAL MOTORS CORPORATION LANSING 21, MICHIGAN

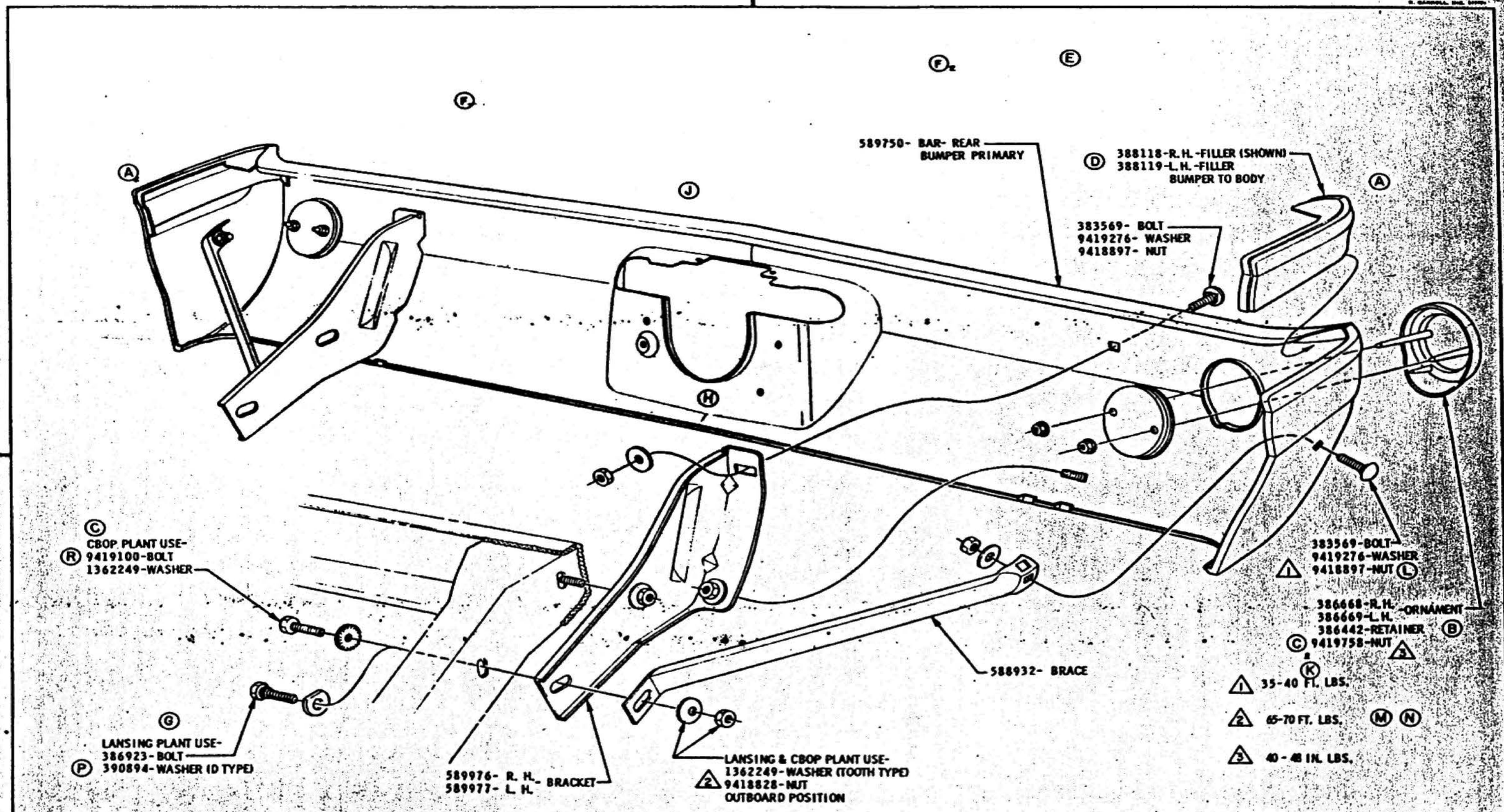

DATE	SYM	REVISION	DR.	CK.	DATE	SYM	REVISION	DR.	CK.	DATE	SYM	REVISION	DR.	CK.
1-29-65	R	WAS ITEMBE BOLT	LC	VP	6-12-64	K	TORQUES ADDED	Bp	VP	3-24-64	E	NOTE REMOVED	Bp	VP
10-23-64	P	WAS 381468 WASHER	LC	VP	6-2-64	J	REINFORCEMENT REM.	Bp	VP	3-9-64	D	WAS 386634-5 FILLER	Bp	VP
9-30-64	N	WAS 80 FT. LBS.	Bp	VP	6-2-64	H	DEFLECTOR REMOVED	Bp	VP	1-23-64	C	PART NUMBERS ADDED	Bp	VP
9-2-64	M	TORQUES REVISED	Bp	VP	5-7-64	G	FASTENINGS REVISED	Bp	VP	11-30-63	B	ORNAMENT ADDED	Bp	VP
6-29-64	L	WAS 382875 NUT	Bp	VP	4-11-64	F	WAS 9420595-BOLT	Bp	VP	11-20-63	A	BUMPER FILLERS ADDED	Bp	VP

INSTALLATION **REAR BUMPER (EXC. S.W.)**

DATE NOV. 6, 1963
DR. BY JOSEPH H. GALL
CHECKED H. VAN PELT
APPR.
APPR.

FIRST USED 1965

Oldsmobile GRAPHIC ILLUSTRATION

DESIGN F-85 | REF. 14A2 | PAGE 14-3.1 | PART NO. 386401

OLDSMOBILE DIVISION GENERAL MOTORS CORPORATION LANSING 21, MICHIGAN

1. 35-40 FT. LBS. (E) (B)4
2. 65-70 FT. LBS. (F)
3. 50 - 60 IN. LBS. (D)

ATTACH FILLER TO PRIMARY BAR WITH 9985027 ADHESIVE.

BUMPER FILLER AND BUMPER CONTACTING SURFACE MUST BE KEPT CLEAN. BOTH THE BUMPER FILLER AND BUMPER CONTACTING SURFACE MUST BE COMPLETELY COATED WITH #9985027 CEMENT PRIOR TO ASSEMBLING FILLER IN BUMPER. CEMENT MUST AIR DRY 2 TO 25 MINUTES BEFORE ASSEMBLING FILLER TO BUMPER. SEPARATION OF THE FILLER FROM THE BUMPER MUST SHOW ADHERENCE OF CEMENT TO ENTIRE RUBBER SURFACE.

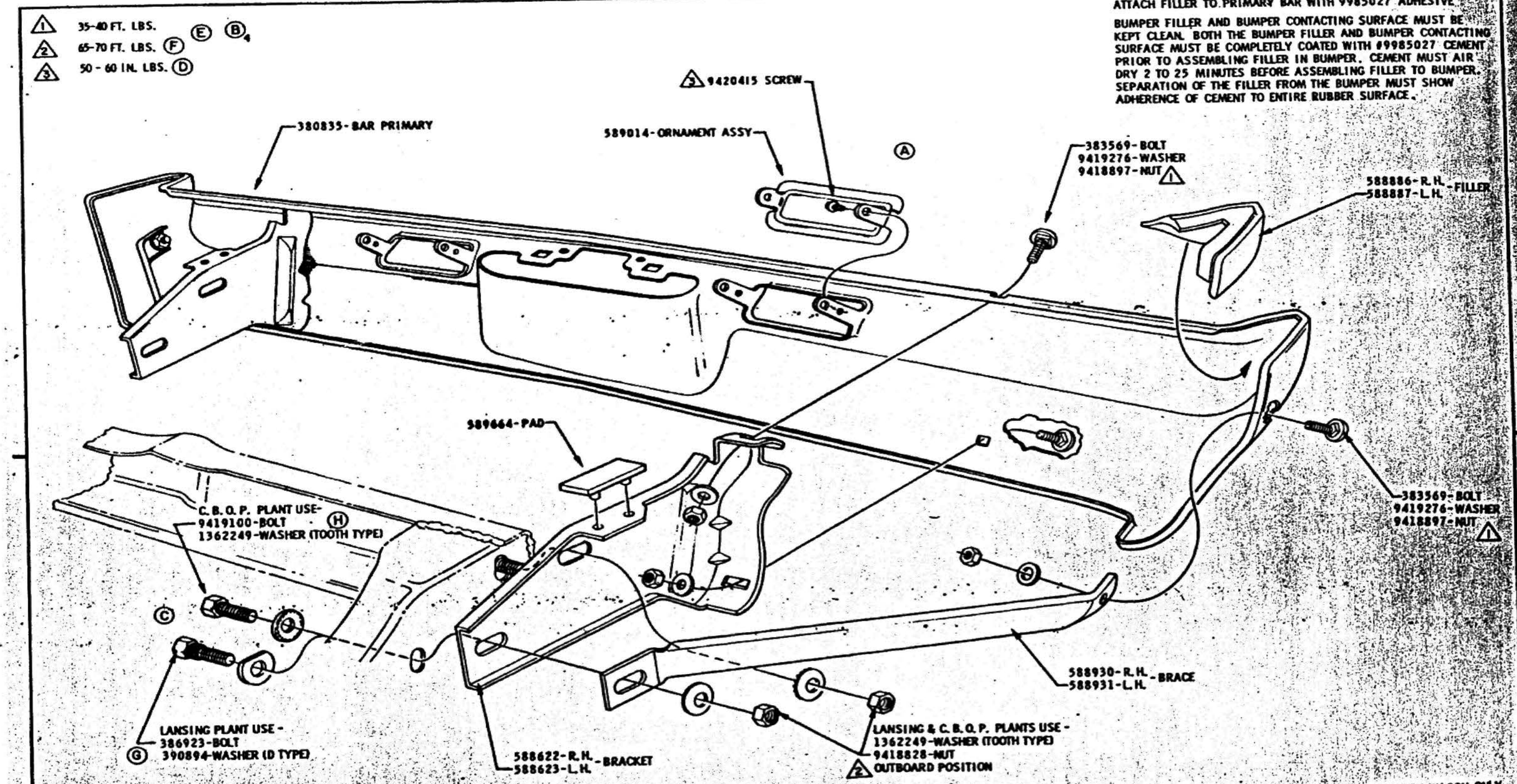

DATE	SYM	REVISION	DR.	CK.	DATE	SYM	REVISION	DR.	CK.	DATE	SYM	REVISION	DR.	CK.
										9-2-64	E	TORQUES ADDED	CB	VP
										6-12-64	D	TORQUE ADDED	BB	HV
					3-11-65	H	WAS 1739882 BOLT	VC	VP	5-7-64	C	FASTENINGS REVISED	BP	VP
					10-23-64	G	WAS 381468 WASHER	VC	VP	4-4-64	B	TORQUE ADDED	CB	VP
					9-30-64	F	WAS 80 FT. LBS.	BP	VP	3-17-64	A	0420613 NUT REMOVED	CB	VP

INSTALLATION — REAR BUMPER-S.W.

DATE OCT 24, 1963
DR. BY JOSEPH H. GALL
CHECKED H. VAN PELT
APPR.
APPR.

FIRST USED 1965 — Oldsmobile Service ILLUSTRATION

SERIES F-85 — REF. 14AE — PAGE 14-4.1 — PART NO. 386402

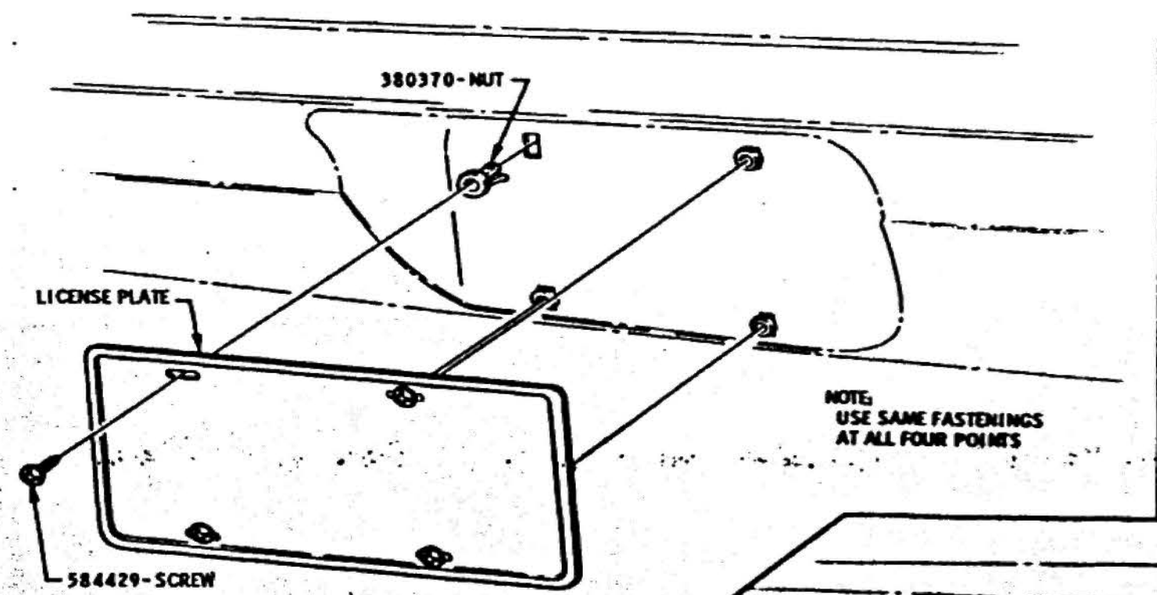

REAR LICENSE FASTENING
(STATION WAGON)

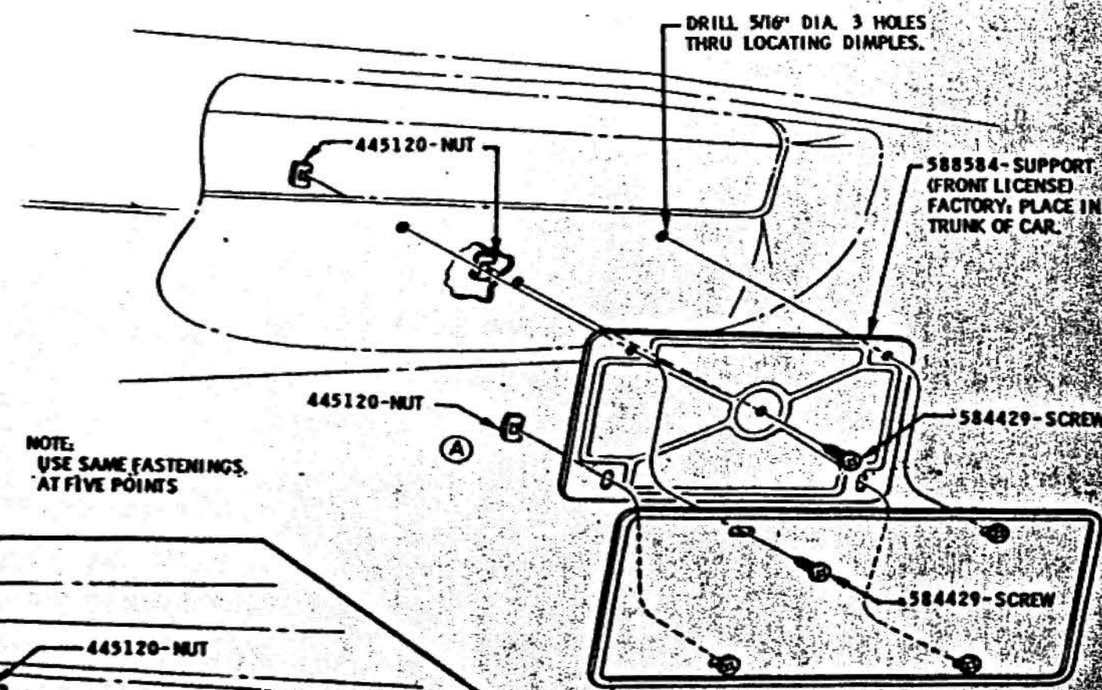

FRONT LICENSE FASTENING
(ALL CARS)

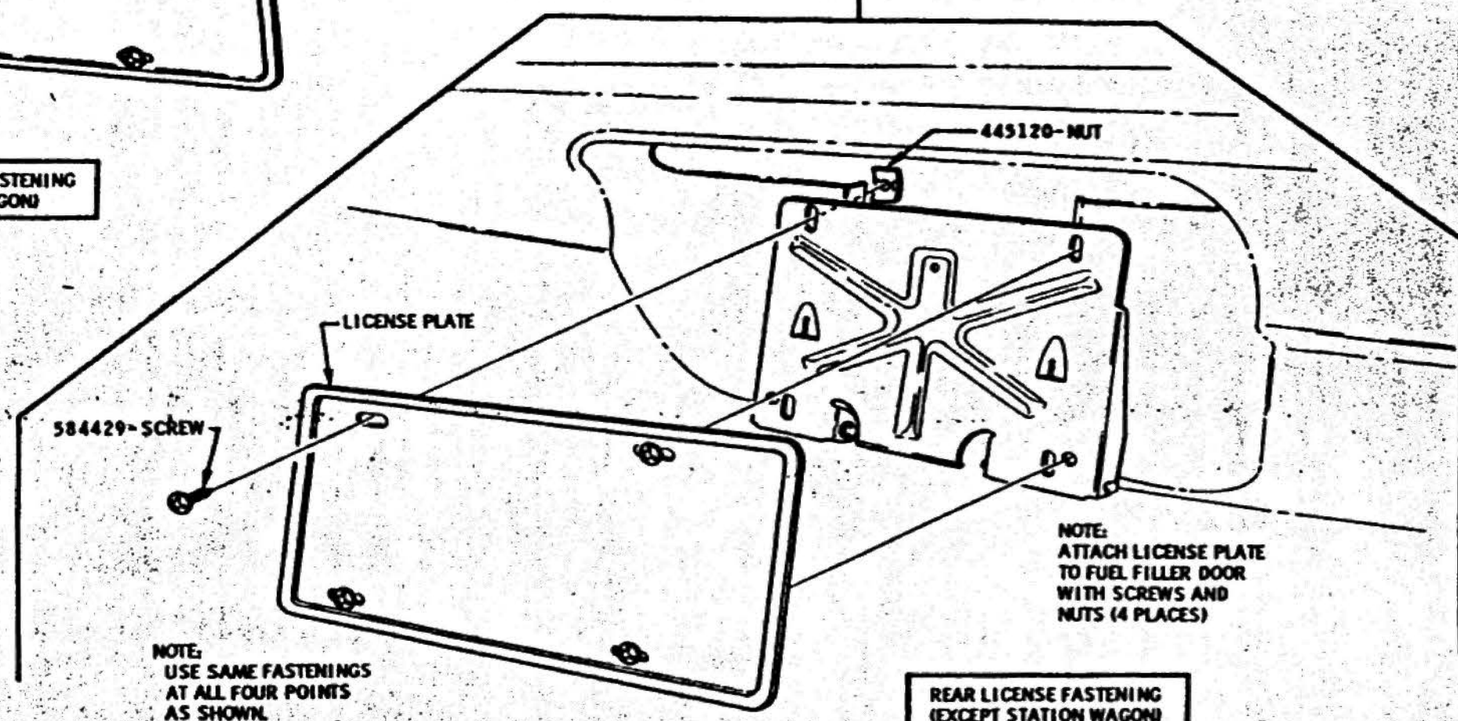

REAR LICENSE FASTENING
(EXCEPT STATION WAGON)

FACTORY:
PLACE LICENSE ATTACHING
PARTS IN 409044-ENVELOPE
AND THEN PLACE IN GLOVE
BOX.

DATE	SYM	REVISION	DR.	CK.	DATE	SYM	REVISION	DR.	CK.	DATE	SYM	REVISION	DR.	CK.
										1073 L4	A	445120-NUT ADDED	CB	VD

INSTALLATION	LICENSE PLATE FASTENING		
DATE DEC. 3, 1963	FIRST USED 1965	Oldsmobile Service ILLUSTRATION	PAGE 14-5.1
DR. BY C.V. BEACHAM			
CHECKED H. VAN PELT			
APPR.	SERIES F-85	REV. 14C	PART NO. 386764
APPR.			

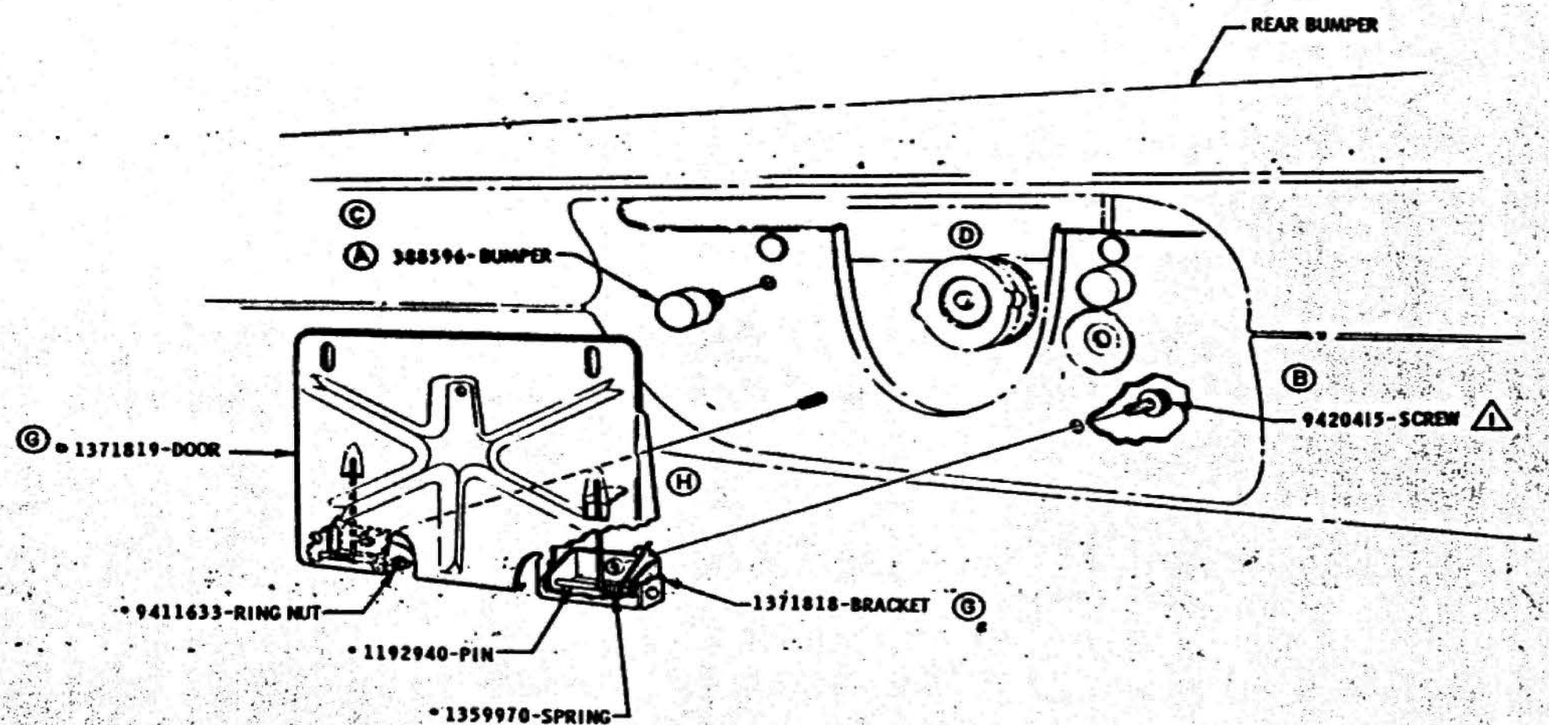

Ⓕ • PART OF 390700- Ⓙ DOOR ASSEMBLY

INSTALLATION
FUEL FILLER DOOR

EXCEPT STATION WAGONS

△1 60-96 IN. LBS. Ⓔ

DATE	SYM	REVISION	DR	CK	DATE	SYM	REVISION	DR	CK	DATE	SYM	REVISION	DR	CK
					9-30-64	J	WAS 388578 DOOR ASSY	CM	VP	6-16-64	E	TORQUE ADDED		VP
					9-18-64	N	TOR RELOCATED		VP	6-2-64	D	REFLECTOR REMOVED		VP
					8-31-64	G2	PART NO'S. REVISED		VP	5-14-64	C	WAS 386910 BUMPER		VP
					6-7-64	F	DOOR PARTS ADDED	BP	DT	1-23-64	B	WAS 9419727 SCREW		VP
										12-11-63	A	386910 BUMPER NO. ADDED		VP

INSTALLATION — FUEL FILLER DOOR

DATE NOV. 18, 1963
DR. BY C. V. BRACHMAN
CHECKED H. VAN PELT
APPR.

FIRST USED 1965 — Oldsmobile Graphic Illustration — PAGE 14-6.1

SERIES F-85 — REF. 8A — PART NO. 386729

AIR CONDITIONING

DRAWING NO.	DRAWING NAME	PAGE NO.
386023	AIR CONDITIONING	35C60 - 2.1
387795	AIR CONDITIONING PROCEDURE CHART	35C60 - 3.1

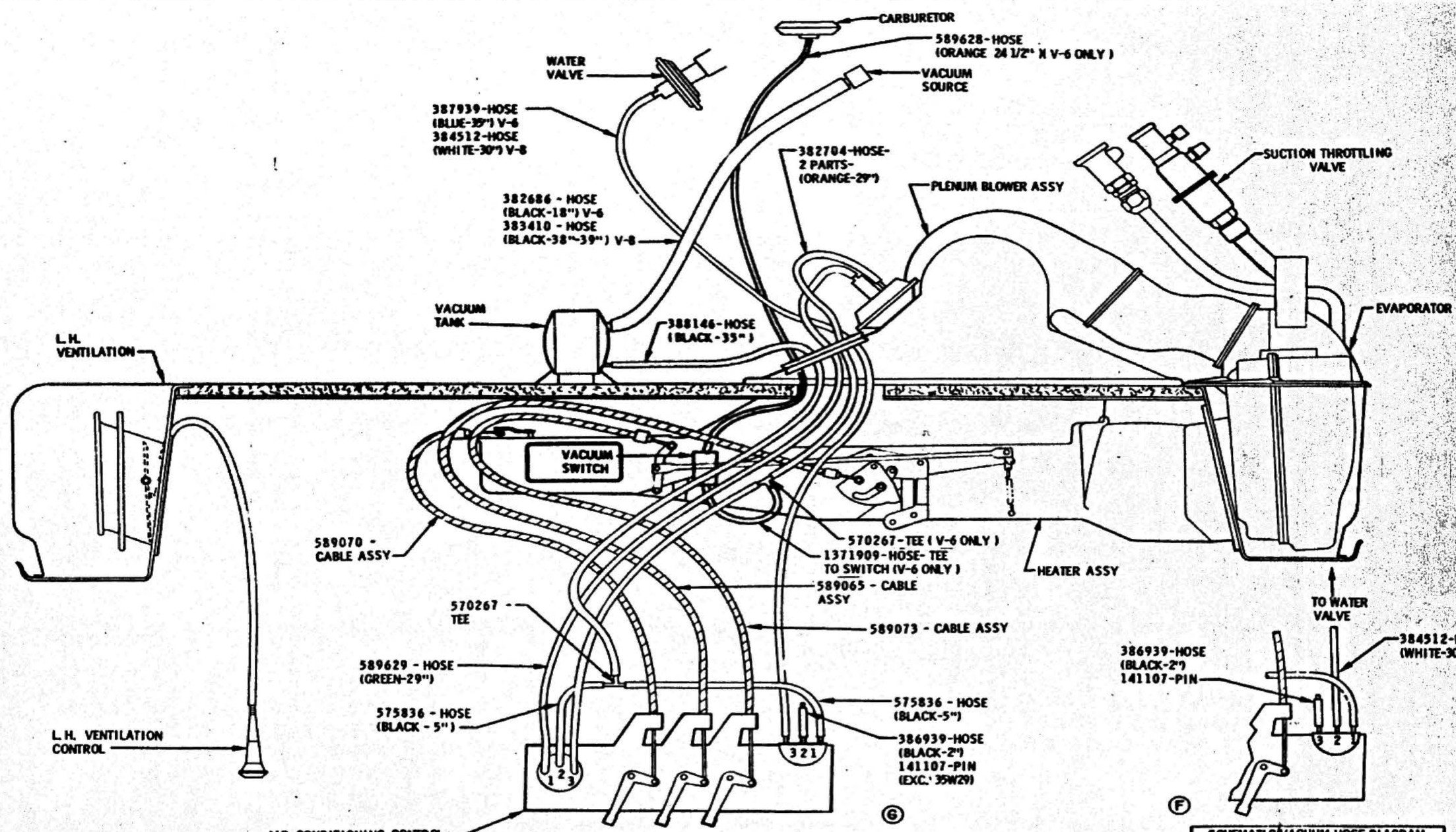

SCHEMATIC VACUUM HOSE DIAGRAM

H SECOND TYPE INSTALLATION (SEE PAGE 2.29 FOR FIRST TYPE INSTALLATION)

SCHEMATIC VACUUM HOSE DIAGRAM WITH 35W29 EQUIPMENT

DATE	SYM	REVISION	DR.	CK.	DATE	SYM	REVISION	DR.	CK.	DATE	SYM	REVISION	DR.	CK.
										7-14-64	E	WAS 386129 HOSE		VP
					11-19-64	H	WAS PAGE 2.30		VP	6-12-64	D	V6 INFO. ADDED		VP
					9-24-64	G	FIRST TYPE INFORMATION			4-22-64	C	HOSES REVISED		VP
							REMOVED SECOND TYPE ADDED		VP	4-11-64	B	WAS 385088-HOSE		VP
					9-24-64	F	35W29 INFORMATION ADD		VP	4-4-64	A	VIEW REVISED		VP

INSTALLATION	AIR CONDITIONING		
DATE DECEMBER 27, 1963	FIRST USED 1965	Oldsmobile Service ILLUSTRATION	PAGE 35C60-2.1
DR. BY KESTER			
CHECKED H. VAN PELT	REVISED F-85	REF. 35C60	PART NO. 386023
APPR.			
APPR.			

OLDSMOBILE DIVISION GENERAL MOTORS CORPORATION LANSING 21, MICHIGAN

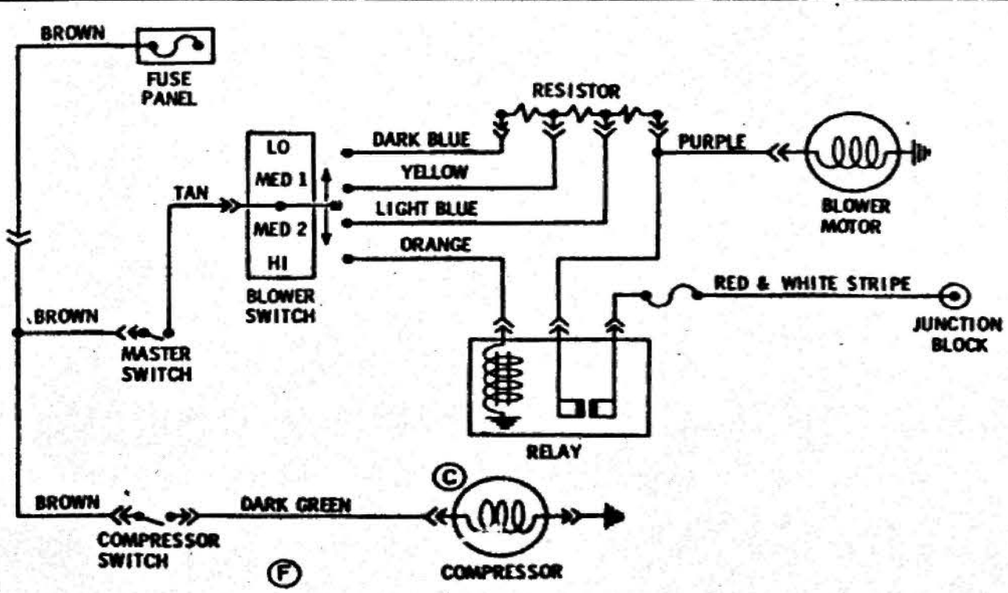

SCHEMATIC WIRING DIAGRAM

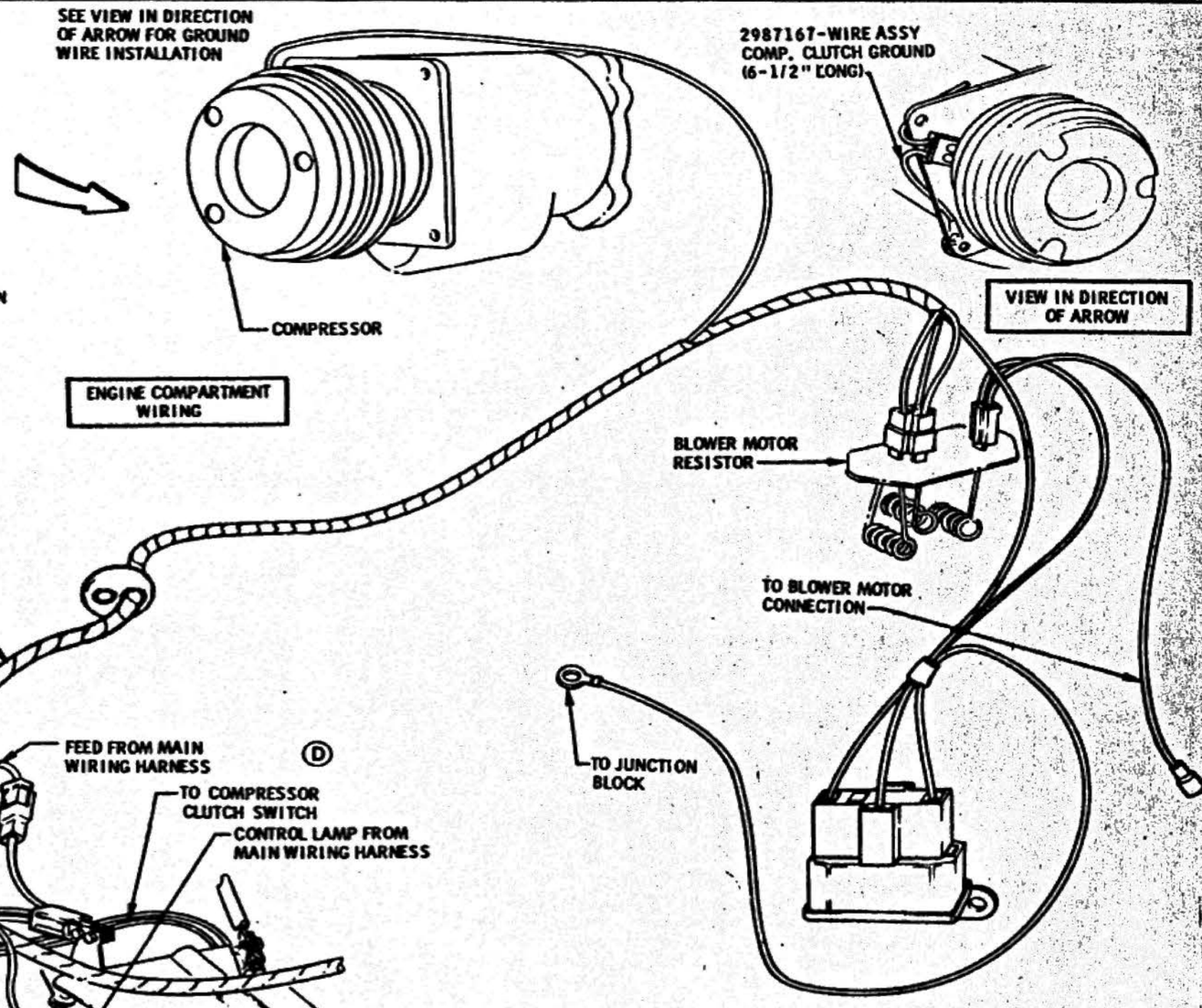

ENGINE COMPARTMENT WIRING

INSTRUMENT PANEL AREA WIRING

DATE	SYM	REVISION	DR.	CK.	DATE	SYM	REVISION	DR.	CK.	DATE	SYM	REVISION	DR.	CK.
										9-18-64	E	WAS 455044 FUSE 25 AMP		VD
										8-7-64	D	WIRING REVISED		DT
										6-19-64	C	SCHEMATIC WIRING REV	BD	VD
										3-17-64	B	SWITCH REMOVED		VD
					12-14-64	F	SCHEMATIC WIRING REV.		VD	3-17-64	A	WIRING DIAGRAM REV'D.		VD

INSTALLATION	AIR CONDITIONING		
DATE DECEMBER 27, 1963	FIRST USED 1965	Oldsmobile GRAPHIC ILLUSTRATION	PAGE 35C60-2.2
DR. BY KESTER			
CHECKED H. VAN PELT			
APPR.	SERIES F-85	REF. 35C60	PART NO. 386023
APPR.			

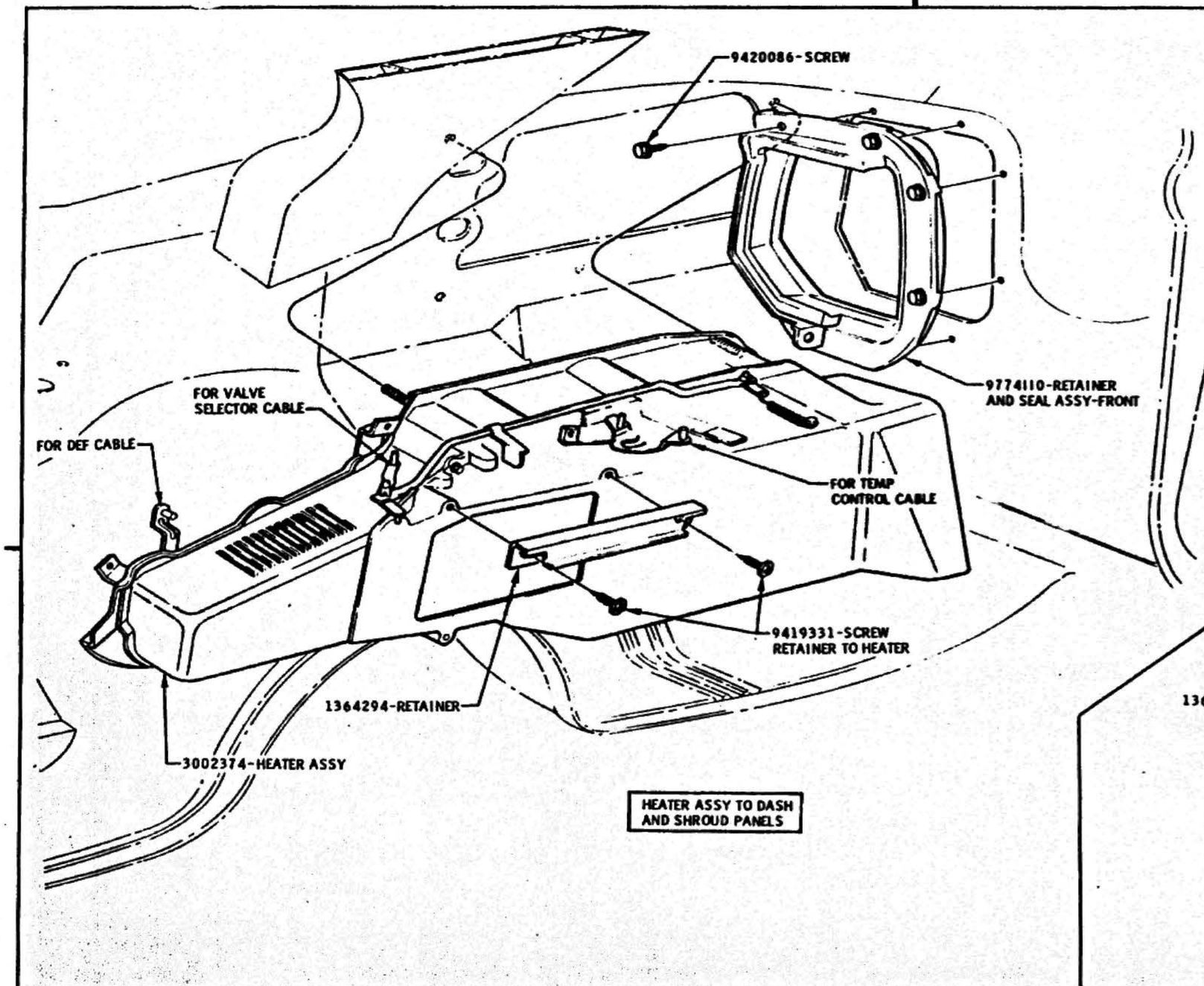

HEATER ASSY TO DASH AND SHROUD PANELS

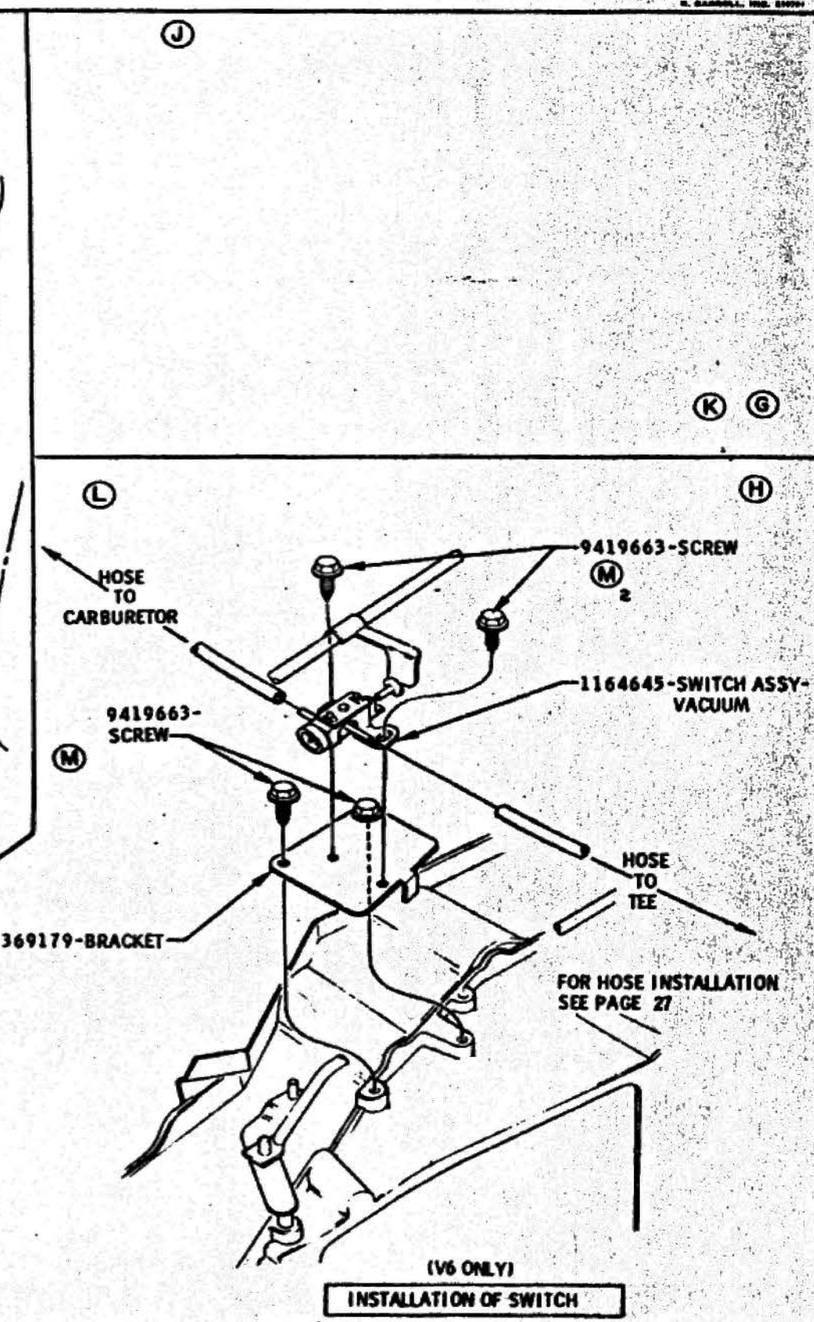

INSTALLATION OF SWITCH

DATE	SYM	REVISION	DR.	CK.	DATE	SYM	REVISION	DR.	CK.	DATE	SYM	REVISION	DR.	CK.
										7-31-64	L	SWITCH REMOVED	MG	VD
										7-31-64	K	VIEW REMOVED	MG	VD
										7-14-66	J	WAS 9421485-SCREW	BP	BP
										6-12-64	H	V6 INFOR. ADDED	MG	VD
					8-13-64	Ms	SCREW QUANTITY REVISED	MA	DT	6-3-64	G	VIEW "A" REMOVED	MG	VD

INSTALLATION	AIR CONDITIONING		
DATE DECEMBER 27, 1963	FIRST USED 1965	Oldsmobile GRAPHIC ILLUSTRATION	PAGE 35C60-2.3
DR. BY KEISTER			
CHECKED H. VAN PELT	SERIES F-85	REF. 35C60	PART NO. 386023
APPR.			
APPR.			

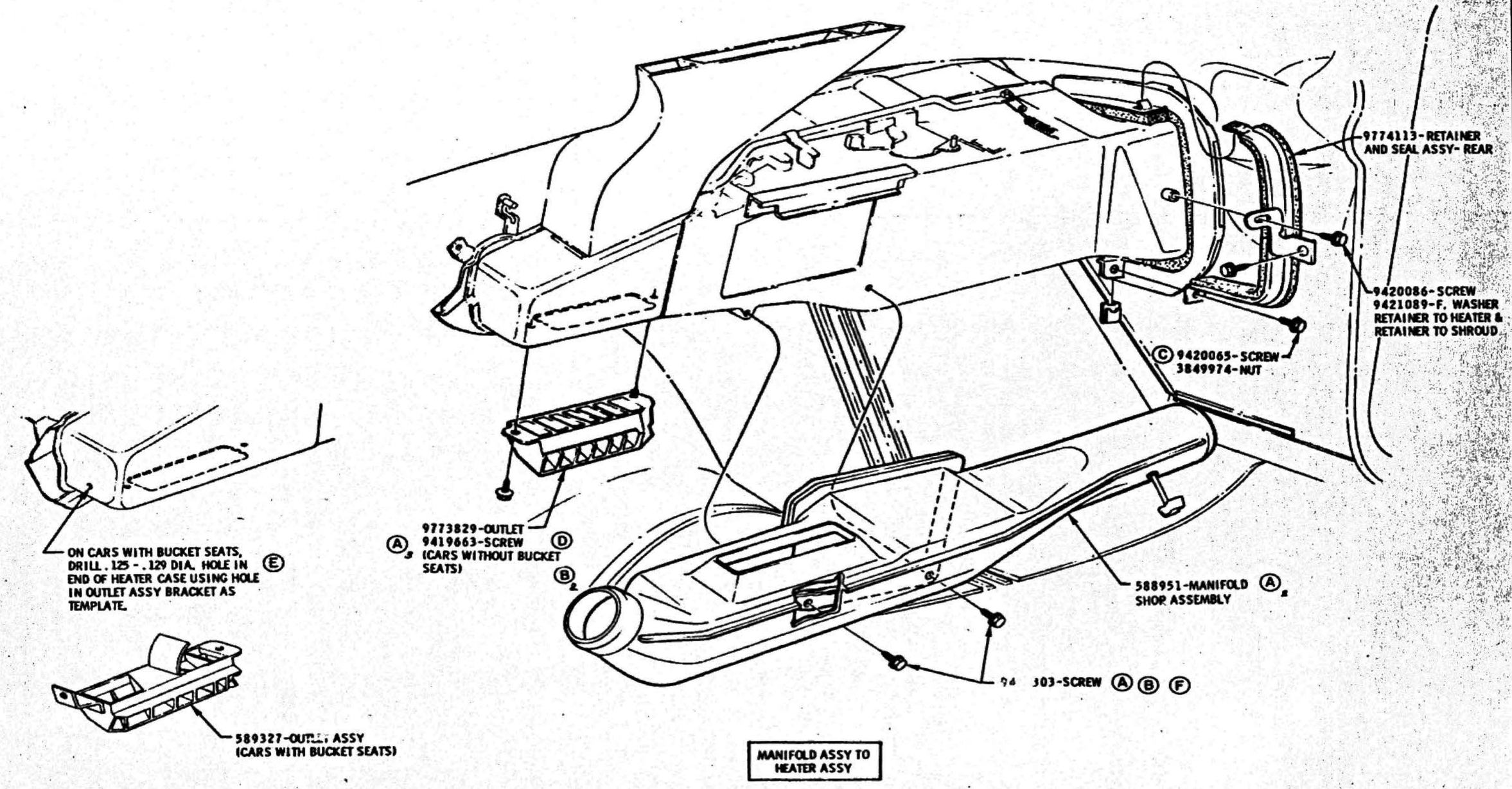

DATE	SYM	REVISION	DR.	CK.	DATE	SYM	REVISION	DR.	CK.	DATE	SYM	REVISION	DR.	CK.
										8-18-64	E	WAS .144-.147-DIA HOLE	BP	VP
										8-18-64	D	WAS 9419303-SCREW	BP	VP
										6-3-64	C	PART NUMBERS REVISED	BP	VP
										1-30-64	B	SCREW NUMBERS REVISED	BP	VP
					10-23-64	F	WAS 9420818 SCREWS	BP	VP	1-14-64	A	PART NOS. REVISED	BP	VP

INSTALLATION	AIR CONDITIONING		
DATE DECEMBER 27, 1963	FIRST USED 1965	Oldsmobile GRAPHIC ILLUSTRATION	PAGE 35C60-2.4
DR. BY KESTER			
CHECKED H. VAN PELT	SERIES F-85	REF. 85C60	PART NO. 386023
APPR.			
APPR.			

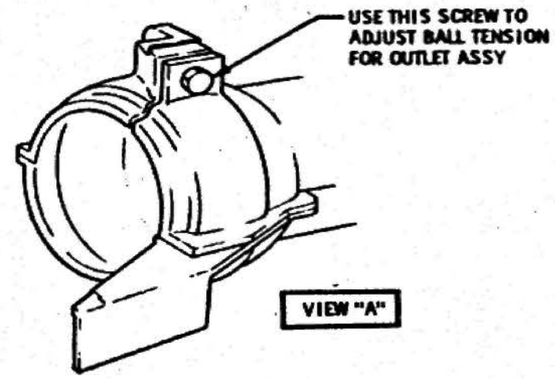

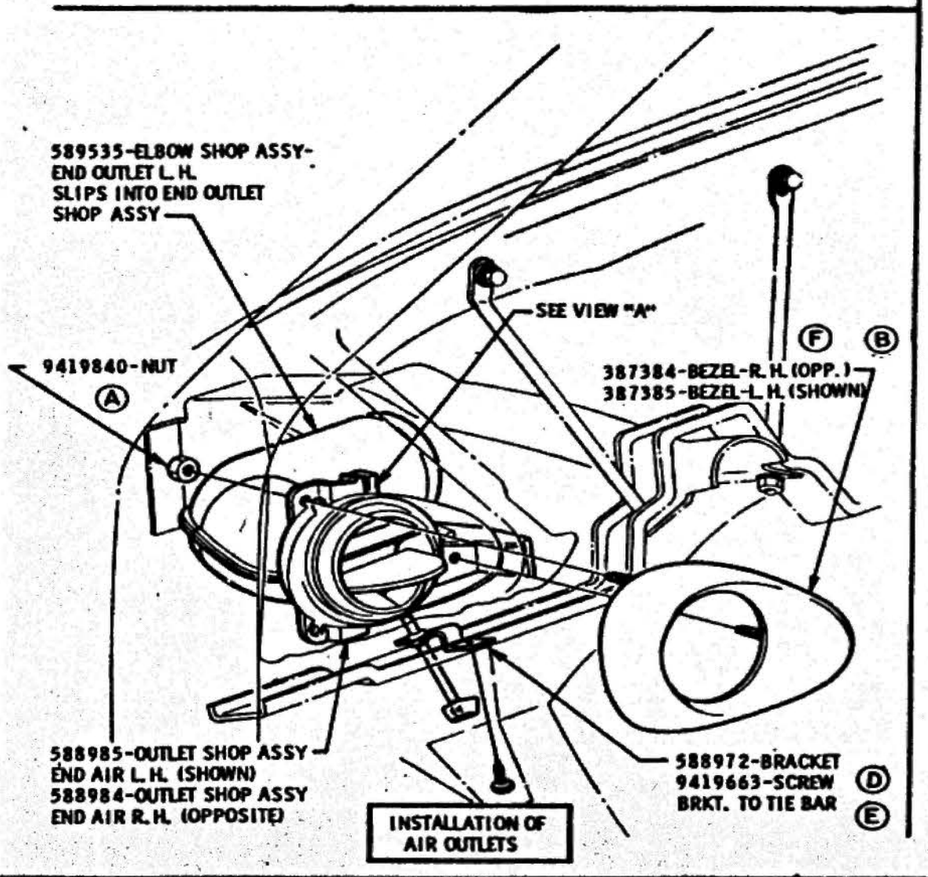

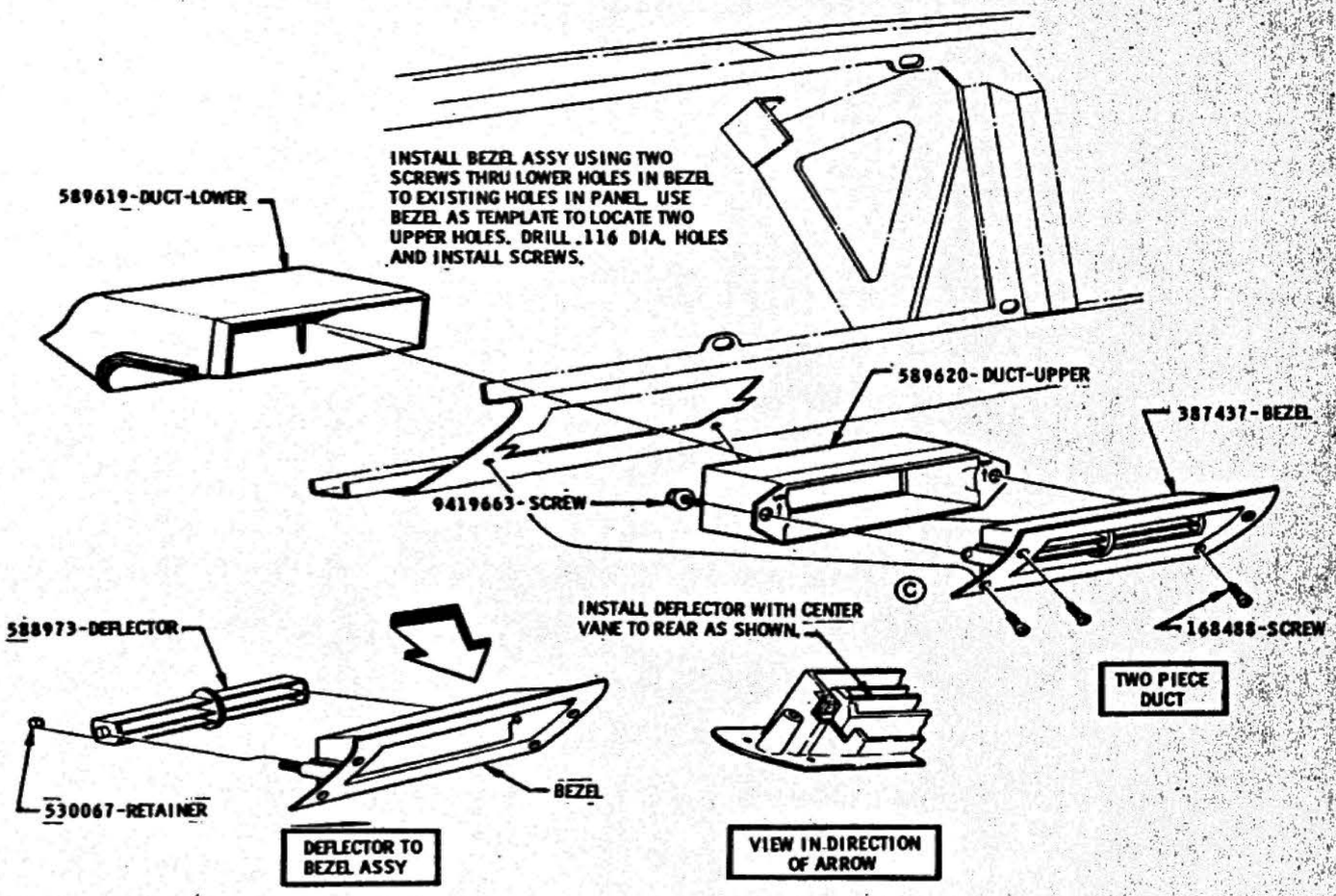

DATE	SYM	REVISION	DR.	CK.
4-1-64	F	NOTE REVISED		

DATE	SYM	REVISION	DR.	CK.
3-24-64	E	WAS 9422561 SCREW		VP
3-17-64	D	WAS 9419663 SCREW		VP
2-6-64	C	REVISED TO DETAIL		VP
2-6-64	B	WAS 5089704 BEZELS		VP
2-6-64	A	WAS 9419784 NUT		VP

INSTALLATION

DATE JANUARY 2, 1964
DR. BY C.K. BEACHWAY
CHECKED H. VAN PELT
APPR.
APPR.

AIR CONDITIONING

FIRST USED 1965

Oldsmobile GRAPHIC ILLUSTRATION

BODIES F-85

REF. 35C60

PAGE 35C60-2.5

PART NO. 386023

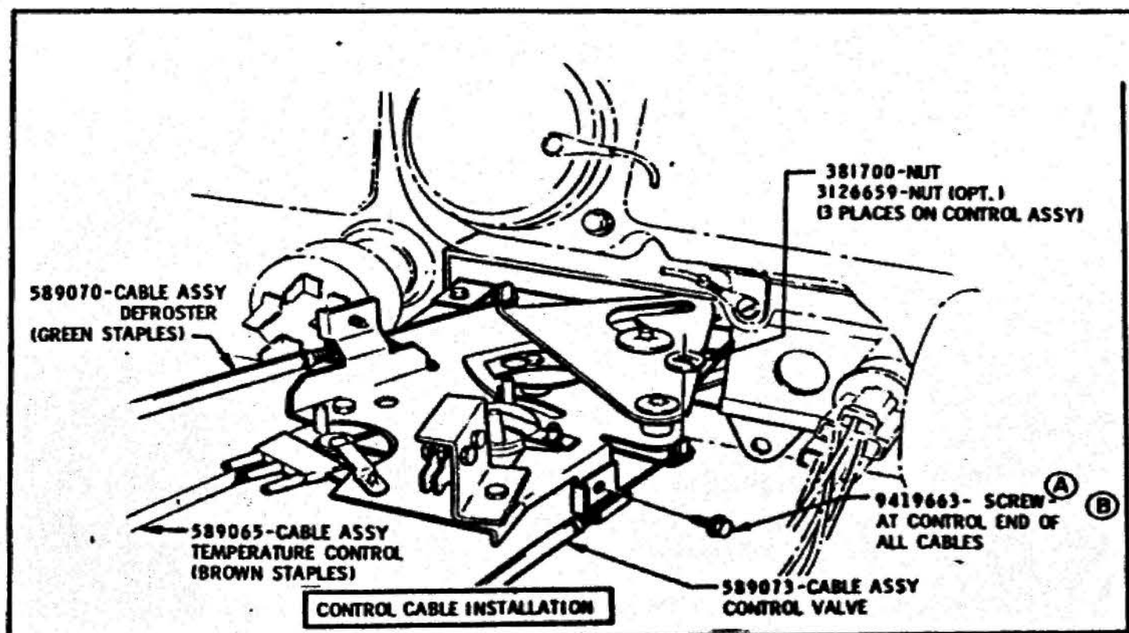

CONTROL CABLE INSTALLATION

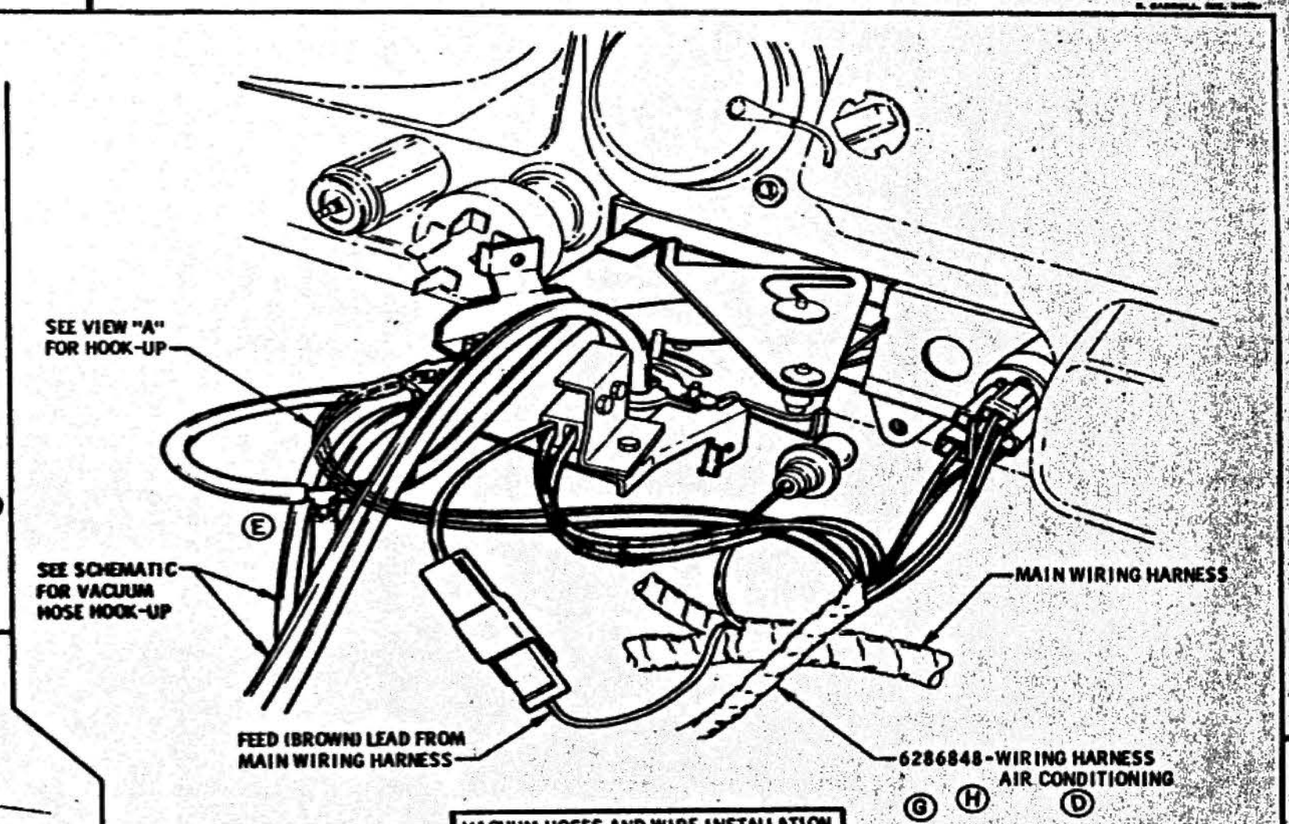

VACUUM HOSES AND WIRE INSTALLATION

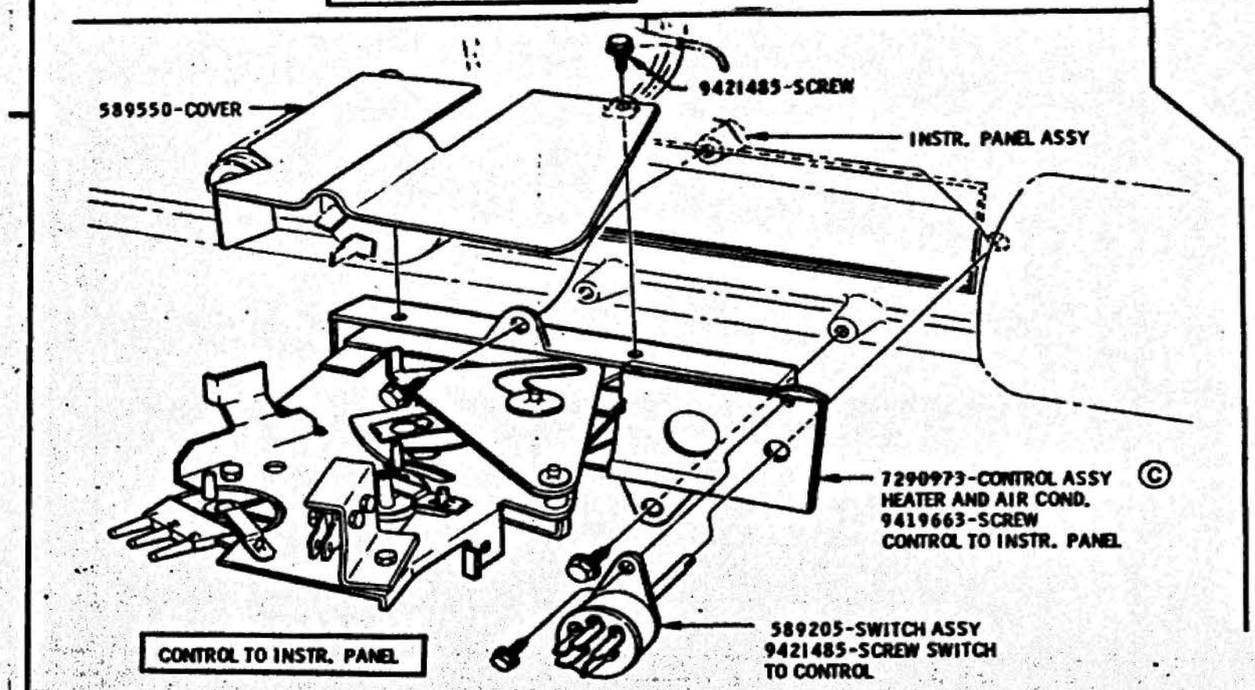

CONTROL TO INSTR. PANEL

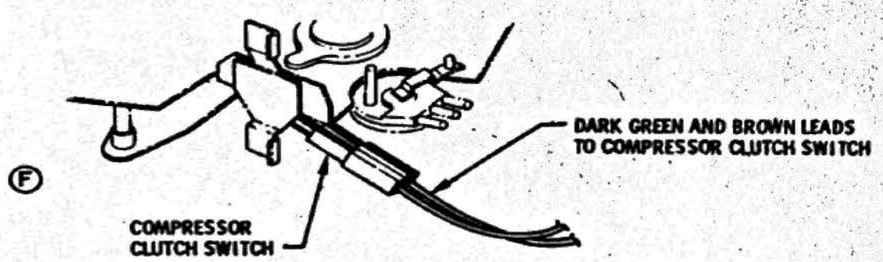

VIEW "A"

DATE	SYM	REVISION	DR.	CK.	DATE	SYM	REVISION	DR.	CK.	DATE	SYM	REVISION	DR.	CK.
										4-22-64	E	HOSE ADDED		VD
										4-11-64	D	WAS 2989740-HARNESS		VD
					12-14-64	H	WAS 2989382-HARNESS		VD	2-21-64	C	WAS 7209678 CONT. ASSY		VD
					8-13-64	G	WAS 2989192-HARNESS		DT	2-21-64	B	WAS 9422207-SCREW		VD
					8-13-64	F	VIEW ADDED		DT	1-14-64	A	WAS 3833221-SCREW		VD

INSTALLATION	AIR CONDITIONING		
DATE DECEMBER 27, 1963	FIRST USED 1965	Oldsmobile GRAPHIC ILLUSTRATION	PAGE 35C60-2.6
DR. BY KESTER			
CHECKED H. VAN PELT	SERIES F-85	REF. 35C60	PART NO. 386023
APPR.			
APPR.			

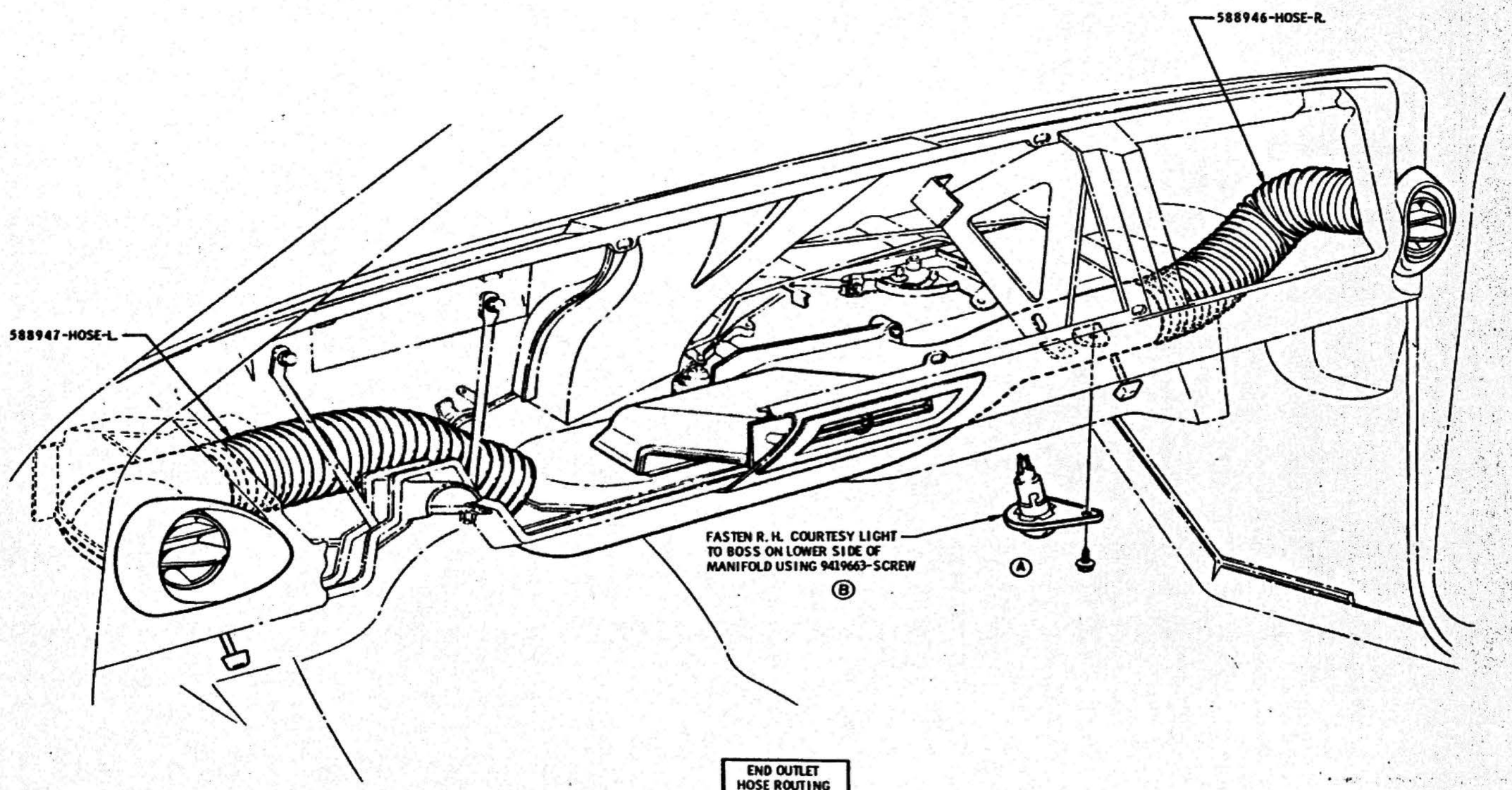

END OUTLET HOSE ROUTING

DATE	SYM	REVISION	DR.	CK.	DATE	SYM	REVISION	DR.	CK.	DATE	SYM	REVISION	DR.	CK.
										7-31-64	B	WAS 9419303 - SCREW	UD	VP
										4-16-64	A	REVISED TO DETAIL	CB	VP

INSTALLATION	AIR CONDITIONING		
DATE JANUARY 2 1964	FIRST USED 1965	Oldsmobile GRAPHIC ILLUSTRATION	PAGE 35C60-2.7
DR. BY C.V. BEACHNAU			
CHECKED H. VAN DELT	SERIES F-85	REF. 35C60	PART NO. 386023
APPR.			
APPR.			

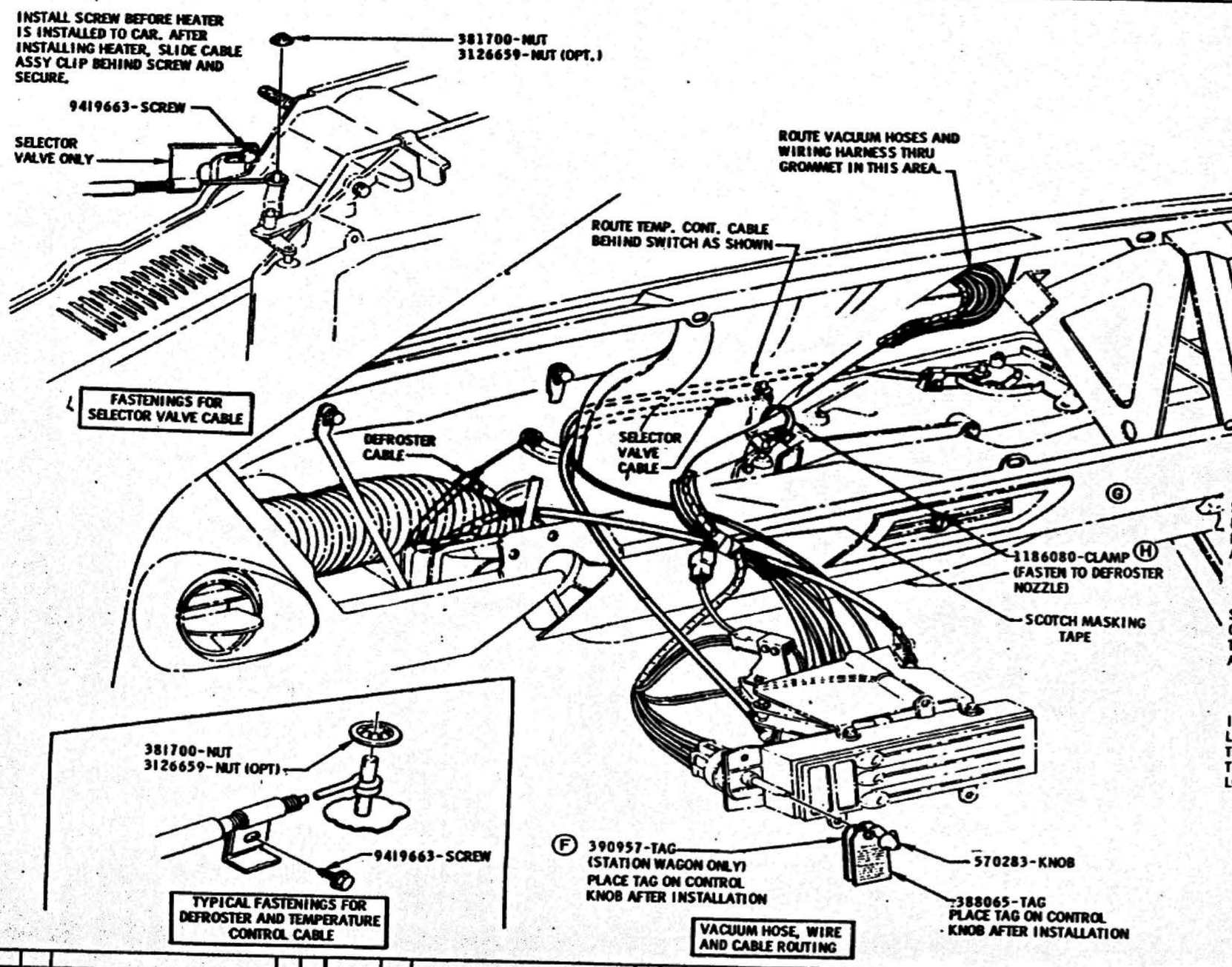

CABLE AND SWITCH ADJUSTMENTS

DEFROSTER DOOR CABLE

SET HEAT-DEFROST LEVER IN THE OFF POSITION. ATTACH CABLE TO DEFROSTER DOOR CRANK PIN. HOLD DEFROSTER DOOR IN THE CLOSED POSITION (SEALING OFF DEFROSTER OUTLET) AND TIGHTEN CABLE ATTACHING SCREW.

HEATER- AIR CONDITIONING SELECTOR DOOR CABLE

SET AIR CONDITIONING LEVER IN THE "NORMAL" POSITION. ATTACH CABLE TO DOOR CRANK PIN. HOLD SELECTOR DOOR OPEN AGAINST THE SEAL (AIR CONDITIONING POSITION) AND TIGHTEN CABLE ATTACHING SCREW.

TEMPERATURE DOOR CABLE

INSERT .190 DIAMETER PIN IN HOLE IN CAM AND CAM SUPPORT TO LOCK TEMPERATURE DOOR IN FULL COLD POSITION. ATTACH CABLE TO PIN ON CAM AND SET TEMPERATURE LEVER TO LEFT END OF SLOT. TIGHTEN CABLE ATTACHING SCREW. TEMPERATURE DOOR HAS CAM LOCK AND WILL NOT SPRING BACK.

DATE	SYM	REVISION	DR.	CK.	DATE	SYM	REVISION	DR.	CK.	DATE	SYM	REVISION	DR.	CK.
										8-8-64	E	NOTE REMOVED	BP	VP
										6-18-64	D	CABLE ROUTING REVISED	AG	DT
					12-8-64	H	1186080-CLAMP REINST.	BP	VP	6-3-64	C	CABLE FASTENINGS REV.	BP	VP
					11-19-64	G	1186080-CLAMP REMOVED	BP	VP	4-11-64	B	PART NO. ADDED	BP	VP
					10-30-64	F	390957-TAG ADDED	BP	VP	3-17-64	A	388065 TAG ADDED	BP	VP

INSTALLATION	AIR CONDITIONING		
DATE DECEMBER 27, 1963	FIRST USED 1965	Oldsmobile Service ILLUSTRATION	PAGE 35C60-2.8
DR. BY KESTER			
CHECKED H. VAN PELT			
APPR.	SERIES F-85	REV. 35C60	PART NO. 386023
APPR.			

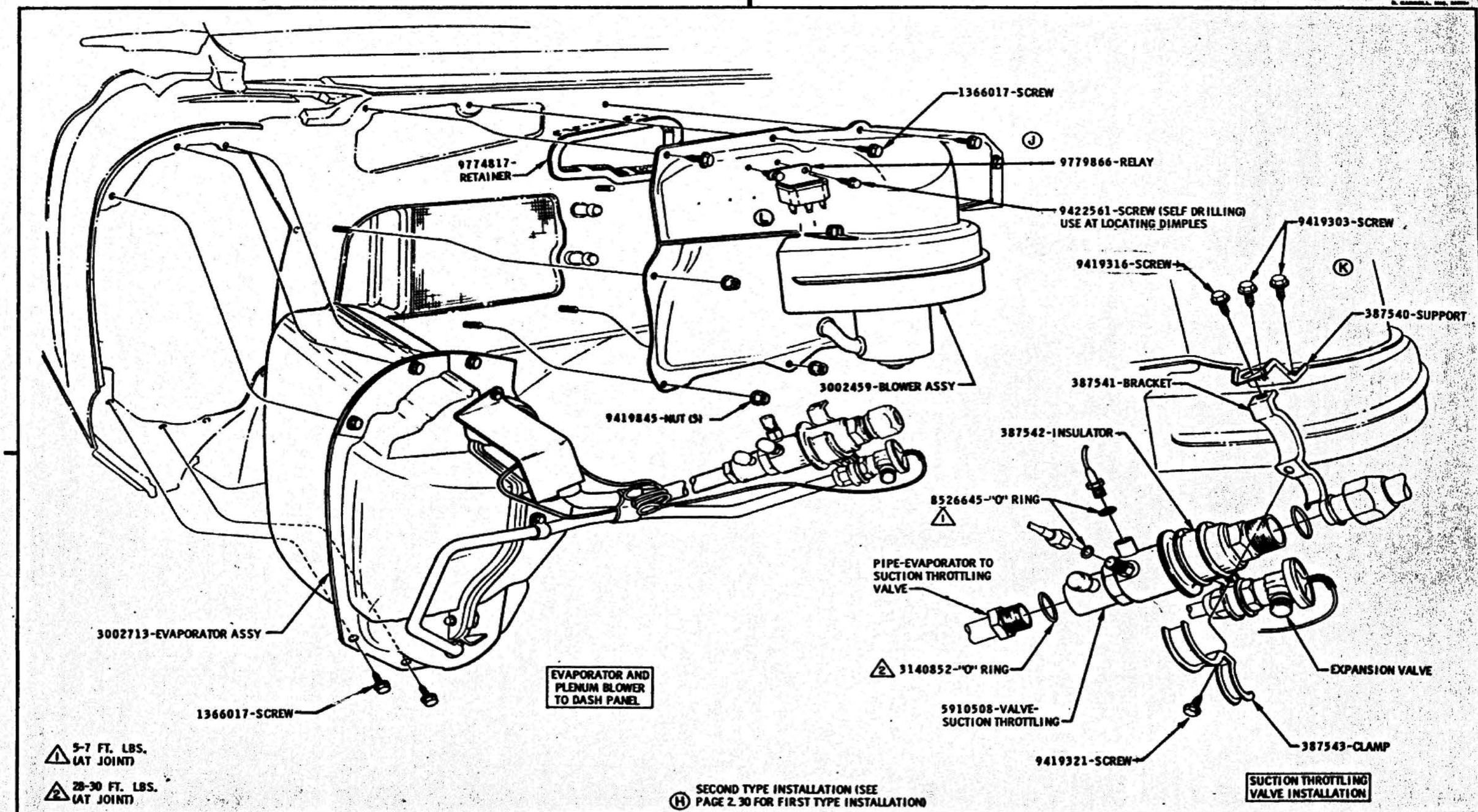

DATE	SYM	REVISION	DR.	CK.	DATE	SYM	REVISION	DR.	CK.	DATE	SYM	REVISION	DR.	CK.
										2-5-65	K	CLIP REMOVED	GG	VP
										12-14-64	J	RELAY ADDED	"G	VD
										11-24-64	H	HH3 PAGE 2.31	JC	VD
										9-24-64	G	FIRST TYPE INFORMATION		
					5-14-65	L	RELAY REVISED	CA	VP			REMOVED SECOND TYPE ADD.	"G	VP

INSTALLATION — AIR CONDITIONING

DATE DECEMBER 27, 1963
DR. BY KESTER
CHECKED H. VAN PELT
APPR.
APPR.

FIRST USED 1965 — Oldsmobile ILLUSTRATION — PAGE 35C60-2.9

SERIES F-85 — REF. 35C60 — PART NO. 386023

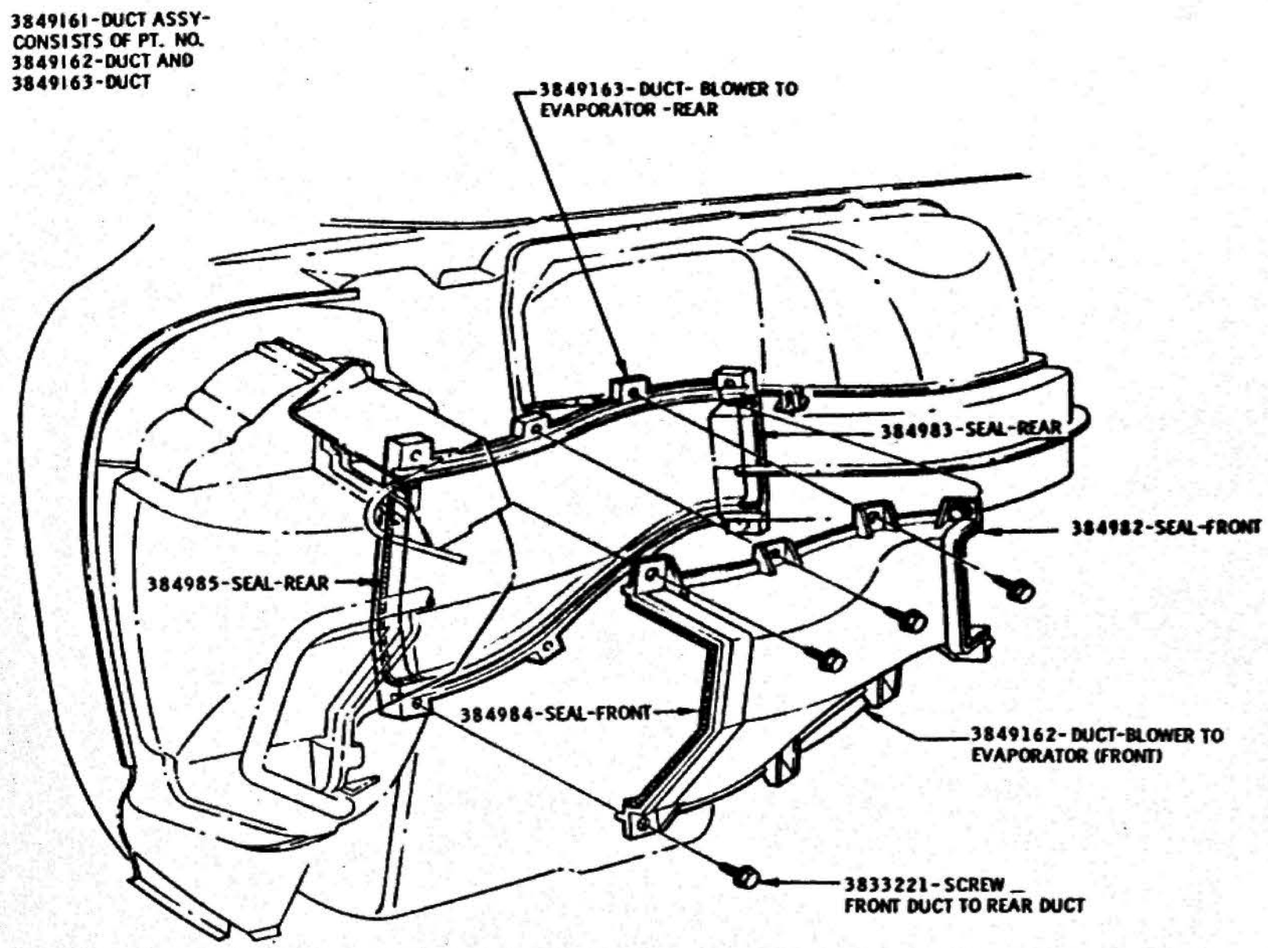

DUCT ASSEMBLY
BLOWER TO EVAPORATOR

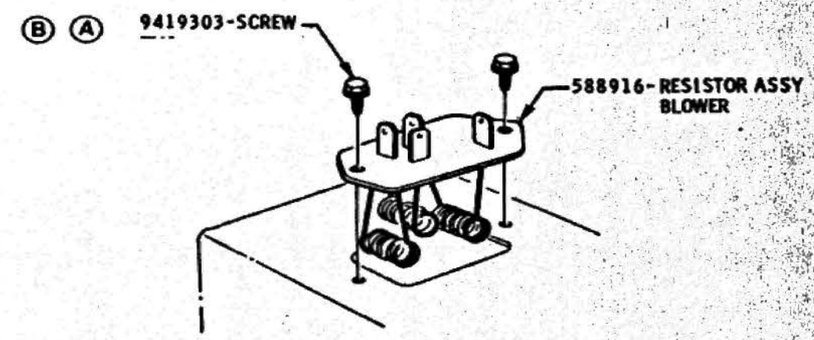

FIG. 1
INSTALLATION OF
BLOWER RESISTOR ASSY

DATE	SYM	REVISION	DR.	CK.	DATE	SYM	REVISION	DR.	CK.	DATE	SYM	REVISION	DR.	CK.
										1-30-64	B	WAS 9419663-SCREW	BP	JP
										1-14-64	A	WAS 9419303-SCREW	BP	JP

INSTALLATION AIR CONDITIONING

DATE DECEMBER 27, 1963
DR. BY K. ESTER
CHECKED H. VAN PELT
APPR.
APPR.

FIRST USED 1965
Oldsmobile GRAPHIC ILLUSTRATION
SERIES F-85
REF. 35C60
PAGE 35C60-2.10
PART NO. 386023

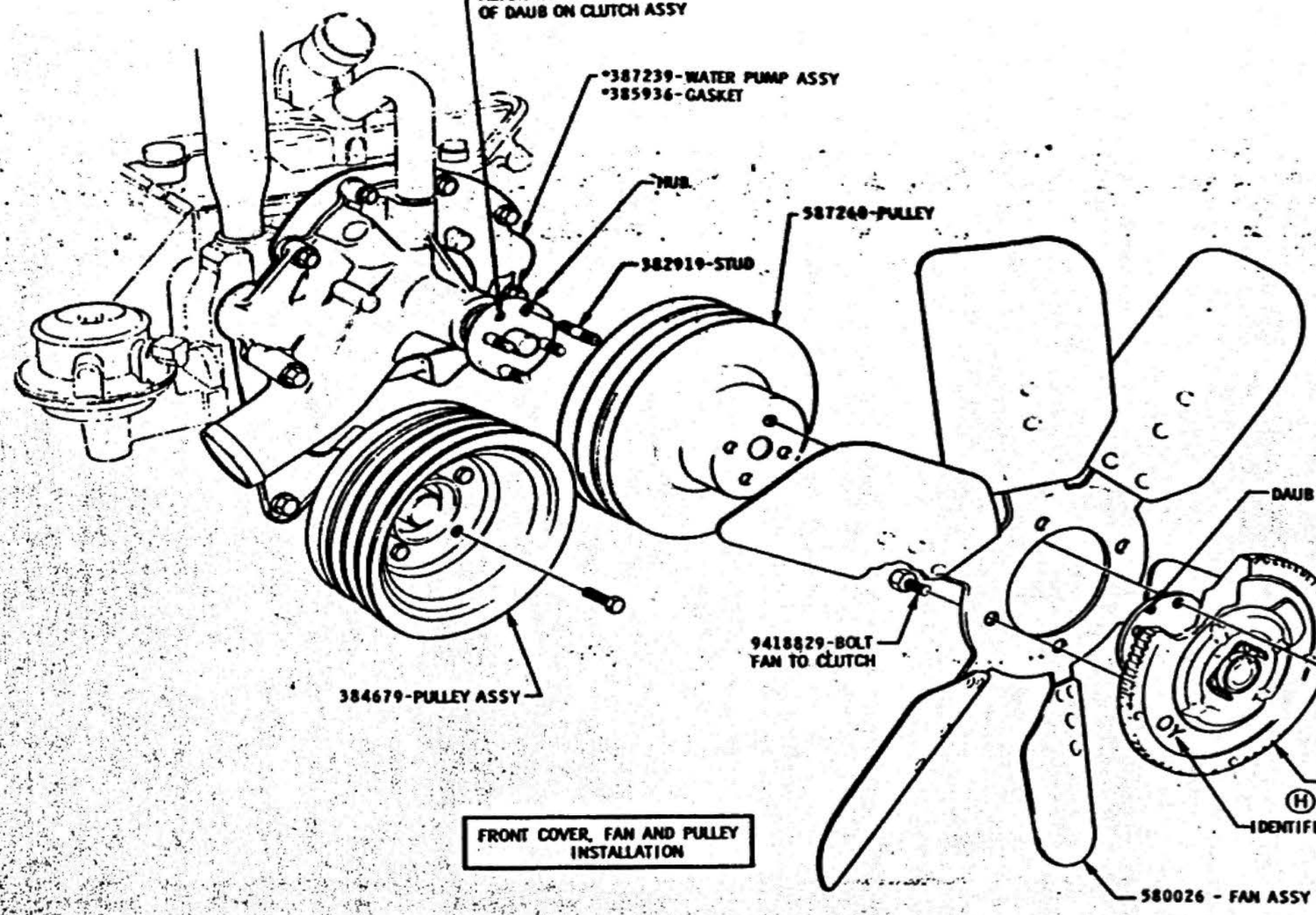

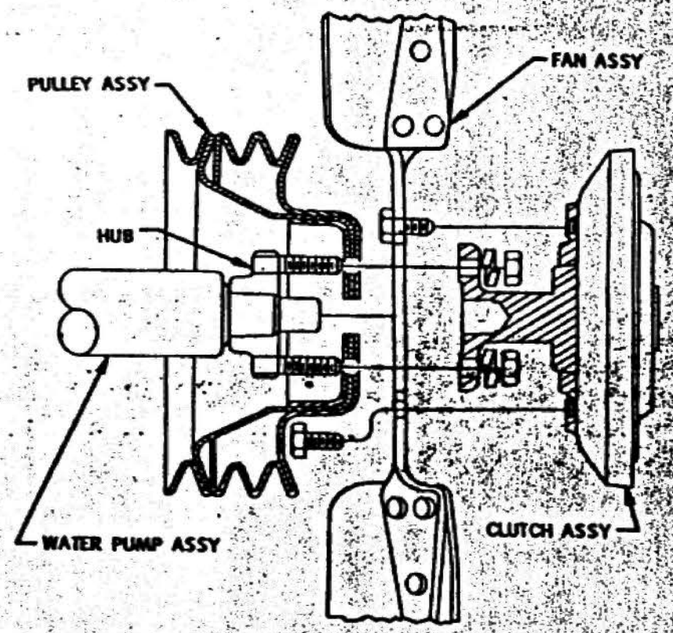

FRONT COVER, FAN AND PULLEY INSTALLATION

PARTS MARKED WITH ASTERISK TO BE ASSEMBLED TO SYNCROMESH ENGINES ONLY. THESE ENGINES ALSO REQUIRE THE FOLLOWING CARBURETORS:
J 2 BBL - 7025259-CARBURETOR ASSY
4 BBL - 7025158-CARBURETOR ASSY

FOR CARS WITH V-8 ENGINE

DATE	SYM	REVISION	DR.	CK.	DATE	SYM	REVISION	DR.	CK.	DATE	SYM	REVISION	DR.	CK.
										5-11-64	E	IDENTIFICATION CODE ADDED	AG	VP
					2-4-65	J	7025259 WAS 7025156			4-16-64	D	NOTE ADDED	AG	VP
					1-29-65	H	387700 CLUTCH ADDED		VP	4-16-64	C	WAS 383013 COVER		VP
					12-1-64	G	PAINT NOTE ADDED		VP	4-11-64	B	WASHER ADDED		VP
					6-3-64	F	WASHER REMOVED		VP	4-11-64	A	PART NOS. REMOVED		VP

INSTALLATION — AIR CONDITIONING

DATE DECEMBER 27, 1963
DR. BY KESTER
CHECKED H. VAN PELT
APPR.
APPR.

FIRST USED 1965
Oldsmobile ILLUSTRATION
DESIGN F-85
REF. 35C60
PAGE 35C60-2.11
PART NO. 386023

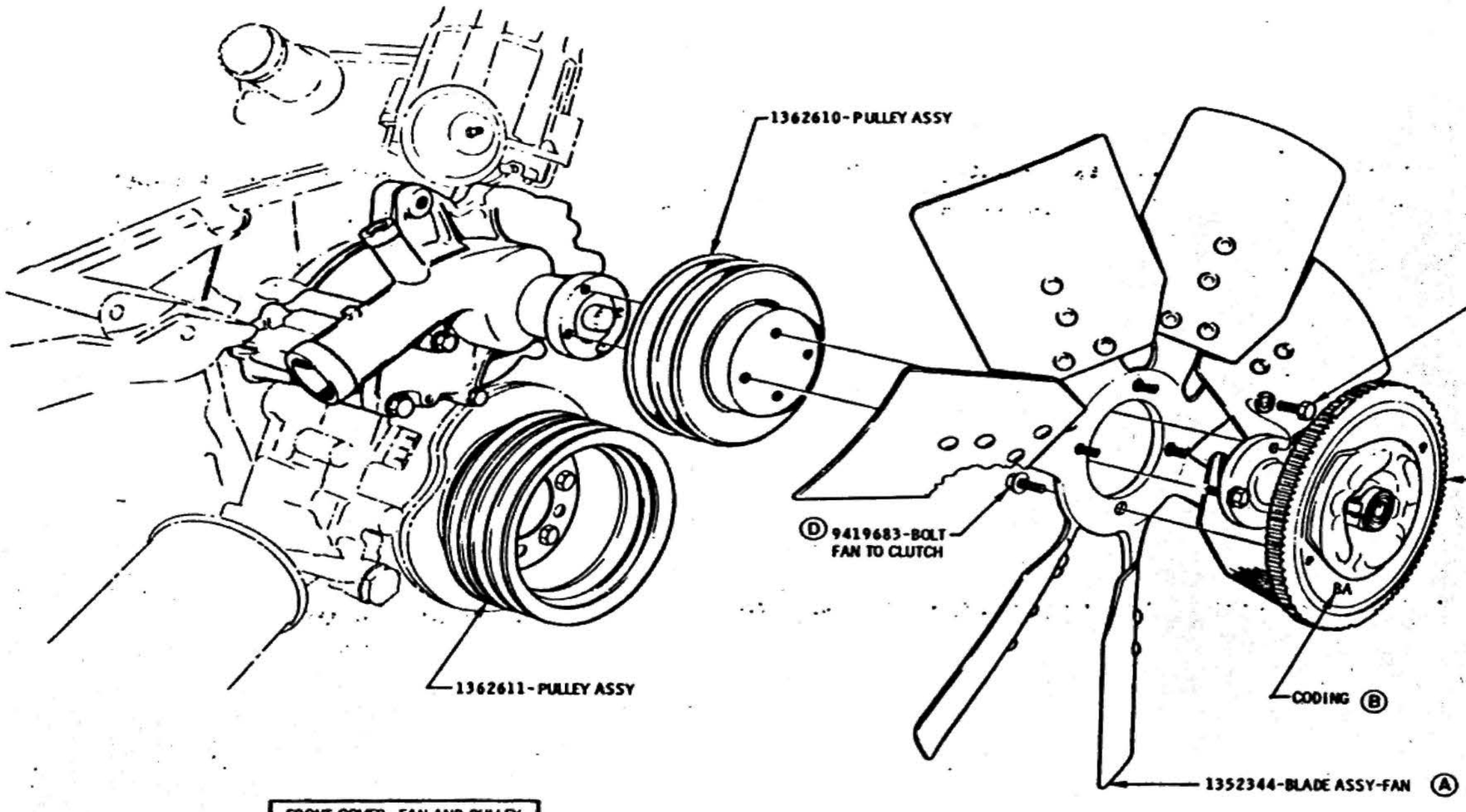

FRONT COVER, FAN AND PULLEY INSTALLATION

FOR CARS WITH V-6 ENGINE

DATE	SYM	REVISION	DR.	CK.	DATE	SYM	REVISION	DR.	CK.	DATE	SYM	REVISION	DR.	CK.
										10-16-64	D	WAS 9418829 BOLT	CG	VP
										6-3-64	C	L. WASHER ADDED	CG	VP
										5-26-64	B	CODING ADDED	CG	VP
										2-27-64	A	WAS 360026 FAN ASSY	CG	VP

INSTALLATION — AIR CONDITIONING

DATE DECEMBER 27, 1963
DR. BY KESTER
CHECKED H. VAN PELT
APPR.
APPR.

FIRST USED 1965 — Oldsmobile Graphic Illustration — PAGE 35C60-2.12

SERIES F-85 — REF. 35C60 — PART NO. 386023

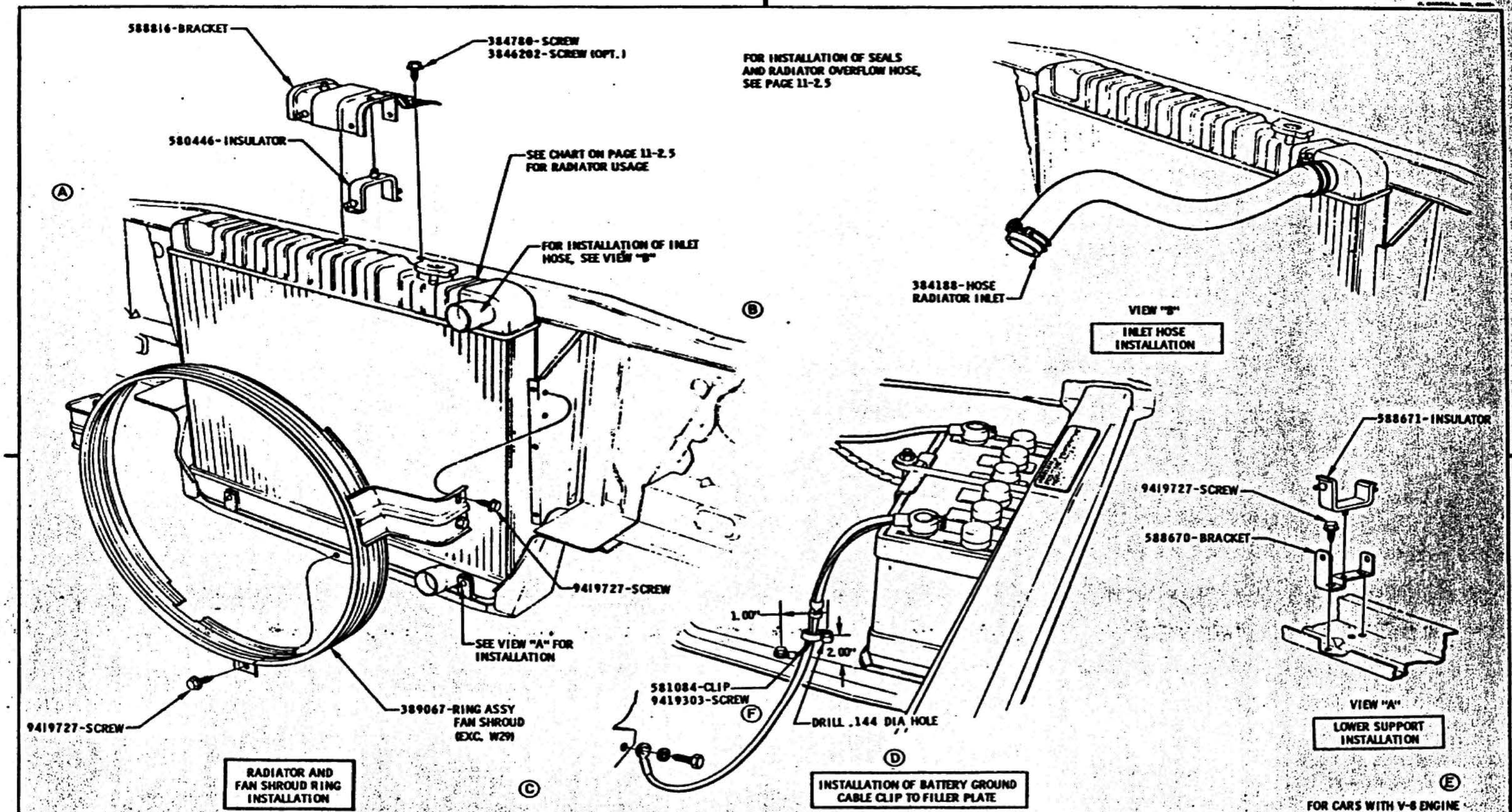

DATE	SYM	REVISION	DR.	CK.	DATE	SYM	REVISION	DR.	CK.	DATE	SYM	REVISION	DR.	CK.
										8-12-64	E	NOTE ADDED	BA	DT
										8-4-64	D	VIEW ADDED	OM	BP
										6-26-64	C	REDRAWN & REVISED	MB	WD
										5-4-64	B	NOTE ADDED	BA	VP
					12-8-64	F	"EXC W29" REMOVED	HLEWP		5-4-64	A	MOD. PART NO. REMOVED	BA	VP

INSTALLATION — AIR CONDITIONING

DATE DECEMBER 27, 1963
DR. BY KESTER
CHECKED H. VAN PELT
APPR.
APPR.

FIRST USED 1965

Oldsmobile GRAPHIC ILLUSTRATION

SERIES F-85

REF. 35C60

PAGE 35C60-2.13

PART NO. 386023

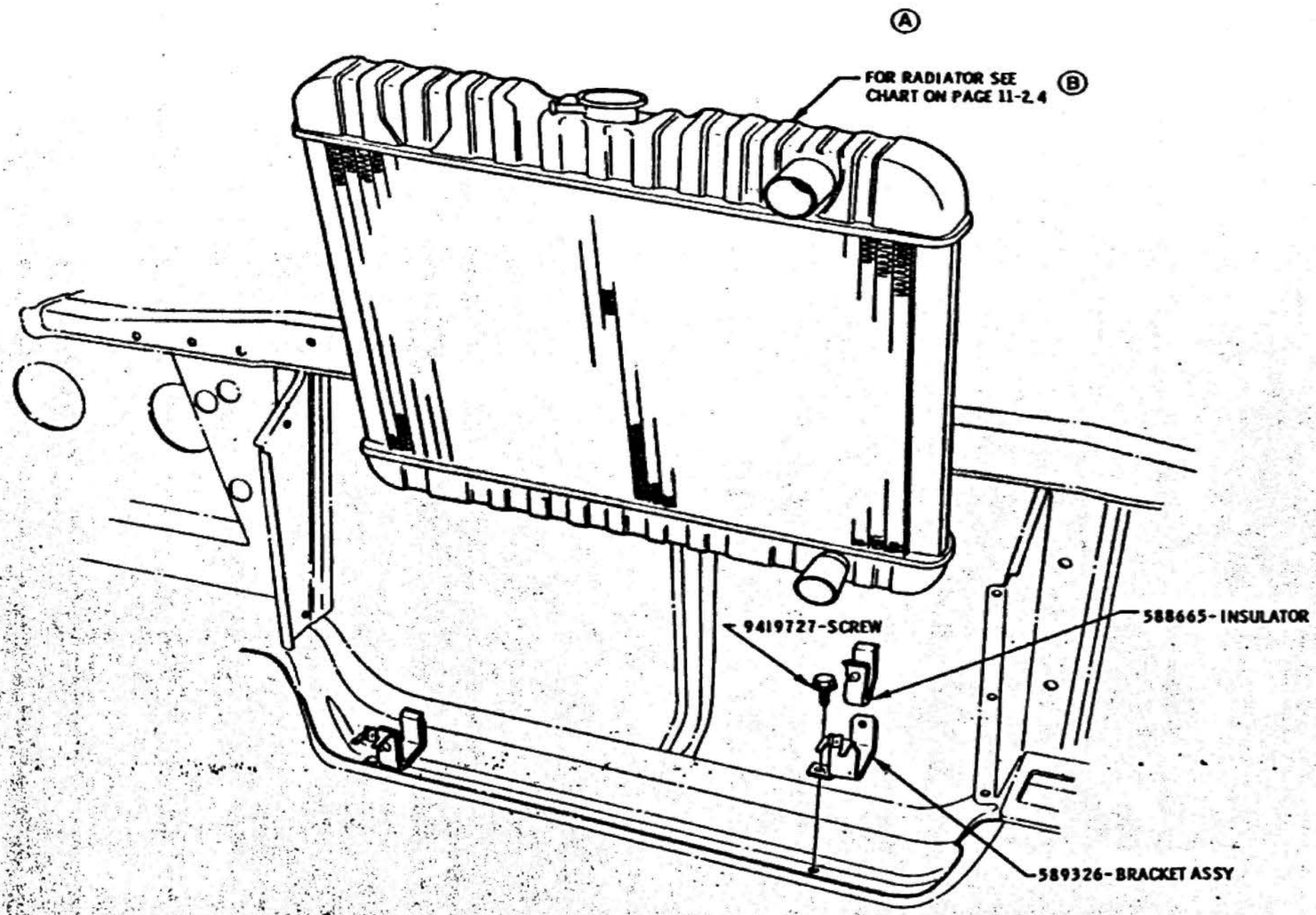

INSTALLATION OF RADIATOR AND LOWER MOUNTING BRACKETS

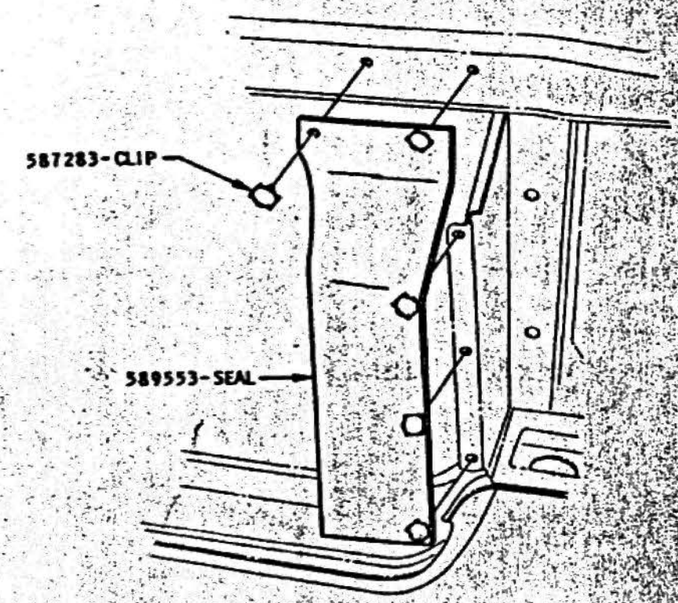

INSTALLATION OF R.H. SEAL (L.H. OPPOSITE)

FOR CARS WITH V-6 ENGINE

DATE	SYM	REVISION	DR.	CK.	DATE	SYM	REVISION	DR.	CK.	DATE	SYM	REVISION	DR.	CK.
										5-4-64	B	NOTE ADDED		VP
										5-4-64	A	BAD. PART NO. REMOVED		VP

INSTALLATION: AIR CONDITIONING

DATE DECEMBER 27, 1963 | DR. BY KESTER | CHECKED H. VAN PELT | APPR. | APPR.

FIRST USED 1965 | Oldsmobile GRAPHIC ILLUSTRATION | GENERAL F-85 | REF. 35C60

PAGE 35C60-2.14

PART NO. 386023

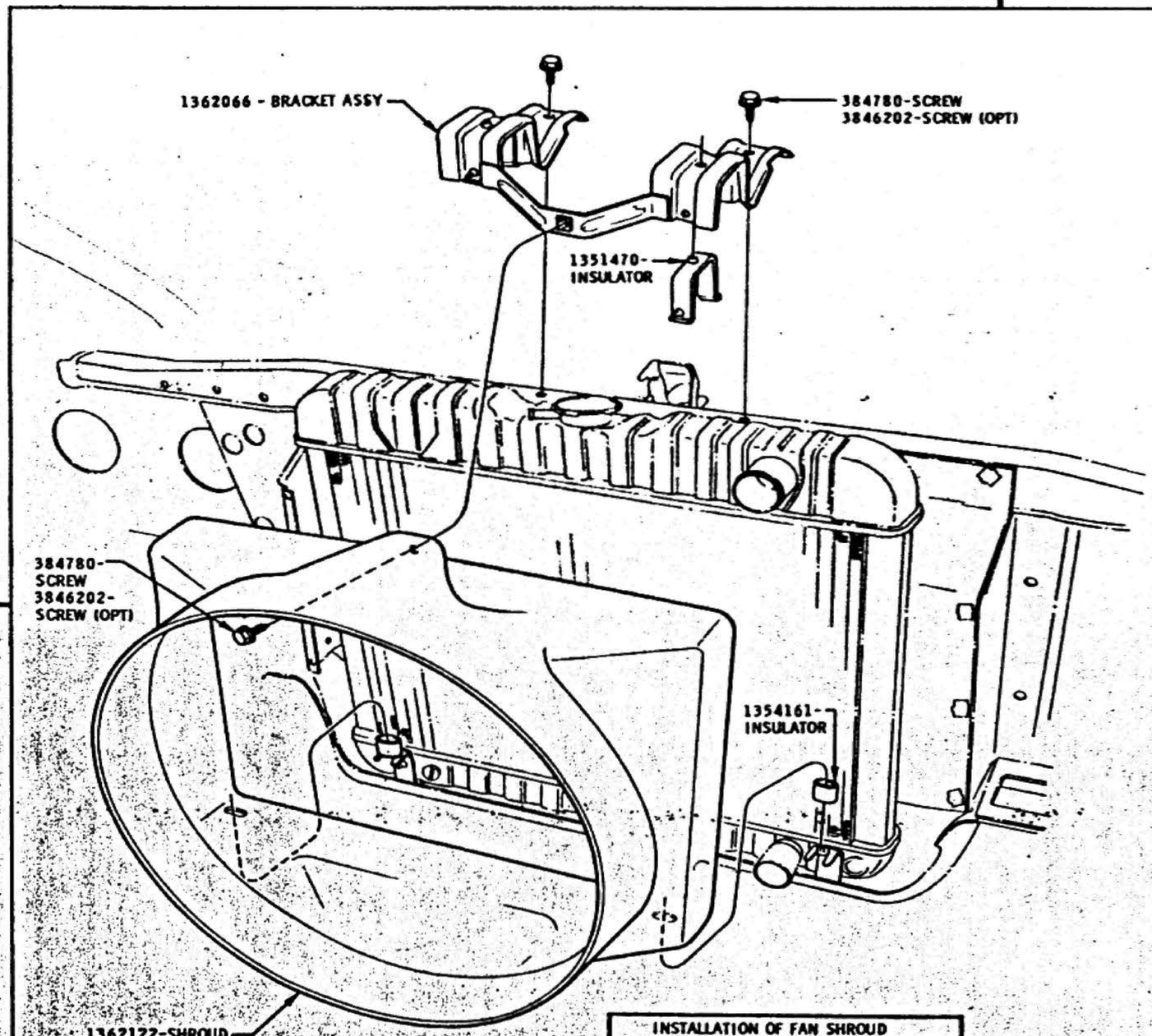

INSTALLATION OF FAN SHROUD AND RADIATOR UPPER MOUNTING BRACKET

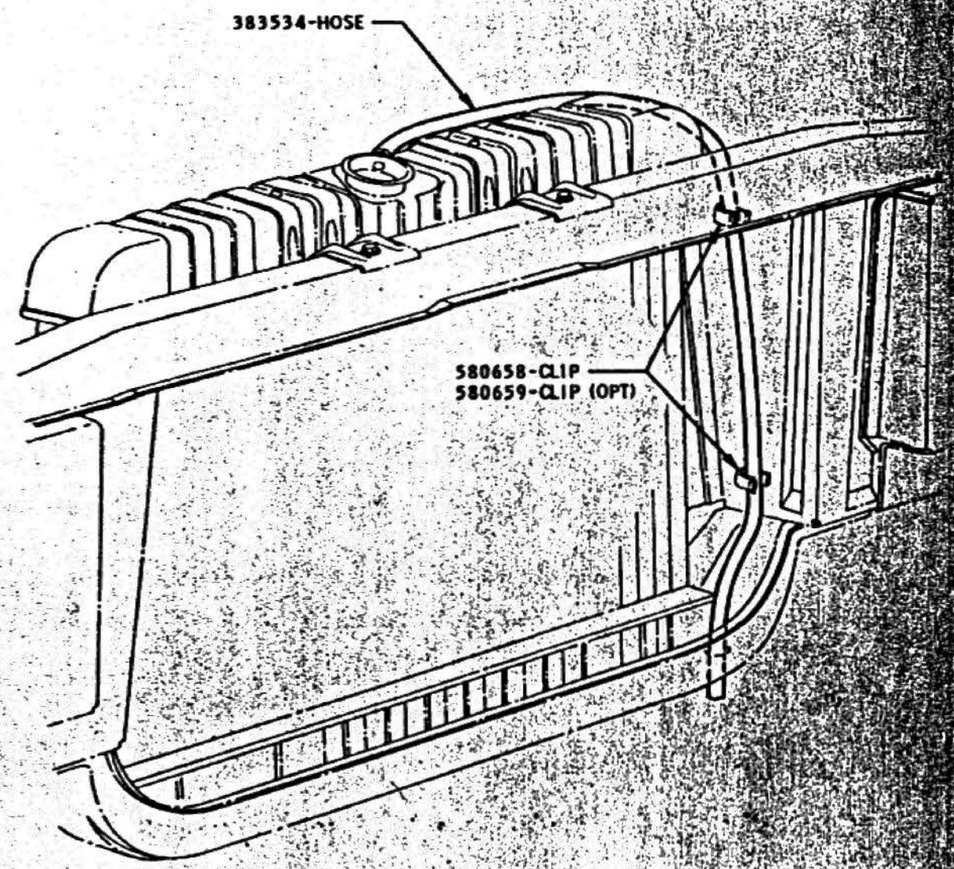

INSTALLATION OF RADIATOR OVERFLOW HOSE

FOR CARS WITH V-6 ENGINE

DATE	SYM	REVISION	DR.	CK.	DATE	SYM	REVISION	DR.	CK.	DATE	SYM	REVISION	DR.	CK.

INSTALLATION — AIR CONDITIONING

DATE DECEMBER 27, 1963
DR. BY KESTER
CHECKED H. VAN PELT
APPR.
APPR.

FIRST USED 1965 — Oldsmobile GRAPHIC ILLUSTRATION — PAGE 35C60-2.15

SERIES F-85 — REF. 35C60 — PART NO. 386023

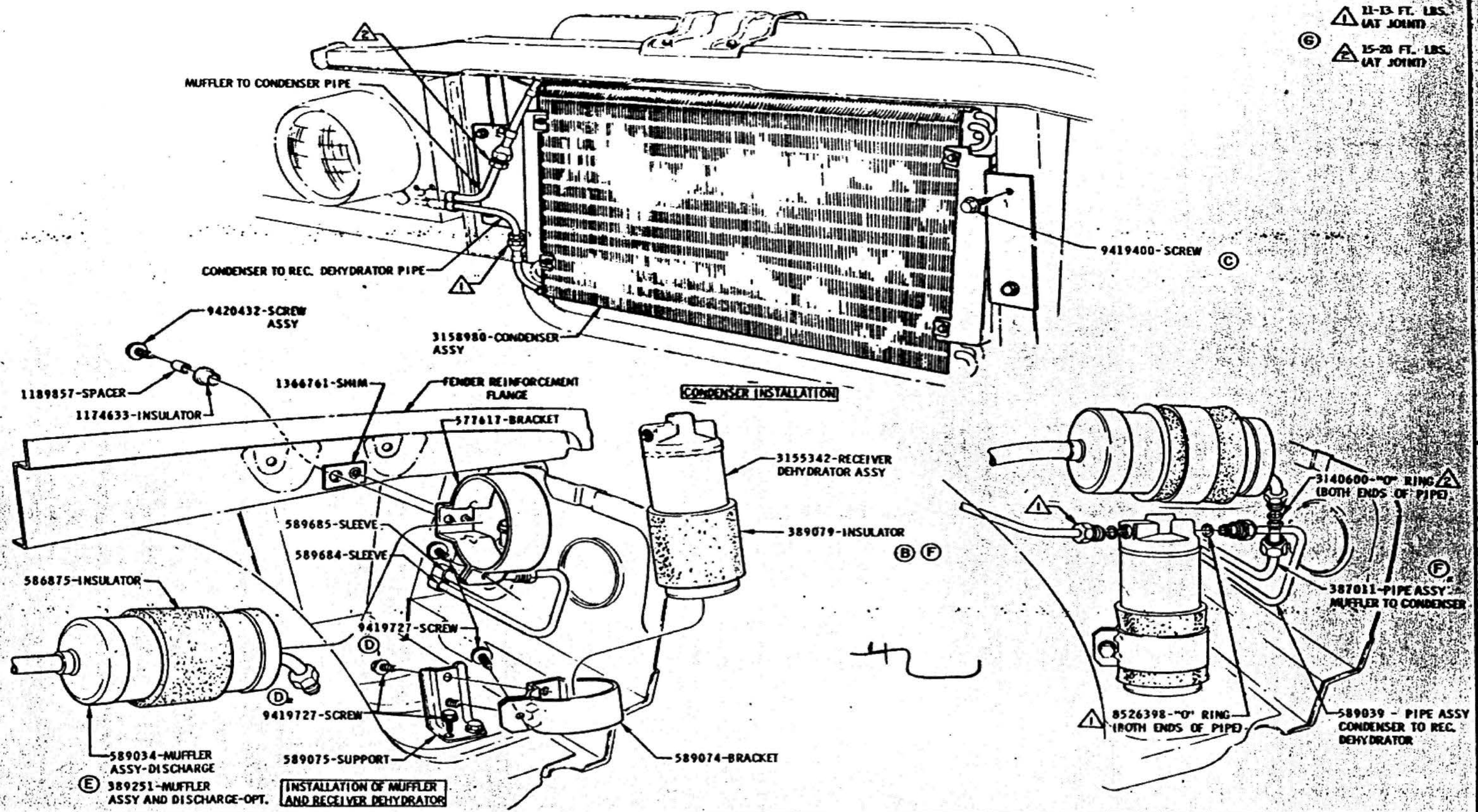

DATE	SYM	REVISION	DR.	CK.	DATE	SYM	REVISION	DR.	CK.	DATE	SYM	REVISION	DR.	CK.
										6-5-64	F	389251-MUFFLER ASSY ADDED	BP	VP
										4-11-64	D	WAS 1363920-SCREW	BP	VP
										4-4-64	C	FASTENINGS REVISED	CB	VP
					7-14-64	G	TORQUES ADDED	WH	VP	2-25-64	B	WAS 506833 INSULATOR	CB	VP
					6-5-64	F	PART NO'S. REVISED	CB	VP	12-28-63	A	1965 WAS 1964	DP	VP

INSTALLATION — AIR CONDITIONING

DATE DECEMBER 27, 1963
DR. BY KESTER
CHECKED H. VAN PELT
APPR.
APPR.

FIRST USED 1965
Oldsmobile Graphic ILLUSTRATION
SERIES F-85
REF. 35C60
PAGE 35C60-2.16
PART NO. 386023

OLDSMOBILE DIVISION GENERAL MOTORS CORPORATION LANSING 21, MICHIGAN

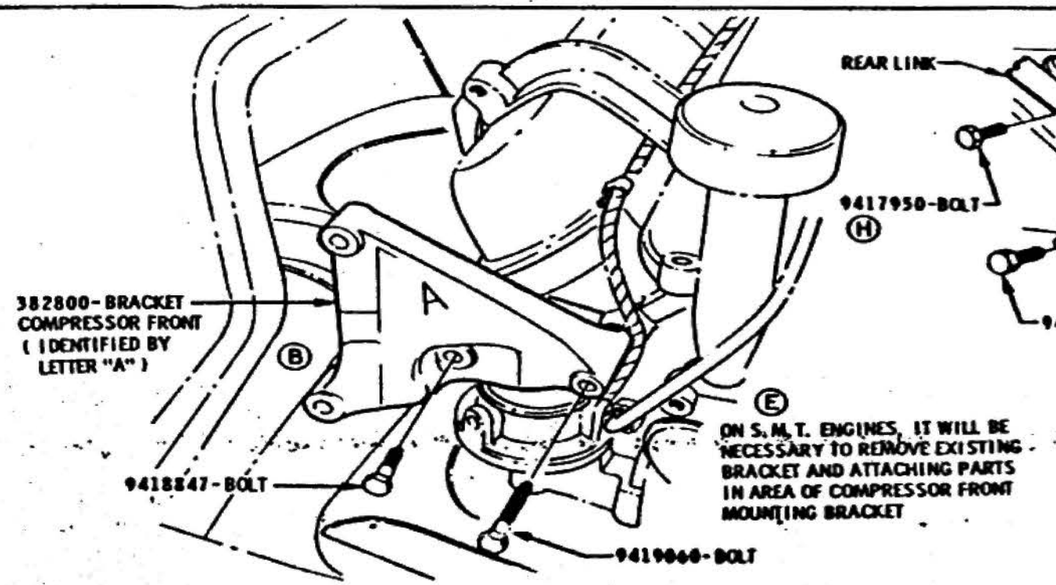

FRONT BRACKET TO ENGINE

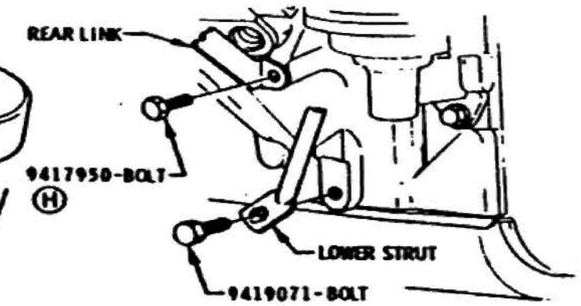

VIEW "A"

VIEW IN DIRECTION OF ARROW

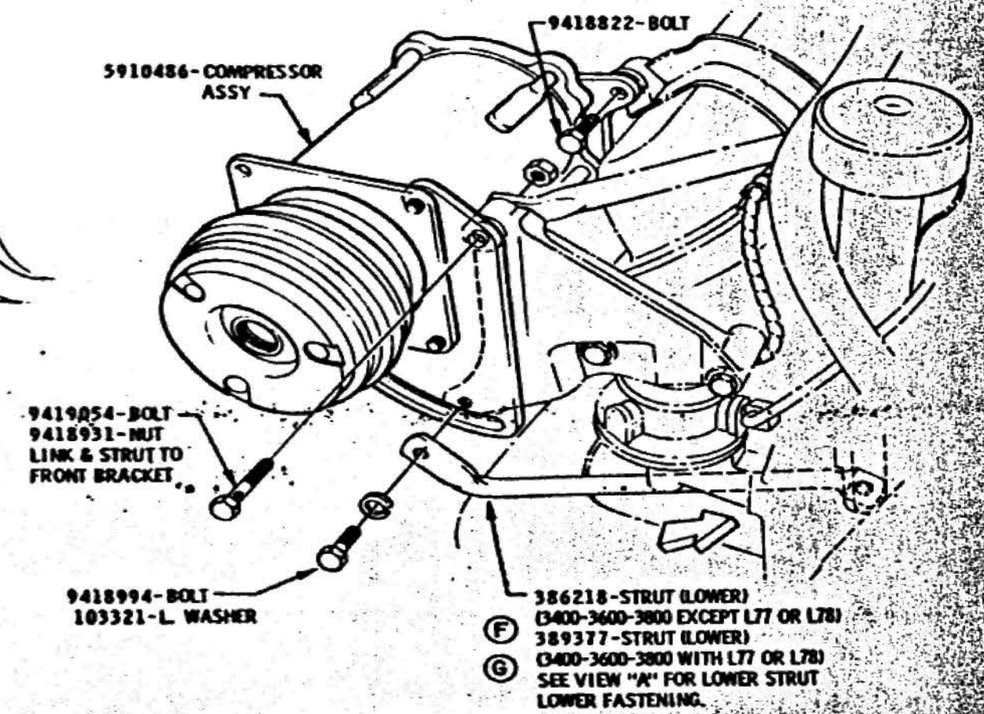

COMPRESSOR TO FRONT BRACKET

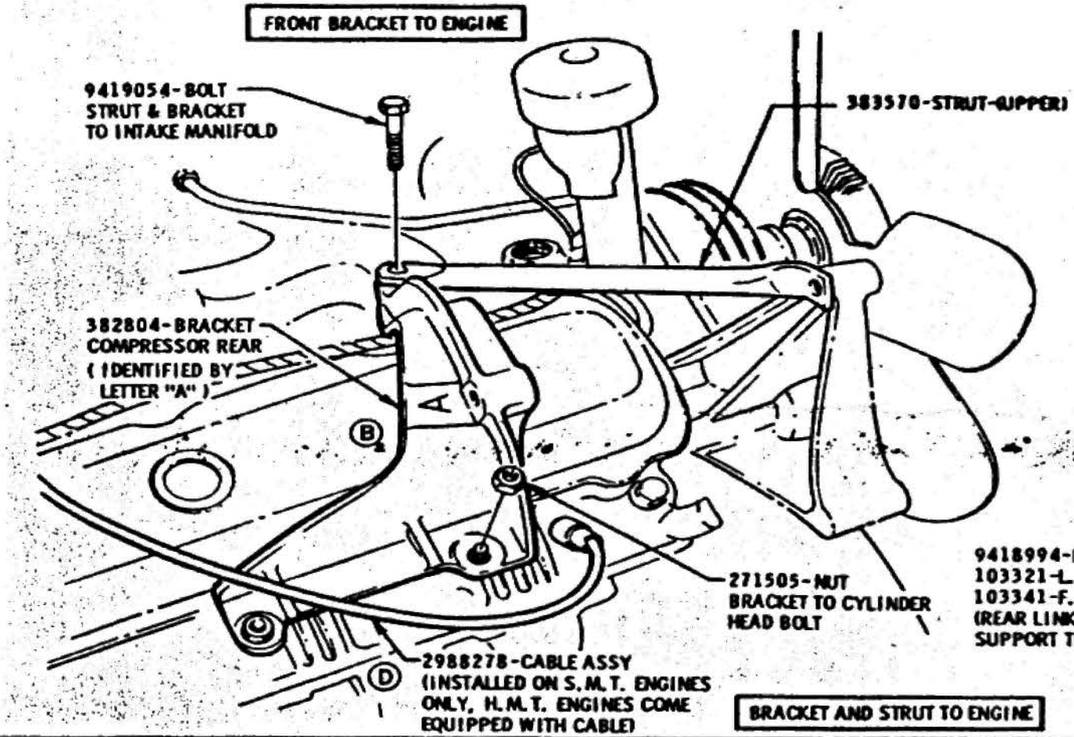

BRACKET AND STRUT TO ENGINE

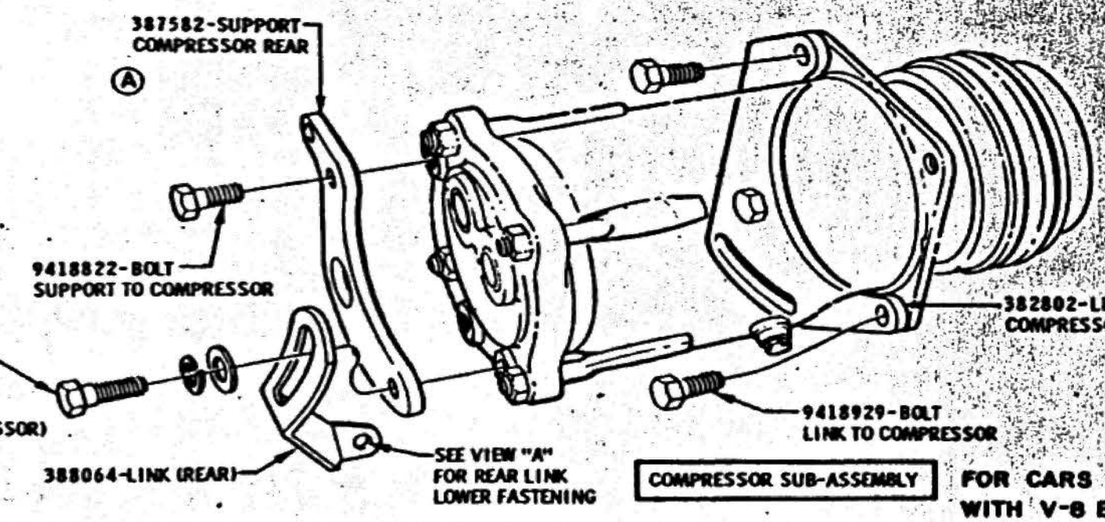

COMPRESSOR SUB-ASSEMBLY

FOR CARS WITH V-8 ENGINE

DATE	SYM	REVISION	DR.	CK.	DATE	SYM	REVISION	DR.	CK.	DATE	SYM	REVISION	DR.	CK.
										4-16-64	E	NOTE ADDED	NG	VP
										4-16-64	D	WAS 2986309-CABLE	NG	VP
					REVISION	H	WAS 1798815-BOLT	RC	JP	3-24-64	C	REV. TO DETAIL & PARTS LIST		VP
					8-27-64	G	STRUT REVISED TO PATRN		VP	3-17-64	B	IDENTIFICATION ADDED		VP
					6-12-64	F	389377-STRUT INFO. ADDED		VP	3-9-64	A	WAS 382806 SUPPORT		VP

INSTALLATION — AIR CONDITIONING

DATE DECEMBER 27, 1963 — DR. BY K. ESTES — CHECKED H. VAN PELT — APPR. — APPR.

FIRST USED 1965 — Oldsmobile Service ILLUSTRATION — DWG. 35C60-2.17

SERIES F-85 — REF. 35C60 — PART NO. 386023

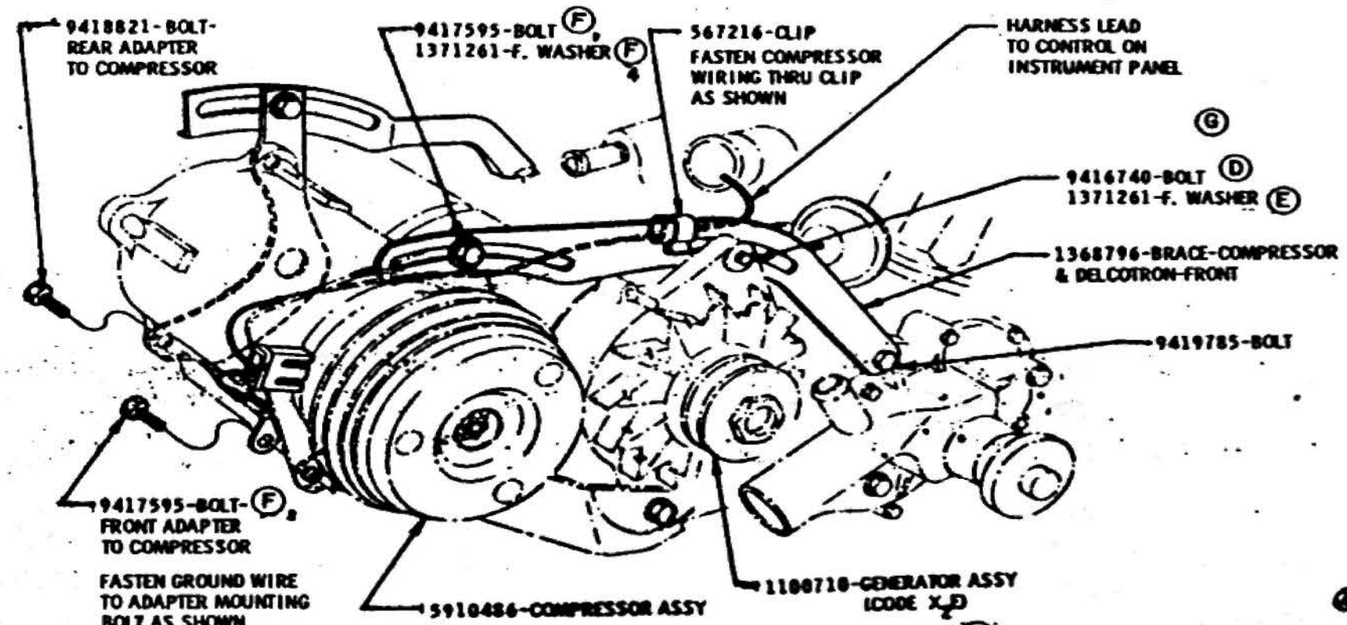

COMPRESSOR AND GENERATOR MOUNTING

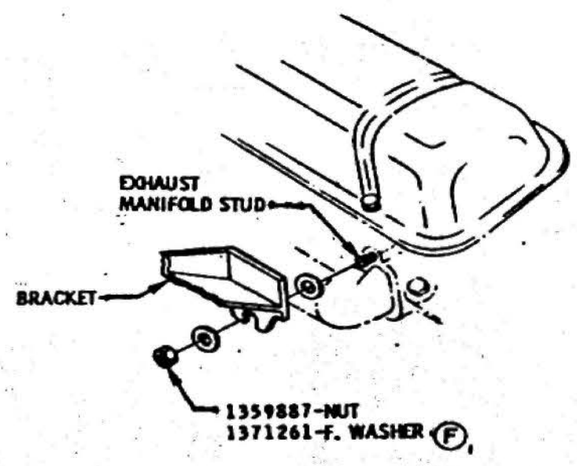

BRACKET REAR FASTENING TO EXHAUST MANIFOLD

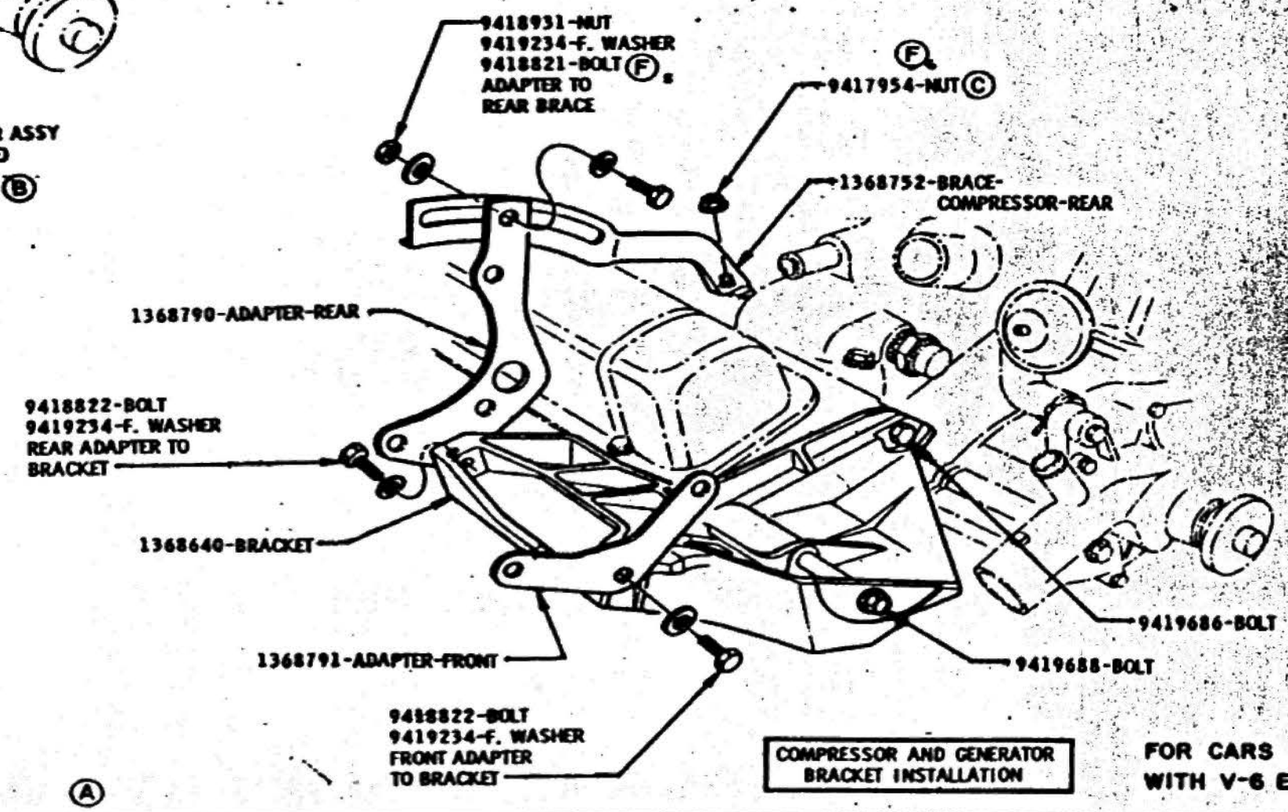

COMPRESSOR AND GENERATOR BRACKET INSTALLATION

FOR CARS WITH V-6 ENGINE

DATE	SYM	REVISION	DR.	CK.	DATE	SYM	REVISION	DR.	CK.	DATE	SYM	REVISION	DR.	CK.
										8-18-64	E	WAS 9419725 F. WASHER	BP	VP
										8-18-64	D	WAS 9418991-BOLT	BP	VP
										7-31-64	C	1359887 NUT ADDED	BP	VP
					1-22-65	G	IDLE SPEED LEAD REMOVED	BP	VP	7-10-64	B	GEN. CODE ADDED	BP	VP
					10-16-64	F	PART NUMBERS REVISED	CC	VP	5-24-64	A	REVISED TO DETAIL	JR	VP

INSTALLATION — AIR CONDITIONING

DATE DECEMBER 27, 1963
DR. BY KESTER
CHECKED H. VAN PELT
APPR.
APPR.

FIRST USED 1965 — Oldsmobile Graphic ILLUSTRATION

MODEL F-85 — REF. 35C60

PAGE 35C60-2.18

PART NO. 386023

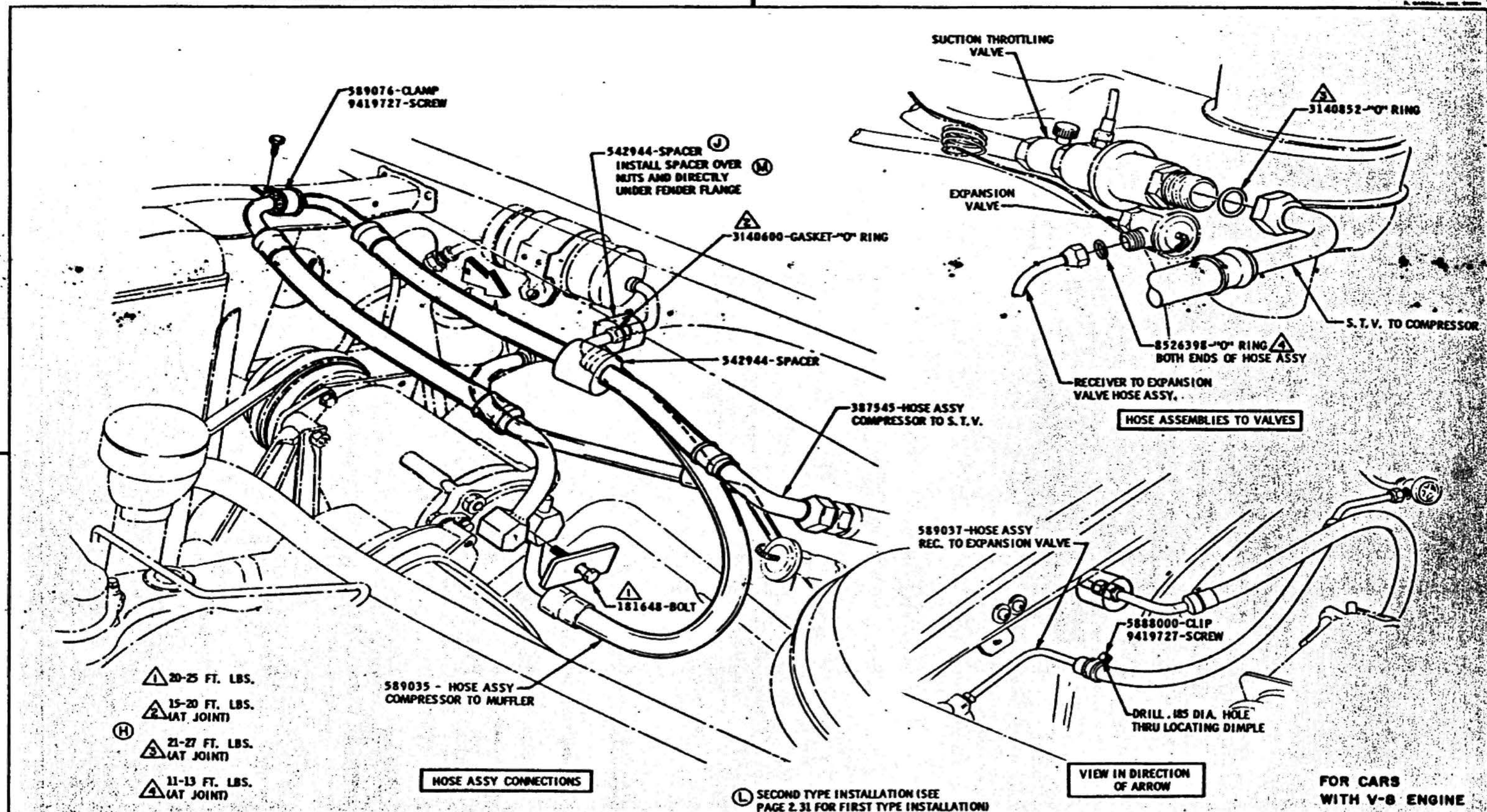

DATE	SYM	REVISION	DR.	CK.	DATE	SYM	REVISION	DR.	CK.	DATE	SYM	REVISION	DR.	CK.
					9-24-64	K	1st TYPE REMVD. 2nd TYPE ADD	NG	VD	4-22-64	E	REVISED TO PARTS LIST		
					7-31-64	J	WAS 540067 SPACER	DT	VD	4-11-64	D	WAS 542944-SPACER		VD
					7-14-64	H	TORQUES ADDED	MW	BJ	4-11-64	C	WAS 1363920-SCREW		VD
12-8-64	M	1195010-CLAMP REMV'D	BJ	VD	6-12-64	G	540067 SPACER ADDED	BP	VD	1-30-64	B	WAS 589036-HOSE ASSY		VD
11-9-64	L	WAS PAGE 2.32	JC	VD	6-3-64	F	WAS 3140748 "O" RING		VD	1-23-64	A	PART NO. ADDED		VD

INSTALLATION — AIR CONDITIONING

DATE DECEMBER 27, 1965 — FIRST USED 1965 — Oldsmobile Service ILLUSTRATION — PAGE 35C60-2.19

DR. BY K. ESTER — CHECKED K. VAN PELT — APPR. — APPR.

SHEET F-85 — REV. 35C60 — PART NO. 386023

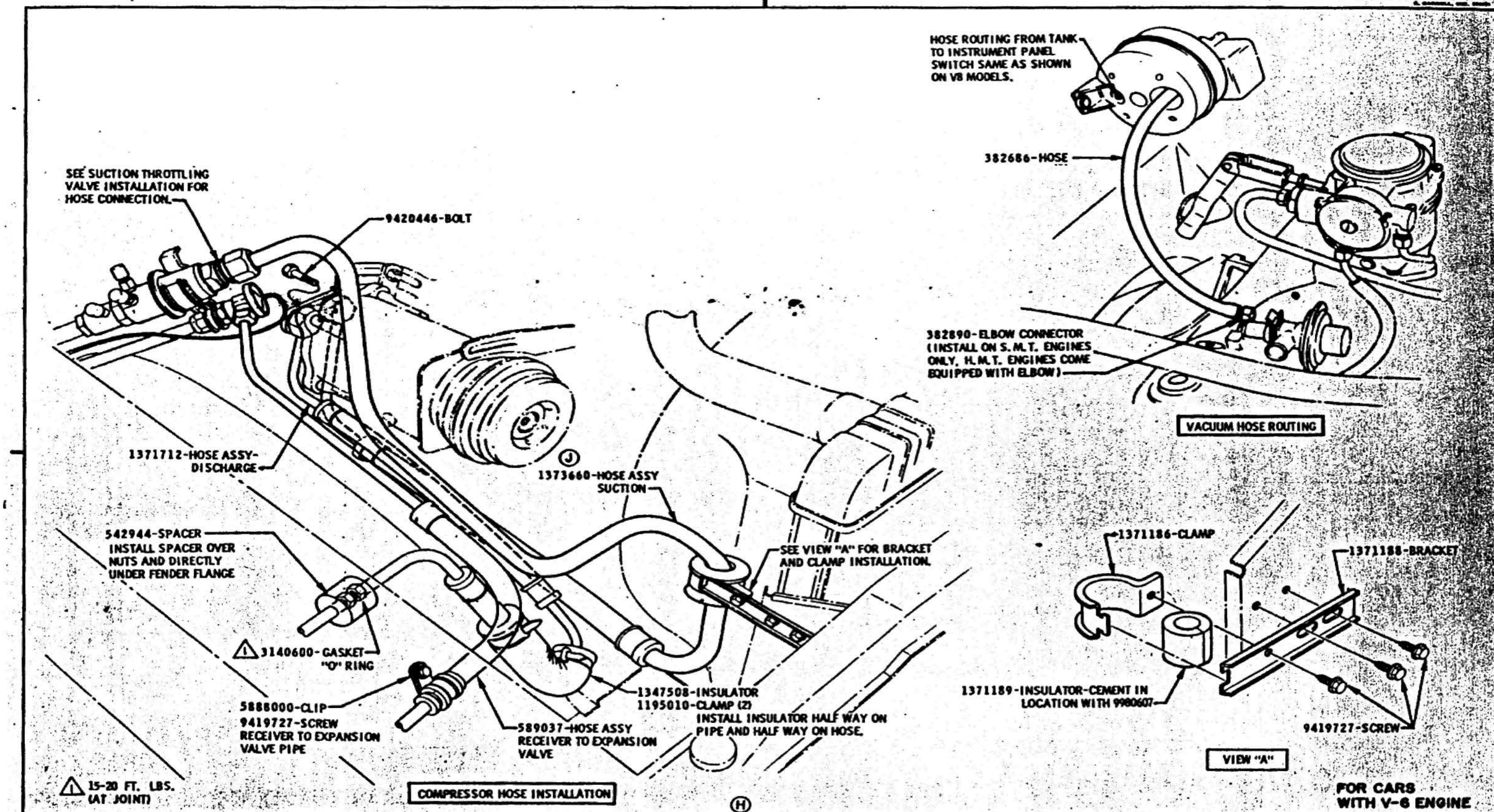

DATE	SYM	REVISION	DR.	CK.	DATE	SYM	REVISION	DR.	CK.	DATE	SYM	REVISION	DR.	CK.
										12-14-64	K	1195010-CLAMP REMOVED		VP
										12-14-64	J	WAS 1371245-HOSE ASSY		VP
										7-31-64	H	REVISED & REDRAWN		VP

INSTALLATION — AIR CONDITIONING

DATE DECEMBER 27, 1963
DR. BY B. GOODMAN
CHECKED H. VAN PELT
APPR.
APPR.

FIRST USED 1965

Oldsmobile Service ILLUSTRATION

DIVISION F-85

REF. 35C60

FIGURE 35C60-2.20

PART NO. 386023

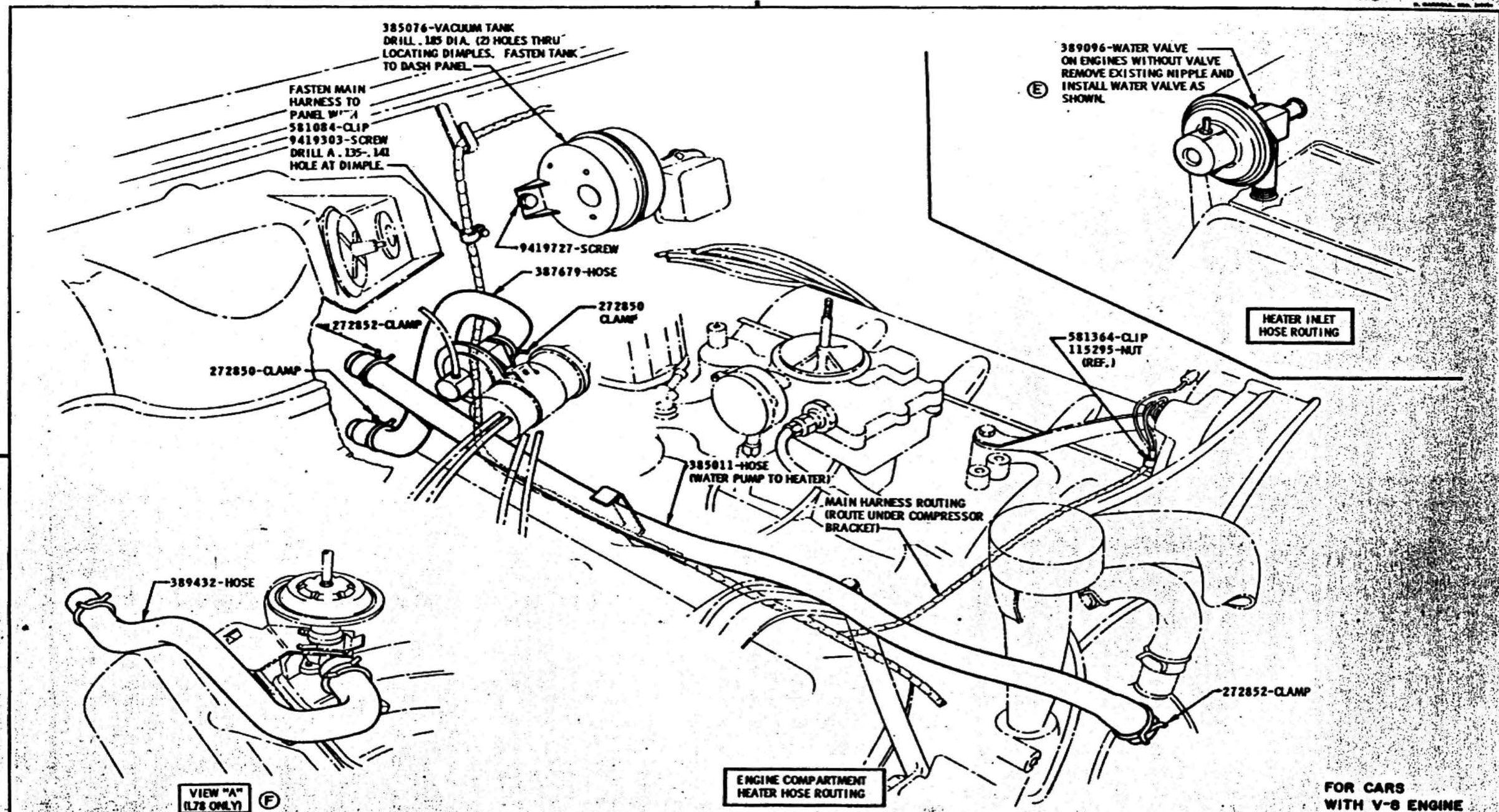

DATE	SYM	REVISION	DR.	CK.	DATE	SYM	REVISION	DR.	CK.	DATE	SYM	REVISION	DR.	CK.
										7-28-64	E	NOTE REVISED	B.A.	VP
										6-2-64	D	WAS 589033 WATER VALVE	B.A.	VP
										4-22-64	C	REVISED & REDRAWN	B.A.	VP
										4-16-64	B	NOTE ADDED	A.B.	VP
					11-13-64	F	VIEW "A" ADDED	B.A.	VP	3-17-64	A	HOSE REVISED TO DETAIL	B.A.	VP

INSTALLATION — AIR CONDITIONING

DATE JANUARY 2, 1964
DR. BY C.V. BEACHAM
CHECKED H. VAN PELT
APPR.
APPR.

FIRST USED 1965
Oldsmobile GENERAL ILLUSTRATION
SERIES F-85
REF. 35C60
FIGURE 35C60-2.21
PART NO. 386023

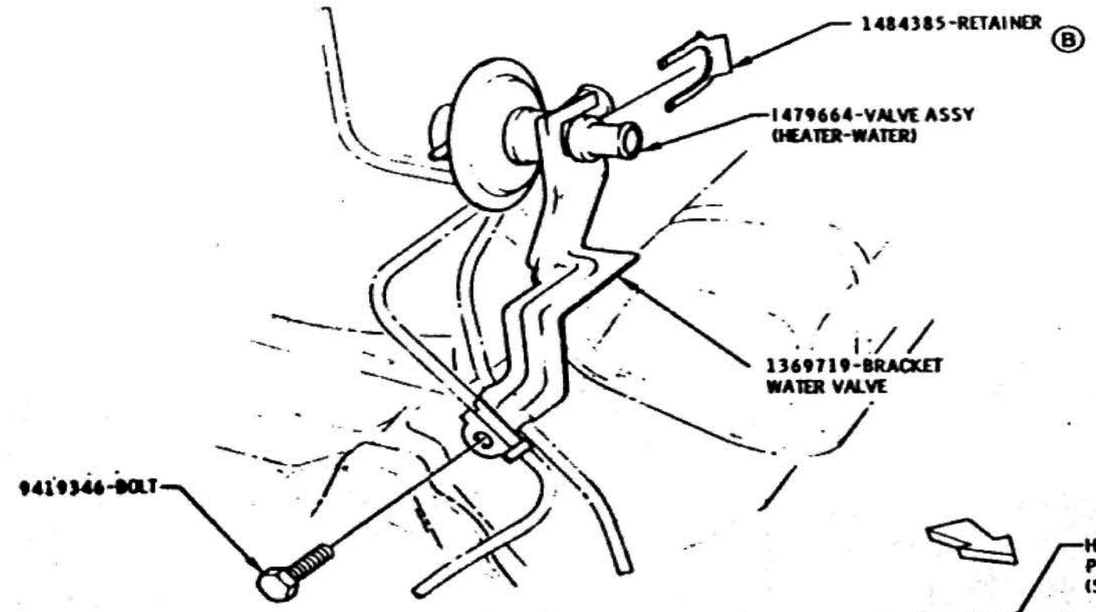

VIEW IN DIRECTION OF ARROW "A"

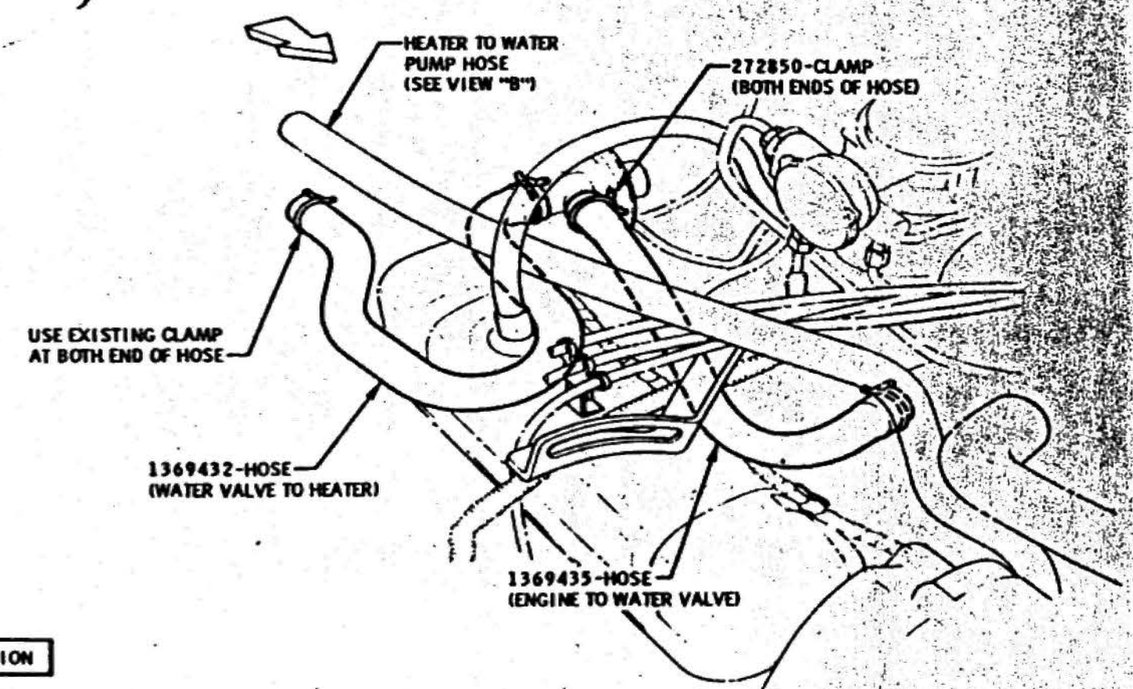

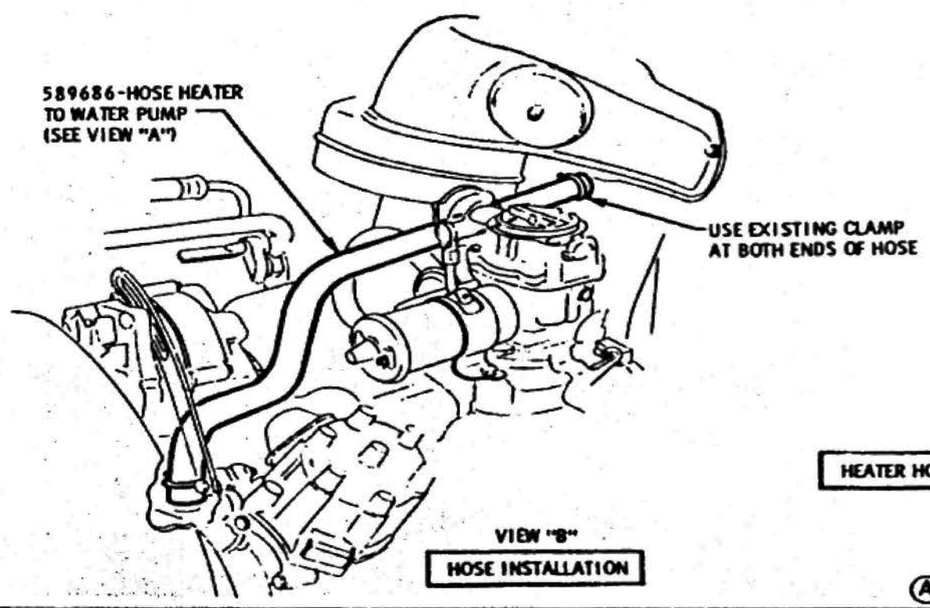

HEATER HOSE INSTALLATION

VIEW "B"
HOSE INSTALLATION

VIEW "A"
INSTALLATION OF HEATER HOSES TO WATER VALVE

FOR CARS WITH V-6 ENGINE

A

DATE	SYM	REVISION	DR.	CK.	DATE	SYM	REVISION	DR.	CK.	DATE	SYM	REVISION	DR.	CK.
										9-24-64	B	WAS 1479565 RETAINER	CB	VD
										9-16-64	A	REDRAWN & REVISED		VD

INSTALLATION	AIR CONDITIONING		
DATE DECEMBER 27, 1963	FIRST USED 1965	Oldsmobile Service ILLUSTRATION	PAGE 35C60-2.22
DR. BY K. ESTER			
CHECKED H. VAN DELT	SERIES F-85	REF. 35C60	PART NO. 386023
APPR.			
APPR.			

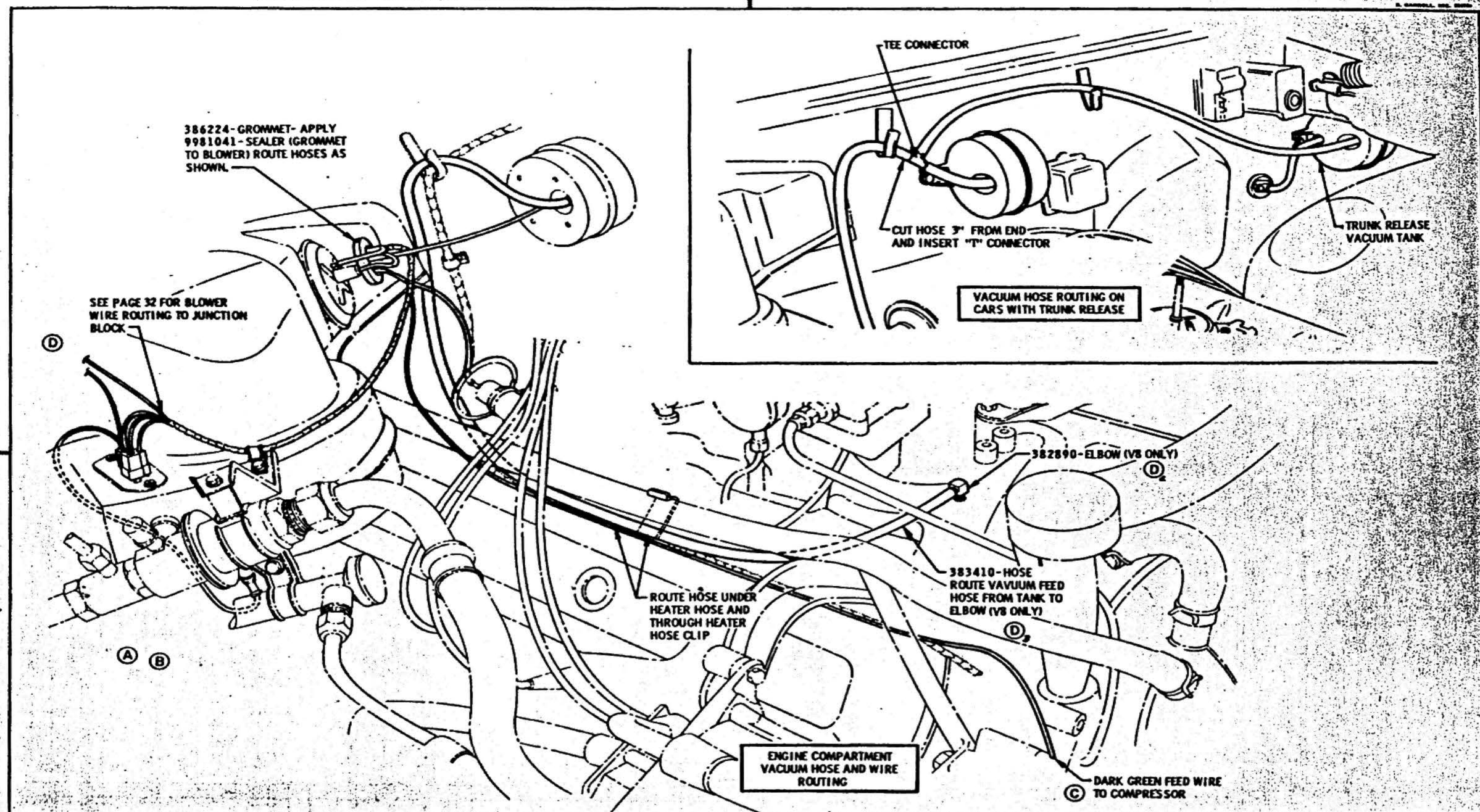

DATE	SYM	REVISION	DR.	CK.	DATE	SYM	REVISION	DR.	CK.	DATE	SYM	REVISION	DR.	CK.
										12-14-64	D	NOTES REVISED		VP
										9-30-64	C	WAS RED WIRE		VP
										9-24-64	B	BACKGROUND REVISED		VP
										4-22-64	A	BACKGROUND REVISED		VP

INSTALLATION — AIR CONDITIONING

DATE JANUARY 2, 1964
DR. BY C.V. BEACHNAU
CHECKED H. VAN PELT
APPR.
APPR.

FIRST USED 1965
SERIES F-85
REF. 35C60
Oldsmobile GRAPHIC ILLUSTRATION
PAGE 35C60-2.23
PART NO. 386023

OLDSMOBILE DIVISION GENERAL MOTORS CORPORATION LANSING 21, MICHIGAN

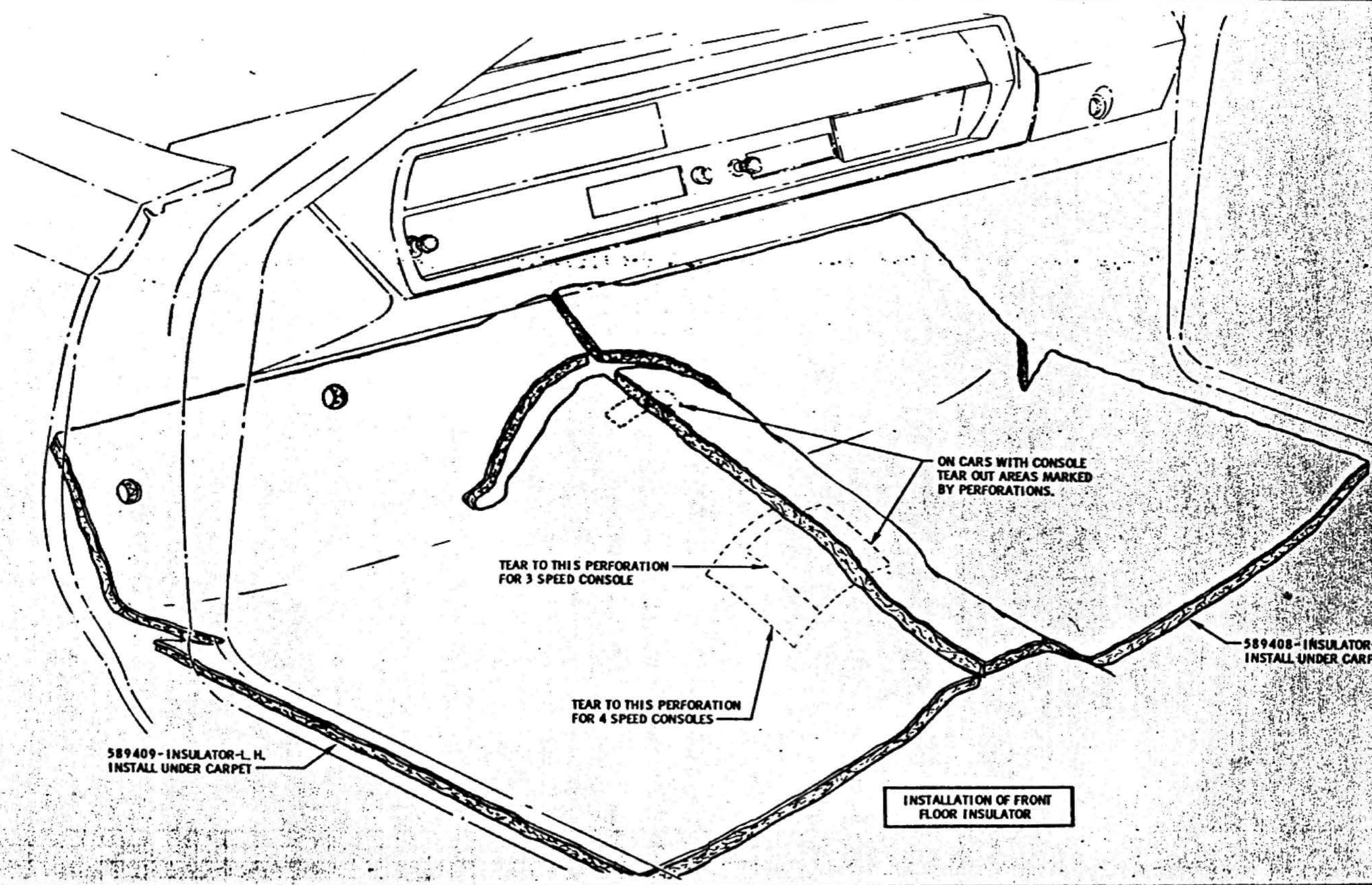

DATE	SYM	REVISION	DR	CK	DATE	SYM	REVISION	DR	CK	DATE	SYM	REVISION	DR	CK

INSTALLATION **AIR CONDITIONING**

DATE JANUARY 2 1964
DR. BY KEISTER
CHECKED H. VAN PELT
APPR.

FIRST USED 1965

Oldsmobile GRAPHIC ILLUSTRATION

SERIES F-85

REF. 35C60

PAGE 35C60-2.24

PART NO. 386023

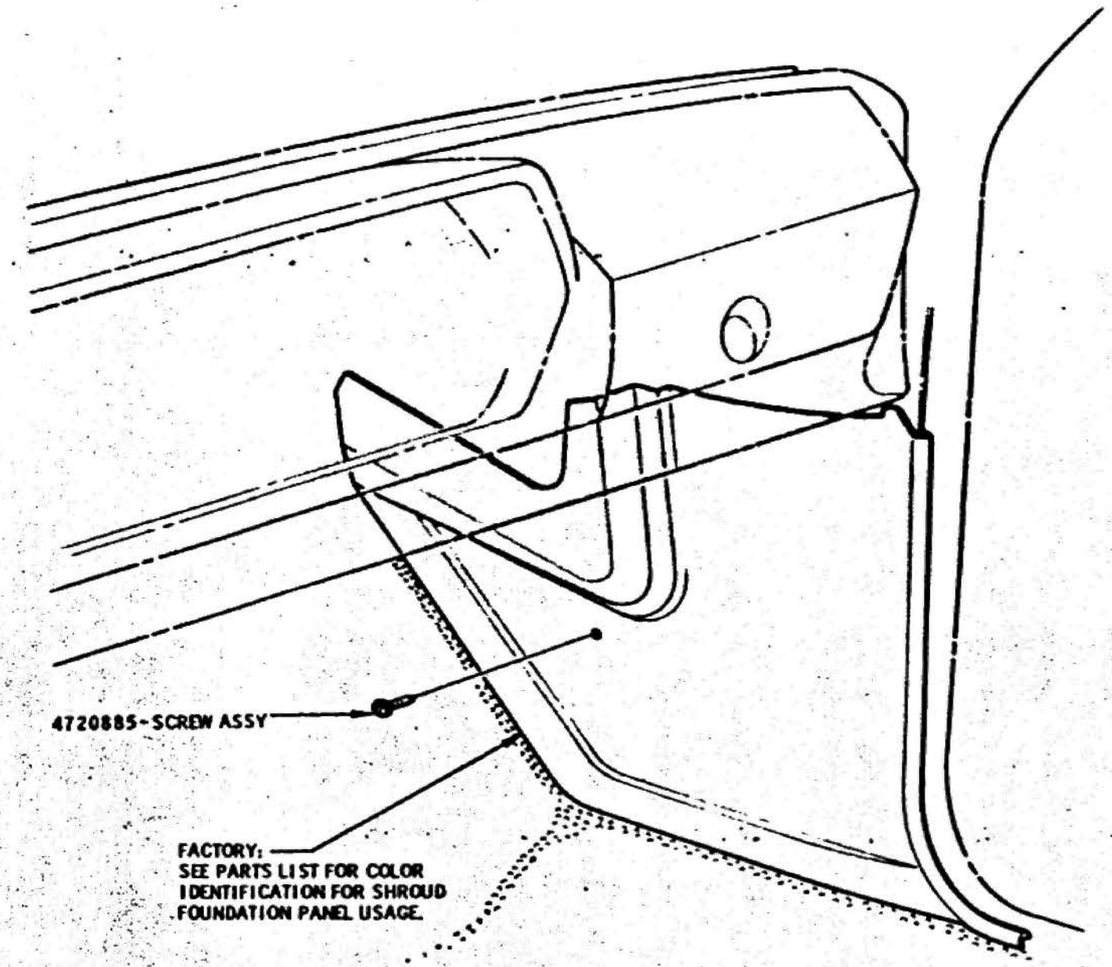

R.H. SHROUD FOUNDATION PANEL INSTALLATION

DATE	SYM	REVISION	DR.	CK.	DATE	SYM	REVISION	DR.	CK.	DATE	SYM	REVISION	DR.	CK.

INSTALLATION — AIR CONDITIONING

DATE DECEMBER 27, 1965
DR. BY KESTER
CHECKED H. VAN PELT
APPR.
APPR.

FIRST USED 1965
Oldsmobile GRAPHIC ILLUSTRATION
SERIES F-85
REF. 35C60
PAGE 35C60-2.25
PART NO. 386023

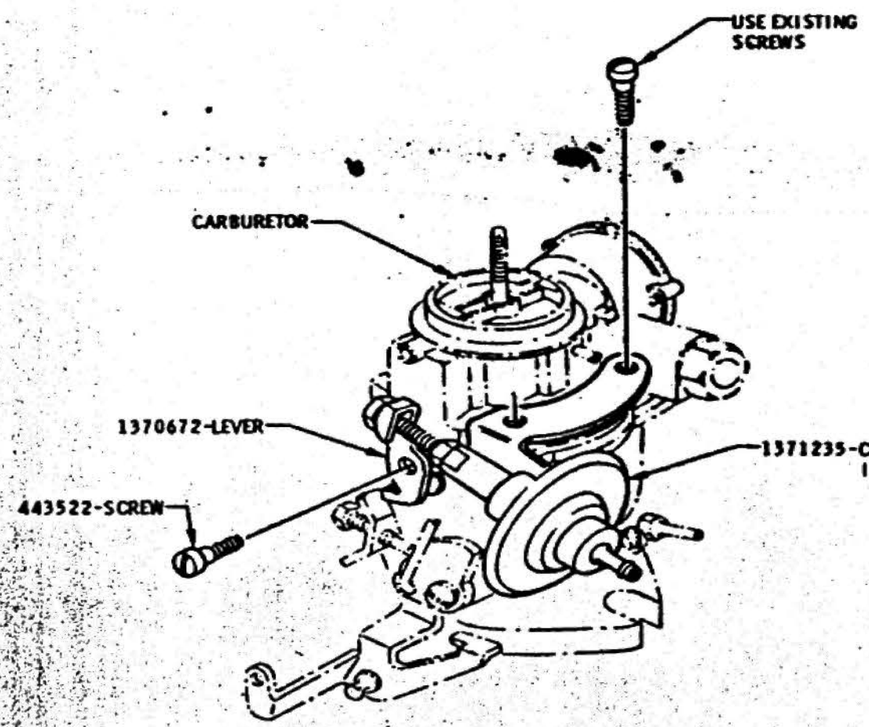

CONTROL INSTALLATION TO CARBURETOR

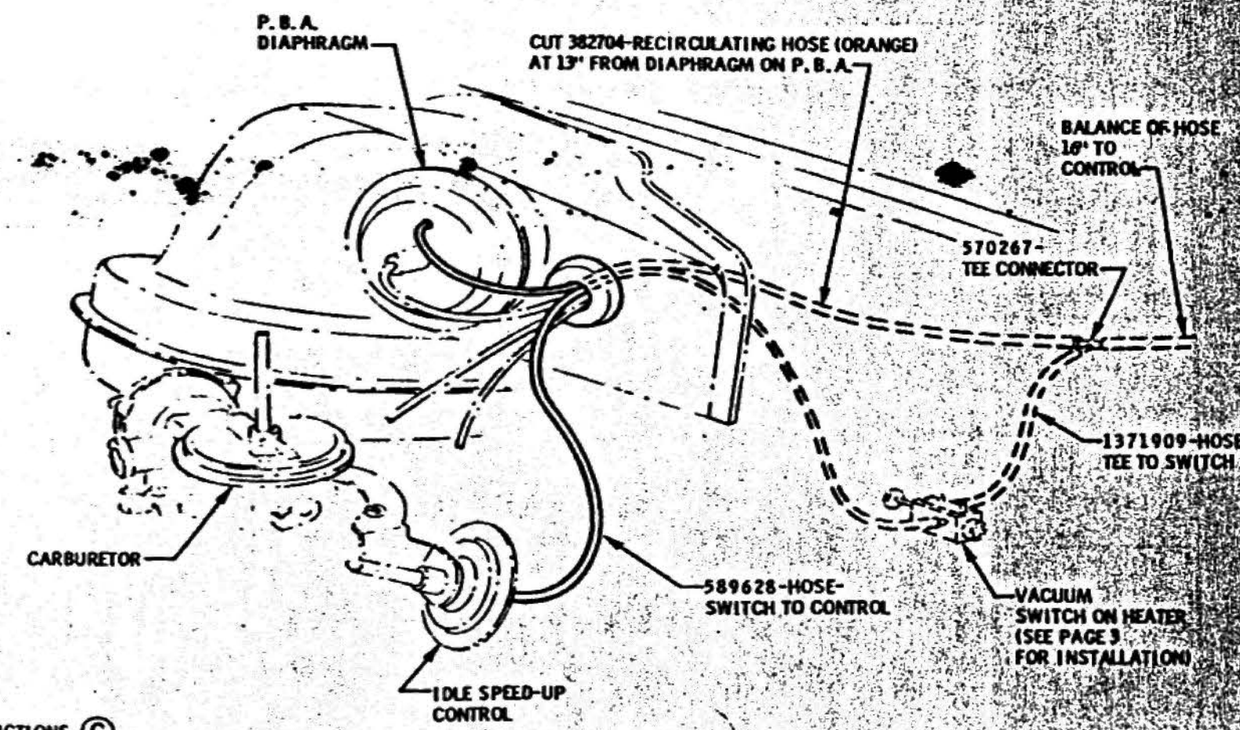

HOSE ROUTING TO VACUUM SWITCH

ADJUSTMENT INSTRUCTIONS (C)

1. AFTER MAKING ALL INSTALLATIONS, START ENGINE AND RUN UNTIL NORMAL OPERATION TEMPERATURE IS REACHED. ADJUST IDLE MIXTURE. ADJUST IDLE SPEED TO 600 R. P. M. IN DRIVE WITH AIR CONDITIONING CONTROL IN OFF POSITION.

2. DISCONNECT TWO-WAY WIRING CONNECTOR FROM COMPRESSOR CLUTCH. TURN AIR CONDITIONING CONTROL TO ON POSITION AND MAKE SURE IDLE SPEED-UP CONTROL IS OPERATING. HOLD IDLE SPEED-UP CONTROL SHAFT (TO PREVENT DAMAGE TO DIAPHRAGM) AND TURN ADJUSTING SCREW AS NECESSARY TO OBTAIN 700 R. P. M. IN DRIVE. (AIR CONDITIONING COMPRESSOR WILL NOT BE ENGAGED).

3. RE-INSTALL TWO-WAY CONNECTOR ON THE COMPRESSOR CLUTCH. (B)

FOR CARS WITH V6 ENGINE

DATE	SYM	REVISION	DR.	CK.	DATE	SYM	REVISION	DR.	CK.	DATE	SYM	REVISION	DR.	CK.
										7-28-64	C	NOTE ADDED	RV	VP
										6-12-64	B	REVISED & REDRAWN	DP	VP

INSTALLATION — AIR CONDITIONING

DATE MAR. 11, 1964
DR. BY G. KESTER
CHECKED H. VAN PELT
APPR.
APPR.

FIRST USED 1965
Oldsmobile GRAPHIC ILLUSTRATION
SERIES F-85
REF. 35C60
PAGE 35C60-2.27
PART NO. 386023

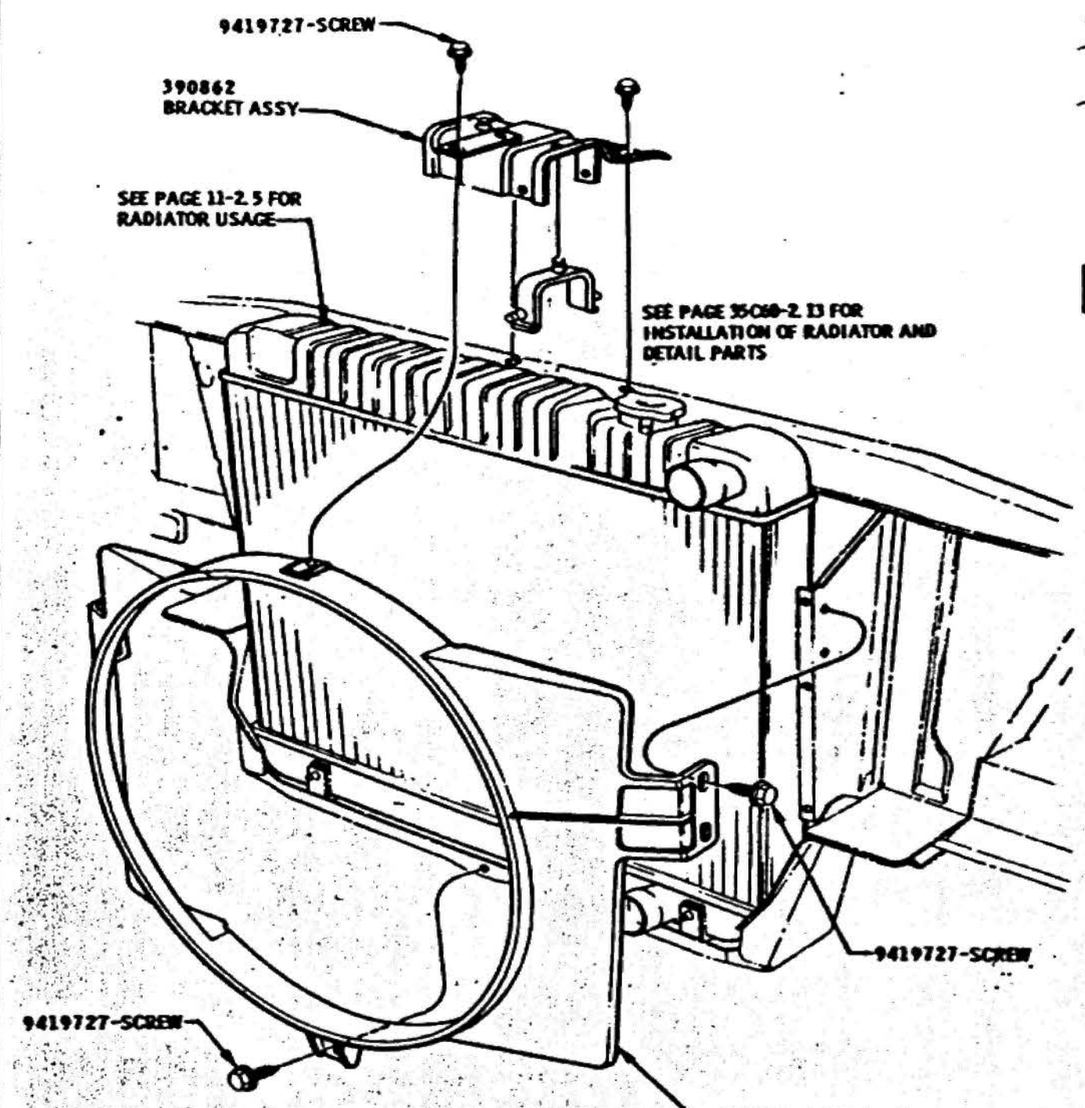

INSTALLATION OF FAN SHROUD

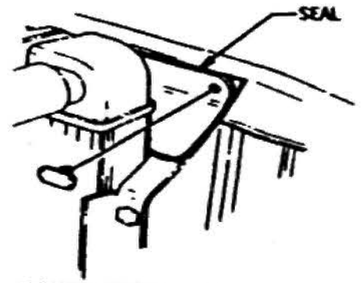

VIEW IN DIRECTION OF ARROW "A"

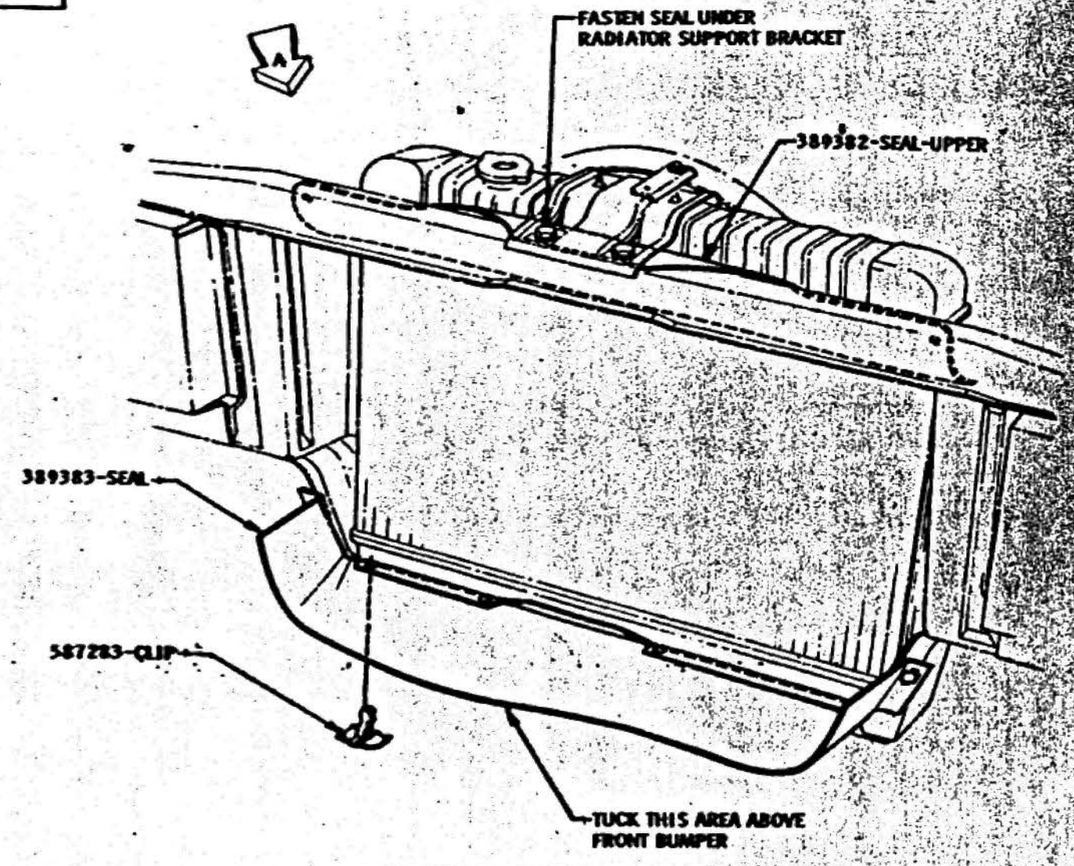

SEAL INSTALLATION

35V82 OPTION

DATE	SYM	REVISION	DR.	CK.	DATE	SYM	REVISION	DR.	CK.	DATE	SYM	REVISION	DR.	CK.
										3-13-64	D	REWORKED & REDRAWN		VP
										10-23-63	C	WAS 1479565 PRT.	JC	VP
										9-24-63	B	VIEWS REMOVED		VP
										7-2-63	A	REWORKED & REDRAWN		VP

INSTALLATION AIR CONDITIONING

DATE JUNE 9, 1963
DR. BY JOSEPH V. GALL
CHECKED H. VAN PELT
APPR.
APPR.

FIRST USED 1965

Oldsmobile Service ILLUSTRATION

PAGE 35C60-2.28

F-85 | 35 C 60 | PART NO. 386023

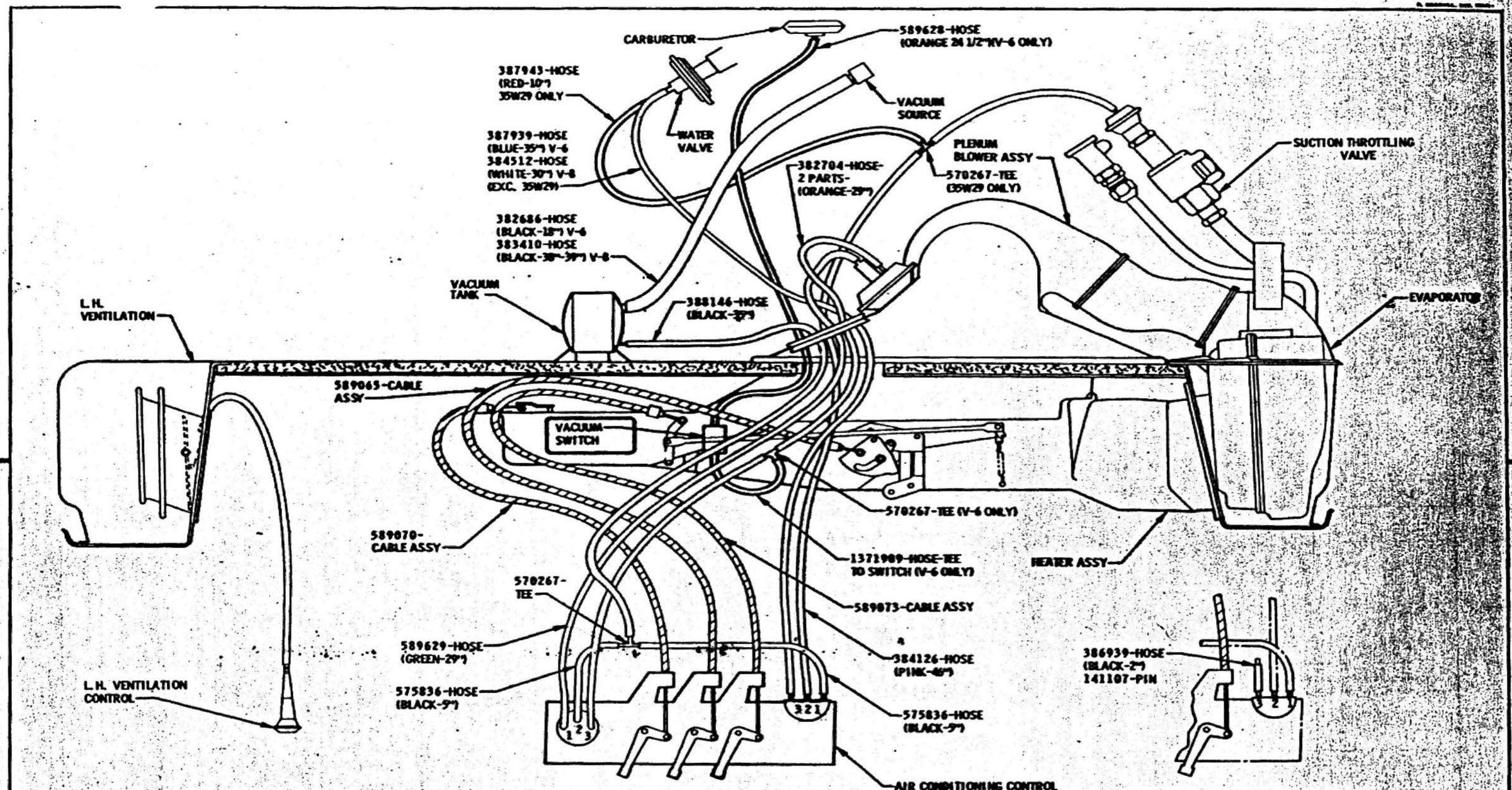

DATE	SYM	REVISION	DR.	CK.	DATE	SYM	REVISION	DR.	CK.	DATE	SYM	REVISION	DR.	CK.
										11-5-64	D	REVISED & REDRAWN		

INSTALLATION: AIR CONDITIONING

DATE: JULY 9, 1964
DR. BY: JOE GALL
CHECKED: H. VAN PELT
APPR.
APPR.

FIRST USED: 1965
Oldsmobile Service Illustration
PAGE: 35C60-2.29
DRAWING: F-85
REF.: 35C60
PART NO.: 386023

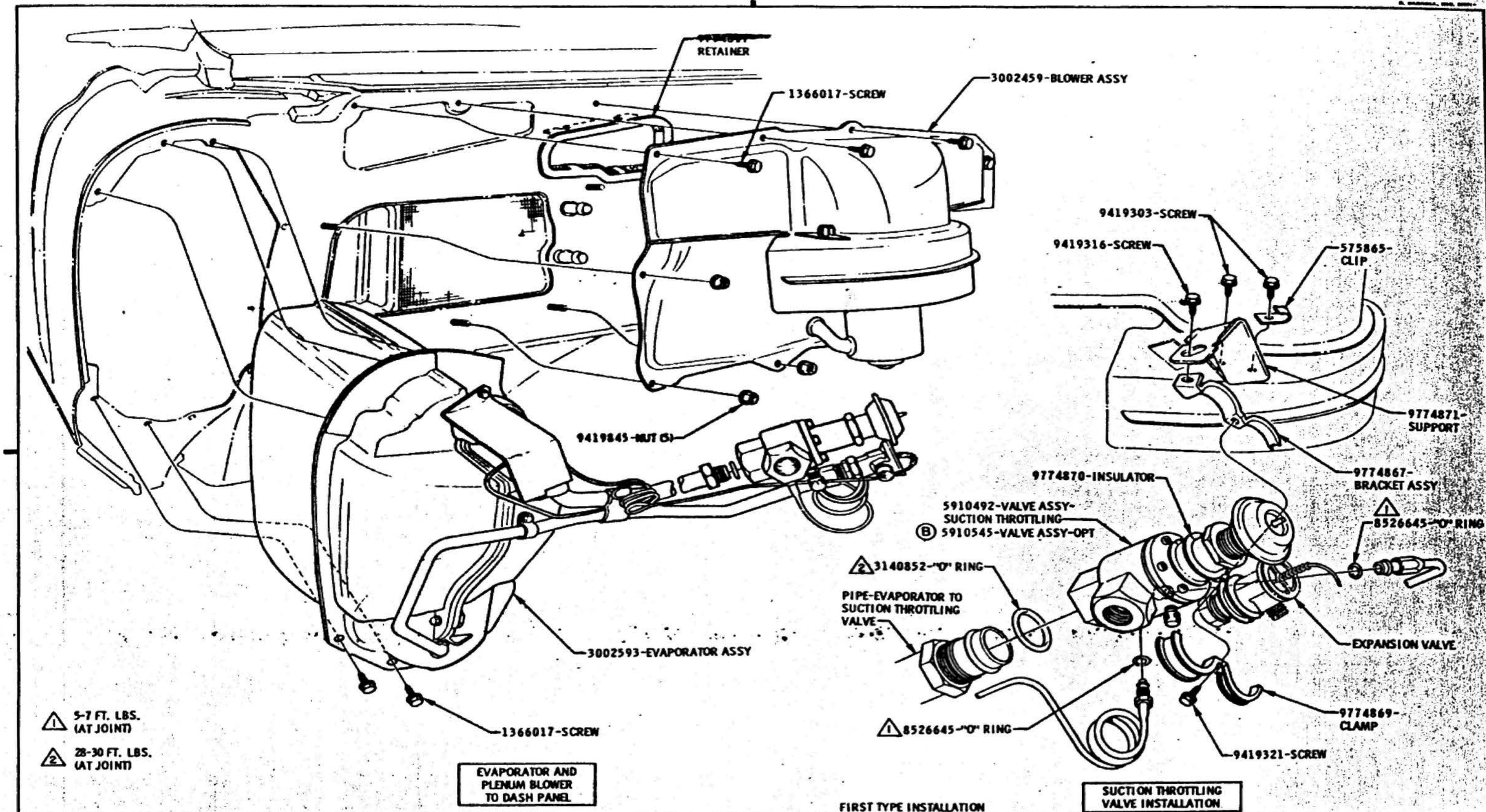

DATE	SYM	REVISION	DR.	CK.	DATE	SYM	REVISION	DR.	CK.	DATE	SYM	REVISION	DR.	CK.
										1-6-65	B	5910545 OPT. VALVE ADDED		VP
										11-13-64	A	REVISED & REDRAWN		VP

INSTALLATION	AIR CONDITIONING		
DATE SEPT. 24, 1964	FIRST USED 1965	Oldsmobile Service ILLUSTRATION	PAGE 35C60-2.30
DR. BY JOE GALL			
CHECKED H. VAN PELT	SERIES F-85	REF. 35C60	PART NO. 386023
APPR.			
APPR.			

1. 20-25 FT. LBS.
2. 15-20 FT. LBS. (AT JOINT)
3. 21-27 FT. LBS. (AT JOINT)
4. 11-13 FT. LBS. (AT JOINT)

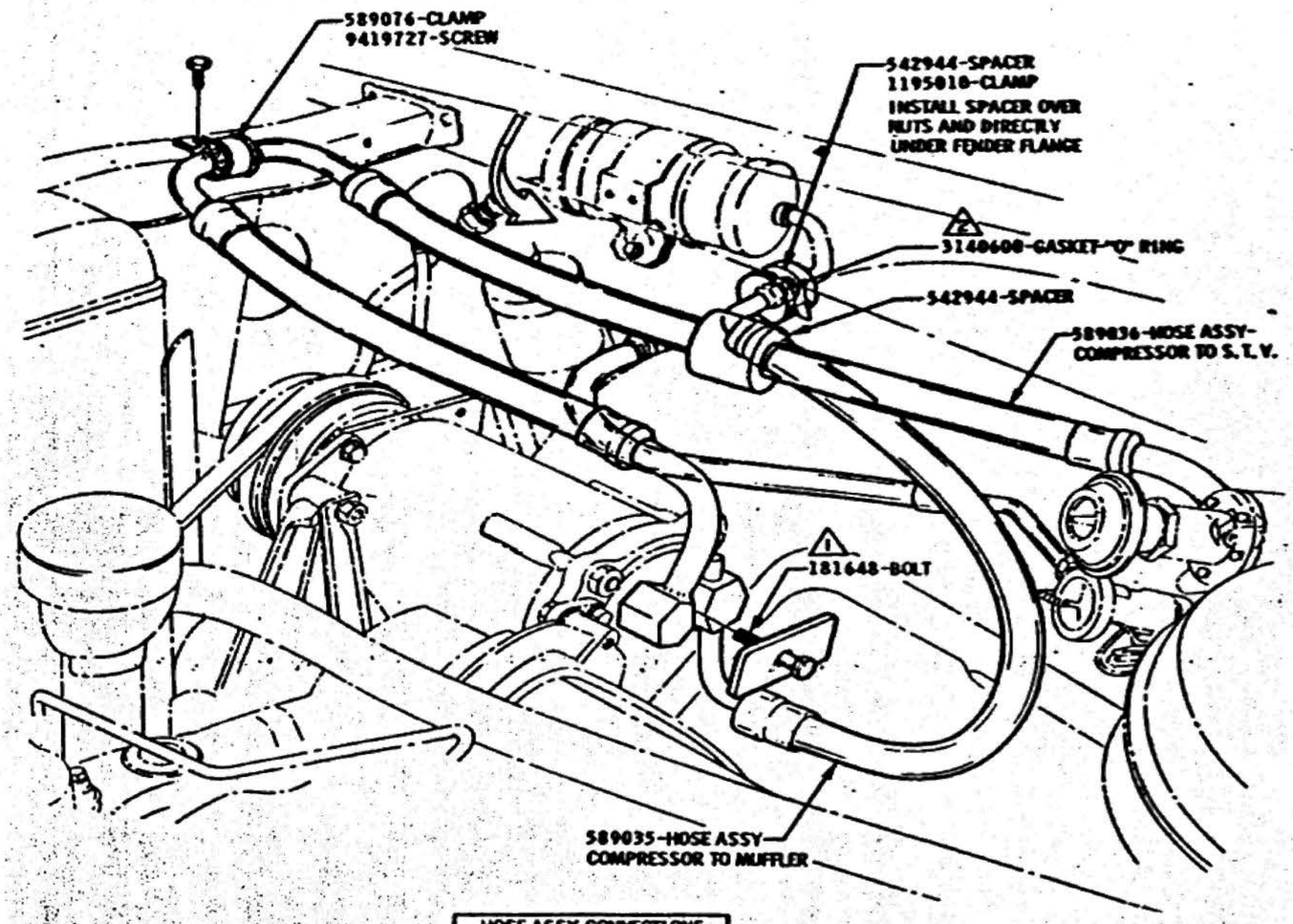

HOSE ASSY CONNECTIONS

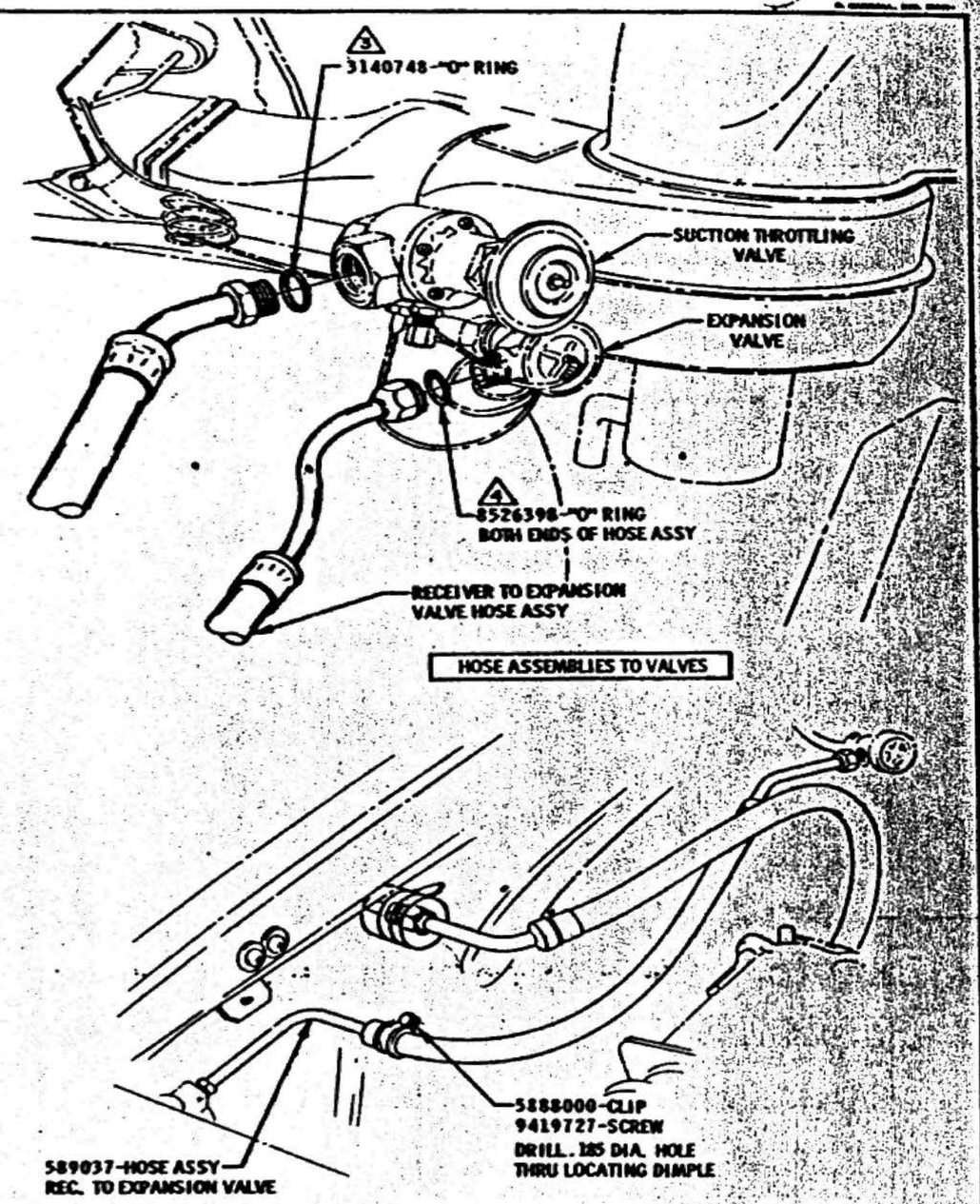

VIEW IN DIRECTION OF ARROW

FIRST TYPE INSTALLATION

FOR CARS WITH V-8 ENGINE

DATE	SYM	REVISION	DR.	CK.	DATE	SYM	REVISION	DR.	CK.	DATE	SYM	REVISION	DR.	CK.
										11-19-64	A	REVISED & REDRAWN		

INSTALLATION: AIR CONDITIONING

DATE: SEPT. 24, 1964
DR. BY: JOE BALL
CHECKED: H. VAN PELT
APPR.
APPR.

FIRST USED: 1965
Oldsmobile Service ILLUSTRATION
DRAWING: F-85
REV.: 35C60
PAGE: 35C60-2.31
PART NO.: 386023

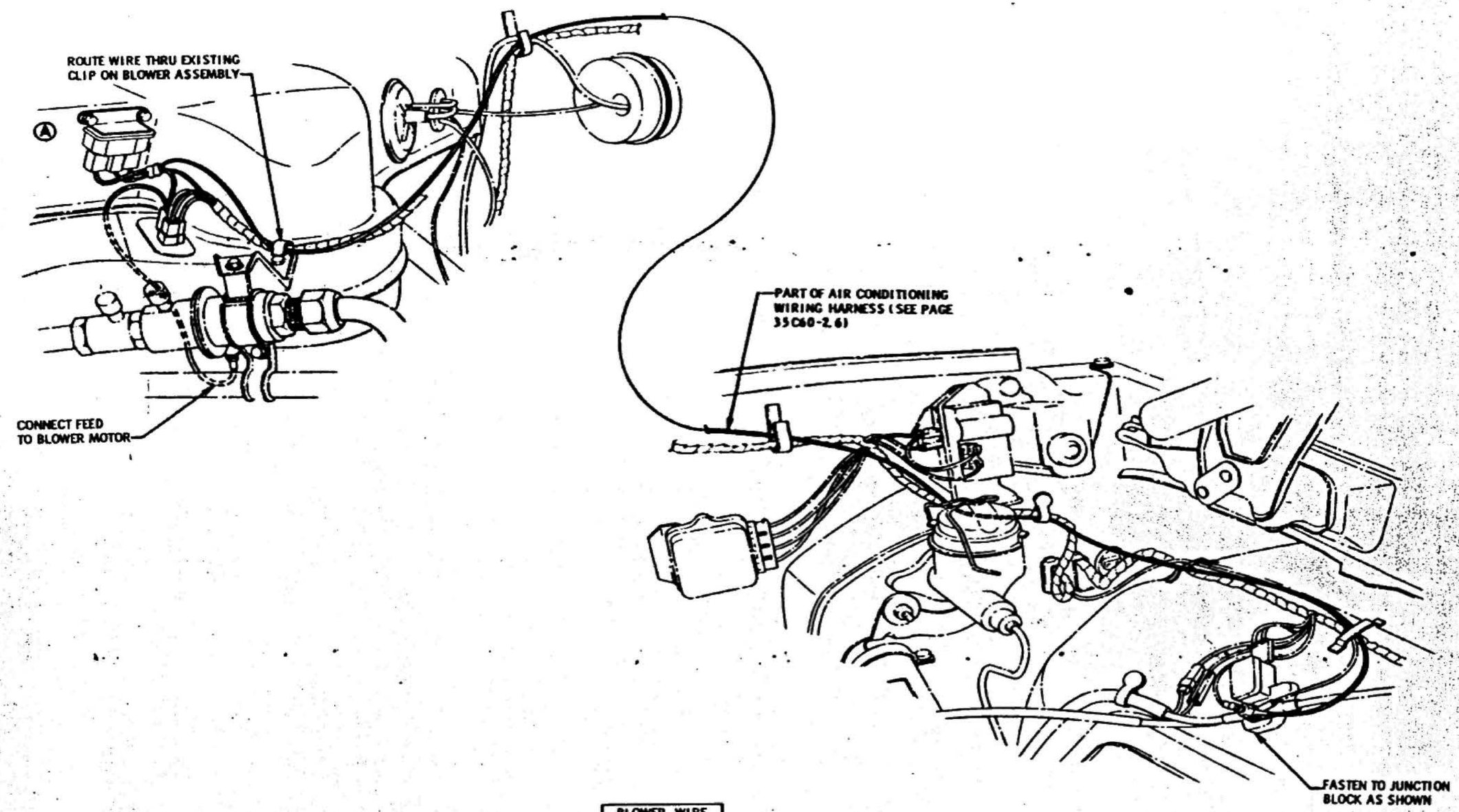

BLOWER WIRE ROUTING

DATE	SYM	REVISION	DR.	CK.	DATE	SYM	REVISION	DR.	CK.	DATE	SYM	REVISION	DR.	CK.
										5-12-65	A	RELAY REVERSED	HP	HD

INSTALLATION AIR CONDITIONING

DATE DEC. 14. 1964
DR. BY JOSEPH V. GALL
CHECKED H. VAN PELT
APPR.
APPR.

FIRST USED 1965
SERIES F-85
REF.

Oldsmobile GRAPHIC ILLUSTRATION

PAGE 35C60-2.32

PART NO. 386023

THE SUB ASSEMBLIES AS SHIPPED FOR FINAL ASSEMBLY WILL BE DEHYDRATED, LEAK TESTED, AND CAPPED. THE COMPRESSOR WILL CONTAIN A HOLDING CHARGE.

FOLLOWING IS A LIST OF PRECAUTIONARY MEASURES TO BE TAKEN PRIOR TO AND DURING ASSEMBLY OPERATIONS OF THE FINAL UNIT, AND TESTING REQUIREMENTS.

"A" GENERAL PRECAUTIONS

1. ALL SUB ASSEMBLIES SHIPPED DEHYDRATED AND SEALED TIGHT ARE TO REMAIN SEALED UNTIL JUST PRIOR TO MAKING CONNECTIONS.
2. ALL SUB ASSEMBLIES SHOULD BE AT ROOM TEMPERATURE BEFORE UNCAPPING. THIS PREVENTS THE ENTRANCE OF AIR INTO THE SYSTEM AND FORMING CONDENSATION.
3. IF FOR ANY REASON THE CAPS REMOVED DURING ASSEMBLY OPERATION AND CONNECTIONS ARE NOT MADE, THE TUBES SHOULD NOT REMAIN UNSEALED FOR A PERIOD OF MORE THAN FIFTEEN (15) MINUTES. RESEAL, IF PERIOD IS LONGER.
4. RECEIVER DEHYDRATOR SHOULD NEVER BE LEFT UNCAPPED MORE THAN 5 MINUTES.
5. COMPRESSORS ARE SHIPPED WITH TEN AND ONE HALF (10.5) FLUID OUNCES OF OIL AND A 2 OZ. HOLDING CHARGE OF 80% NITROGEN AND 20% REFRIGERANT 12.
6. AT NO TIME SHOULD THE COMPRESSOR SHAFT BE ROTATED UNTIL THE COMPLETE SYSTEM IS ASSEMBLED AND CHARGED WITH REFRIGERANT 12.
7. DURING ALL OPERATIONS, NECESSARY PRECAUTION SHOULD BE TAKEN TO KEEP THE SYSTEM CLEAN AND DRY. PREVENT ANY DIRT OR MOISTURE FROM GETTING ON OR IN THE CONNECTIONS. IT IS PARTICULARLY IMPORTANT THAT NO DIRT OR MOISTURE GET WITHIN THE SYSTEM.

"B" ASSEMBLY

1. ALL PRECAUTIONS SHOULD BE TAKEN TO PREVENT DAMAGE TO FITTINGS OR CONNECTIONS. EVEN MINUTE DAMAGE TO THE CONNECTION COULD CAUSE IT TO LEAK.
2. ANY FITTINGS GETTING GREASE OR DIRT ON THEM SHOULD BE WIPED CLEAN WITH AN ALCOHOL DAMPENED CLOTH. DO NOT USE CHLORINATED SOLVENTS FOR A CLEANING AGENT, AS THEY ARE CONTAMINANTS. IF DIRT, GREASE, OR MOISTURE GET INSIDE THE PIPES AND CANNOT BE REMOVED, THE PIPE IS TO BE REPLACED.
3. SEALING CAPS SHOULD BE REMOVED FROM SUB ASSEMBLIES JUST PRIOR TO MAKING CONNECTIONS FOR FINAL ASSEMBLY.
4. DISCARD "O" RINGS ON PIPES. INSTALL NEW "O" RINGS COATED WITH CLEAN COMPRESSOR OIL ON PIPE ENDS. KEEP OIL CONTAINER SEALED.
5. HARDGORY, WHEN TIGHTENING OR LOOSENING PIPE FITTINGS, ALWAYS USE TWO (2) WRENCHES, USE AN OPEN END WRENCH TO HOLD THE SEAT STATIONARY.
6. TORQUE "SUCTION AND DISCHARGE CLAMP ASSEMBLY" ATTACHING BOLT ON COMPRESSOR TO 20-25 LBS. FT. (A)
7. SET COMPRESSOR BELT TENSION WITH BURROUGHS BELT GAGE #33-70.
8. CHECK AIR GAP BETWEEN CLUTCH ARMATURE PLATE AND PULLEY, GAP SHOULD BE .022-.057.
9. IN ASSEMBLY, CARE MUST BE EXERCISED TO BE SURE THAT PIPES ARE NOT BENT OR MUTILATED THROUGH CARELESSNESS, OR DELIBERATELY BENT TO FACILITATE ANOTHER OPERATION.
10. FLEXIBLE HOSES ARE TO BE ROUTED & FITTINGS ARE TO BE TIGHTENED SO THAT HOSES ASSUME NATURAL CURVES, FREE OF TWIST OR STRAIN.
11. COMPLETED SYSTEMS ARE TO BE CHECKED FOR PIPES GROUNDING OUT ON SHEET METAL COMPONENTS. ANY DIRECT CONTACT OF PIPES & SHEET METAL PARTS IS TO BE ELIMINATED.

"C" LEAK TESTING

1. INSTALL CHARGING MANIFOLD GAUGE SET LINES TO GAUGE FITTINGS ON FREEZE CONTROL VALVE AND DISCHARGE HOSE ASSEMBLIES. (PURGE LINES BEFORE CONNECTING TO SYSTEM) (B)
2. OPEN GAUGE VALVES, PULL VACUUM UNTIL 28" VACUUM IS OBTAINED. CLOSE VACUUM PUMP VALVE AND STOP PUMP. OBSERVE GAUGE: IF LOSS OF VACUUM OCCURS, A LEAK IS IN SYSTEM. CHECK ALL CONNECTIONS IN SYSTEM FOR TIGHTNESS ADD SMALL AMOUNT OF REFRIGERANT 12 TO SYSTEM.

   CHECK FOR LEAK WITH G.E. ELECTRONIC DETECTOR OR EQUIV. REGULAR MAINTENANCE & PERIODIC CHECKS FOR SENSITIVITY LEVEL ARE A MUST. TWICE PER SHIFT--ONCE EVERY (4) HOURS IS RECOMMENDED. CORRECT LEAK, REPEAT PROCEDURE UNTIL ALL LEAKS ARE CORRECTED.
3. PULL VACUUM FOR CHARGING PROCEDURE TO 28".

"D" CHARGING SYSTEM

1. ALWAYS PURGE CHARGING LINES BEFORE PERMITTING CHARGE TO ENTER SYSTEM.
2. CHARGING SHOULD BE DONE AT 70°F. MINIMUM TEMPERATURE.
3. WITH ALL LEAKS CORRECTED AND VACUUM HELD IN SYSTEM TO 28", CHARGE SYSTEM WITH INITIAL CHARGE OF REFRIGERANT 12.
4. CLOSE HIGH PRESSURE LINES ON GAUGE SET.
5. START ENGINE OR AUXILIARY POWER AND OPERATE AT SPEED CORRESPONDING TO 1500 ENGINE R.P.M. NORMAL PUSH BUTTON MUST BE "IN" AND TEMP. LEVER SET TO FULL COLD POSITION AND FAN POSITION AS SHOWN BELOW DEPENDING ON THE ATMOSPHERIC TEMPERATURE.

ATMOSPHERIC TEMPERATURE °F	FAN SWITCH POSITION
70-80°	HIGH
80-90°	MEDIUM
90°	LOW

CHARGE UNTIL LIQUID LINE INDICATOR SHOWS CLEAR, THEN ADD ONE QUARTER (1/4) POUND. REFRIGERANT 12 CHARGE: FBS - 3.75#, B/C 4.00#.

6. SHUT OFF ENGINE AND DISCONNECT CHARGING LINES. INSTALL CAPS ON SERVICE VALVES.
7. MAKE FINAL CHECK FOR LEAKS AT THIS TIME, MAXIMUM LEAK RATE: ONE (1) POUND IN FIFTY (50) YEARS AT ALL POINTS EXCEPT COMPRESSOR SEAL WHERE A LEAK RATE OF ONE (1) POUND IN FIFTEEN (15) YEARS WILL BE ACCEPTABLE. (C)

NOT REQUIRED IF EQUIPMENT IS USED TO FORCE COMPLETE CHARGE INTO SYSTEM.

DATE	SYM.	REVISION RECORD	APPROVED	DR.	CK.
2-3-64		WAS BC-34246		HO	[illegible]
3-3-64	A	20-25 LBS WAS 10-15		[illegible]	[illegible]
3-3-64	B	"FREEZE CONTROL" WAS			
		SUCTION THROTTLING VALVE		[illegible]	[illegible]
3-3-64	C	LINE FROM NOTE REMOVED		[illegible]	[illegible]
3-1-65	D	WAS SHEET 1 OF 5		[illegible]	[illegible]

OLDSMOBILE DIVISION
GENERAL MOTORS CORPORATION
LANSING, MICHIGAN

NO. 387795
LAST CHANGE D
SHEET 1 OF 4

TOLERANCES UNLESS OTHERWISE SPECIFIED ± .02 ALLOWED ON TWO PLACE DECIMALS ± .010 ALLOWED ON THREE PLACE DECIMALS ON ALL CASTINGS AND FORGINGS ALLOW FOR FINISH AS FOLLOWS F_1-.030; F_2-.06; F_3-.09; F_4-.12 ETC.
COMMERCIAL TOLERANCES APPLY TO SHEET METAL GAUGES, TUBING, ROLLED, DRAWN OR EXTRUDED SECTIONS & STANDARD PARTS

DO NOT SCALE

DATE DWG. JANUARY 21, 1964	DR. PERKINS
SCALE	CK.
PART USED 1965 - ALL	APPR.
REFERENCE BOM	APPR.
MATERIAL SPEC.	APPR.

NAME CHART - AIR CONDITIONING PROCEDURE

D. REQ. PART NO. 387795

35C60-3.1

LAST CHANGE D
SHEET 1 OF 4
NO. 387795

SHEET 1 OF 4

DD

"E" VALVE CHECKS AND CORRECTIVE ADJUSTMENT

1. SUCTION THROTTLING VALVE
   A. THE PROPER CONTROL ACTION OF THE VALVE IS TO BE CHECKED AS FOLLOWS.
      1. CONNECT PRESSURE GAUGE TO FITTING PROVIDED ON SUCTION THROTTLING VALVE.
      2. RUN ENGINE AT 2000 R.P.M., INSTRUMENT PANEL TEMP. CONTROL HELD TO FULL COLD POSITION.
      3. WHEN VALVE STARTS TO CONTROL, GAUGE POINTER WILL DIP SLIGHTLY BELOW OPERATING PRESSURE AND THEN RISE AND HOLD AT OPERATING PRESSURE. OBSERVE OPERATING PRESSURE, WHICH SHOULD BE 29-30 P.S.I. (@900' ALTITUDE) THREE (3) MINUTES AFTER VALVE HAS STARTED TO CONTROL.
   B. THE VALVE IS NOT ADJUSTABLE EXTERNALLY.

2. PRESSURE GAUGES
   A. IT IS IMPORTANT THAT ALL PRESSURE GAUGES USED TO CHECK VALVE OPERATION BE CHECKED AT PERIODIC INTERVALS FOR ACCURACY. (WEEKLY INTERVALS SUGGESTED.) GAUGES MUST BE OF THE PROPER RANGE FOR READING ACCURACY (0-60 RECOMMENDED FOR EVAPORATOR BACK PRESSURE.)

"F" COMPRESSOR OIL LEVEL CHECK (SEE ITEM "G" 1.B BELOW)

CHECK THE OIL LEVEL IN THE COMPRESSOR BY DRAINING AND MEASURING THE AMOUNT OF OIL. DO NOT ATTEMPT TO CHECK THE OIL LEVEL BY PARTIALLY UNSCREWING THE OIL FITTING AT THE BOTTOM OF THE COMPRESSOR.

"G" REPLACEMENT OF COMPONENTS AFTER THE SYSTEM HAS BEEN CHARGED AND OPERATED.

1. COMPRESSOR
   A. DRAIN AND ACCURATELY MEASURE THE AMOUNT OF OIL IN THE DEFECTIVE COMPRESSOR. DO NOT RECHARGE THE COMPRESSOR WITH OIL IF IT WILL BE RETURNED TO VENDOR.
   B. EXAMINE OIL FROM DEFECTIVE COMPRESSOR FOR IMPURITIES. IF OIL CONTAINS METALIC PARTICLES ALL LINES MUST BE PURGED AND EXPANSIONS VALVE AND RECEIVER-DEHYDRATOR CHANGED. (REFERENCE FOLLOWING ITEM C-2)
   C. DRAIN ALL OIL FROM THE NEW COMPRESSOR.
   D. RECHARGE THE NEW COMPRESSOR WITH THE SAME AMOUNT OF OIL THAT WAS DRAINED FROM THE DEFECTIVE COMPRESSOR.
   E. THIS PROCEDURE IS REQUIRED TO INSURE THAT THE COMPLETE SYSTEM IS NOT OVERCHARGED WITH OIL WHICH WILL HAPPEN IF A NEW COMPRESSOR WITH A FULL OIL CHARGE IS INSTALLED.
2. OTHER COMPONENTS
   A. OPERATE THE SYSTEM AT IDLE SPEED FOR APPROXIMATELY FIVE MINUTES TO RETURN AS MUCH OIL AS POSSIBLE TO THE COMPRESSOR CRANKCASE PRIOR TO REPLACEMENT OF A COMPONENT.
   B. ADDITIONS OF OIL INTO NEW COMPONENTS SHALL BE MADE IMMEDIATELY PRIOR TO ASSEMBLY OF THE COMPONENT INTO THE CAR. THE OIL SHALL BE ADDED IN SUCH A MANNER THAT THERE WILL BE NO LOSS OF OIL WITH THE COMPONENT IN ITS NORMAL POSITION ON THE CAR. WHEN IT IS DESIRABLE, THE OIL MAY BE ADDED DIRECTLY TO THE COMPRESSOR INSTEAD OF THE COMPONENT.
   C. OIL REQUIRED
      1. EVAPORATOR - 3 FLUID OUNCES
      2. RECEIVER-DEHYDRATOR - 1 FLUID OUNCE
      3. CONDENSER RECEIVER-DEHYDRATOR - 3 FLUID OUNCES

PIPE CONNECTING NUT TORQUE: "O" RING TYPE CONNECTORS

METAL PIPE O.D.	STEEL PIPE TORQUE LB. - FT.	ALUM. PIPE TORQUE LB.-FT.
1/4	10-15	5-7
3/8	30-35	11-13
1/2	30-35	15-20
5/8	30-35	21-27
3/4	30-35	28-33

STEEL TORQUES ARE TO BE USED ONLY WHEN BOTH ENDS OF A CONNECTION ARE STEEL.

HOSE CLAMP TORQUE:- 40 IN./LB.

2-3-64		HAS BC-34246		WO	
3-9-64	A2	NOTES REMOVED			RG
5-5-64	B2	NOTES ADDED		MT	
5-5-64	C2	NOTES REMOVED		MT	
3-1-65	D.	HAS SHEET 2 OF 5			

NO. 387795
LAST CHANGE D
SHEET 2 OF 4

TOLERANCES UNLESS OTHERWISE SPECIFIED ± .02 ALLOWED ON TWO PLACE DECIMALS ± .010 ALLOWED ON THREE PLACE DECIMALS ON ALL CASTINGS AND FORGINGS ALLOW FOR FINISH AS FOLLOWS F_1-.030; F_2-.06; F_3-.09; F_4-.12 ETC.
COMMERCIAL TOLERANCES APPLY TO SHEET METAL GAUGES, TUBING, ROLLED, DRAWN OR EXTRUDED SECTIONS & STANDARD PARTS

DO NOT SCALE

DATE DWN. JANUARY 21, 1964	DR. JACQUE PERKINS
SCALE	CK.
FIRST USED 1965 - ALL	APPL.
REFERENCE	APPL.
MATERIAL SPEC.	APPL.

NAME CHART - AIR CONDITIONING PROCEDURE

PART NO. 387795

OLDSMOBILE DIVISION
GENERAL MOTORS CORPORATION
LANSING, MICHIGAN

35C60-3.2

NO. 387795 LAST CHANGE D SHEET 2 OF 4

SHEET 2 OF 4

"H" PERFORMANCE TEST (CONTINUED)

6 - TYPICAL TEST DATA - 33-34-35-36-3800

IN FRONT OF CONDENSER		EVAPORATOR PRESSURE AT SUCTION THROTTLING VALVE (C) ±1 PSI	ENGINE R.P.M.	DISCHARGE AIR TEMP. R. H. NOZZLE (D) ±2 °F.	PRESSURE HIGH (DISCHARGE) (E) ±20 PSI
RELATIVE HUMIDITY	AIR TEMP. °F.				
20	60	29	2000 *	38	145
	70	29		40	172
	80	29		40	198
	90	29		43 1/2	219
	100	33		50	263
	110	38		61	310
30	60	29	2000 *	38	146
	70	29		40	173
	80	29		42	203
	90	29		47	227
	100	34 1/2		56	273
	110	43		69	330
40	60	29	2000 *	38	148
	70	29		40	174
	80	29		42 1/2	206
	90	31		49	235
	100	38		63	290
	110	48		73	342
50	60	29	2000 *	38 1/2	150
	70	29		40	175
	80	29		46	210
	90	33		55	245
	100	40		68	300
	110	50		78	352
60	60	29	2000 *	39	158
	70	29		40	178
	80	31		49	215
	90	36		60	255
	100	46		72	310
70	60	29	2000 *	39	168
	70	29		42	180
	80	32		52	220
	90	37		63	262
	100	48		76	320
80	60	29	2000 *	39 1/2	175
	70	29		43	185
	80	34		54	223
	90	41		66	268
	100	53		80	330
90	60	29	2000 *	40	183
	70	29		44	190
	80	30		56	225
	90	43		69	274
	100	54		84	342

* 2260 RPM FOR V6 REFERENCE
2000 R.P.M. COMPRESSOR

DATE	SYM.	REVISION RECORD	APPROVED	DR.	CK.
6/9/64	A	REVISED		JP	
3-1-65	B	WAS SHEET 3 of 5			
3-1-65	C	ADDED ±1 PSI			
9-1-65	D	±2°F WAS ±1°F			
9-1-65	E	±20 PSI WAS ±10 PSI			

NO. 387795
LAST CHANGE E
SHEET 3 OF 4

TOLERANCES UNLESS OTHERWISE SPECIFIED ± .02 ALLOWED ON TWO PLACE DECIMALS ± .010 ALLOWED ON THREE PLACE DECIMALS
ON ALL CASTINGS AND FORGINGS ALLOW FOR FINISH AS FOLLOWS F_1-.030; F_2-.06; F_3-.09; F_4-.12 ETC.
COMMERCIAL TOLERANCES APPLY TO SHEET METAL GAUGES, TUBING, ROLLED, DRAWN OR EXTRUDED SECTIONS & STANDARD PARTS

DO NOT SCALE

DATE DWG. MAY 8, 1964
SCALE
FIRST USED 1965
REFERENCE 785
MATERIAL SPEC.
DR. JACQUI PERKINS
CK. Bardin
APPR.
APPR.
APPR.
NAME CHART-AIR CONDITIONING PROCEDURE
PART NO. 387795

OLDSMOBILE DIVISION
GENERAL MOTORS CORPORATION
LANSING, MICHIGAN

F-85 ONLY

35C60-3.3

SHEET 3 OF 4

CP. "0"

DATE	SYM.	REVISION RECORD	APPROVED	DR.	CK.
6/9/64	A	REVISED		JP	H

"H" PERFORMANCE TEST (CONTINUED)

6 - TYPICAL TEST DATA - 33-34-35-36-3800

IN FRONT OF CONDENSER		EVAPORATOR PRESSURE AT		DISCHARGE AIR TEMP. R. H. NOZZLE	PRESSURE HIGH (DISCHARGE)
RELATIVE HUMIDITY	AIR TEMP. °F.	SUCTION THROTTLING VALVE PSI	ENGINE R.P.M.	±1 °F.	±10 PSI
20	60	29	2000 *	38	145
	70	29		40	172
	80	29		40	198
	90	29		43 1/2	219
	100	33		50	263
	110	38		61	310
30	60	29	2000 *	38	146
	70	29		40	173
	80	29		42	203
	90	29		47	227
	100	34 1/2		56	273
	110	43		69	330
40	60	29	2000 *	38	148
	70	29		40	174
	80	29		42 1/2	206
	90	31		49	235
	100	38		63	290
	110	48		73	342
50	60	29	2000 *	38 1/2	150
	70	29		40	175
	80	29		46	210
	90	33		55	245
	100	40		68	300
	110	50		78	352
60	60	29	2000 *	39	158
	70	29		40	178
	80	31		49	215
	90	36		60	255
	100	46		72	310
70	60	29	2000 *	39	168
	70	29		42	180
	80	32		52	220
	90	37		63	262
	100	48		76	320
80	60	29	2000 *	39 1/2	175
	70	29		43	185
	80	34		54	223
	90	41		64	268
	100	53		80	330
90	60	29	2000 *	40	185
	70	29		44	190
	80	30		54	225
	90	43		65	274
	100	54		84	342

* 2260 RPM FOR V6 REFERENCE
2800 R.P.M. COMPRESSOR

35C60-3.4

SHEET 3 OF 4

NO. 387795
LAST CHANGE A
SHEET 3 OF 4

TOLERANCES, UNLESS OTHERWISE SPECIFIED ± .02 ALLOWED ON TWO PLACE DECIMALS ± .010 ALLOWED ON THREE PLACE DECIMALS
ON ALL CASTINGS AND FORGINGS ALLOW FOR FINISH AS FOLLOWS F_1-.030; F_2-.06; F_3-.09; F_4-.12 ETC.
COMMERCIAL TOLERANCES APPLY TO SHEET METAL GAUGES, TUBING, ROLLED, DRAWN OR EXTRUDED SECTIONS & STANDARD PARTS

DO NOT SCALE

DATE APPD. MAY 4, 1964	DR. JACQUI PERKINS
SCALE	CK. Bardin
FIRST USED 1965	APPR.
	APPR.
REFERENCE F85	APPR.
MATERIAL SPEC.	
NAME CHART-AIR CONDITIONING PROCEDURE	
	PART NO. 387795

OLDSMOBILE DIVISION
GENERAL MOTORS CORPORATION
LANSING, MICHIGAN

B

CP.'0'

DATE	SYM.	REVISIONS DESCRIBED	AUTHORITY	DR.	CK.
3-1-65	A	MAS SHEET 5 of 5			

H PERFORMANCE TEST (CONTINUED)

1. TEST WITH HOOD UP, DOORS OPEN, CONTROL LEVER TO FULL LEFT AND NORMAL BUTTON ENGAGED - FAN ON HIGH - AUXILIARY SIDE OUTLETS CLOSED, TRANSMISSION IN NEUTRAL.
2. USE AUXILIARY AIR VELOCITY OF 1100 FEET PER MINUTE INTO CONDENSER.
3. ATMOSPHERIC AIR TEMPERATURE AND RELATIVE HUMIDITY TO BE TAKEN AT FRONT OF CONDENSER.
4. THE AIR VOLUME FROM BOTH OUTER NOZZLES SHOULD BE APPROXIMATELY EQUAL. IF NOT, CHECK AIR HOSES FOR OBSTRUCTION AND PROPER INSTALLATION.
5. ADJUST ENGINE R.P.M. TO MAINTAIN 2000 R.P.M.

7 - TYPICAL TEST DATA FOR 1965 A/C

IN FRONT OF CONDENSER		EVAPORATOR PRESSURE AT P.O.A. VALVE ±1 PSI	ENGINE R.P.M.	DISCHARGE AIR TEMP. R.H. NOZZLE ± 2°F.	PRESSURE HIGH (DISCHARGE) ± 20 PSI
RELATIVE HUMIDITY	AIR TEMP. °F.				
20	70	29	2000	40	162
	80	29		43	187
	90	31		49	212
	100	32.5		54	247
	110	39		60	293
30	70	29	2000	40	162
	80	29		44	187
	90	31.5		50	215
	100	35		56	252
	110	44.5		63	317
40	70	29	2000	40	163
	80	29		45	189
	90	32		51	220
	100	37.5		58	255
	110	46		68	335
50	70	29	2000	40	164
	80	29.5		46	190
	90	32.5		52	225
	100	41		63	275
	110	51		73	342
60	70	29	2000	40	165
	80	30		47	192
	90	34.5		56	252
	100	44.5		68	292
	110	54		77	355
70	70	29	2000	41	167
	80	30.5		50	194
	90	37		60	240
	100	48		72	310
80	70	29	2000	44	169
	80	31.5		53	196
	90	39.5		64	247
	100	51		77	327
90	70	29	2000	47	171
	80	32		57	198
	90	42		68	254
	100	54		81	345

NO. 387795
LAST CHANGE A
SHEET 4 OF 4

35C60-3.5*

OLDSMOBILE DIVISION
GENERAL MOTORS CORPORATION
LANSING, MICHIGAN

TOLERANCES: UNLESS OTHERWISE SPECIFIED ± .02 ALLOWED ON TWO PLACE DECIMALS ± .010 ALLOWED ON THREE PLACE DECIMALS
ON ALL CASTINGS AND FORGINGS ALLOW FOR FINISH AS FOLLOWS F_r-.030; F_r-.06; F_r-.09; F_r-.12 ETC.
COMMERCIAL TOLERANCES APPLY TO SHEET METAL GAUGES, TUBING, ROLLED, DRAWN OR EXTRUDED SECTIONS & STANDARD PARTS

DO NOT SCALE

DATE DRG. 10-05-64	DR. M. J. BAKER
SCALE	CK. R. Chas Chastain
FINISH GRAD 1965	APPR.
REFERENCE	APPR.
MATERIAL SPEC.	APPR.

NAME CHART - AIR CONDITIONING PROCEDURE

B. PART NO. 387795

SHEET 4 OF 4

DD

CLOSED VENTILATION

DRAWINGS INCLUDED IN THIS SECTION ARE:

DWG. NO.	DWG. NAME	PAGE
	CLOSED CRANKCASE VENTILATION	35K20-2

RADIO

DRAWING NO.	DRAWING NAME	PAGE NO.
387350	RADIO RECEIVER	35U - 2.1
387438	MANUAL ANTENNA	35U - 3.1
386347	REAR SEAT SPEAKER (EXC. CONVERTIBLE)	35U - 4.1
386346	ELECTRIC ANTENNA	35U - 5.1

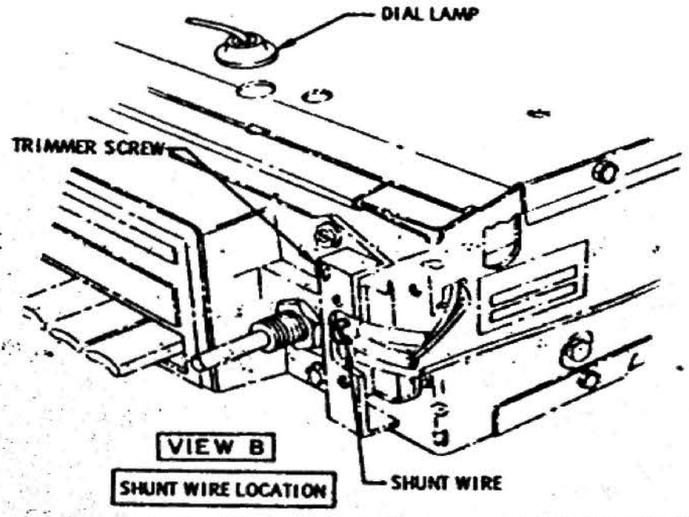

VIEW B

SHUNT WIRE LOCATION

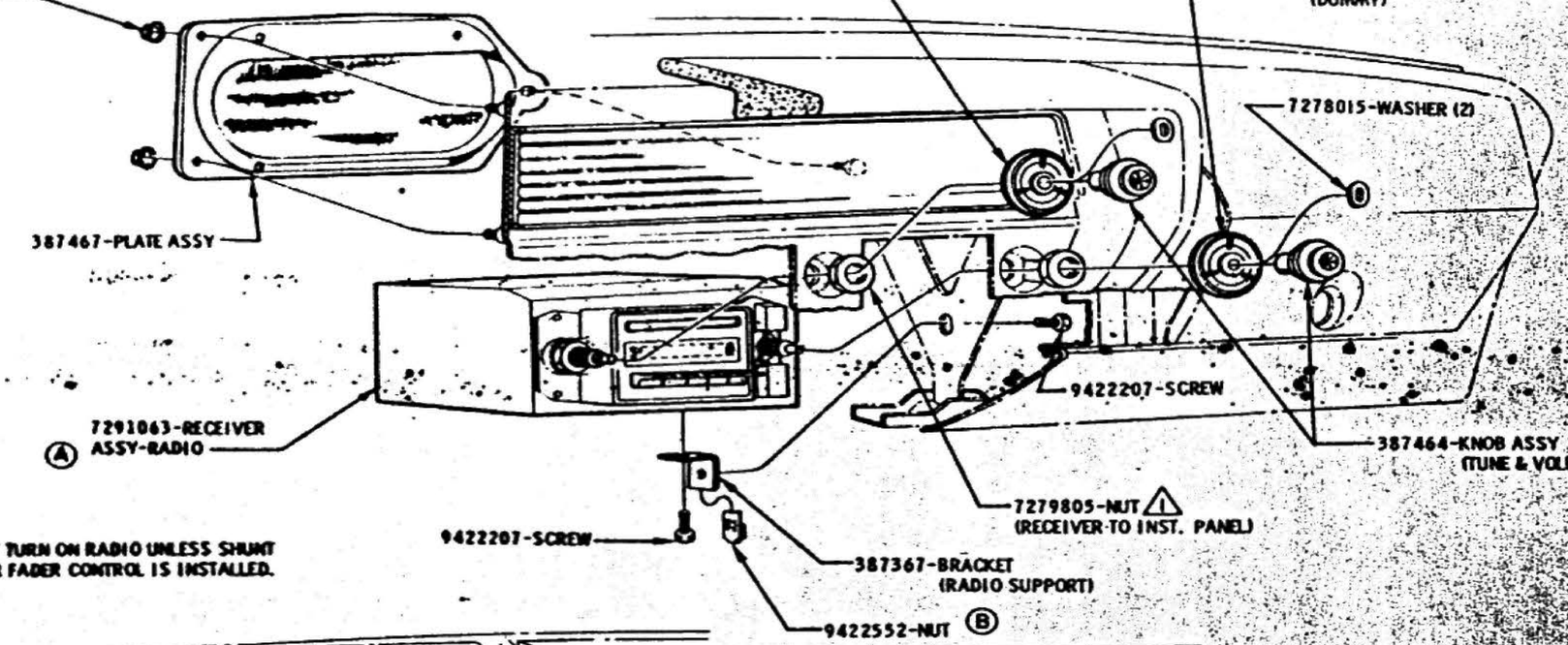

CAUTION: DO NOT TURN ON RADIO UNLESS SHUNT WIRE OR SPEAKER FADER CONTROL IS INSTALLED.

RADIO RECEIVER AND SPEAKER INSTALLATION

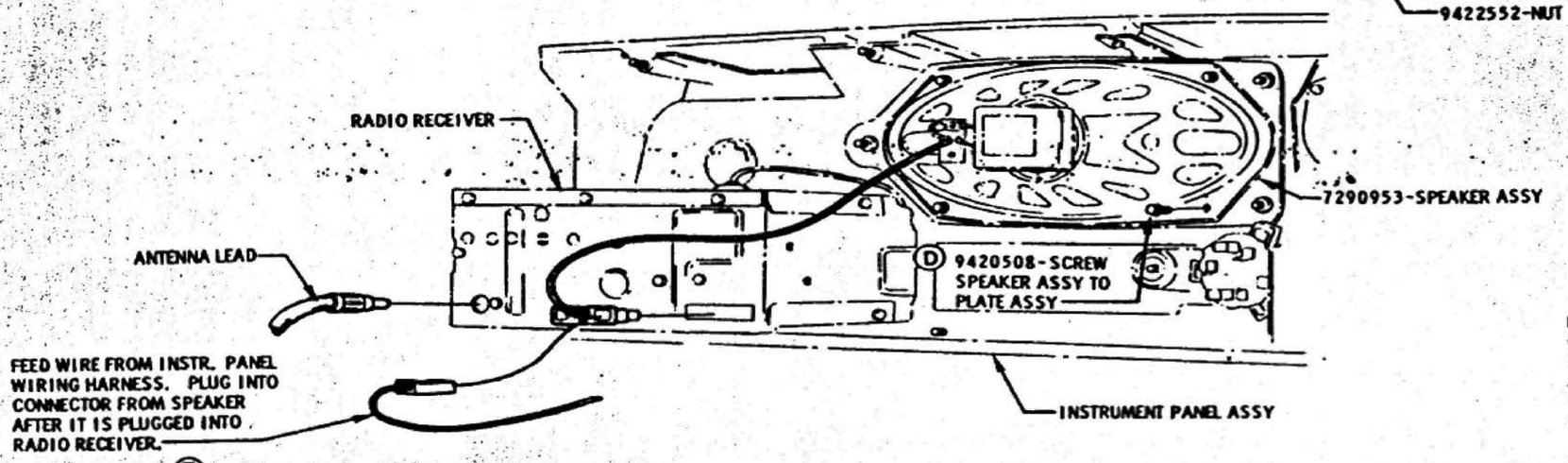

36 - 72 IN. LBS.

REAR VIEW OF RADIO AND SPEAKER IN INSTR. PANEL

TRIMMING TO BE DONE AFTER ALL SHEET METAL HAS BEEN INSTALLED

ANTENNA TRIMMING INSTRUCTIONS

EXTEND ANTENNA MAST TO 31 IN. PLUS OR MINUS 1 IN. ADVANCE VOLUME CONTROL TO FULL ON. TUNE RADIO TO THE PROVIDED SIGNAL (AT OR NEAR 1400 KC) WHICH HAS BEEN ADJUSTED TO PROVIDE THE LOWEST PRACTICAL AMOUNT OF SOUND FROM THE RADIO AFTER THE TRIMMER HAS BEEN PEAKED. CAREFULLY TURN ANTENNA TRIMMING SCREW BACK AND FORTH UNTIL MAXIMUM VOLUME HAS BEEN RECEIVED.

CAUTION: DO NOT TURN RADIO ON UNLESS SHUNT WIRE OR SPEAKER FADER CONTROL IS INSTALLED.

DATE	SYM	REVISION	DR	CK	DATE	SYM	REVISION	DR	CK	DATE	SYM	REVISION	DR	CK
										6-16-64	E	TORQUE ADDED	BA	VP
										4-22-64	D	WAS 9422207 SCREW	HJ	VP
										3-9-64	C	TRIMMING NOTE REVISED	CA	VP
										2-17-64	B	WAS 9422234-NUT	BP	VP
										1-30-64	A	7291063 NO ADDED	BP	VP

INSTALLATION . RADIO RECEIVER

DATE JAN. 9, 1964
DR. BY C. E. MAY
CHECKED H. VAN PELT
APPR.

FIRST USED 1965
SERIES F85
REF. 35U68

Oldsmobile GRAPHIC ILLUSTRATION

PAGE 35U-2.1

PART NO. 387350

OLDSMOBILE DIVISION GENERAL MOTORS CORPORATION LANSING 21 MICHIGAN

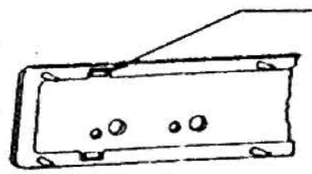

CRIMP ALL GRILLE TABS IN DIRECTION OF RECESSED AREA IN BEZEL. ASSEMBLY MUST BE FREE OF RATTLES, BUZZ OR OTHER ANNOYING NOISE.

REAR VIEW OF GRILLE FASTENING

VIEW "B"

TYPICAL SECTION THRU GRILLE ASSY

Ⓑ

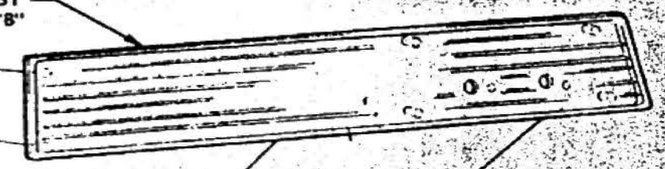

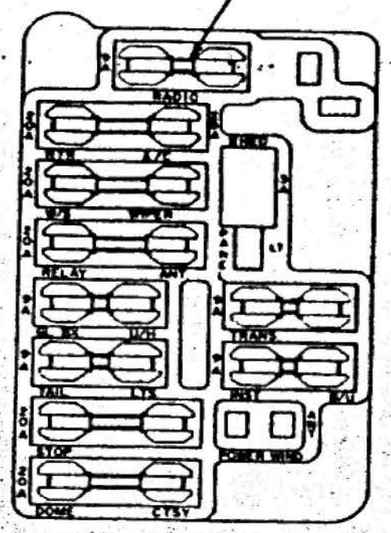

VIEW A

FUSE PANEL

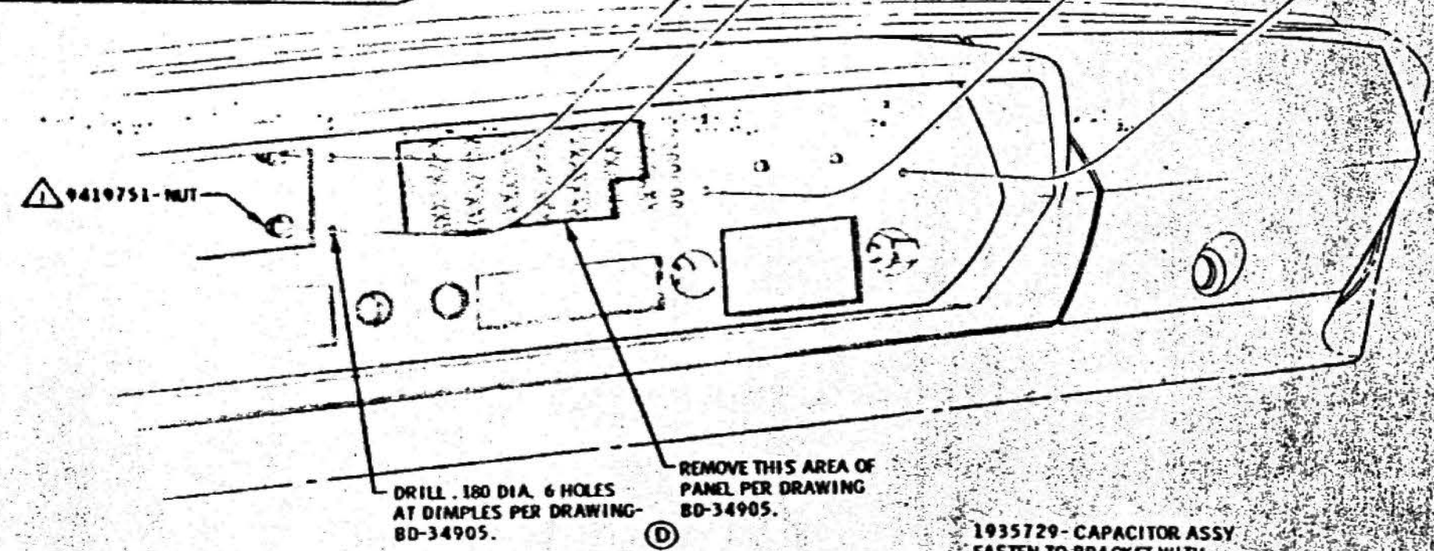

Ⓓ

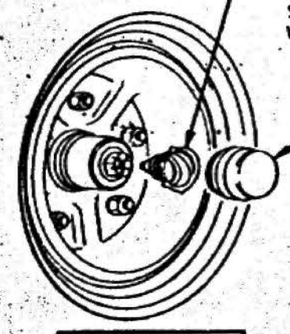

INSTALLATION OF STATIC COLLECTOR

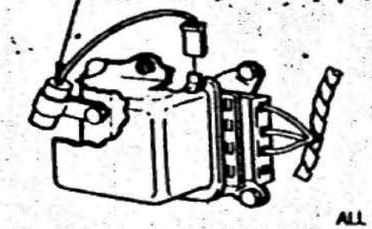

CONNECTING VOLTAGE REGULATOR CAPACITOR

ALL CONTACT SURFACES MUST BE CLEAN BEFORE ATTACHING CAPACITOR.

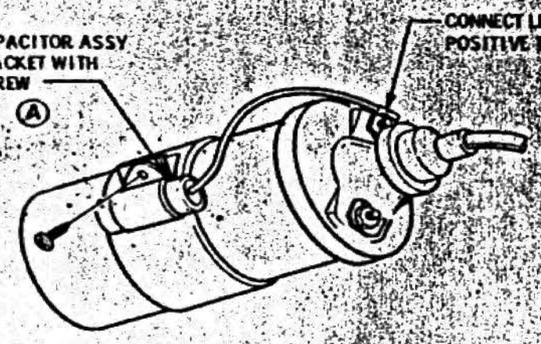

Ⓐ

CAPACITOR TO IGNITION COIL

Ⓒ

12 - 18 IN. LBS.

DATE	SYM	REVISION	DR.	CK.	DATE	SYM	REVISION	DR.	CK.	DATE	SYM	REVISION	DR.	CK.
										7-2-64	D	DRILLING NOTES ADDED	RA	VD
										6-16-64	C	TORQUE ADDED	RB	VD
										3-17-64	B	VIEW ADDED	CB	VD
										3-17-64	A	NMS 164349 SCREW	CB	VD

INSTALLATION — RADIO RECEIVER

DATE JAN 9 1964
DR. BY C.E. MAY
CHECKED H. VAN PELT
APPR.
APPR.

FIRST USED 1965 — Oldsmobile GRAPHIC ILLUSTRATION

SERIES F85 — REF. 96U68

PAGE 35U-2.2

PART NO. 387350

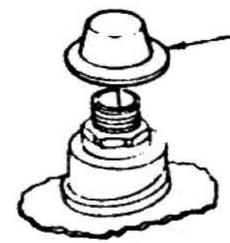

PLACE 389467-CAP OVER ANTENNA LEAD-IN ON CARS WITHOUT ANTENNA MAST. (FOR BODY WATER TESTING AND SHIPPING PURPOSES).

Ⓑ

CAPLUG INSTALLATION

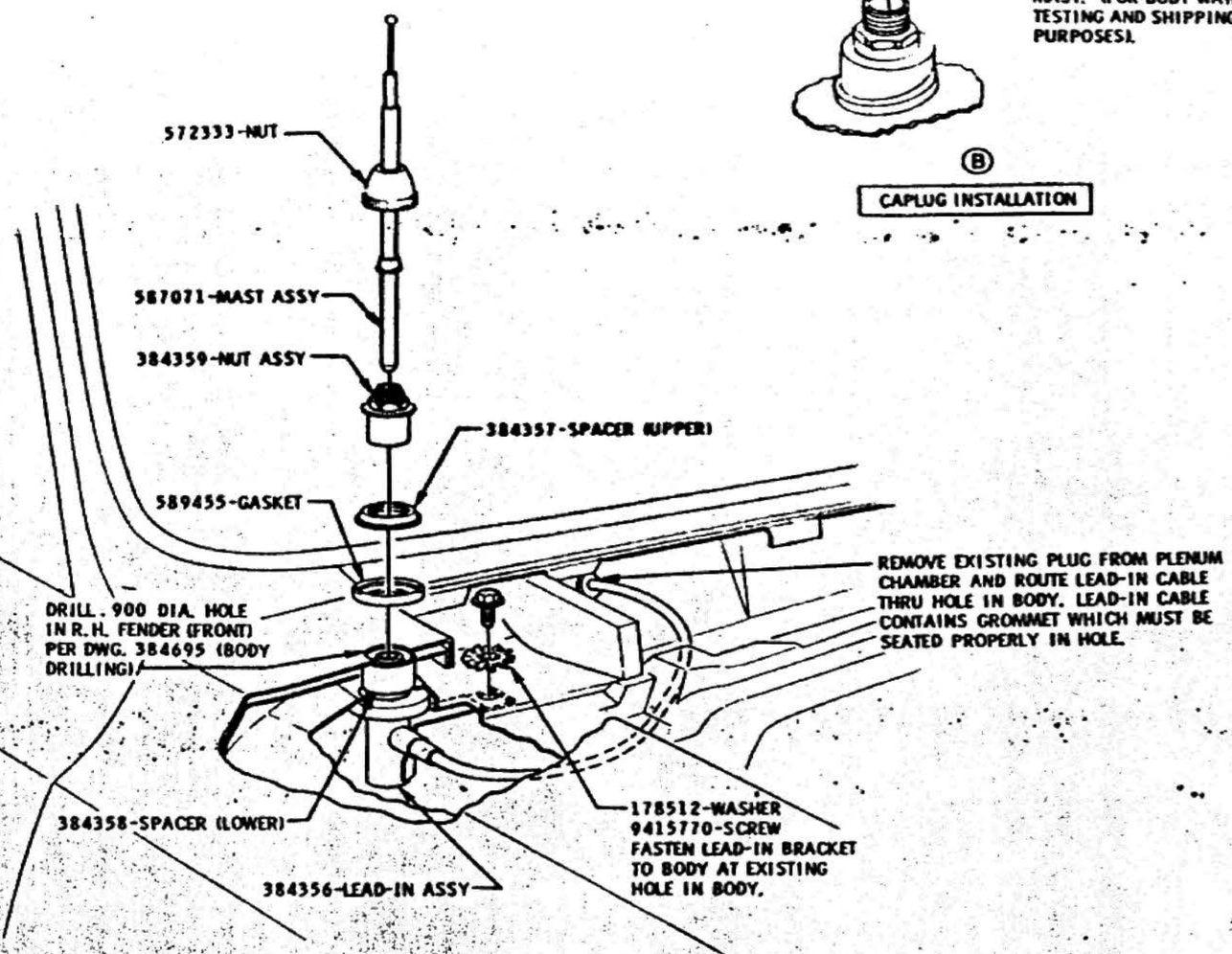

MAST AND LEAD-IN INSTALLATION

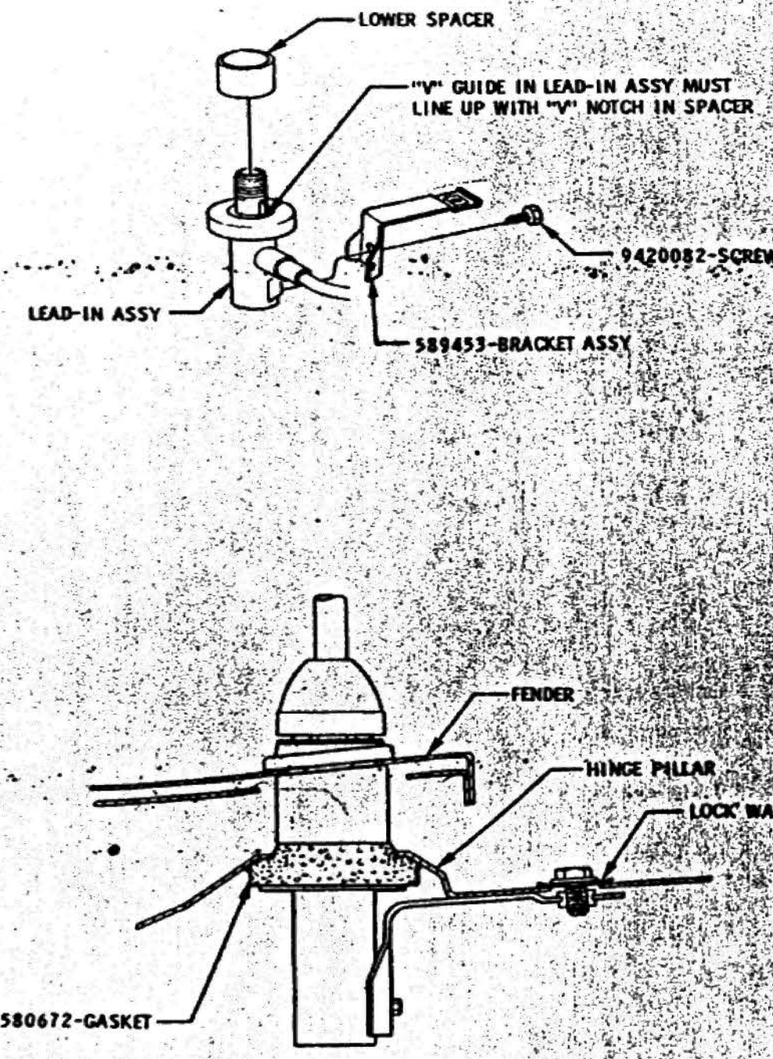

TYPICAL SECTION THRU BODY SHOWING ANTENNA MOUNTING

DATE	SYM	REVISION	DR.	CK.	DATE	SYM	REVISION	DR.	CK.	DATE	SYM	REVISION	DR.	CK.
										6-19-64	B	VIEW ADDED	BAVD	
										5-11-64	A	DRILLING NOTE ADDED	BAVD	

INSTALLATION	MANUAL ANTENNA		
DATE JAN. 9, 1964	FIRST USED 1965	Oldsmobile GRAPHIC ILLUSTRATION	PAGE 35U-3.1
DR. BY B. PARKER			
CHECKED H. VAN PELT	SERIES F85	REF. 35U63	PART NO. 387438
APPR.			
APPR.			

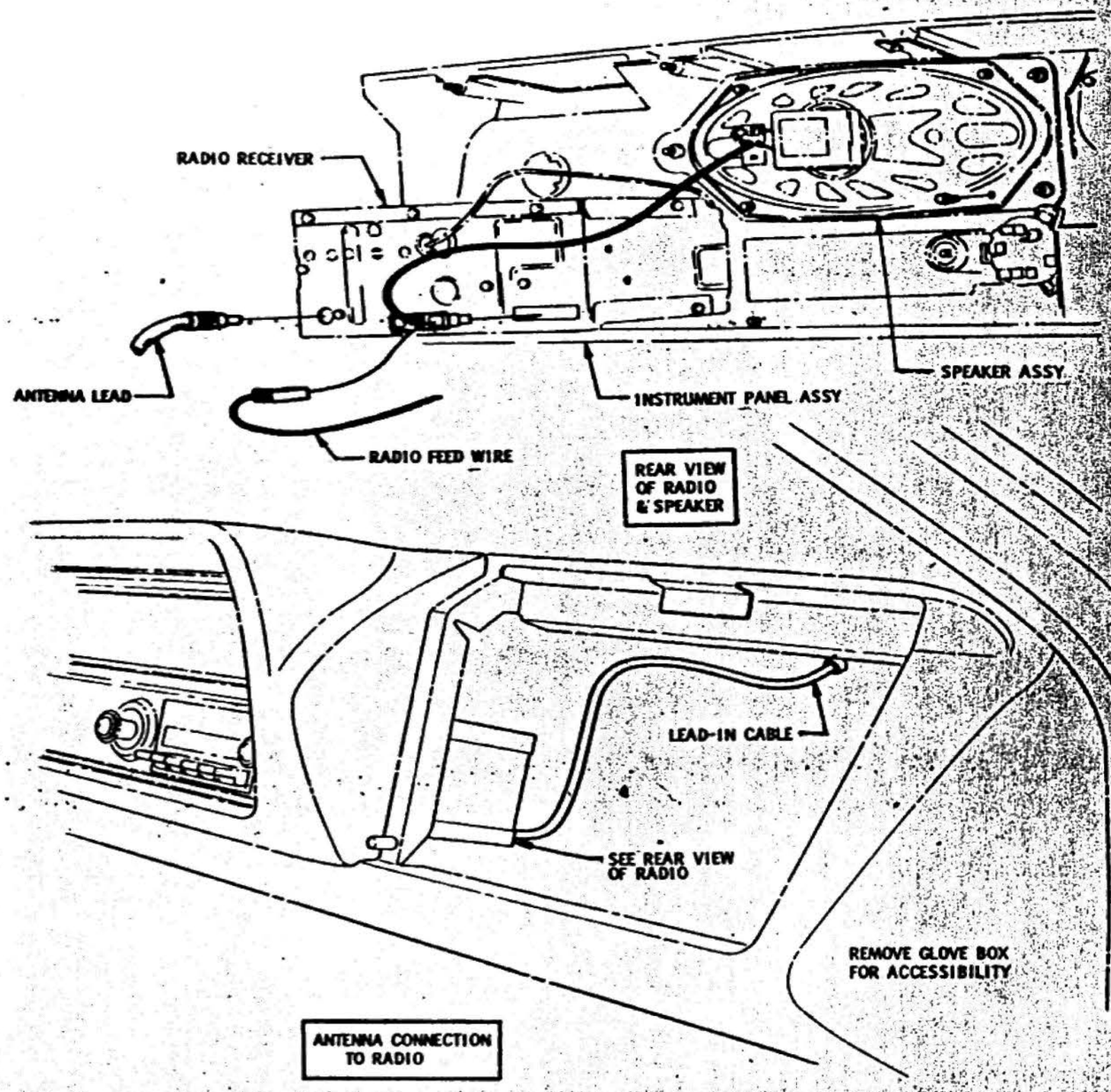

DATE	SYM	REVISION	DR.	CK.	DATE	SYM	REVISION	DR.	CK.	DATE	SYM	REVISION	DR.	CK.
										5-11-64	A	VIEW REMOVED	BP	VP

INSTALLATION **MANUAL ANTENNA**

DATE JAN. 9, 1964
DR. BY B. PARKER
CHECKED H. VAN PELT
APPR.
APPR.

FIRST USED 1965 — Oldsmobile GRAPHIC ILLUSTRATION

SERIES F85 — REF. 86U63

PAGE 35U-3.2

PART NO. 387438

CONTROL INSTALLATION

REMOVE DUMMY KNOB FROM R.H. SIDE OF RADIO CONTROL PANEL AND REPLACE WITH NEW CONTROL ASSY.

CAUTION: DO NOT TURN RADIO ON UNLESS SHUNT WIRE OR SPEAKER CONTROL IS INSTALLED.

CONNECT SPEAKER WIRE TO RADIO LEAD

AFTER COMPLETING ALL CONNECTIONS, TURN RADIO ON AND CHECK SPEAKER OPERATION.

1. TURN CONTROL TO LEFT. MAXIMUM VOLUME WILL BE FROM THE FRONT SPEAKER.
2. TURN TO CENTER POSITION. BOTH SPEAKERS SHOULD OPERATE.
3. TURN CONTROL KNOB TO RIGHT. MAXIMUM VOLUME WILL BE FROM REAR SPEAKER.

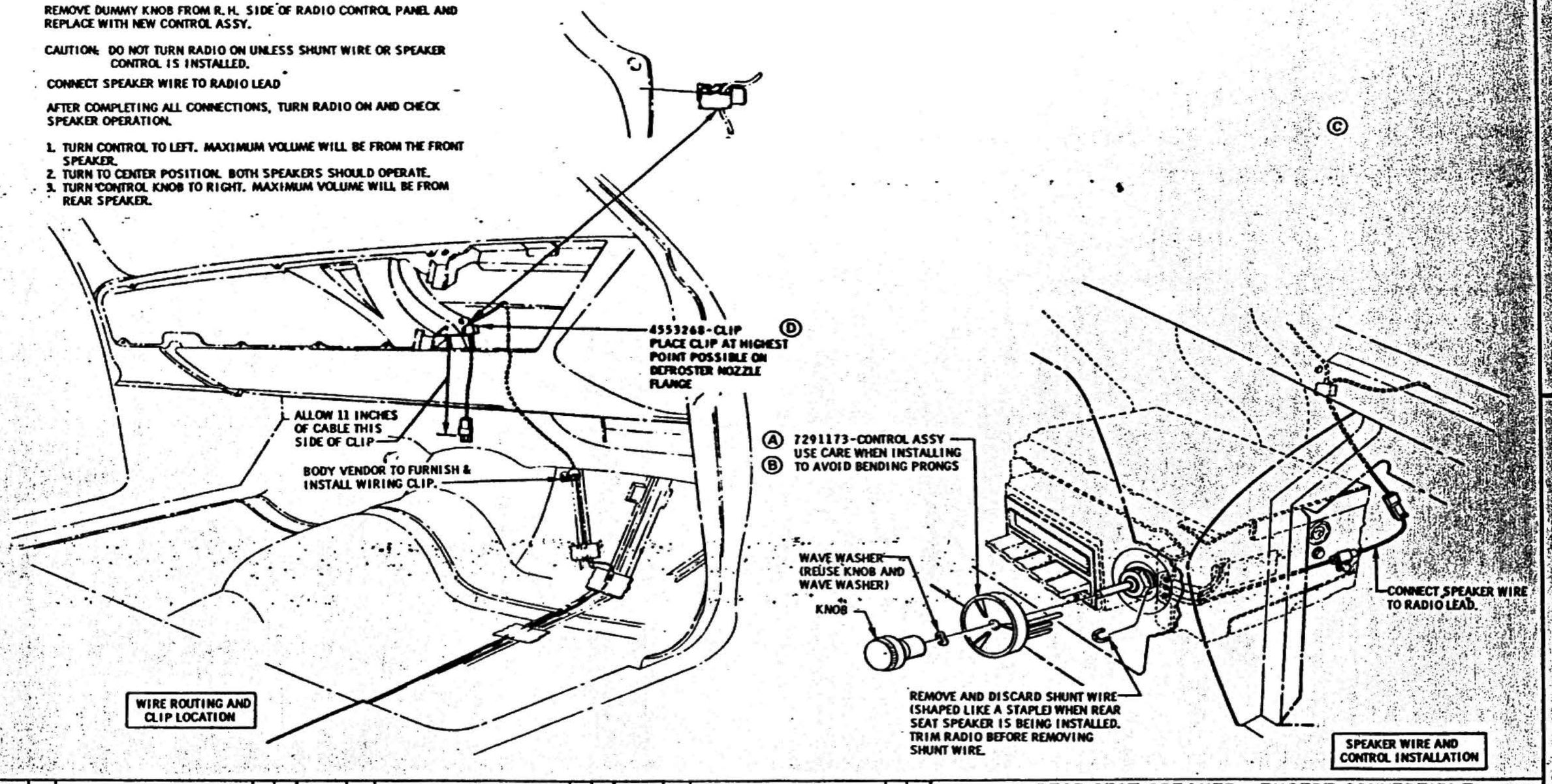

DATE	SYM	REVISION	DR.	CK.	DATE	SYM	REVISION	DR.	CK.	DATE	SYM	REVISION	DR.	CK.
										2-28-64	D	WAS 4157180-CLIP	BP	VP
										5-7-64	C	NOTES REMOVED	BP	VP
										2-27-64	B	WAS 7290143 CONV. ASSY	BP	VP
										11-20-63	A	7290143-CONTROL ADDED	BP	VP

INSTALLATION **REAR SEAT SPEAKER – EXCEPT CONVERTIBLE**

DATE OCT. 23, 1963
DR. BY B. PARKER
CHECKED H. VAN PELT
APPR.
APPR.

FIRST USED 1965
Oldsmobile GRAPHIC ILLUSTRATION
SERIES F 85
REF. 35UBO
PAGE 35U-4.1
PART NO. 386347

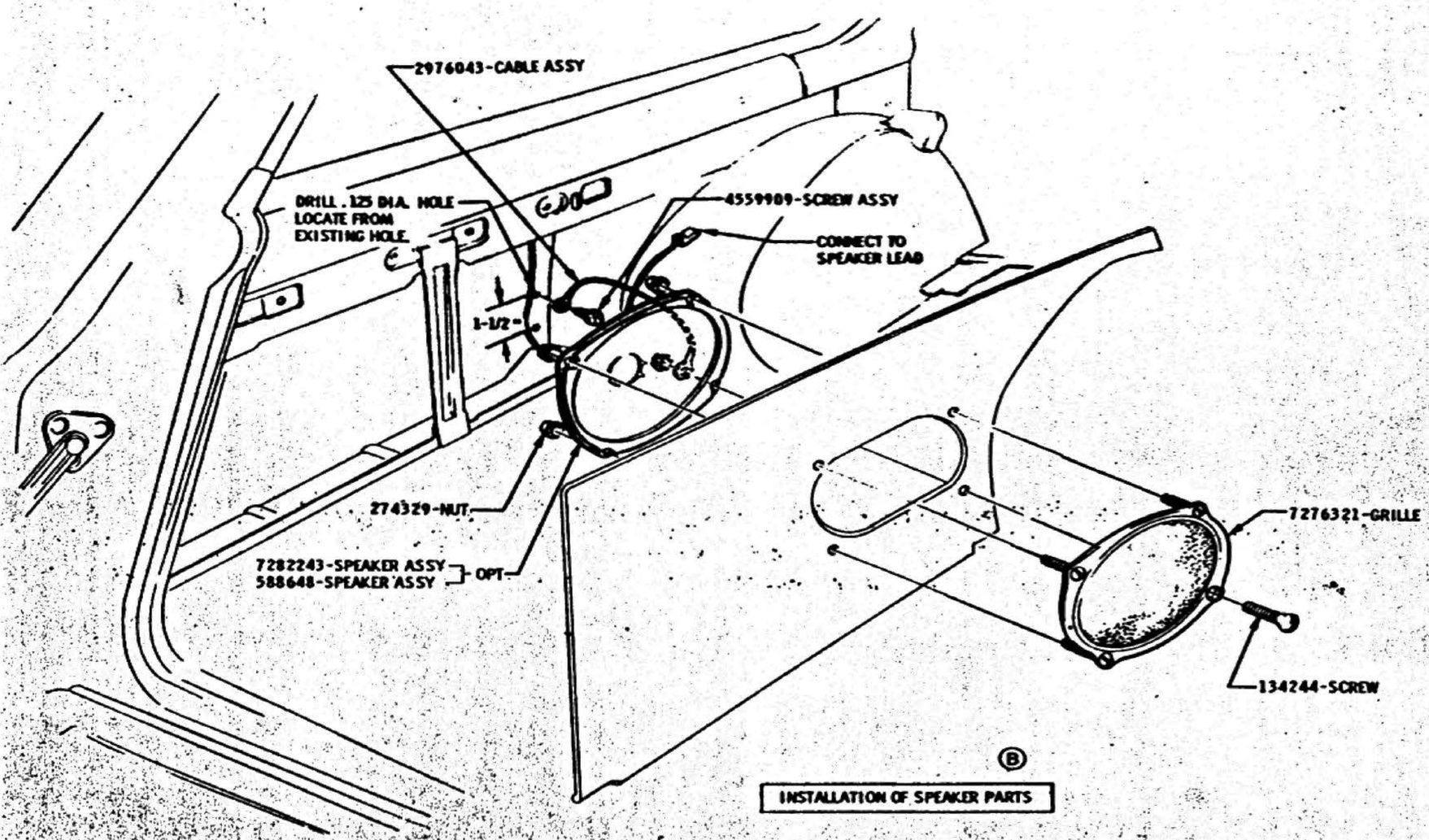

(B)

INSTALLATION OF SPEAKER PARTS

DATE	SYM	REVISION	DR.	CK.	DATE	SYM	REVISION	DR.	CK.	DATE	SYM	REVISION	DR.	CK.
										5-7-64	B	VIEW FROM PAGE 35U-43 ADDED	Bp	VP
										5-7-64	A	VIEWS CANCELLED	Bp	VP

INSTALLATION REAR SEAT SPEAKER - EXCEPT CONVERTIBLE

DATE OCT. 29, 1963
DR. BY B. PARKER
CHECKED H. VAN PELT
APPR.
APPR.

FIRST USED 1965
Oldsmobile GRAPHIC ILLUSTRATION
SERIES F 85
REF. 35U80
PAGE 35U-4.2
PART NO. 386347

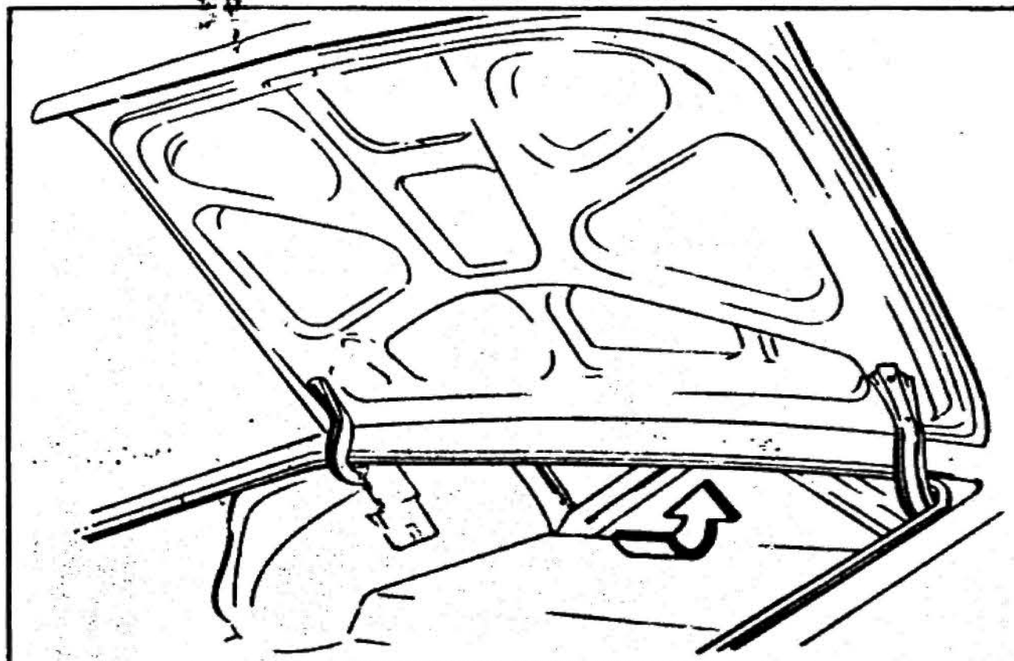

SEE VIEWS IN DIRECTION OF ARROW

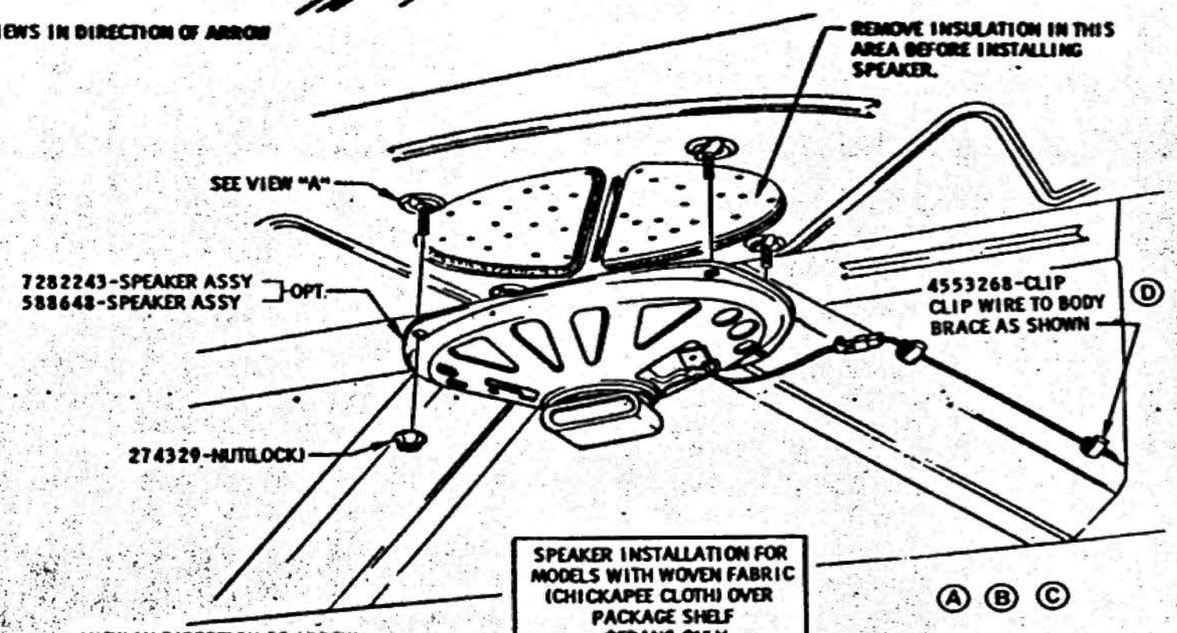

SPEAKER INSTALLATION FOR MODELS WITH WOVEN FABRIC (CHICKAPEE CLOTH) OVER PACKAGE SHELF SEDANS ONLY

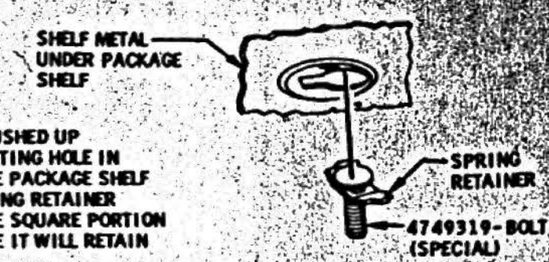

THE "T" BOLT IS PUSHED UP THROUGH THE EXISTING HOLE IN THE BOTTOM OF THE PACKAGE SHELF AGAINST THE SPRING RETAINER AND SLID INTO THE SQUARE PORTION OF THE HOLE WHERE IT WILL RETAIN ITSELF.

VIEW A

"T" BOLT INSTALLATION

DATE	SYM	REVISION	DR.	CK.	DATE	SYM	REVISION	DR.	CK.	DATE	SYM	REVISION	DR.	CK.
										12-20-64	D	WAS 415780-CLIP	KP	VP
										5-7-64	C	VIEWS FROM PAGE 35U-4.4 ADDED	BA	VP
										5-7-64	B	VIEWS MOVED TO PAGE 35U-4.2	BA	VP
										3-28-64	A	TEMPLATE NO. ADDED	BP	VP

INSTALLATION REAR SEAT SPEAKER - EXCEPT CONVERTIBLE

DATE OCT. 28, 1963
DR. BY B. PARKER
CHECKED H. VAN PELT
APPR.
APPR.

FIRST USED 1965
Oldsmobile GRAPHIC ILLUSTRATION
SERIES F85
REF. 35U80
PAGE 35U-4.3
PART NO. 386347

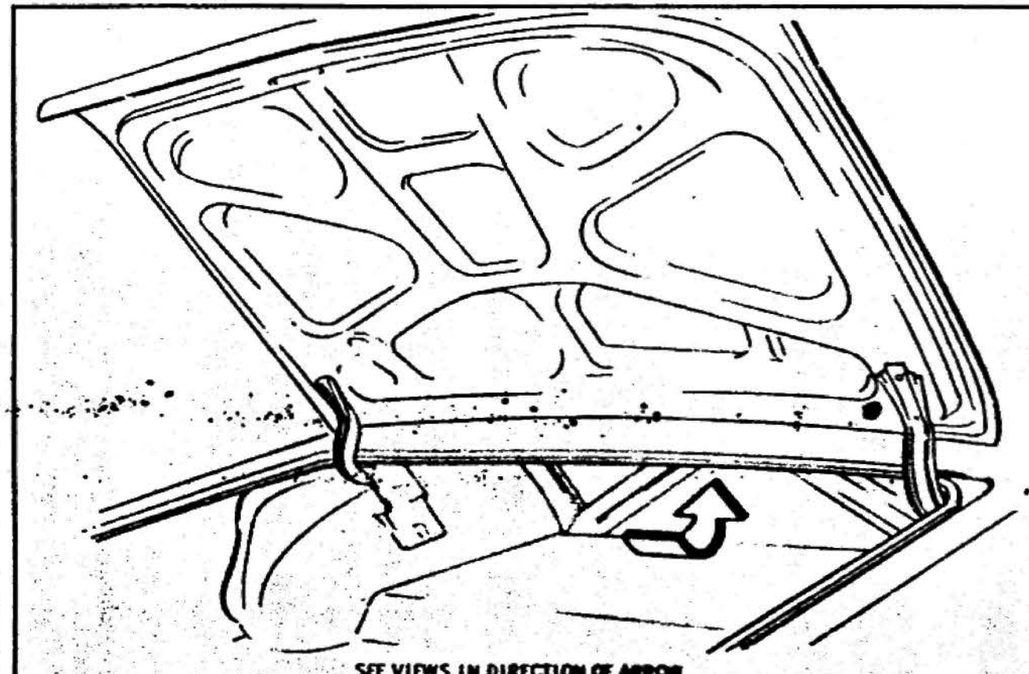

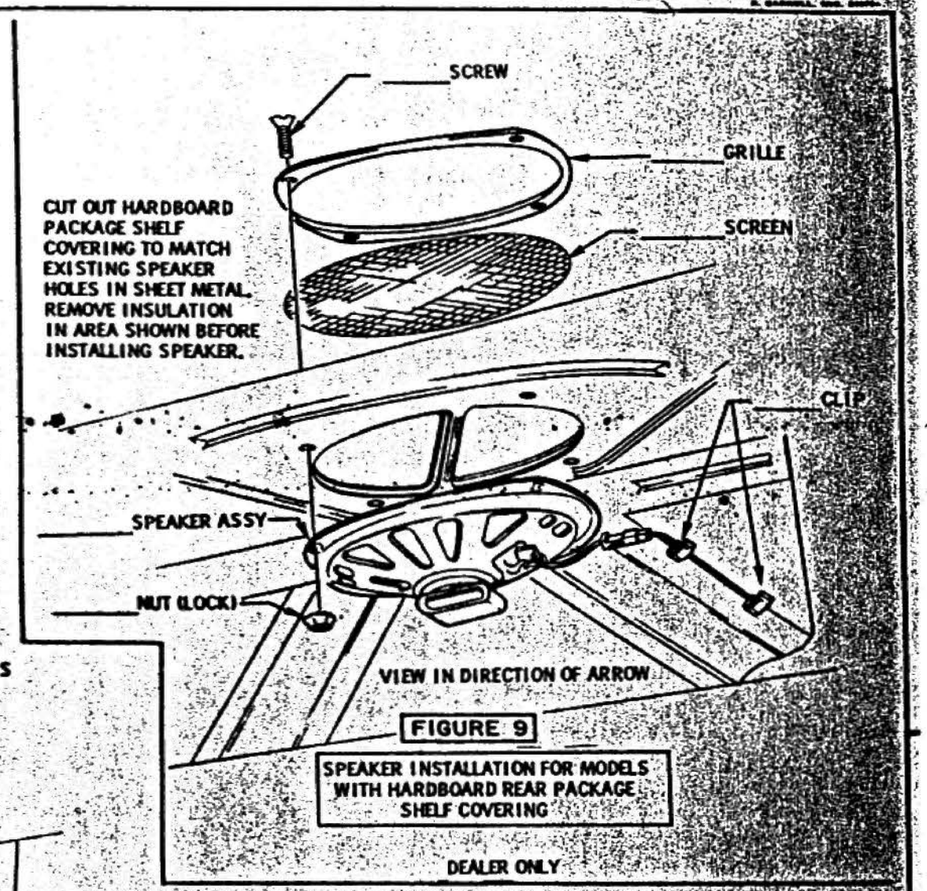

FIGURE 9

SPEAKER INSTALLATION FOR MODELS WITH HARDBOARD REAR PACKAGE SHELF COVERING

DEALER ONLY

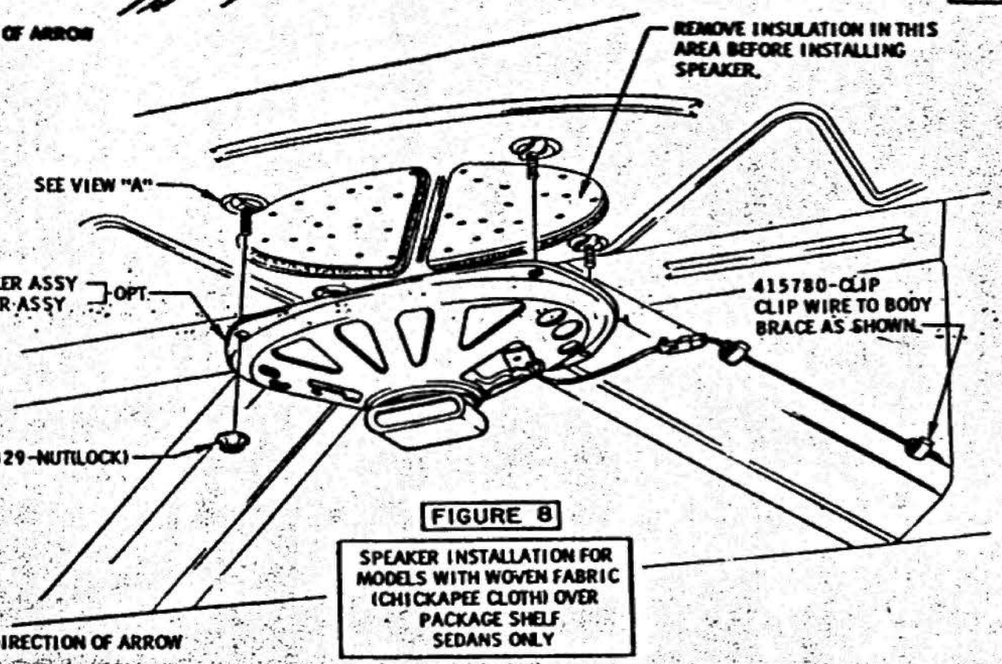

FIGURE 8

SPEAKER INSTALLATION FOR MODELS WITH WOVEN FABRIC (CHICKAPEE CLOTH) OVER PACKAGE SHELF SEDANS ONLY

THE "T" BOLT IS PUSHED UP THROUGH THE EXISTING HOLE IN THE BOTTOM OF THE PACKAGE SHELF AGAINST THE SPRING RETAINER AND SLID INTO THE SQUARE PORTION OF THE HOLE WHERE IT WILL RETAIN ITSELF.

VIEW A

"T" BOLT INSTALLATION

DATE	SYM	REVISION	DR.	CK.	DATE	SYM	REVISION	DR.	CK.	DATE	SYM	REVISION	DR.	CK.

INSTALLATION REAR SEAT SPEAKER-EXCEPT CONVERTIBLE

DATE OCT. 28, 1965	FIRST USED 1965	Oldsmobile Graphic Illustration	PAGE 35U-4.4
DR. BY B. PARKER			
CHECKED H. VAN PELT	SERIES F 85	REF. 35U80	PART NO. 386347
APPR.			
APPR.			

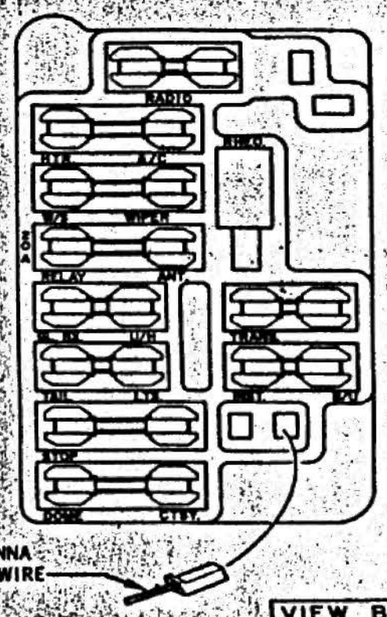

VIEW B

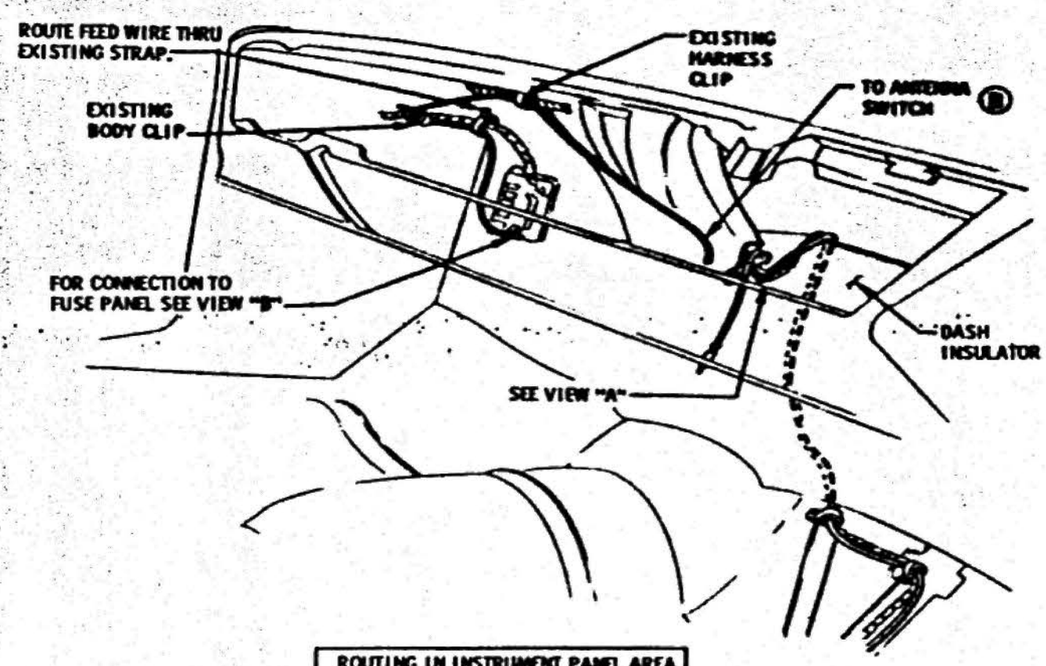

ROUTING IN INSTRUMENT PANEL AREA

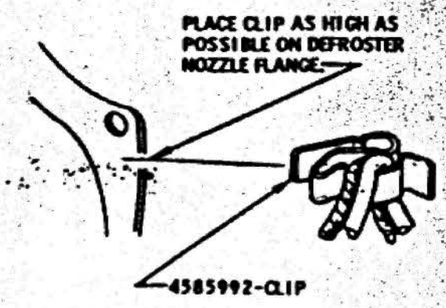

VIEW A

DATE	SYM	REVISION	DR.	CK.	DATE	SYM	REVISION	DR.	CK.	DATE	SYM	REVISION	DR.	CK.
										5-8-64	C	DEALER INFO. REMOVED	BP	VP
										11-22-63	B	WIRE ROUTING REVISED	BP	VP
										8-22-63	A	NOTE REVISED	BP	VP

INSTALLATION

DATE NOV. 13, 1963
DR. BY B. PARKER
CHECKED N. VAN PELT
APPR.
APPR.

ELECTRIC ANTENNA

FIRST USED 1965
Oldsmobile GRAPHIC ILLUSTRATION
SERIES F 85
REF. 35U75-80
PAGE 35U-5.1
PART NO. 386346

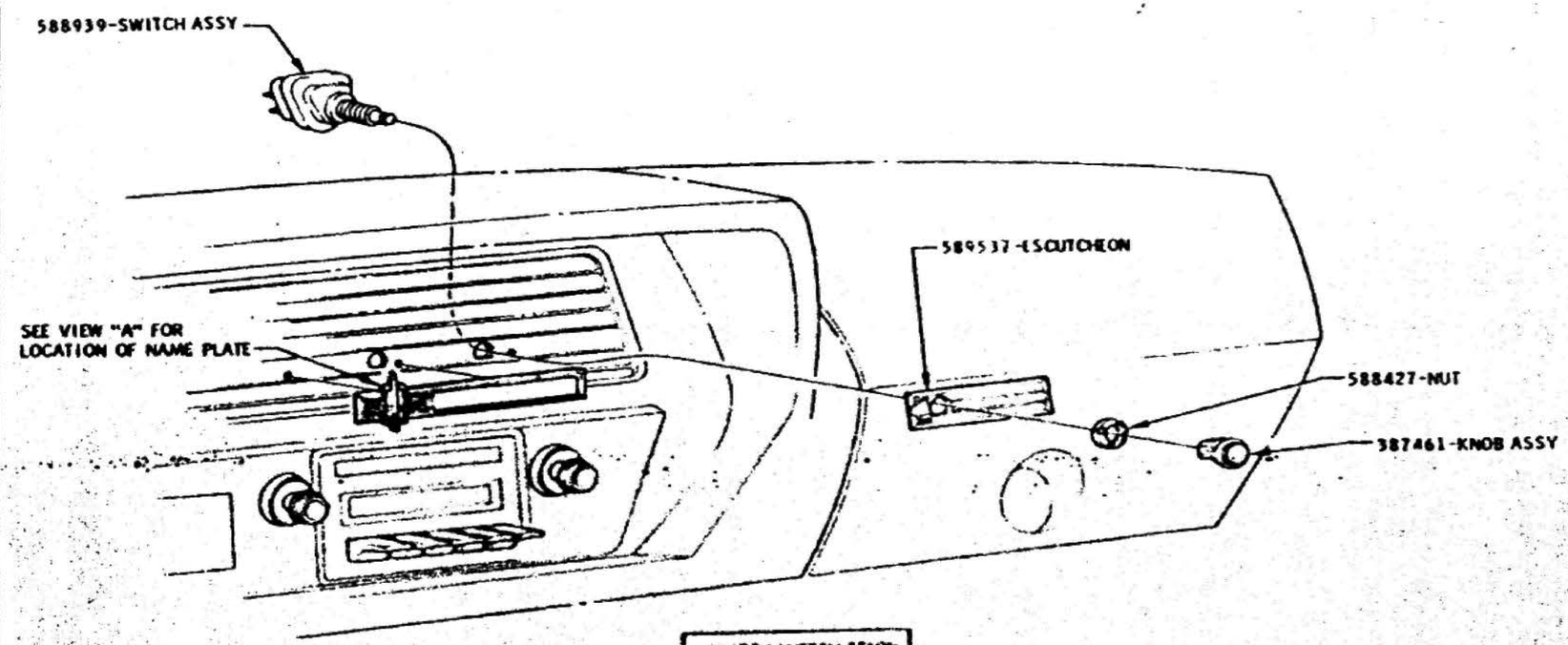

SWITCH INSTALLATION

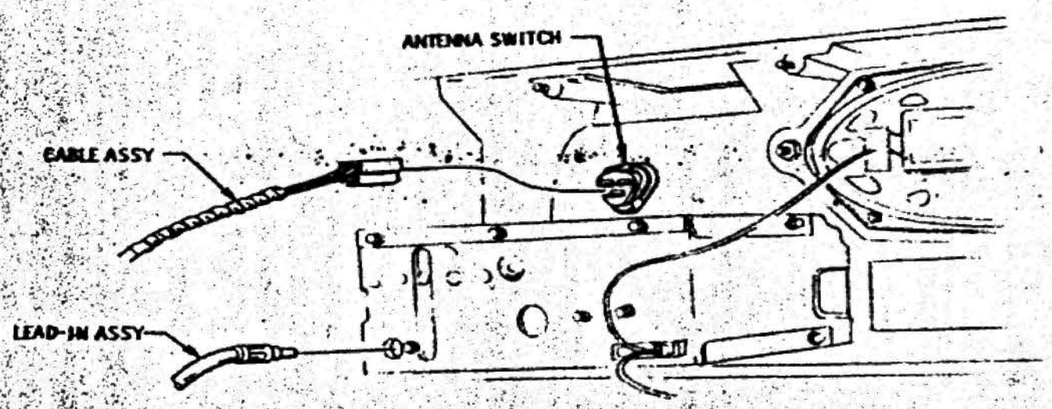

LEAD-IN AND CABLE ASSY HOOK-UP

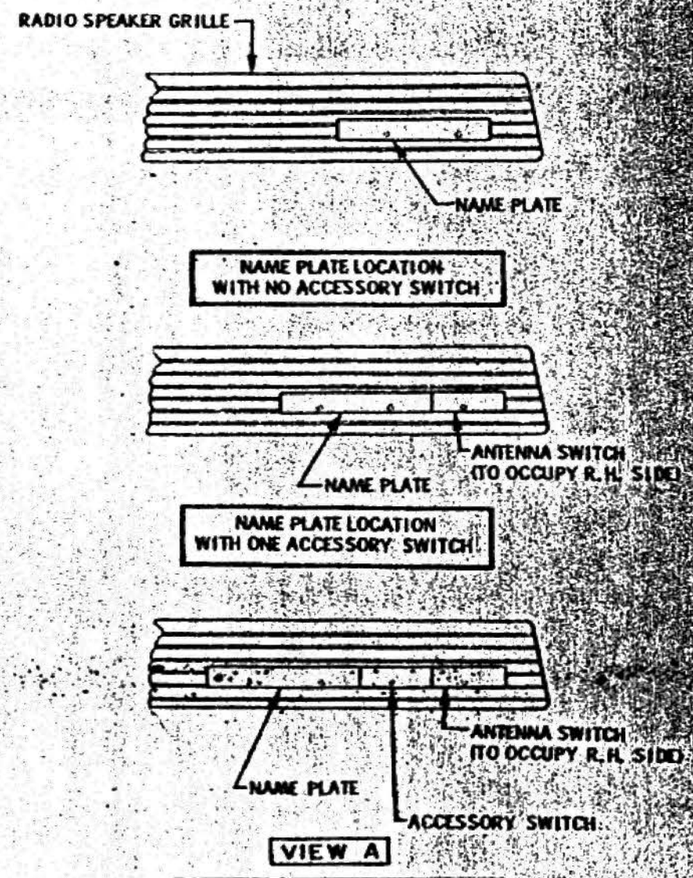

Ⓐ Ⓑ

© NOTE:
DRILL .180 DIA HOLES AT DIMPLES FOR NAME PLATE AND SWITCH INSTALLATIONS PER DRAWING BD-34905.

DATE	SYM	REVISION	DR.	CK.	DATE	SYM	REVISION	DR.	CK.	DATE	SYM	REVISION	DR.	CK.
										7-2-64	C	DRILLING NOTE REVISED	BP	VD
										6-8-64	B	VIEW FROM PAGE 35U-5.3 ADDED	BP	VD
										5-8-64	A	DEALER INFO. REMOVED	BP	VD

INSTALLATION	ELECTRIC ANTENNA		
DATE NOV. 13, 1963	FIRST USED 1965	Oldsmobile Drafting Illustration	PAGE 35U-5.2
DR. BY B. PARKER			
CHECKED H. VAN PELT	SERIES F 85	REF. B-U-75 .40	PART NO. 386346
APPR.			
APPR.			

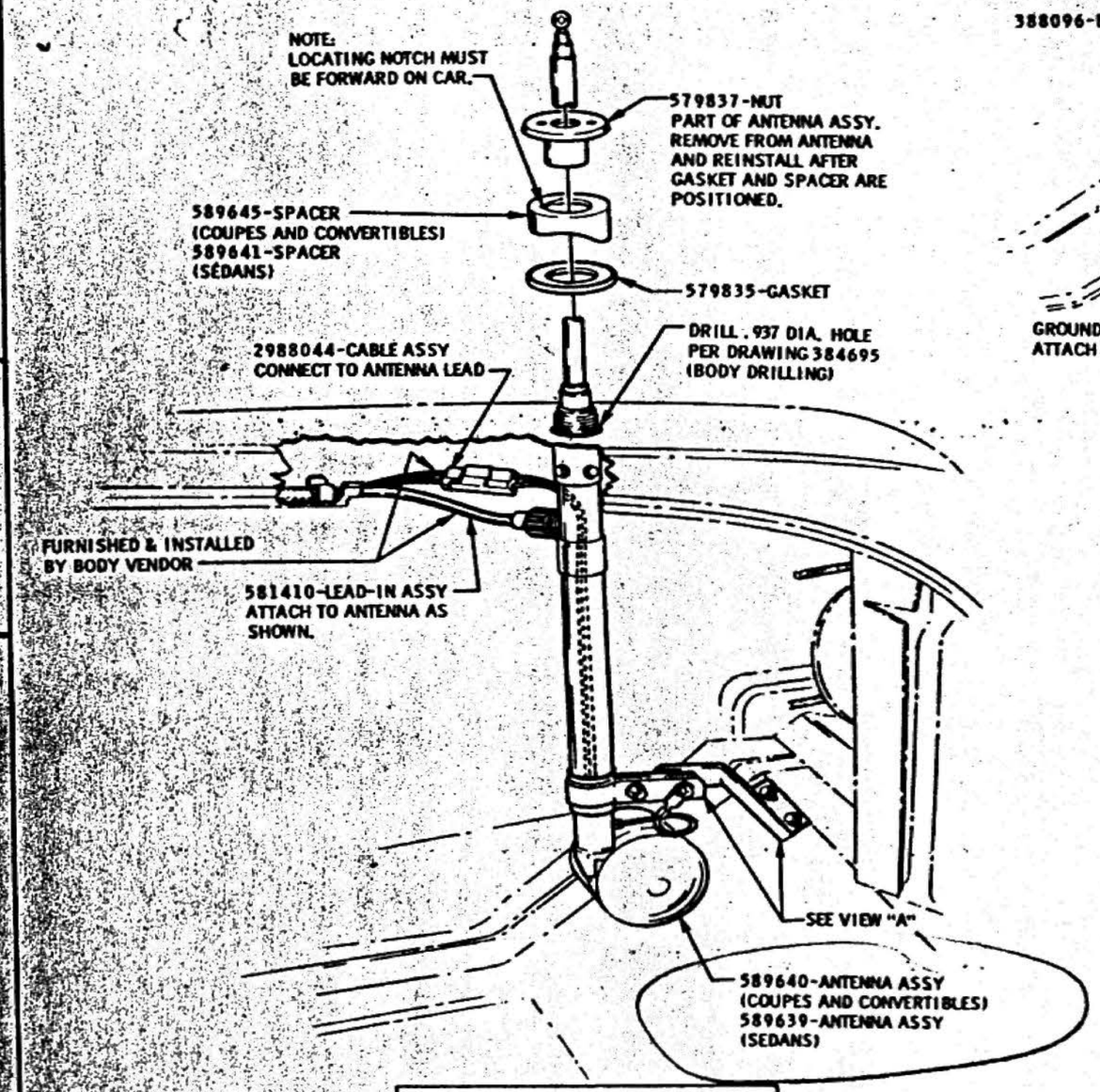

ANTENNA INSTALLATION
(FOR COUPES, SEDANS AND CONVERTIBLES)
(R.H. REAR FENDER LOCATIONS)

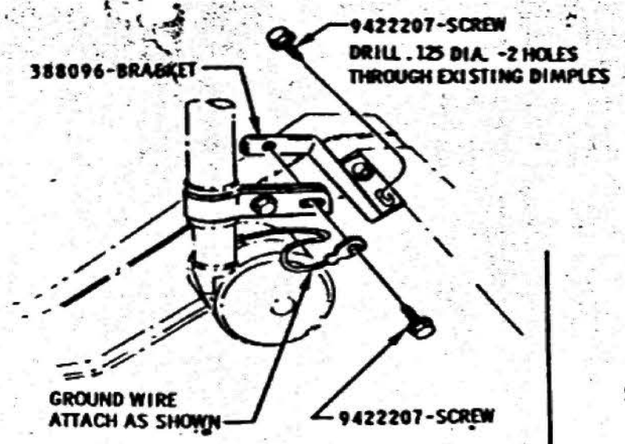

VIEW A

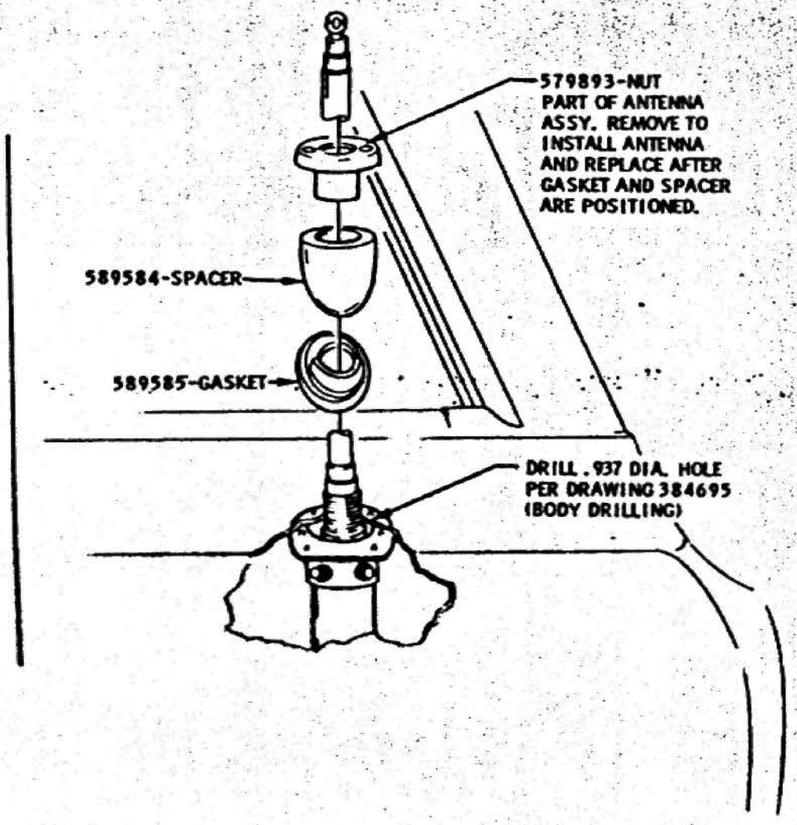

ANTENNA INSTALLATION
FOR STATION WAGONS
(L.H. FENDER LOCATION)

Ⓔ Ⓕ

DATE	SYM	REVISION	DR.	CK.	DATE	SYM	REVISION	DR.	CK.	DATE	SYM	REVISION	DR.	CK.
										5-8-64	F	VIEWS FROM PAGES		
												35U-5.6 & 5.7 ADDED	BP	VP
										5-8-64	E	VIEWS MOVED TO		
												PAGE 35U-5.2	BP	VP

INSTALLATION	ELECTRIC ANTENNA		
DATE NOV. 22, 1963	FIRST USED 1965	Oldsmobile Div. ILLUSTRATION	PAGE 35U-5.3
DR. BY B. PARKER			
CHECKED H. VAN PELT	SERIES F 85	REF. 85U75 80	PART NO. 386346
APPR.			
APPR.			

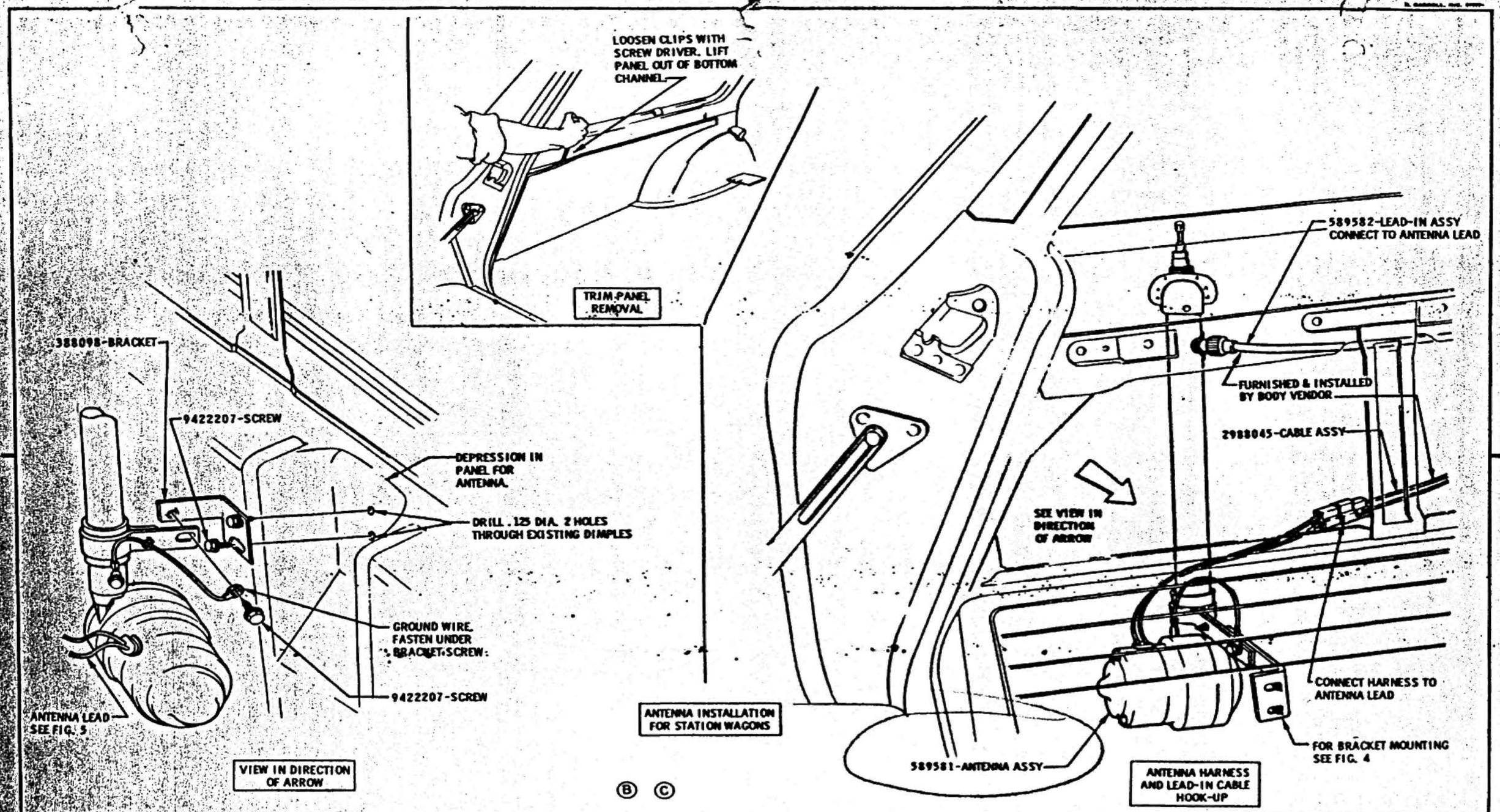

DATE	SYM	REVISION	DR.	CK.	DATE	SYM	REVISION	DR.	CK.	DATE	SYM	REVISION	DR.	CK.
										5-8-64	C	VIEWS FROM PAGE 35U-5.6 ADDED	BP	VP
										5-8-64	B	DEALER INFO REMOVED	BP	VP

INSTALLATION — ELECTRIC ANTENNA

DATE NOV. 8, 1963
DR. BY B. PARKER
CHECKED H. VAN PELT
APPR.
APPR.

FIRST USED 1965 — Oldsmobile Graphic & Illustration — PAGE 35U-5.4

SERIES F 85 — REV. 36U76 80 — PART NO. 386346

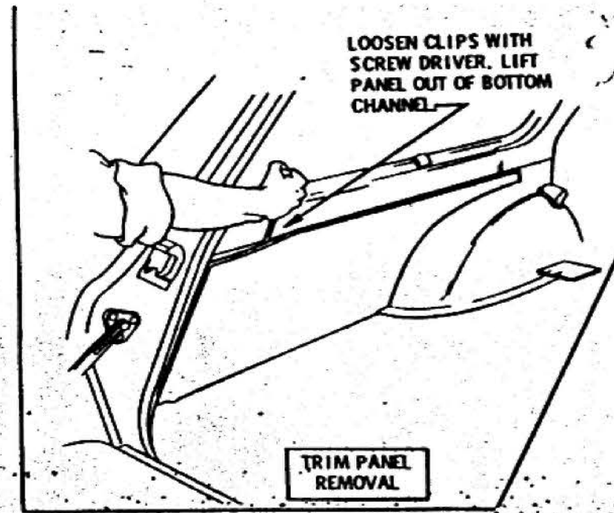

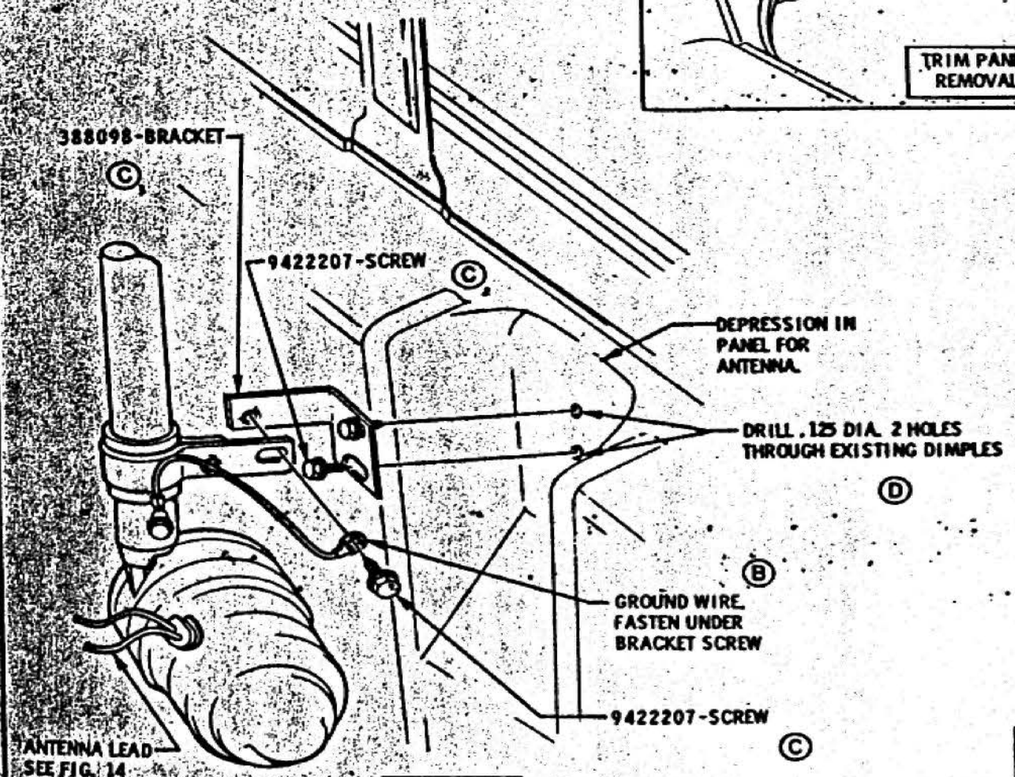

FIGURE 13 (A)

VIEW IN DIRECTION OF ARROW

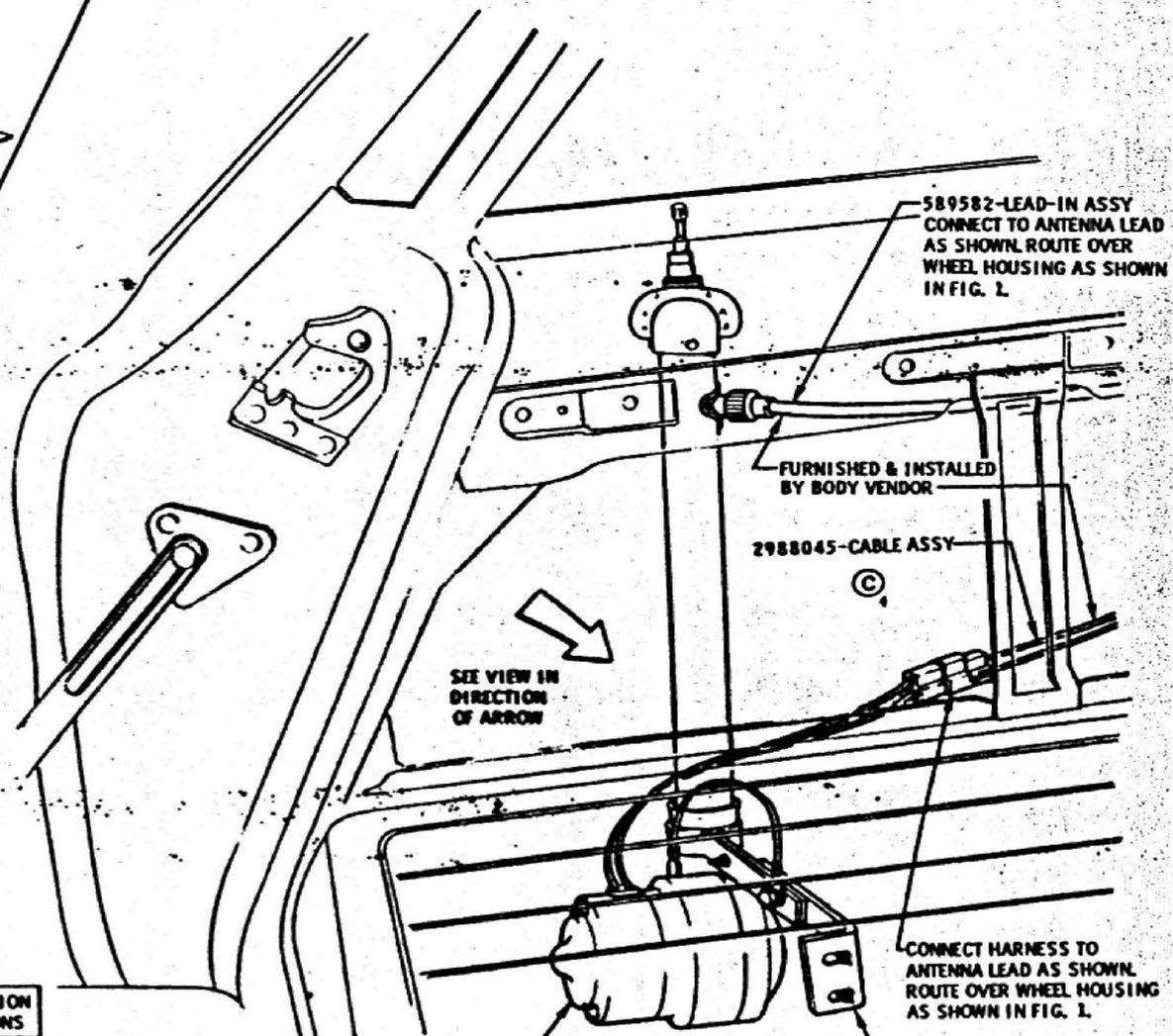

ANTENNA INSTALLATION FOR STATION WAGONS

FIGURE 14 (A)

ANTENNA HARNESS AND LEAD-IN CABLE HOOK-UP

DATE	SYM	REVISION	DR.	CK.	DATE	SYM	REVISION	DR.	CK.	DATE	SYM	REVISION	DR.	CK.
										3-9-64	D	WAS .147 DIA. HOLE		VP
										3-9-64	C	PART NUMBERS REV		VP
										2-27-64	B	GROUND WIRE REROUTED		VP
										11-22-63	A	FIG. NOS. REVISED		VP

INSTALLATION	ELECTRIC ANTENNA		
DATE NOV. 5, 1963	FIRST USED 1965	Oldsmobile Graphic Illustration	PAGE 35U-5.5
DR. BY B. PARKER			
CHECKED H. VAN PELT	SERIES F 85	REF 35U75 80	PART NO. 386346
APPR.			
APPR.			

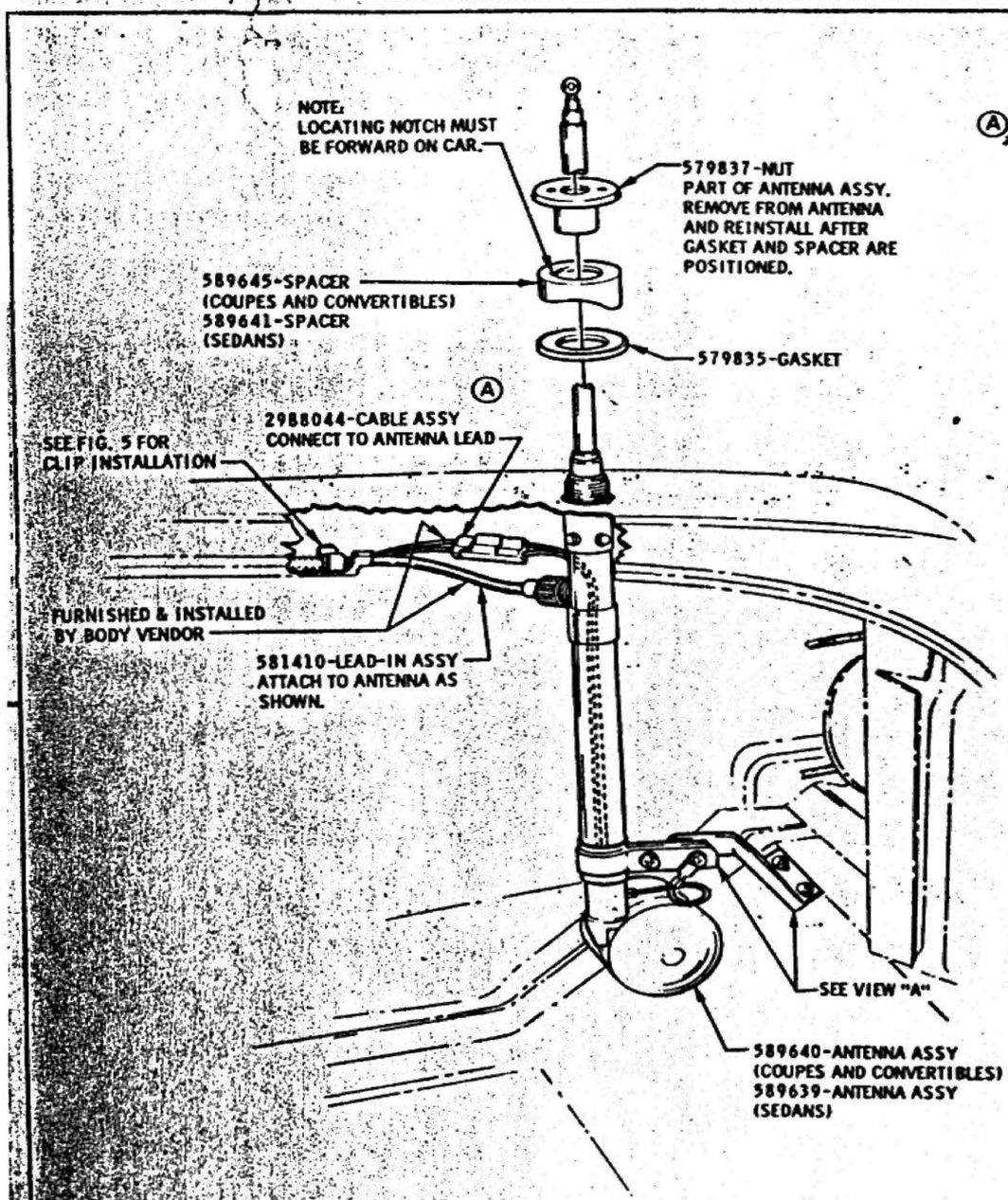

ANTENNA INSTALLATION
(FOR SEDANS AND CONVERTIBLES)
(R. H. REAR FENDER LOCATION)

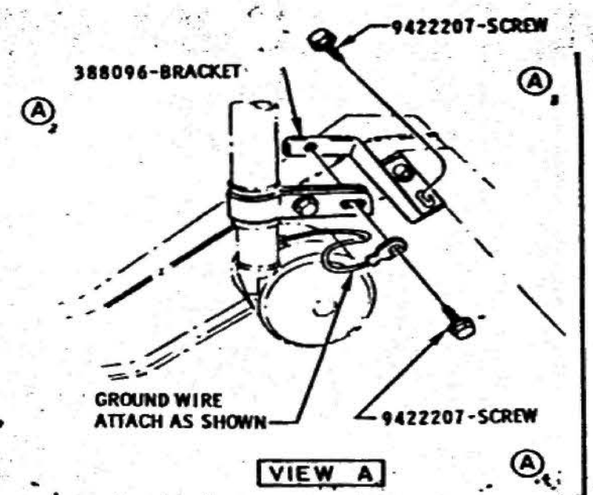

VIEW A

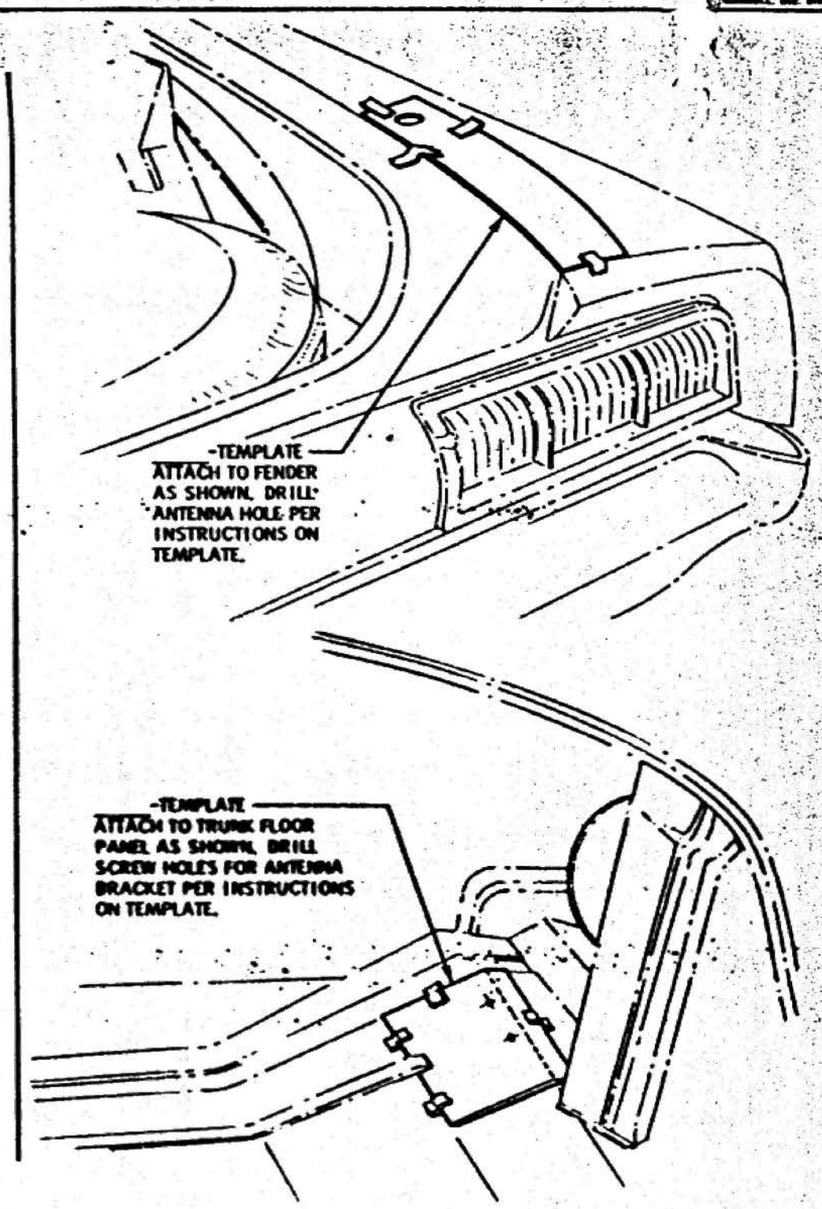

TEMPLATE APPLICATION

DATE	SYM	REVISION	DR.	CK.	DATE	SYM	REVISION	DR.	CK.	DATE	SYM	REVISION	DR.	CK.
										3-6-64	A	PART NO'S ADDED & REV	BR	WP

INSTALLATION	ELECTRIC ANTENNA			
DATE NOV. 5-1968	FIRST USED 1965	Oldsmobile Graphic Illustration	PAGE	35U-5.6
DR. BY R. PARKER				
CHECKED H. VAN PELT	SERIES F 85	REF. 35U 25 80	PART NO.	386346
APPR.				
APPR.				

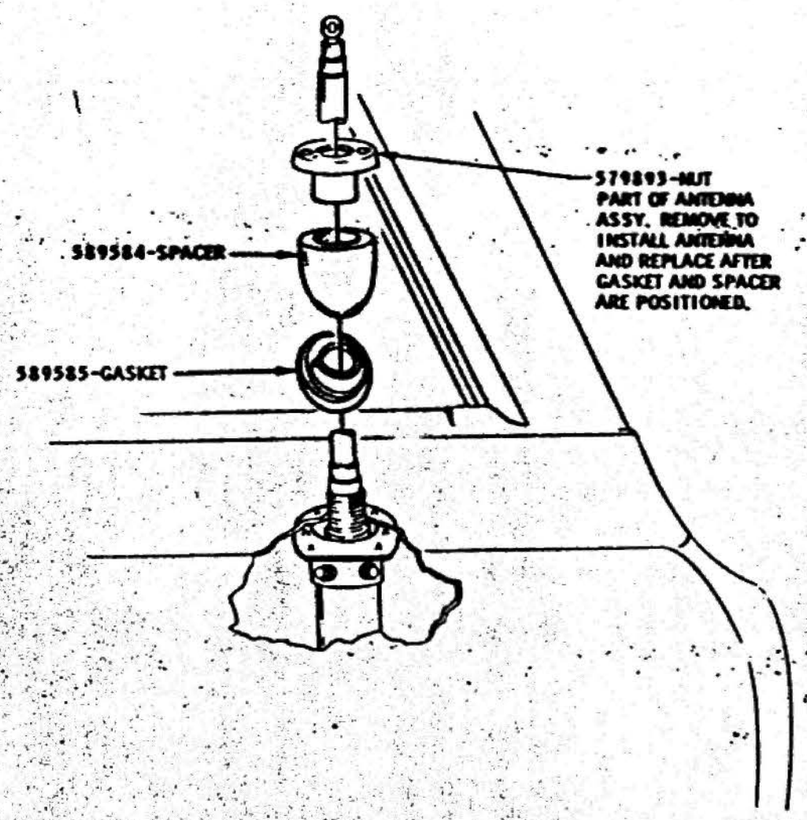

ANTENNA INSTALLATION FOR STATION WAGONS

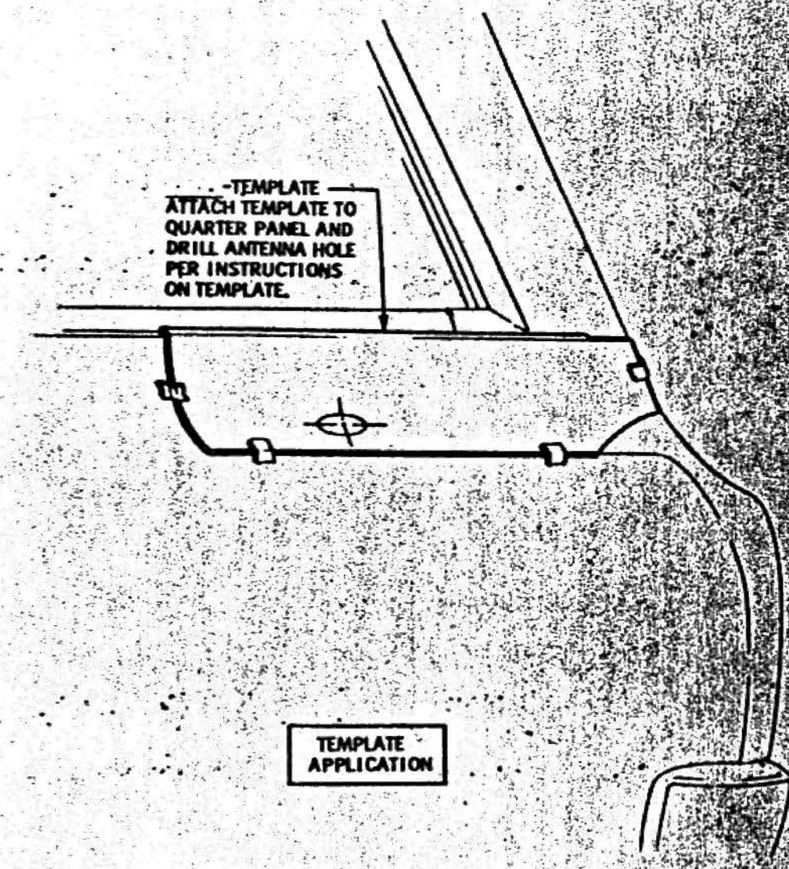

TEMPLATE APPLICATION

DATE	SYM	REVISION	DR	CK	DATE	SYM	REVISION	DR	CK	DATE	SYM	REVISION	DR	CK

INSTALLATION — ELECTRIC ANTENNA

DATE NOV. 5-1968
DR. BY B. PARKER
CHECKED H. VAN PELT
APPR.
APPR.

FIRST USED 1965

Oldsmobile Graphic Illustration

SERIES F 85

REF. 35U75 90

PAGE 35U-5.7

PART NO. 386346