1966 OLDSMOBILE

F-85
Cutlass
4-4-2

ASSEMBLY MANUAL

OLDSMOBILE PRODUCT INFORMATION MANUAL

O - GENERAL

ALPHABETICAL INDEX

	Page No.
Accelerator Pedal	1-2.3
Accelerator Pedal Studs	1-2.1
Air Cleaners - Engine L6	6-2.5
Air Cleaners - Engine V8	6-3.3
Air Injection Reactor System Diagram	6-1.17, 17A, 17B
Air Injection Reactor System V8	6-3.5 thru 9, 12
Air Injection Reactor System L6	6-3.4, 10, 11
Air Conditioning:	
Compressor Mounting V8 (Exc. 35K19)	6-2.7
Compressor Mounting L6	6-2.6
Condenser & Supports (Receiver)	11-2.16, 17
Control Cables and Vacuum Hoses	1-10.14
Control to Instrument Panel	1-6.8
Engine Compartment Wiring	12-2.17, 18
Evaporator, Blower & P.O.A. Valve	1-4.6, 7
Fan & Clutch V8	6-2.1

	Page No.
Air Conditioning: (Continued)	
Fan & Clutch L6	6-2.8
Fan Shroud V8	11-2.1
Fan Shroud L6	11-2.15
Floor Insulators	1-2.2
Heater Assy	1-2.5
Heater Water Hose Routing V8	1-10.15
Heater Water Hose Routing L6	1-10.17
Manifold Assy to Heater	1-2.6
Muffler & Hoses V8	1-10.16
Muffler & Hoses L6	1-10.17
Outlets to Instrument Panel	1-2.7; 1-6.6
Outlet Hoses	1-10.13
Shroud Panel (R.H.)	1-2.7
Tags	0-1.22
Test & Diagnosis	0-1.18, 19, 20, 21

	Page No.
Cable: (Continued)	
Heater Control	1-6.7; 1-10.9
Speedometer	1-10.1, 2
Starter Motor	12-2.1, 7, 13, 15
Capacitor - Volt Reg.	12-2.1
Capacitor - Coil	12-2.5
Cap - Steering Column	9-2.3
Carpet	1-2.3
Chart:	
A/C Procedure	0-1.18, 19
A/C Test Data	0-1.20, 21
Code - Radiator Hose	11-1.3
Cooling System Fill	11-1.2
Engine Appearance	6-1.3, 3A
Engine Conversion	6-1.15, 15A
Engine Identification	6-1.2, 2A
Engine Vacuum Source	6-1.16, 16A, 16B
Exhaust System Usage	8-3.0
Fender Identification	11-1.4, 4A, 4B

	Page No.
Chart: (Continued)	
Front Spring Usage	3-1.2
Fuel Tank Assy	8-2.0
Fuse Panel	12-1.2
Head Lamp Focus	12-1.3, 4
Heater Hose	1-9.6
Knuckle Shop Assembly Code	3-1.5
Modulator Hose Usage	7-1.3
Paint & Trim Specifications	0-1.17 thru 17H
Power Steering Installation & Fill Procedure	9-1.2
Pulley and Belt Data	6-1.4, 4A
Rear Axle Usage	4-1.3, 4, 5; 4-7.1, 2
Rear Spring Usage	4-1.2
Roll Test Procedure	0-1.4
Speedometer Gear	0-1.10, 11, 12
Steering Column Identification	9-1.3
Throttle Adjustment	6-1.14, 14A
Transmission Usage	7-1.4

	Page No.
Chart: (Continued)	
Vehicle Number Plate	0-1.3
Windshield Washer Solution	0-1.6
Clearance:	
Exhaust	8-3.6
Sheet Metal	11-6.1
Clock Installation	1-6.3
Clock Wiring	12-2.8, 9
Closed Circuit Crankcase Ventilation (L6)	6-2.9
Closed Circuit Crankcase Ventilation (V8)	6-3.3
Clutch Control	7-2.1, 1A
Coil (L6)	6-2.6, 13
Coil (V8)	12-2.5
Compressor Mounting A/C (L6)	6-2.6
Compressor Mounting A/C (V8)	6-2.7; 6-3.7
Condenser A/C (L6)	11-2.16
Condenser A/C (V8)	11-2.17

	Page No.
Console:	
Automatic Floor Shift	7-3.4
Automatic Shift	1-2.24 thru 28
Automatic Shift Carpet	1-2.29
Synchromesh Shift	1-2.20, 21, 22, 23
Vacuum Hose Routing	1-10.6
Wiring	12-2.31, 32
Cooling System Fill Chart	11-1.2
Courtesy Lamps	12-2.27
Cover - Shroud Side	1-2.3
Cover - Spare Wheel	10-2.3
Cruise Control:	
Control to Instrument Panel	1-6.10
Hose and Cable Routing (L6)	1-10.25
Hose and Cable Routing (V8)	1-10.26, 27
Hose Diagram	1-9.7, 8
Regulator Mounting	11-2.21
Servo Mounting (L6)	6-2.18
Servo Mounting (V8)	1-4.9

	Page No.
Cruise Control: (Continued)	
Tag	0-1.22
Dash Panel Sealing	1-4.3
Dashpot	6-2.17
Defroster Outlet	1-2.5A
Diagram:	
A/C Vacuum Hose & Control Cable V8	1-9.3
A/C Vacuum Hose & Control Cable L6	1-9.4
Air Injection Reactor System V8	6-1.17, 17A
Air Injection Reactor System L6	6-1.17B
Cruise Control Vacuum Hose V8	1-9.7
Cruise Control Vacuum Hose L6	1-9.8
Drilling	0-1.13 thru 13D
Dimmer Switch	1-2.1
Door Edge Guards	11-3.1
Drilling - Dash Panel	0-1.13, 13A
Drilling - Miscellaneous	0-1.13B thru 13D
Electric Antenna & Rear Window Wiring	12-2.29

	Page No.
Electrical:	
A/C Wire Routing	12-2.17, 18
Ash Tray Lamp	12-2.9
Back-Up Lamp Wiring	12-2.21 thru 25
Battery Cable	12-2.2, 15
Battery Hold-Down	12-2.2
Coil	12-2.5; 6-2.13
Console - SM & FS	12-2.31, 2
Control Panel Wiring	12-2.8
Courtesy Lamps	12-2.27
Cruise Control	12-2.33
Dimmer Switch & Wiring	1-2.1; 12-2.9
Engine Wiring Harness (L6)	12-2.15, 16
Engine Wiring Harness (V8)	12-2.5, 6
Filler Plate Wiring	12-2.1, 14
Flasher Wiring	12-2.8
Fuel Tank Wiring	12-2.10, 11
Generator Wiring	12-2.6, 16
Glove Box Lamp	12-2.28; 1-6.13

	Page No.
Electrical: (Continued)	
Ground Strap	12-2.2, 5
Headlamp Wiring	12-2.4
Junction Block Wiring	12-2.1, 14
License Lamp Wiring	12-2.12
Neutral Safety Switch & Wiring	12-2.9
Oil Pressure Switch & Wiring	12-2.6, 15
Parking Brake Lamp & Wiring	12-2.7
Power Top Harness	12-2.30
Rear Speaker Cable Fastening	12-2.30
Regulator & Wiring	12-2.1, 14
Spark Plug Cables	6-2.13, 12-2.5
Starter Cable Routing	12-2.13
Stop Lamp Switch & Wiring	12-2.9
Tachometer & Wire Routing	1-6.6; 12-2.20
Trunk Lamp & Wiring	12-2.26
Turn Signal Switch & Wiring	12-2.4, 9
Water Temp. Switch & Wiring	12-2.6, 16
Wiper Motor Wiring	12-2.3, 8

	Page No.
Emblem & Screen to Support Assy	11-2.3
Engine:	
Air Cleaner	6-2.5; 6-3.3
A/C Compressor & Brackets	6-2.6, 7
Appearance Chart	6-1.3, 3A
Carburetor (L6)	6-2.5
Coil & Spark Plug Cables (L6)	6-2.13
Connectors (V8)	6-2.15
Conversion Chart	6-1.15, 15A
Crankcase Ventilation	6-2.9; 6-3.3, 4
Cruise Control Servo Mounting (L6)	6-2.18
Dashpot (V8)	6-2.17
Dipstick & Tube (L6)	6-2.3
Dipstick (V8)	6-2.19
Fan	6-2.1, 8
Fuel Pump & Lines (L6)	6-2.9
Generator	6-2.3, 4, 14
Identification Chart	6-1.2, 2A
Oil Filter (L6)	6-2.9

	Page No.
Engine: (Continued)	
Oil Sending Unit	6-2.3, 12-2.6
Powerplant to Frame	6-3.1, 2
Power Steering Pump & Brackets	6-2.2, 10
Pulley & Belt Chart	6-1.4, 4A
Pulley & Belt Diagram	6-1.5 thru 13
Starter	6-2.3
Throttle Adjustment Chart	6-1.14, 14A
Throttle Control	1-4.8, 6-2.12
Vacuum Fittings (L6)	6-2.16
Vacuum Line to Distributor (L6)	6-2.9
Vacuum Source Diagram (V8)	6-1.16, 16A, 16B
Water Temperature Switch	6-2.3, 12-2.6
Water Valves (V8)	6-2.15
Exhaust System	8-3.1 thru 5
Exhaust System Chart	8-3.0
Exhaust System Clearance	8-3.6
Fan & Pulley - V8	6-2.1
Fan & Pulley - V6	6-2.8

	Page No.
Fender I.D. Chart	11-1.4, 4A, 4B
Fender Installation	11-2.12, 13
Floor Carpet	1-2.3
Front Fender Moulding	11-2.7, 8
Front Floor Cover-Shipping	1-8.1
Front & Rear Wheel Trim Heights Layout	0-1.7
Front Spring Usage Chart	3-1.2
Front Suspension	3-2.1, 2, 3
Fuel Filler Door	14-3.3
Fuel Instruction Tag	0-1.22
Fuel System	8-2.1
Fuel Tank Assembly	8-2.0
Fuse Panel Chart	12-1.2
Gear - Steering	9-2.1
Generator Mounting - V8	6-2.4
Generator Mounting - L6	6-2.3
Generator Wiring - V8	12-2.13
Generator Wiring - L6	12-2.16
Glove Box Door	1-6.12

	Page No.
Glove Box Lamp & Switch	1-6.13
Glove Box Wiring	12-2.28
Grille - Windshield Upper Shroud	1-4.1
Grille - Radiator	11-2.2
Grille - Radiator - 442	11-2.3
Grommets	1-4.4
Hood Assy - Complete	11-5.1
Headlamps & Doors	11-2.4
Headlamp Focus Chart	12-1.3, 4
Heater: (1A2C)	
Blower	1-4.5
Cable & Water Hose Diagram	1-9.2
Control (Inside of Car)	1-6.7; 1-10.9
Hole Cover	1-4.4
Hose Chart	1-9.6
Standard (Inside Car)	1-2.4
Water Hose Routing	1-10.10, 18
Hose - Radiator Code Chart	11-1.3
Horns	11-2.21

	Page No.
Horn Wiring	12-2.2
Hub Cap (Stowage)	0-1.25
IBM Accessory Codes	0-1.27, 28
Insulators:	
Inside of Car	1-2.1, 2
Hood	11-5.1
Instrument Panel:	
Accessory Controls & Switches	1-6.2, 5, 10, 13
Ashtray	1-6.10
Ash Tray Lamp	12-2.9
Clock & Covers	1-6.3
Cluster & Pad	1-6.1
Glove Box Assy & Door	1-6.11, 12
Glove Box Lamp	1-6.13, 12-2.28
Radio & Speaker	1-6.4
Supports to Body	1-6.9
Tachometer	1-6.6
Junction Block	11-2.21
Key-Door & Ignition, Glove Box & Trunk	0-1.22
Knuckle Shop Assembly Code Chart	3-1.5

	Part No.
Labels, Tags & Loose Parts	0-1.22 thru 25
Luggage Carrier	1-8.8, 9, 12
License Plate Parts	0-1.22
Mirror:	
Inside Rearview	1-2.15
Outside Rearview (Std.)	1-8.2
Outside Rearview (Remote Control)	1-8.3
Modulator Hose Usage Chart	7-1.3
Modulator Pipes & Hoses	7-3.5, 6
Mouldings:	
Door Edge Guard	11-3.1
Front Fender	11-2.8, 13
Hood	11-5.1
Rocker Panel	11-2.7
Wheel Opening	11-2.7
Neutral Safety Switch	9-2.4
Owners Protection Manual & Plate	0-1.2, 22
Oil Cooler Pipes	7-3.3
Paint & Trim Specifications Chart	0-1.17 thru 17H

	Part No.
Parking Brake Wiring	12-2.7
Pipes - Brake	5-2.1, 2
Pipes - Exhaust	8-3.1, 2, 3, 4, 5, 6
Pipes - Fuel	8-2.1, 2, 3
Plugs - Water & Vacuum V8	6-2.15
Plugs - Vacuum Fittings L6	6-2.16
Power Top Guide Book	0-1.22
Power Top Harness	12-2.30
Power Plant to Frame V8	6-3.1
Power Plant to Frame L6	6-3.2
Power Steering Installation & Fill Procedure	9-1.2
Power Steering Pump V8	6-2.2
Power Steering Pump L6	6-2.10
Propeller Shaft	4-2.1
Protect-O-Plate	0-1.2
Pulley & Belt Chart V8	6-1.4
Pulley & Belt Chart L6	6-1.4A
Pulley & Belt Diagram	6-1.5 thru 6-1.14

	Page No.
Radiator-Cooling System Fill Chart	11-1.2
Radiator Hose Clamps & Cap	11-2.20
Radiator Hose Chart	11-1.3
Radiator Support Assy-Hood Latch & Bumpers	11-2.1
Radiator to Upper & Lower Supports	11-2.5, 6
Radiator Support Seals	11-2.10
Radio to Instrument Panel	1-6.4
Radio Support	1-6.9
Rear Spring Chart	4-1.2
Rear Axle Chart	4-1.3, 4, 5; 4-7.1, 2
Rear Seat Speaker	1-8.10, 11
Rear Suspension	4-2.2
Retail Price Label	0-1.24
Rocker Panel Access Hole Plug	1-8.13
Rocker Panel Moulding	11-2.7
Roll Test Procedure Chart	0-1.4
Script, Ornament & Emblem	11-2.19
Sealing - Front of Dash	1-4.3

	Page No.
Seals & Support Mounting	11-2.9
Sheet Metal	11-2.1 thru 21
Sheet Metal Clearance	11-6.1
Shift Indicator - Steering Column	9-2.2
Shift Control - 3 Speed Column	7-2.2, 3
Shift Control - 3 Speed & Floor Shift Levers	7-2.4
Shift Control - 4 Speed Floor Shift	7-2.5
Shift Control - Automatic - Column	7-3.1
Shift Control - Automatic - Console	7-3.4
Shift Lever - Column	9-2.3
Shift Lever - Column - Tilt-Away	9-2.4
Shroud Panels	1-2.3
Shroud Installation-Upper & Lower Supports	11-2.14, 15
Sill Plates - Door	1-2.3
Spark Plug Cable Routing V8	12-2.5
Spark Plug Cable Routing V6	6-2.13
Spare Wheel & Jack Stowage	10-2.1, 2, 3
Spare Wheel Lock	10-2.4

	Page No.
Speaker - Radio	1-6.4
Speaker - Rear Seat	1-8.10
Speaker - Rear Seat - Station Wagon	1-8.11
Speedometer Cable Routing	1-10.1, 2
Speedometer Gear Chart	0-1.10, 11, 12
Spring Chart	3-1.2
Stabilizer Front	3-2.2, 3
Stabilizer Rear	4-2.3
Starter Motor L6	6-2.3
Steering Column Chart	9-1.3
Steering Column Installation	9-2.2, 9-2.4
Steering Column Tape Identification Chart	9-1.3
Steering Column Tilt-Away	9-2.4
Steering Column Switches	9-2.4, 7
Steering Gear & Hoses	9-2.5, 6
Steering Linkage	3-2.1
Steering Wheel - Deluxe	9-2.1
Superlift Shock Absorbers	1-10.19 thru 24
Support Assy-Grille & Stone Shield	11-2.2

	Page No.
Suspension - Front	3-2.2, 3
Suspension - Rear	4-2.2, 3
Switch - Brake	5-2.4, 5
Switch - Parking Brake	5-2.6
Switch - Power Top	1-6.5
Tachometer Wiring	12-2.31
Tags	0-1.22, 23
Throttle Adjustment (V8)	6-1.14
Throttle Adjustment (L6)	6-1.14A
Throttle Control (V8)	1-4.8
Throttle Control (L6)	1-2.8, 6-2.12
Tilt Steering Wheel	9-2.4
Transmission - Automatic	7-3.2, 4
Transmission - Cooler Pipes	7-3.3
Transmission-Modulator Hose Usage Chart	7-1.3
Transmission-Modulator Pipes & Hoses V8	7-3.5
Transmission-Modulator Pipe L6	7-3.6
Transmission Usage Chart	7-1.4
Trim Pad - Instrument Panel	1-6.1

	Page No.
Trunk Lamp	12-2.26
Trunk Latch Hose Diagram	1-9.5
Trunk Latch Switch	1-6.13
Trunk Latch Switch Hose Routing	1-10.3
Trunk Latch Vacuum Tank & Hoses V8	1-10.4
Trunk Latch Vacuum Tank & Hoses L6 (Exc. A/C)	1-10.4A
Trunk Latch Vacuum Tank & Hoses L6 (A/C)	1-10.5
Turn Signal Lever	9-2.3
Turn Signal Wiring	12-2.9
Vacuum Gage Hose Routing (Engine Compt.)	1-10.6
Vacuum Gage (Inside of Car)	1-2.22
Vacuum Source Diagram V8	6-1.16, 16A, 16B
Vacuum Source L6	6-2.16
Valve Extension	0-1.22
Vehicle Number Plate Chart	0-1.3, 0-1.5
Visor Vanity Mirror	1-2.16
Wiring (See Electrical)	
Water Pump V8	6-2.1
Water Temperature Switch V8	12-2.6
Water Temperature Switch L6	6-2.3
Water Pump Cap (35C48)	6-2.15
Water Valves & Plugs V8	6-2.15
Water Valves & Plugs L6	6-2.9
Wheel Disc	10-2.5, 5A
Wheel Assy & Ornament	10-2.6
Wheel Trim Heights	0-1.7
Windshield Washer Solution Chart	0-1.6
Windshield Washer Solvent Bottle	11-2.21
Windshield Washer Hoses	1-10.7
Windshield Wiper Motors & Arms	1-4.1, 2

ALPHABETICAL INDEX

	Page No.
Power Top Harness	12-2.30
Power Plant to Frame V8	6-3.1
Power Plant to Frame L6	6-3.2
Power Steering Pump V8	6-2.2
Power Steering Pump L6	6-2.10
Propeller Shaft	4-2.1
Protect-O-Plate	0-1.2
Pulley & Belt Chart V8	6-1.4
Pulley & Belt Chart L6	6-1.4A
Pulley & Belt Diagram	6-1.5 thru 6-1. 14
Radiator - Cooling System Fill Chart	11-1.2
Radio to I.P.	1-6.4
Rear Spring Chart	4-1.2
Rear Axle Chart	4-1.3
Rear Suspension	4-2.2
Retail Price Label	0-1.24
Sealing - Front of Dash	1-4.3
Sheet Metal	11-2.1
Sheet Metal Clearance	11-6.1
Shift Indicator - Steering Column	9-2.2

ALPHABETICAL INDEX

	Page No.
Shift Control - 3 Speed Column	7-2.2
Shift Control - 3 Speed & Floor Shift Levers	7-2.4
Shift Control - 4 Speed Floor Shift	7-2.5
Shift Control - Automatic - Column	7-3.1
Shift Control - Automatic - Console	7-3.4
Shift Lever - Column	9-2.3
Shift Lever - Column - Tilt-Away	9-2.4
Shroud Panels	1-2.3
Sill Plates - Door	1-2.3
Speaker - Radio	1-6.4
Speaker - Rear Seat	1-8.10
Speaker - Rear Seat - Station Wagon	1-8.11
Speedometer Cable Routing	1-10.1, 2
Spring Chart	3-1.2
Spark Plug Cable Routing V8	12-2.5
Spark Plug Cable Routing V6	6-2.13
Spare Wheel Stowage	10-2.1, 2, 3
Stabilizer Front	3-2.2, 3
Stabilizer Rear	4-2.3
Starter Motor L6	6-2.3

ALPHABETICAL INDEX

	Page No.
Steering Linkage	3-2.1
Suspension - Front	3-2.2, 3
Suspension - Rear	4-2.2, 3
Steering Column Chart	9-1.3
Steering Wheel-Deluxe	9-2.1
Steering Column Installation	9-2.2, 9-2.4
Steering Gear	9-2.5, 6
Steering Column - Tilt-Away	9-2.4
Steering Column Switches	9-2.4
Switch - Power Top	1-6.5
Switch - Brake	5-2.4, 5
Switch - Parking Brake	5-2.6
Superlift Shock Absorbers	1-10.9 thru 24
Tachometer Wiring	12-2.31
Tags	0-1.22, 23
Throttle Control V8	1-4.8
Throttle Control L6	6-2.12
Throttle Adjustment V8	6-1.14
Throttle Adjustment L6	6-1.14A
Tilt Steering Wheel	9-2.4

ALPHABETICAL INDEX

	Page No.
Turn Signal Lever	9-2.3
Turn Signal Wiring	12-2.9
Transmission - Automatic	7-3.2
Transmission - Cooler Pipes	7-3.3
Transmission - Modulator Pipes & Hoses V8	7-3.5
Transmission - Modulator Pipe L6	7-3.6
Transmission - Modulator Hose Usage Chart	7-1.3
Transmission Usage Chart	7-1.4
Trim Pad - Instrument Panel	1-6.1
Trunk Lamp	12-2.26
Trunk Latch Switch	1-10.3
Trunk Latch Vacuum Tank & Hoses V8	1-10.4
Trunk Latch Vacuum Tank & Hoses L6 (Exc. A/C)	1-10.4A
Trunk Latch Vacuum Tank & Hoses L6 (A/C)	1-10.5
Vacuum Gage Hose Routing (Engine Compt.)	1-10.6
Vacuum Gage (Inside of Car)	1-2.22
Vacuum Source Diagram V8	6-1.16, 16A, 16B
Vacuum Source L6	6-2.16
Vehicle Number Plate	0-1.5
Visor Vanity Mirror	1-2.16

ALPHABETICAL INDEX

	Page No.
Wiring (See Electrical)	
Water Pump V8	6-2.1
Water Valves & Plugs V8	6-2.15
Water Valves & Plugs L6	6-2.9
Water Temperature Switch V8	12-2.6
Water Temperature Switch L6	6-2.3
Wheel Disc	10-2.5
Wheel Assy & Ornament	10-2.6
Wheel Trim Heights	0-1.7
Windshield Washer Solution	0-1.6
Windshield Washer Solvent Bottle	11-2.21
Windshield Washer Hoses	1-10.7
Windshield Wiper Motors & Arms	1-4.1, 2

GROUP 0 - GENERAL

392349	PROTECT-O-PLATE	0-1.2
392173	CHART-VEHICLE NUMBER PLATE	0-1.3
392398	CHART-ROLL TEST PROCEDURE	0-1.4
	VEHICLE NUMBER PLATE	0-1.5
392076	CHART-WINDSHIELD WASHER SOLUTION	0-1.6
391960	LAYOUT-FRONT & REAR WHEEL ALIGNMENT & TRIM HEIGHTS	0-1.7
		0-1.8
		0-1.9
392593	CHART-SPEEDOMETER GEAR (SHEET 1)	0-1.10
392593	CHART-SPEEDOMETER GEAR (SHEET 2)	0-1.11
392593	CHART-SPEEDOMETER GEAR (SHEET 3)	0-1.12
393381	LAYOUT-DRILLING (DASH PANEL) (SHEET 1)	0-1.13
393381	LAYOUT-DRILLING (DASH PANEL) (SHEET 2)	0-1.13A
393381	LAYOUT-DRILLING (MISCELLANEOUS) (SHEET 3)	0-1.13B
393381	LAYOUT-DRILLING (MISCELLANEOUS) (SHEET 4)	0-1.13C
393381	LAYOUT-DRILLING (MISCELLANEOUS) (SHEET 5)	0-1.13D
		0-1.14
		0-1.15
	CHART-TEMPLATE	0-1.16
393186	CHART-PAINT AND TRIM SPECIFICATIONS (9 SHEETS)	0-1.17

392393	CHART-AIR CONDITIONING PROCEDURE (SHEET 1)	0-1. 18
392393	CHART-AIR CONDITIONING PROCEDURE (SHEET 2)	0-1. 19
392541	CHART-AIR CONDITIONING TEST DATA (V8 ONLY) (SHEET 1)	0-1. 20
392541	CHART-AIR CONDITIONING TEST DATA (L6 ONLY) (SHEET 2)	0-1. 21
	LABELS, TAGS, & LOOSE PARTS	0-1. 22
		0-1. 23
	LABELS, TAGS, & LOOSE PARTS	0-1. 24
	LABELS, TAGS, & LOOSE PARTS	0-1. 25
	ENGINEERING U. P. C. LIST	0-1. 26
	I. B. M. ACCESSORY CODES	0-1. 27
	I. B. M. ACCESSORY CODES	0-1. 28

BUILD DATE CODE LETTERS

JAN.	H	JULY	A
FEB.	B	AUG.	D
MAR.	M	SEPT.	U
APR.	E	OCT.	F
MAY	J	NOV.	Q
JUNE	G	DEC.	C

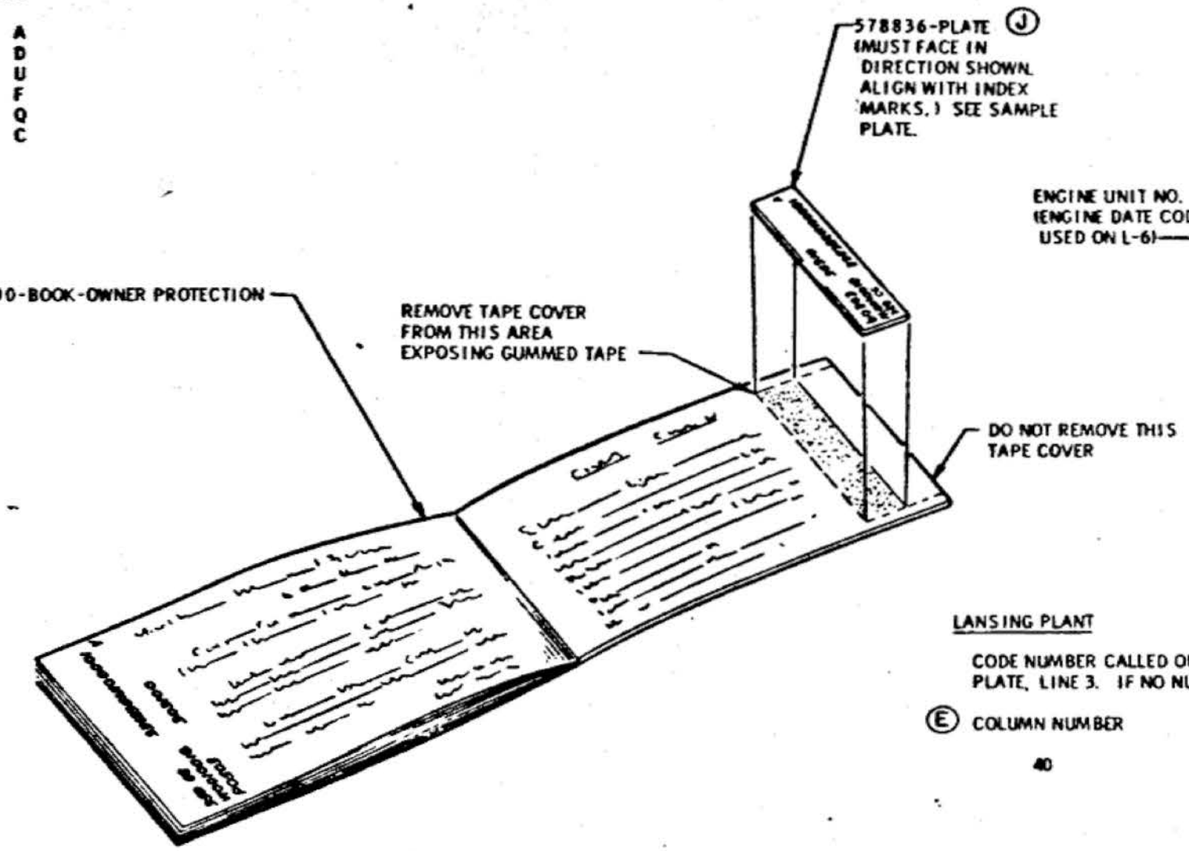

TOP COLOR CODE FOR CONVT. OR C08 VINYL TOP (G)

1 - WHITE
2 - BLACK
4 - BLUE
6 - BEIGE

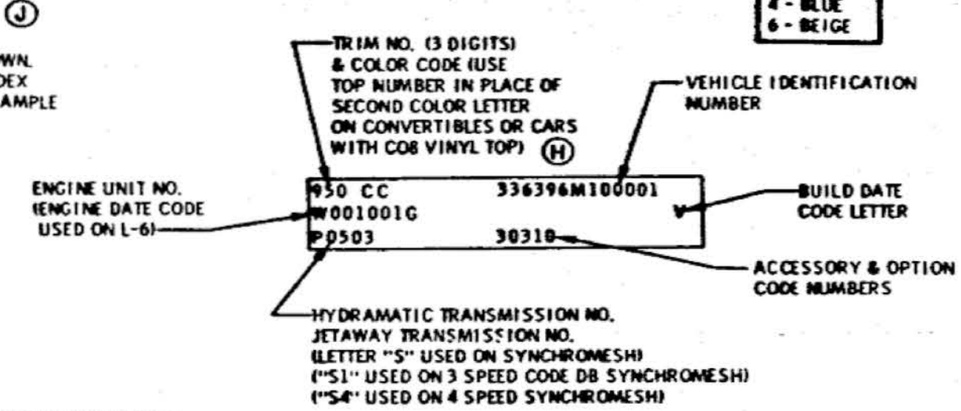

SAMPLE PLATE

LANSING PLANT

CODE NUMBER CALLED OUT ON BROADCAST FORM 522 FOR LISTED COLUMNS SHOULD BE COPIED ON PLATE, LINE 3. IF NO NUMBER APPEARS, A ZERO "0" MUST BE USED, FIVE (5) DIGITS MANDATORY: (F)

(E) COLUMN NUMBER	ACCESSORY	OPTION CODE	CODE STAMPED
40	POWER STEERING	N40	1
	POWER BRAKE	J50	2
	T & T STEERING	N37	4
	ADD CODE # FOR COMBINATIONS:	J50 & N37	6
41	CRUISE CONTROL	K30	1
46	DELUXE RADIO	U63	1
	SUPER DELUXE RADIO	U65	2
	AM-FM RADIO	U69	3
62	AIR CONDITIONER	C60	1
	COMFORTRON	C61	2
	HEAVY DUTY ENGINE COOLING	Y76	4
66	ELECTRIC 4 WINDOW LIFTS	A31	1
	VACUUM DOOR LOCKS	A93	4
		A31 & A93	5

AFTER REMOVAL OF TAPE COVER ON INSIDE FACE OF REAR COVER OF BOOKLET, INSTALL PROTECT-O-PLATE WITH RAISED TYPE FACING UP.

SERIAL NUMBER ON PLATE MUST CORRESPOND TO SERIAL NUMBER ON CAR IN WHICH OWNER PROTECTION POLICY IS PLACED.

AFTER PLATE IS INSTALLED, FACTORY MUST USE ADDRESSOGRAPH IMPRINTING MACHINE (CLASS 500) TO PROOF PRINT PLATE ON THE OPPOSITE PAGE CONTAINING OLDSMOBILE SERVICE MESSAGE.

G. M. ASSEMBLY PLANTS

OPTION CODES FOR ACCESSORIES AND OPTIONS, LIST ONLY ACCESSORIES INSTALLED ON LINE 3.

OPTION CODE	ACCESSORY
N40	POWER STEERING
J50	POWER BRAKES
C60 OR C61	AIR CONDITIONING
A31	POWER WINDOWS
K30	CRUISE CONTROL
U63, U65, U69	RADIO

OWNERS PROTECTION POLICY

DATE	SYM	REVISION	DR.	CK.	DATE	SYM	REVISION	DR.	CK.	DATE	SYM	REVISION	DR.	CK.
					4-5-66	H	NOTE REVISED	KL						
					4-5-66	G	CHART ADDED	KL		7-7-65	D	CODE LETTERS REVISED	GC	JG
					[illegible]	F	WAS SIX (6) DIGITS	JJ	JA	5-4-65	C	PLATE FORMAT REVISED		JA
					[illegible]	E	ACCESSORY & OPTION			4-7-65	B	WAS 3BT358	JJ	JA
4-6-66	J	PLATE REVISED	KL				CODES REVISED	JJ	JA	3-25-65	A	NOTE REVISED	GG	JA

INSTALLATION PROTECT-O-PLATE
DATE FEB. 15, 1965
DR. BY C. K. McNAMARA
CHECKED H. VAN PELT
APPR.
APPR.
FIRST USED 1966
ILLUSTRATION
SERIES A B-C
REV.
PAGE 8-1.2
PART NO. 392349

OLDSMOBILE DIVISION

GENERAL MOTORS CORPORATION
LANSING — MICHIGAN

	PART NO.	MODEL YEAR & PLANT IDENTITY	PLANT	STARTING SERIAL NO.
	387839	NONE		BLANK
	392340	6M	LANSING, MICHIGAN	100001
(C)(D)	387839	6G	FRAMINGHAM, MASS.	100001
(A)	392342	6D	ATLANTA, GEORGIA	100001
	392343	6Z	FREMONT, CALIFORNIA	100001
	392344	6X	KANSAS CITY, KANSAS	100001
	392345	6E	LINDEN, NEW JERSEY	100001
	392346	6C	SOUTH GATE, CALIFORNIA	100001

BLANK-HAS "OLDSMOBILE" ONLY

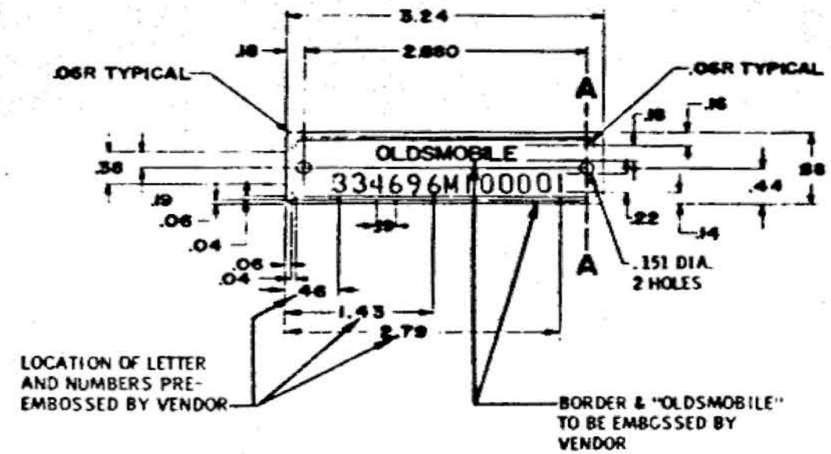

SECTION A-A
FOUR TIMES SIZE

	NAME	SERIES	SERIES & ENGINE NO. (TO BE EMBOSSED AT ASSEMBLY PLANTS AS THE SECOND & THIRD PREFIX DIGIT)
F-85	STD. L-6 ENGINE	33300	33
	STD. V-8 ENGINE	33400	34
	DELUXE L-6 ENGINE	33500	35
	DELUXE V-8 ENGINE	33600	36
	CUTLASS V-8 ENGINE	33800	38
	CUSTOM WAGON V-8 ENGINE	33800	38
FULL SIZE CAR	JETSTAR 88 SERIES	35200	52
	STARFIRE	35400	54
	DYNAMIC 88 SERIES	35600	56
	DELTA 88 SERIES	35800	58
	NINETY-EIGHT SERIES	38400	84
	NINETY-EIGHT LUXURY	38600	86
	DRIVEAWAY CHASSIS (LANSING ONLY)	39800	98

(E) FRAMINGHAM, MASS. WILL BE FURNISHED BLANK PLATES (387839). BALANCE OF PLANTS TO BE FURNISHED PRE-EMBOSSED PLATES.

EXAMPLE:
333076C100001 335696D100001 338676Z100001
352396X100001 356676E100001 384696M100001

EMBOSSED BY ASSEMBLY PLANT (4 DIGITS)

(B) PRE-EMBOSSED BY VENDOR AS INSTRUCTED ON PURCHASE ORDER. SERIAL NUMBER TO BE IN CONSECUTIVE ORDER FOR EACH PLANT.

PLANT SEQUENTIAL NUMBER
PLANT
MODEL YEAR
BODY TYPE
ENGINE TYPE
SERIES
DIVISIONAL CODE

BODY TYPE	BODY CODE
CLUB COUPE	07
HARDTOP COUPE	17
STATION WAGON-2 SEAT	35
HOLIDAY COUPE	37
HOLIDAY SEDAN	39
STATION WAGON-2 SEAT (EXTENDED)	55
HARDTOP COUPE	57
STATION WAGON-3 SEAT (EXTENDED)	65
CONVERTIBLE	67
4 DOOR SEDAN	69
SHORT SILL COWL	60

BCDEKMRXZ
1234567890
SHAPE MANDATORY ON THESE LETTERS & NUMBERS

MATERIAL:
STAINLESS STEEL-SAE #51430
.014 STOCK

PRODUCTION SAMPLE TO BE APPROVED BY PRODUCT ENGINEERING FOR OLDSMOBILE PARTS.

DATE	SYM	REVISION	DR.	CK.	DATE	SYM	REVISION	DR.	CK.	DATE	SYM	REVISION	DR.	CK.
										03-1-65	E	NOTE ADDED	CG	JRS
										8-26-65	D	387839 ADDED	CG	JRS
										4-22-65	C	392341 REMOVED	DS	JF
										2-11-65	B	NOTE REVISED	JRS	JF
										2-11-65	A	PART NO'S REVISED	JRS	JF

CHART PLATE-VEHICLE NUMBER

DATE FEB 2 1965
DR. BY J. D. SMITH
CHECKED J. N. Ames
APPR.
APPR.

FIRST USED 1966
Oldsmobile classic ILLUSTRATION
SERIES A-B-C
REF.
PAGE 0-1.3
PART NO. 392173

SAFETY CHECK

1. MAKE SURE NEUTRAL SAFETY SWITCH IS CORRECTLY ADJUSTED SO CAR DOES NOT START IN REVERSE OR DRIVE.
2. MAKE SURE SHIFT LINKAGE IS CORRECTLY ADJUSTED SO THAT COLUMN STOPS DO NOT INTERFERE WITH THE TRANSMISSION QUADRANT DETENTS IN NEUTRAL AND DRIVE.

IMPORTANT

1. DO NOT EXCEED 1/2 THROTTLE OPERATION, EXCEPT ON MAKING A DOWNSHIFT.
2. DO NOT EXCEED 60 MPH.
3. DO NOT SHIFT TO PARK OR REVERSE WITH ROLLS TURNING.
4. IF CAR HAS EXCESSIVE CREEP, CHECK IDLE RPM AND PROPER VARIABLE STATOR FUNCTION AT IDLE.
5. CHECK FOR GEAR NOISE LEVEL DURING FUNCTIONAL CHECKS IN NEUTRAL, LOW AND REVERSE.
6. (B) DO NOT ACCELERATE OR DECELERATE RAPIDLY WHILE PERFORMING CHECKS.

CHECK AND PROCEDURE

1. MAKE LIGHT THROTTLE START AND OBSERVE UPSHIFT AT 20-30 MPH.
2. OPEN THROTTLE TO DETENT AND OBSERVE FOR VARIABLE STATOR FUNCTION.
3. OPEN THROTTLE THRU DETENT AND OBSERVE FOR DOWNSHIFT FUNCTION.
4. BACK OFF ON THROTTLE AND OBSERVE UPSHIFT AT 50-60 MPH.
5. COAST DOWN TO 45-40 MPH, SHIFT TO LOW RANGE AND OBSERVE SHIFT.
6. STOP WHEELS, SHIFT TO REVERSE AND ACCELERATE LIGHTLY.
7. CHECK OPERATION OF PARKING PAWL ON 10% GRADE OR EQUIVALENT. SHOULD ENGAGE AND RELEASE FREELY WITHOUT RATCHETING.

DATE	SYM	REVISION	DR	CK	DATE	SYM	REVISION	DR	CK	DATE	SYM	REVISION	DR	CK
										4-26-65	C	USAGE REVISED	JJ	JA
										9-30-65	B	LINE ADDED		JA
										4-26-65	A	FORMAT REVISED	JJ	JA

© F-85 5200 EXC. M40

CHART ROLL TEST PROCEDURE

DATE FEB. 15, 1965
DR. BY CHERYL LITCHFIELD
CHECKED R.C. STENPEL
APPR.
APPR.

FIRST USED 1966
SERIES A - B
ILLUSTRATION
REF.
PAGE 8-L.4
PART NO. 392398

(1) VEHICLE IDENTIFICATION NUMBER
ON EMBOSSED PLATE LOCATED ON BODY LEFT FRONT DOOR HINGE PILLAR.
ON EXPORT C.K.D. BLANK PLATE 387839 IS SHIPPED AS ORDERED BY EXPORT WITH ATTACHING RIVET 9423220.
SEE CHART 392173 FOR VEHICLE PLATE COMBINATIONS AND STARTING SERIAL NUMBERS.

(2) ENGINE UNIT NUMBER - (FOR MANUFACTURING AND SERVICE USE)

(A) L6 ENGINE - THERE IS NO L6 SERIAL NUMBER. A DATE CODE IS STAMPED ON PAD ON RIGHT SIDE OF CYLINDER BLOCK TO REAR OF DISTRIBUTOR.

(E) EXAMPLES: F0210VA, T1005VE
"F" WILL DESIGNATE FLINT MOTOR PLANT, "T" WILL DESIGNATE TONAWANDA MOTOR PLANT (C)
THE FIRST TWO (2) DIGITS DESIGNATE THE MONTH AND THE SECOND TWO (2) DIGITS DESIGNATE THE DAY THAT THE UNIT WAS PRODUCED (0210 = FEBRUARY 10, 1005 = OCTOBER 5).
THE LAST TWO (2) LETTERS DESIGNATE THE TYPE ENGINE.

VA - 3 OR 4 SPEED SMT	VE - AUTOMATIC TRANS.
VB - 3 OR 4 SPEED SMT W/C60 OR Y76	VF - AUTOMATIC TRANS. W/C60 OR Y76
VD - 3 OR 4 SPEED SMT W/C60 OR Y76 & K20	VH - AUTOMATIC TRANS. W/C60 OR Y76 & K19 & K20
VC - 3 OR 4 SPEED SMT W/K20	VG - AUTOMATIC TRANS. W/K19 & K20
VJ - 3 OR 4 SPEED SMT EXPORT	VJ - AUTOMATIC TRANS. EXPORT

V-8 ENGINE - UNIT NUMBER IS STAMPED ON MACHINED PAD ON THE FRONT OF THE R.H. CYLINDER HEAD (SEE 395619).

(F)

(D)(B)

(3) TRANSMISSION SERIAL NUMBER:-
DEPENDING ON TYPE OF 3 SPEED OR 4 SPEED MANUAL TRANSMISSION, THE DATE CODE OR SERIAL NUMBER WILL BE AS FOLLOWS:

TYPE STANDARD SMT:-STAMPED ON REAR FACE OF CASE ON RH SIDE.
EXAMPLE:-S0503 (S-SAGINAW TRANS. PLANT; 05-FIFTH MONTH; 03-THIRD DAY OF MONTH)
M13 & M14 TRANS.-SERIAL PLATE LOCATED ON RH SIDE OF CASE.
EXAMPLE:-HEGAF-MODEL NO. 010001-SERIAL NO. (CONSECUTIVELY STARTING 010001)
M20 & M21 4 SPEED:-STAMPED ON RH REAR CASE FLANGE AT APPROX. CENTERLINE OF MAIN SHAFT BORE.
EXAMPLE:-P0503 (P-MUNCIE TRANS. PLANT; 05-FIFTH MONTH; 03-THIRD DAY OF MONTH)
JETAWAY TRANSMISSION YEAR, MODEL & DATE CODE INFORMATION IS STAMPED ON THE BAND SERVO COVER WHICH IS LOCATED ON THE R.H. SIDE OF THE TRANSMISSION. THIS INFORMATION CONSISTS OF TWO DIGITS FOR THE MODEL YEAR, TWO LETTERS FOR THE MODEL CODE & THREE DIGITS TO INDICATE THE DAY OF PRODUCTION THAT THE TRANSMISSION WAS BUILT. FOR MODEL CODE & TRANSMISSION USAGE, SEE CHART 392836.

(4) PONTIAC REAR AXLES
RATIO CODE:-STAMPED ON REAR OF R.H. AXLE TUBE NEAR THE CARRIER - SEE REAR AXLE ASSEMBLY CHART 392400 FOR CODES.
DATE CODE: -STAMPED ON THE DIFFERENTIAL CARRIER COVER.

A - JANUARY	D - APRIL	H - JULY	L - OCTOBER
B - FEBRUARY	E - MAY	J - AUGUST	M - NOVEMBER
C - MARCH	G - JUNE	K - SEPTEMBER	N - DECEMBER

THE MONTH LETTER IS FOLLOWED BY A NUMBER FOR THE DAY OF THE MONTH IN WHICH THE DIFFERENTIAL WAS BUILT.

BUICK REAR AXLES
AXLE RATIO CODE:-STAMPED ON THE REAR OF THE R.H. AXLE TUBE NEAR THE CARRIER - SEE REAR AXLE ASSEMBLY CHART 392400 FOR CODES.
DATE CODE:-STAMPED ON BOTTOM OF R.H. AXLE TUBE. CODE CONSISTS OF TWO (2) LETTERS OR DIGITS WHICH INDICATE RATIO (CHART #1370157) FOLLOWED BY ONE (1) TO THREE (3) DIGITS FOR DAY IN THE YEAR MANUFACTURED. (D) SYMBOL PRECEDING THE RATIO - DATE CODE INDICATES A LOCKING AXLE
SAMPLE MARKING FOR AXLE MANUFACTURED ON DECEMBER 20, 1965 MIGHT BE: STD. AXLE 76-354; - LOCKING AXLE (D) 91-354

DOMESTIC AND S.U.P. EXPORT

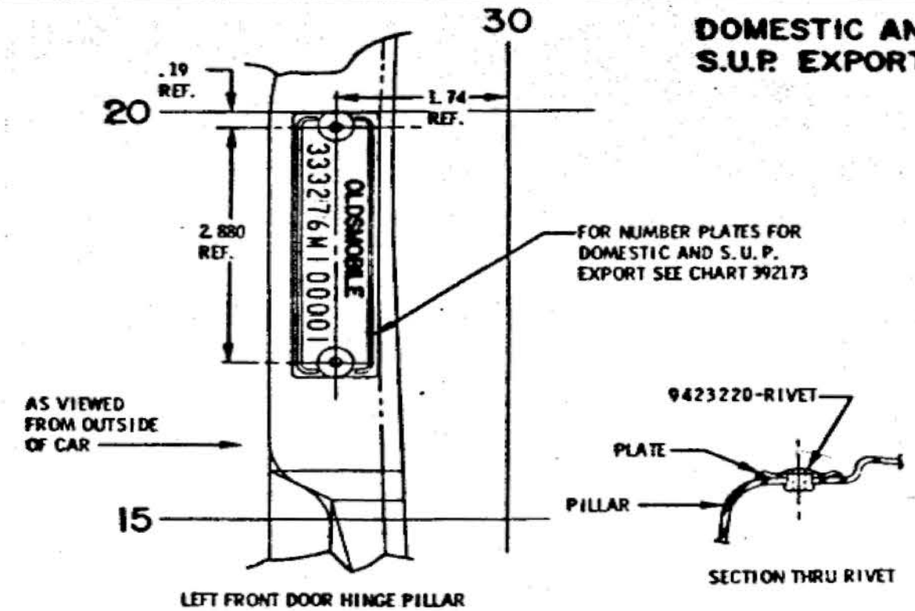

C.K.D. EXPORT

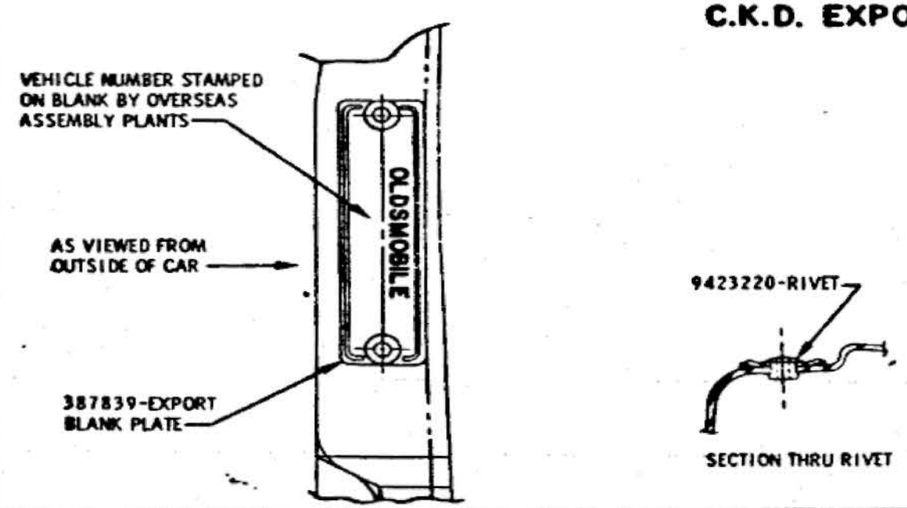

(5) PROTECTIVE VEHICLE NUMBER:-
THE LAST EIGHT (8) SYMBOLS OF THE VEHICLE NUMBER ARE STAMPED AT SEVERAL PLACES ON EVERY CAR. LOCATION OF THIS NUMBER MAY BE OBTAINED BY CONTACTING EITHER OF THE FOLLOWING OFFICES. PRODUCTION MANAGER OR STANDARDS ENGINEERING DEPARTMENT.

DATE	SYM	REVISION	DR.	CK.	DATE	SYM	REVISION	DR.	CK.	DATE	SYM	REVISION	DR.	CK.
										8-31-65	E	LG ENGINE INFO. REVISED	CG	JG
										7-23-65	D	L69 OPTION REMOVED		C
										7-20-65	C	EXAMPLES ADDED	DG	C
										5-5-65	B	L69 OPTION ADDED		
						F	ENGINE UNIT NOS. REDM.	JJ		5-5-65	A	L6 ENGINE INFO ADDED		

INSTALLATION VEHICLE NUMBER PLATE
DATE APRIL 30 1965
DR. BY JIM GRAY
CHECKED
APPR.
APPR.
FIRST USED 1966
SERIES A
ILLUSTRATION
REF.
PAGE B-L5
PART NO. 589998

IT WILL BE THE FULL RESPONSIBILITY OF THE INDIVIDUAL "PLANT MANAGER" TO DETERMINE THE CONCENTRATION OF WASHER SOLVENT NECESSARY TO INSURE OPERATION OF THE WINDSHIELD WASHER SYSTEM FOR CARS PRODUCED IN HIS PLANT DOWN TO A MINIMUM TEMPERATURE OF 0°F. DURING THE PERIOD OF SEPTEMBER 1 TO MAY 1, NO SOLVENT IS TO BE USED IN THE WASHER SYSTEM BETWEEN MAY 1 AND SETEMBER 1.

CLIMATIC CONDITIONS OF THE AREA INTO AND/OR THRU WHICH THE CAR IS BEING SHIPPED WILL CONTROL THE PERCENTAGE OF SOLVENT USED.

THE AMOUNT OF SOLUTION SHOULD BE REGULATED SO THAT A MINIMUM OF (B) 3 PINTS IS LEFT IN THE JAR WHEN THE CAR IS SHIPPED. IF WATER IS USED IN THE PLANT TO TEST THE SYSTEM, THE JAR MUST BE DRAINED AND THE WASHER CYCLED TWO OR THREE TIMES AFTER THE ADDITION OF THE SOLVENT SOLUTION TO CLEAR THE WATER OUT OF THE NOZZLES, MOTOR AND HOSES. THE FOLLOWING TABLE SHOWS THE RATIO OF SOLVENT TO WATER REQUIRED FOR VARYING DEGREES OF PROTECTION.

FREEZING POINT	MIXTURE SOLVENT TO WATER	AMOUNT OF 9985047 SOLVENT TO MAKE 55 GAL. OF SOLUTION (ADD WATER)
0°F.	1:1.5	22 GAL.
8°F.	1:2	18.3 GAL.
16°F.	1:3	13.75 GAL.
24°F.	1:6	7.87 GAL.

AT NO TIME IS THE RATIO OF SOLVENT TO WATER TO EXCEED 1:1.5. THIS MIXTURE WILL FREEZE AT 0°F.

PRODUCTION SAMPLE TO BE APPROVED BY PRODUCT ENGINEERING FOR OLDSMOBILE PARTS.

SOLVENT TO BE USED IS SHOWN UNDER G. M. STANDARD PART NO. 9985047.

DATE	SYM	REVISION	DR.	CK.	DATE	SYM	REVISION	DR.	CK.	DATE	SYM	REVISION	DR.	CK.
										5-6-65	B	WAS 8 OZ.	JJCP	
										4-29-65	A	FORMAT REVISED	JJCP	

CHART WINDSHIELD WASHER SOLUTION

DATE JAN. 27, 1965
DR. BY C. LITCHFIELD
CHECKED J. N. ANES
APPR.
APPR.

PROJECT YEAR 1966
SERIES A-B-C-E
SHEET 1 OF 1
PART NO. 392076

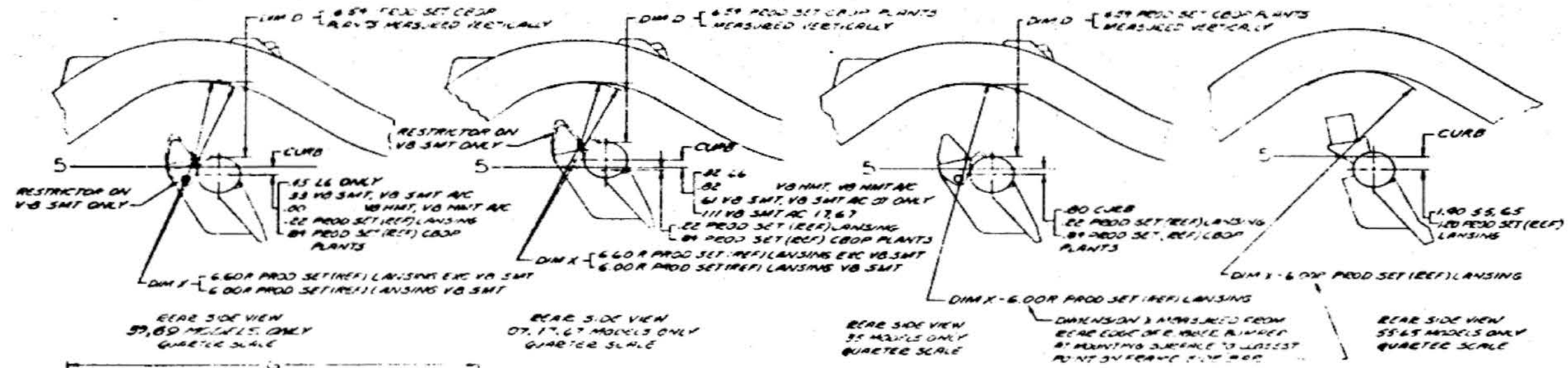

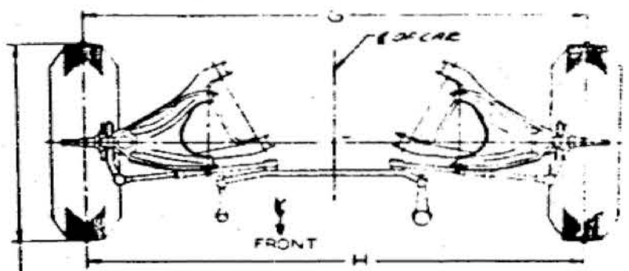

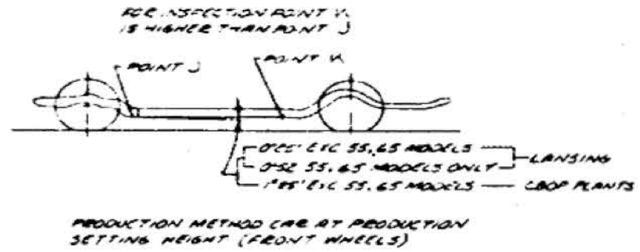

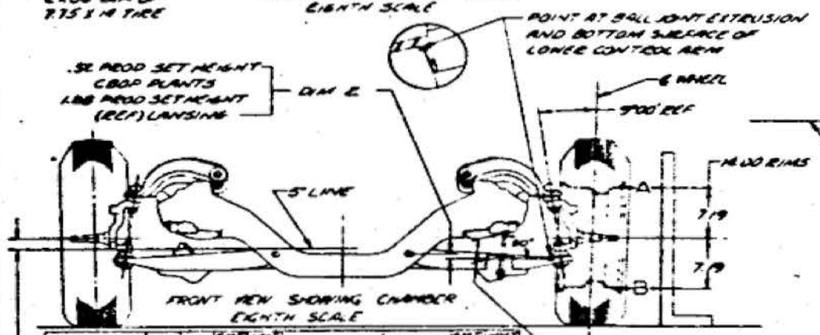

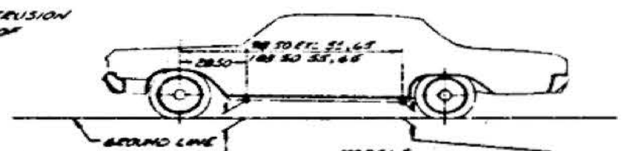

MODELS

10.50 - 59, 69	10.40
9.80 - 07, 17, 67	9.60
10.70 - 55	11.00
11.00 - 55, 65	11.40

CURB CHECK HEIGHTS:
CAR TO BE ON LEVEL SURFACE
FULL TANK OF GAS OR EQUIVALENT WEIGHT. FRONT SEAT IN REARWARD POSITION. TIRES TO BE INFLATED TO 28 PSI. FRONT & REAR.
PRODUCTION TOLERANCE .... ± .50
SERVICE TOLERANCE .... ± .62

	SHT	HHT	SHT AIC	HHT AIC		SHT	HHT	SHT AIC	HHT AIC
3350T - L6	56	54	54	54	3361T - V8	87	1.06	.00	.00
55	16	16	3	3	55	3	91	45	45
69	16	16	3	3	99	47	63	77	77
3340T - V8	87	1.06	.00	.00	69	47	63	77	77
55	91	91	45	45	3361T - V8	87	1.06	.00	.00
65	45	45	45	45	77	87	1.06	.00	.00
69	47	63	77	77	69	87	1.06	.00	.00
3357T - L6	54	54	54	54	69	47	63	77	77
55	16	16	3	3	3362S - V8	45	45	45	45
69	16	16	3	3	65	45	45	45	45
69	16	16	3	3					

.32 PROD SET HEIGHT (ALL) LANSING
1.00 PROD SET HEIGHT (ALL) CROP PLANTS

- DIM V (ENGINEERING SPRING CHECKS ON, V) 3.86 PROD SET HEIGHT ALL (REF) LANSING TAKEN WITH BUMPER REMOVED, MEASURED BETWEEN BUMPER STOP & INSIDE SURFACE OF LOWER CONTROL ARM AT .806 DIA HOLE (USE TOOL RC-77522)

▶ ADD .3 FRONT & REAR FOR AC EQUIPPED CARS OR IF OVER-SIZE TIRES ARE USED. 3455-65, 3855-65 MODELS EXCEPTED

TOE-IN, CAMBER AND CASTER

PRODUCTION SETTING AT FRONT CARRYING HEIGHT USING DIMENSION Z PROD) AND POSITION FRAME SIDE RAIL TO ANGLE SHOWN BETWEEN POINTS J & K.

SERVICE SET CAR TO NORMAL CURB CARRYING HEIGHT USING ROLLER PANEL TO GROUND DIMENSIONS (GAS TANK FULL, TRUNK EMPTY ETC. FOR SPARE & JACK)

TOE-IN

LANSING PROD SETTING DIMENSION G 1/16" TO 1/16" GREATER THAN DIMENSION H.

CROP PLANTS PROD SETTING DIM G 1/16" TO 3/16" GREATER THAN DIMENSION H. VEHICLE MUST BE AT REQ STANDING HEIGHT IN THE AS SHIPPED CONDITION. A MINIMUM OF ONE COMPLETE THREAD MUST PROJECT BEYOND EACH END OF THE ROD SERVICE AFTER TOE-IN IS SET (ALL PLANTS)

SERVICE LIMIT - DISTANCE FROM ONE TIRE TO THE OTHER AT POINT G SHOULD BE 1/8" TO 5/16" GREATER THAN AT POINT H.

CAMBER

LANSING PROD SETTING CAMBER ANGLE 1/16" POSITIVE ± 3/16"

CROP PLANTS PROD SETTING CAMBER ANGLE 3/4" POSITIVE.

SERVICE LIMIT - CAMBER ANGLE 1/2" NEG TO 1/2" POSITIVE EQUIVALENT DISTANCE A IS AT LESS TO .06 MORE THAN B. MAXIMUM VARIATIONS BETWEEN THE TWO SIDES OF THE CAR SHOULD NOT EXCEED 1/2" FOR BOTH PROD & SERVICE SETTINGS.

CASTER

LANSING PROD SETTING CASTER ANGLE TO BE 1 1/2" NEGATIVE ± 3/4"

CROP PLANTS PROD SETTING CASTER ANGLE 1° NEGATIVE.

SERVICE LIMIT - CASTER ANGLE TO BE 1/2° NEG TO 2° NEG. MAXIMUM VARIATIONS BETWEEN THE TWO SIDES OF THE CAR SHOULD NOT EXCEED 1/2° FOR BOTH PROD AND SERVICE SETTING.

TURNING ANGLE - INNER WHEEL, ALL MODELS 36°00'

FRONT WHEEL TRACK (AT GROUND) ALL MODELS 58.00 CURB.

REAR WHEEL TRACK: ALL MODELS 58.00.

OLDSMOBILE DIVISION
GENERAL MOTORS CORPORATION
LANSING, MICHIGAN

391960			
SHEET 1 OF 1			
LAST CHANGE			

TOLERANCES UNLESS OTHERWISE SPECIFIED ± .02 ALLOWED ON TWO PLACE DECIMALS ± .005 ALLOWED ON THREE PLACE DECIMALS ON ALL CASTINGS AND FORGINGS ALLOWANCE FOR FINISH AS FOLLOWS: F1-.005 F2-.01 F3-.02 F4-.03 ETC.
COMMERCIAL TOLERANCES APPLY TO SHEET METAL, GASKETS, TUBING, ROLLED SHAPES OR EXTRUDED SECTIONS & STANDARD PARTS

DO NOT SCALE

DATE JAN 5, 1965	DR. HENDERSON
SCALE AS NOTED	CK. MEZON
MODEL YEAR 1966	DATE J. C. Bennett
	DATE
	DATE

LAYOUT - FRONT & REAR WHEEL ALIGNMENT & TRIM HEIGHTS

FOR C | 391960

0-1.7

F-18

OLDSMOBILE DIVISION GENERAL MOTORS CORPORATION LANSING — MICHIGAN

TRANSMISSION TYPE	AXLE RATIO	REAR TIRES SIZE	REAR TIRES REVS/MI @60 MPH	N/V	SPEEDO DRIVE GEAR PART NO.	SPEEDO DRIVE GEAR TEETH	SPEEDO DRIVEN GEAR TEETH	SPEEDO DRIVEN GEAR ASSY PART NO.	SPEEDO DRIVEN GEAR PART NO.	SPEEDO DRIVEN GEAR COLOR	ADAPTER RATIO	DESIRED RATIO	DRIVE RATIO	% ERROR @60 MPH
3 SPEED FULLY SYNCHRONIZED	(C) 2.78	6.95-14	815	37.76	3708144	8	18		3860341	BROWN	NONE	2.2656	2.250	+ .69
		7.35-14	800	37.07	(28 PITCH)		20		3860343	BLUE	1.125	2.2242	2.222	+ .10
		7.75-14	775	35.91			19		3860342	NATURAL	1.125	2.1546	2.111	+2.06
		7.75-15 (D)	754	34.94			19		3860342	NATURAL	1.125	2.0964	2.111	- .93
	3.08	6.95-14	815	41.84	3708144	8	20		3860343	BLUE	NONE	2.5104	2.5000	+ .42
		7.35-14	800	41.07	(28 PITCH)		19		3860342	NATURAL	NONE	2.4642	2.3750	+ 3.75
		7.75-14	775	39.78	9777230 *		19		3860342	NATURAL	NONE	2.3868	2.2750	+ .50
		8.25-14	761	39.06			21	(E)	3860344	RED	1.125	2.3436	2.3330	+ .45
		7.75-15	754	38.71			18		3860341	BROWN	NONE	2.3226	2.2500	+ 3.23
	3.23	6.95-14	815	43.87	3708144	8	21		3860344	RED	NONE	2.6322	2.6250	+ .27
		7.35-14	800	43.07	9777230 *		20		3860343	BLUE	NONE	2.5842	2.5000	+ 3.37
		7.75-14	775	41.72			20		3860343	BLUE	NONE	2.5032	2.5000	+ .13
		8.25-14	761	40.97			19		3860342	NATURAL	NONE	2.4582	2.3750	+ 3.38
		7.75-15	754	40.59			19		3860342	NATURAL	NONE	2.4354	2.3750	+ 2.52
* 9777230 WITH M-13 & M-14 TRANS.	3.55	6.95-14	815	48.22	3708144	8	20		3860343	BLUE	.8653	2.8932	2.8900	+ .11
		7.35-14	800	47.33	9777230 *		19		3860342	NATURAL	.8653	2.8398	2.7450	+ 3.46
		7.75-14	775	45.85			19		3860342	NATURAL	.8653	2.7510	2.7450	+ .22
		8.25-14	761	45.03			21		3860344	RED	NONE	2.7018	2.6250	+ 2.84
		7.75-15	754	44.61			21		3860344	RED	NONE	2.6766	2.6250	+ 1.97
	3.90	6.95-14	815	52.98	3708144	8	19		3860342	NATURAL	.7692	3.1788	3.0876	+ 2.95
		7.35-14	800	52.00	9777230 *		19		3860342	NATURAL	.7692	3.1200	3.0876	+ 1.05
		7.75-14	775	50.38			18		3860341	BROWN	.7692	3.0228	2.9250	+ 3.34
		7.75-15	754	49.01			18		3860341	BROWN	.7692	2.9406	2.9250	+ .53
	4.11	7.35-14	800	54.80	3708144	8	20		3860343	BLUE	.7692	3.2880	3.2501	+ 1.17
		7.75-14	775	53.09	9777230 *		19		3860342	NATURAL	.7692	3.1854	3.0876	+ 3.18
		7.75-15	754	51.65			19		3860342	NATURAL	.7692	3.0990	3.0876	+ .42
	4.33	7.35-14	800	57.73	3708144	8	21		3860344	RED	.7692	3.4638	3.4126	+ 1.50
		7.75-14	775	55.93	9777230 *		20		3860343	BLUE	.7692	3.3558	3.2501	+ 3.25
		7.75-15	754	54.41			20		3860343	BLUE	.7692	3.2646	3.2501	+ .45

.7692-ADAPTER 535615 (YELLOW) .8653-ADAPTER 535617 (BLUE) 1.125-ADAPTER 540474(NO COLOR)

SHEET 1 OF 3

DATE	SYM	REVISION	DR.	CK.	DATE	SYM	REVISION	DR.	CK.	DATE	SYM	REVISION	DR.	CK.
										8-24-65	E	WAS 3860341	JJ	JG
										6-15-65	D	7.75-15 TIRE ADDED	JG	JF
										5-26-65	C	2.78 AXLE RATIO ADDED	JG	JF
										4-6-65	B	8.25-14 TIRE ADDED	JG	JF
										4-6-65	A	REVISED-WAS SHEET 1 OF 2	JG	JF

CHART **SPEEDOMETER GEAR**

DATE FEB. 19, 1965
DR. BY J.L. GRAY
CHECKED M. PAGE
APPR. R.C. STEWART
APPR.

FIRST USED 1966 — Oldsmobile Service ILLUSTRATION

SERIES A — REF. — PAGE 8-L.30 — PART NO. 392593

OLDSMOBILE DIVISION GENERAL MOTORS CORPORATION LANSING — MICHIGAN

TRANSMISSION TYPE	AXLE RATIO	REAR TIRES SIZE	REAR TIRES REVS/MI @60 MPH	N/V	SPEEDO DRIVE GEAR PART NO.	SPEEDO DRIVE GEAR TEETH	SPEEDO DRIVEN GEAR (E) TEETH	SPEEDO DRIVEN GEAR (E) ASSY PART NO.	SPEEDO DRIVEN GEAR (E) PART NO.	SPEEDO DRIVEN GEAR (E) COLOR	(F) ADAPTER RATIO *	DESIRED RATIO	DRIVE RATIO	% ERROR @60 MPH
4 SPEED FULLY SYNCHRONIZED (STANDARD RATIO) M-20 (CLOSE RATIO) M-21	3.08	6.95-14	815	41.84	3708145	8	22		3860345	GREEN	1.132	2.5104	2.4293	+ 3.34
		7.35-14	800	41.07	(30 PITCH)		22		3860345	GREEN	1.132	2.4642	2.4293	+ 1.44
		7.75-14	775	39.78			22		3860345	GREEN	1.132	2.3868	2.4293	+ 1.75
	3.23	6.95-14	815	43.87	3708145	8	23		3860346	BLACK	1.132	2.6322	2.5398	+ 3.64
		7.35-14	800	43.07			23		3860346	BLACK	1.132	2.5842	2.5398	+ 1.75
		7.75-14	775	41.72			22		3860345	GREEN	1.132	2.5032	2.4293	+ 3.04
		8.25-14	761	40.97			22		3860345	GREEN	1.132	2.4582	2.4293	+ 1.19
		7.75-15	754	40.59			22		3860345	GREEN	1.132	2.4354	2.4293	+ .25
	3.55 (D)	6.95-14	815	48.22	3708145	8	23		3860346	BLACK	NONE	2.8932	2.8750	+ .63
		7.35-14	800	47.33			22		3860345	GREEN	NONE	2.8398	2.7500	+ 3.26
		7.75-14	775	45.85			22		3860345	GREEN	NONE	2.7510	2.7500	0
		8.25-14	761	45.03			22		3860345	GREEN	NONE	2.7018	2.7500	- 1.78
		7.75-15	754	44.61			22		3860345	GREEN	NONE	2.6766	2.7500	- 2.67
	3.90	6.95-14	815	52.98	3708145	8	25		3860348	ORANGE	NONE	3.1788	3.1250	+ 1.72
		7.35-14	800	52.00			25		3860348	ORANGE	NONE	3.1200	3.1250	- .16
		7.75-14	775	50.38			24		3860347	YELLOW	NONE	3.0228	3.0000	+ .76
		7.75-15	754	49.00			25		3860346	BLACK	NONE	2.9406	2.8750	+ 2.28
	4.11	7.35-14	800	54.80	3708145	8	22		3860345	GREEN	.866	3.2880	3.1755	+ 3.54
		7.75-14	775	53.09			25		3860348	ORANGE	NONE	3.1854	3.1250	+ 1.93
		7.75-15	754	51.65			24		3860347	YELLOW	NONE	3.0990	3.0000	+ 3.30
	4.33	7.35-14	800	57.73	3708145	8	24		3860347	YELLOW	.866	3.4638	3.4642	- .01
		7.75-14	775	55.93			23		3860346	BLACK	.866	3.3558	3.3199	+ 1.08
		7.75-15	754	54.41			22		3860345	GREEN	.866	3.2646	3.1755	+ 2.81

* USE RIGHT ANGLE SPEEDOMETER DRIVE ADAPTERS ONLY

1.132 ADAPTER 395431 (NO COLOR)

.866 ADAPTER 395430 (BLUE)

SHEET 2 OF 3

DATE	SYM	REVISION	DR.	CK.	DATE	SYM	REVISION	DR.	CK.	DATE	SYM	REVISION	DR.	CK.
										8-27-65	E	SPEEDO GEARS REVISED		JG
										3-10-65	D	AXLE RATIO ADDED		JG
										4-6-65	C	REVISED	JG	JF
										3-18-65	B	SLEEVE ASSY PART NOS ADDED	JE	JF
					12-2-65	F	ADAPTER RATIO REVISED	JJ	JF	3-18-65	A	WAS 1959278	JE	JF

CHART — SPEEDOMETER GEAR

DATE APRIL 6, 1965
DR. BY J. L. GRAY
CHECKED
APPR. R. C. STEMPEL
APPR.

FIRST USED 1966 — Oldsmobile Div. ILLUSTRATION

SERIES A — REF. — PART NO. 392593 — PAGE 8-1.11

OLDSMOBILE DIVISION GENERAL MOTORS CORPORATION LANSING — MICHIGAN

TRANSMISSION TYPE	AXLE RATIO	REAR TIRES SIZE	REAR TIRES REVS/MI @60 MPH	N/V	SPEEDO DRIVE GEAR PART NO.	SPEEDO DRIVE GEAR TEETH	SPEEDO DRIVEN GEAR TEETH	SPEEDO DRIVEN GEAR SLEEVE ASSY PART NO.	SPEEDO DRIVEN GEAR PART NO.	SPEEDO DRIVEN GEAR COLOR	ADAPTER RATIO	DESIRED RATIO	DRIVE RATIO	% ERROR @60 MPH
6 AND 8 CYLINDER JETAWAY TRANS.	2.78	6.95-14	815	37.76	1359239 (28 PITCH)	17	38	1362284	(B) 1359272	BLUE	NONE	2.2656	2.2352	+1.36
		7.35-14	800	37.07			37	1362284	1359271	RED	NONE	2.2242	2.1764	+2.19
		7.75-14	775	35.91			36	1362284	1359270	WHITE	NONE	2.1546	2.1176	+1.75
		8.25-14	761	35.26			36	1362284	1359270	WHITE	NONE	2.1156	2.1176	-.09
		7.75-15	754	34.94			36	1362284	1359270	WHITE	NONE	2.0964	2.1176	-1.00
	3.08	6.95-14	815	41.84	1359239	17	41	1362285	1362195	YELLOW	NONE	2.5104	2.4117	+[illegible]
		7.35-14	800	41.07			41	1362285	1362195	YELLOW	NONE	2.4642	2.4117	+2.18
		7.75-14	775	39.78			40	1362285	1362048	BLACK	NONE	2.3868	2.3529	+1.44
		8.25-14	761	39.06			39	1362284	1359273	BROWN	NONE	2.3436	2.2941	+[illegible]
		7.75-15	754	38.71			39	1362284	1359273	BROWN	NONE	2.3226	2.2941	+1.24
	3.23	6.95-14	815	43.87	1359239	17	38	1362284	1359272	BLUE	.8653	2.6322	2.5832	+1.90
		7.35-14	800	43.07			43	1362285	1362196	PURPLE	NONE	2.5842	2.5294	+2.17
		7.75-14	775	41.72			42	1362285	1362049	GREEN	NONE	2.5032	2.4705	+1.32
		8.25-14	761	40.97			41	1362285	1362195	YELLOW	NONE	2.4582	2.4117	+1.85
		7.75-15	754	40.59			41	1362285	1362195	YELLOW	NONE	2.4354	2.4117	+.98
	3.55	6.95-14	815	48.22	1359239	17	42	1362285	1362049	GREEN	.8653	2.8932	2.8551	+1.34
		7.35-14	800	47.33			41	1362285	1362195	YELLOW	.8653	2.8398	2.7871	+1.89
		7.75-14	775	45.85			40	1362285	1362048	BLACK	.8653	2.7510	2.7192	+1.17
		8.25-14	761	45.03			39	1362284	1359273	BROWN	.8653	2.7018	2.6512	+1.87
		7.75-15	754	44.61			39	1362284	1359273	BROWN	.8653	2.6766	2.6512	+.96
	3.90	6.95-14	815	52.98	1359239	17	41	1362285	1362195	YELLOW	.7692	3.1788	3.1353	+1.39
		7.35-14	800	52.00			40	1362285	1362048	BLACK	.7692	3.1200	3.0589	+2.00
		7.75-14	775	50.38			39	1362284	1359273	BROWN	.7692	3.0228	2.9824	+1.35
		7.75-15	754	49.01			38	1362284	1359272	BLUE	.7692	2.9406	2.9059	+1.19
	4.11	7.35-14	800	54.80	1359239	17	42	1362285	1362049	GREEN	.7692	3.2880	3.2118	+2.37
		7.75-14	775	53.09			41	1362285	1362195	YELLOW	.7692	3.1854	3.1353	+1.60
		7.75-15	754	51.65			40	1362285	1362048	BLACK	.7692	3.0990	3.0589	+1.31
	4.33	(A) 7.75-14	775	55.93	1354239	17	43	1362285	1362196	PURPLE	.7692	3.3558	3.2884	+2.05
		7.75-15	754	54.41			42	1362285	1362049	GREEN	.7692	3.2646	3.2118	+1.64

.7692-ADAPTER 535615 (YELLOW) .8653-ADAPTER 535617 (BLUE)

SHEET 3 OF 3

DATE	SYM	REVISION	DR.	CK.	DATE	SYM	REVISION	DR.	CK.	DATE	SYM	REVISION	DR.	CK.
										8-24-65	B	WAS 1359271	JJ	JG
										8-24-65	A	7.35-14 TIRE REMOVED	JJ	JG

CHART SPEEDOMETER GEAR

DATE FEB. 18, 1965
DR. BY GALE GRAY
CHECKED H. PAGE
APPR. R.C. STEINKEL
APPR.

FIRST USED 1966

Oldsmobile Service ILLUSTRATION

SERIES A

REF.

PAGE 0-1.12

PART NO. 392593

OLDSMOBILE DIVISION GENERAL MOTORS CORPORATION LANSING — MICHIGAN

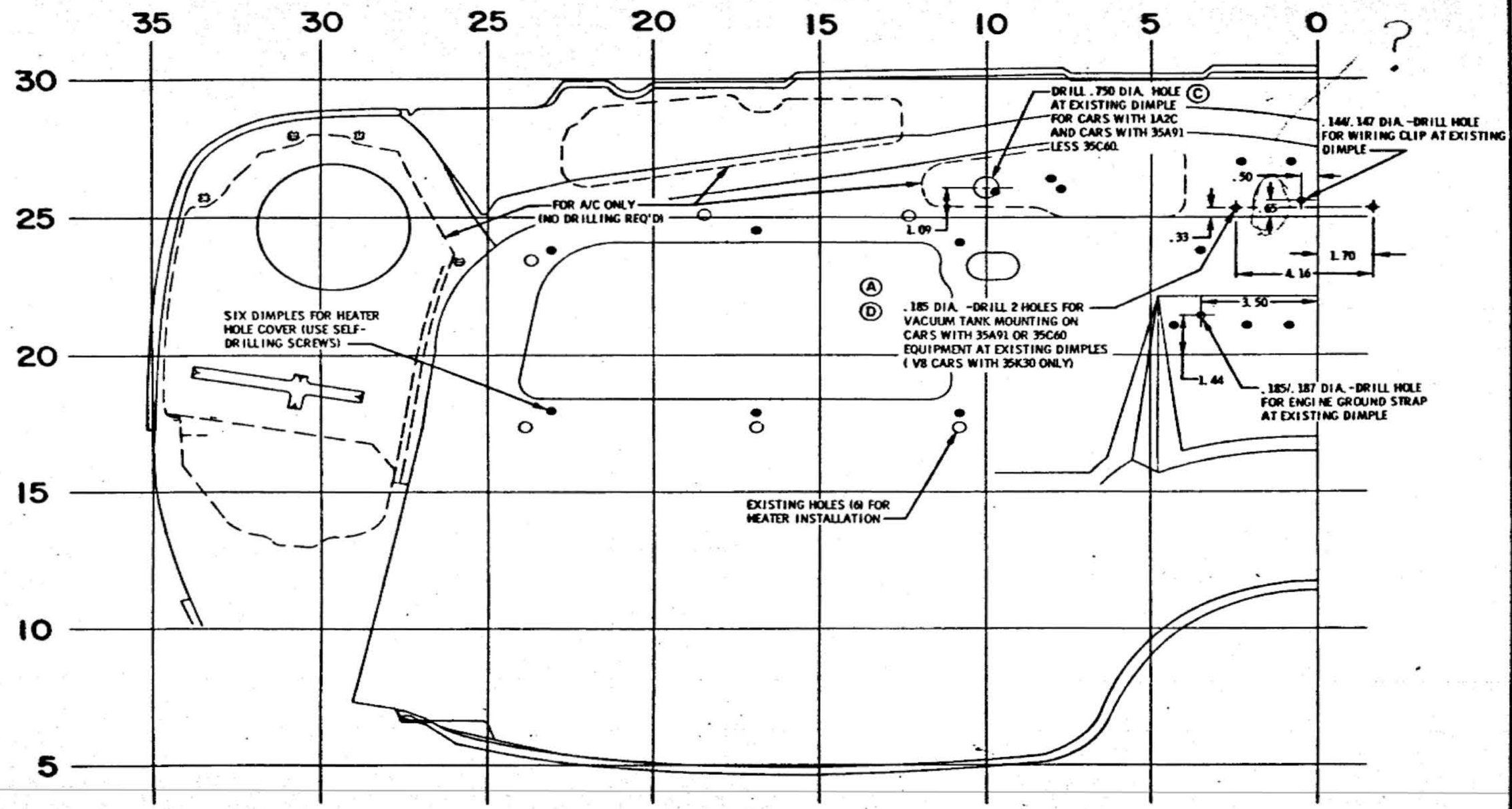

SHEET 1 OF 5

DATE	SYM	REVISION	DR.	CK.	DATE	SYM	REVISION	DR.	CK.	DATE	SYM	REVISION	DR.	CK.
										9-23-65	D	NOTE REVISED		JP
										2-26-65	C	NOTE REVISED		JP
										7-8-65	B	WAS SHEET 1 OF 4		JP
										5-20-65	A	.185 DIA-2 HOLES ADDED		JP

LAYOUT DRILLING (DASH PANEL)

DATE MAY 13, 1965
DR. BY JIM GRAY
CHECKED
APPR.

FIRST ISSUED 1966

ILLUSTRATION

PAGE 8-1.13

REVISED A

DIV.

PART NO. 393381

OLDSMOBILE DIVISION GENERAL MOTORS CORPORATION LANSING — MICHIGAN

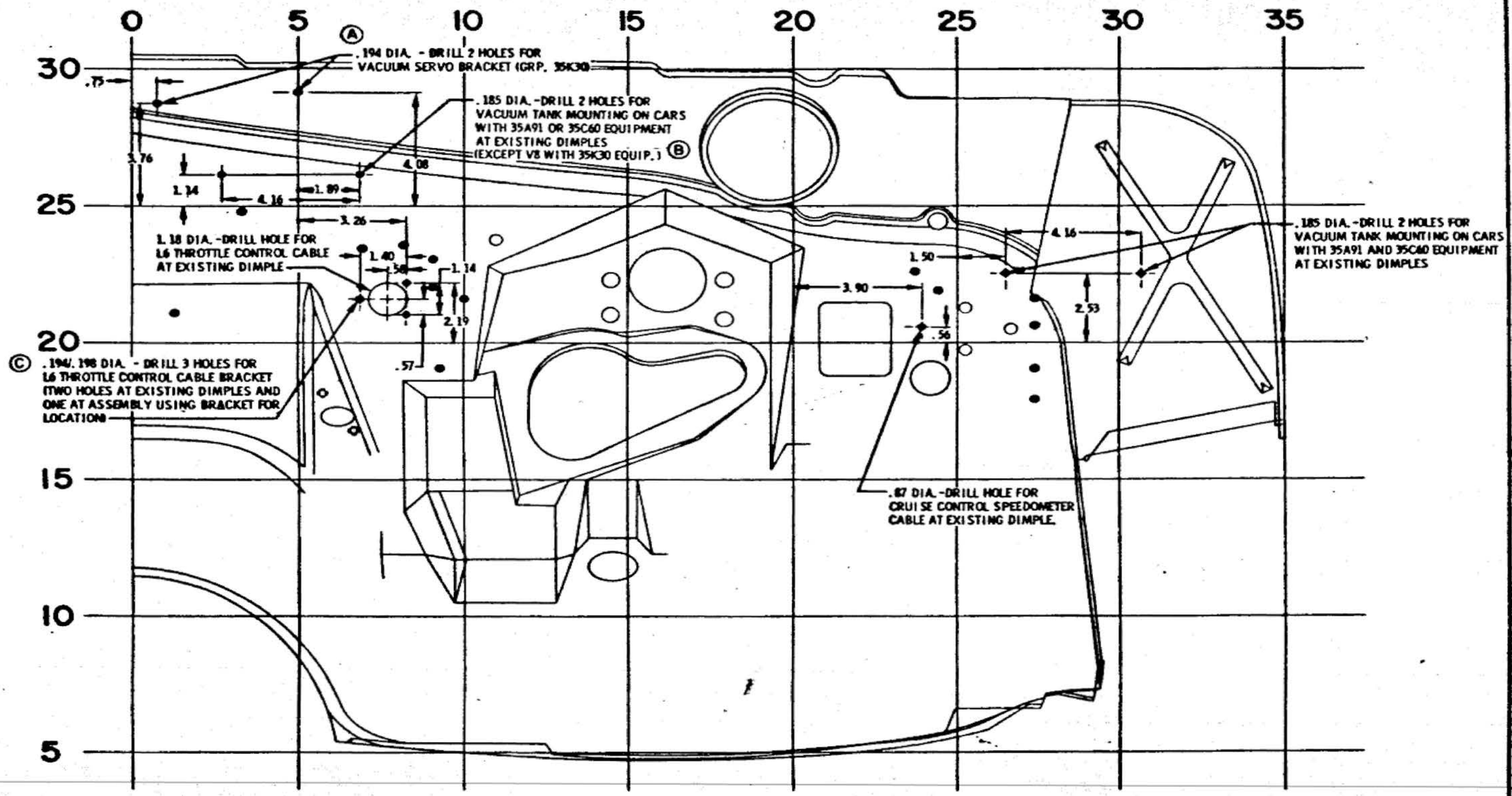

SHEET 2 OF 5

DATE	SYM	REVISION	DR.	CK.	DATE	SYM	REVISION	DR.	CK.	DATE	SYM	REVISION	DR.	CK.
										7-8-65	D	WAS SHEET 2 OF 4	JG	JP
										6-10-65	C	NOTE REVISED	JG	JG
										6-1-65	B	NOTE REVISED	JG	JP
										6-1-65	A	.194-2 HOLES ADDED	JG	JP

LAYOUT DRILLING (DASH PANEL)

DATE MAY 13, 1965
DR. BY JIM GRAY
CHECKED
APPR.
APPR.

FIRST USED 1966

SCALE A

PAGE 8-L 13A

PART NO. 393381

OLDSMOBILE DIVISION GENERAL MOTORS CORPORATION LANSING — MICHIGAN

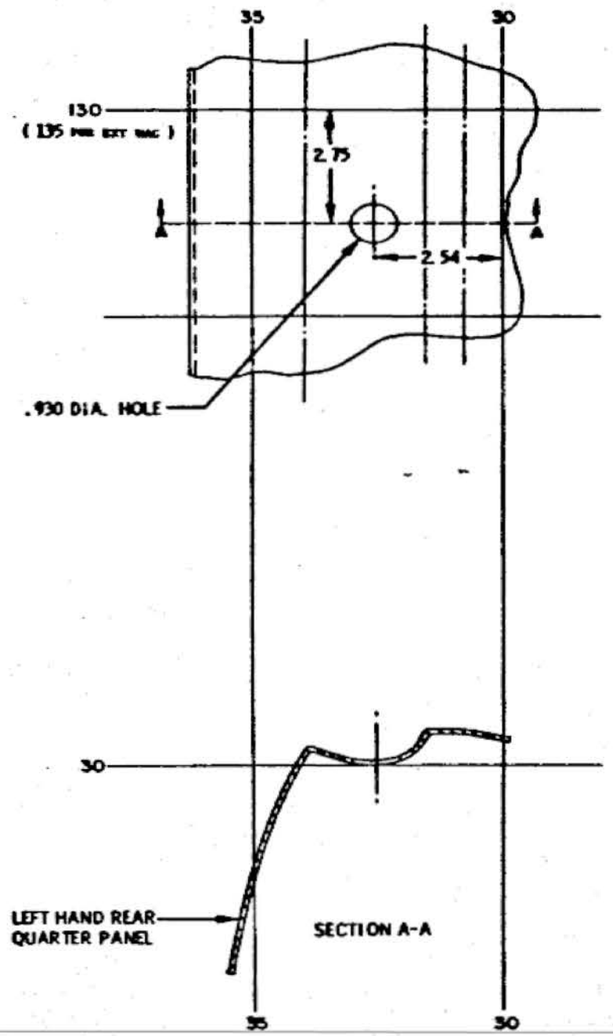

HOLE LOCATION FOR ELECTRIC ANTENNA (STATION WAGONS ONLY)

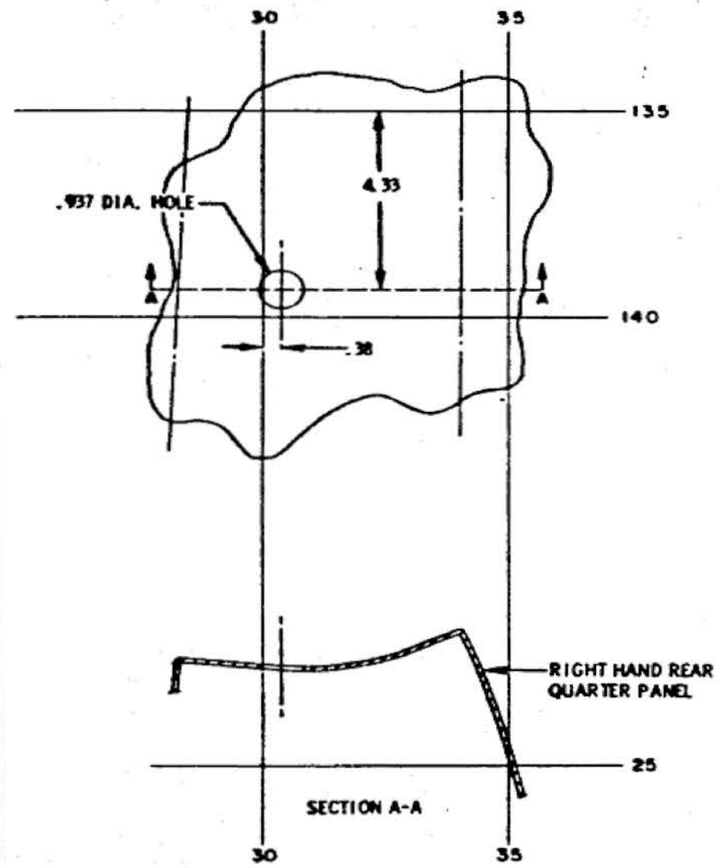

HOLE LOCATION FOR ELECTRIC ANTENNA (EXC. STATION WAGONS)

SCREW LOCATIONS FOR OUTSIDE REAR VIEW MIRROR. (MIRROR IS ATTACHED TO DOOR WITH SELF DRILLING SCREWS)

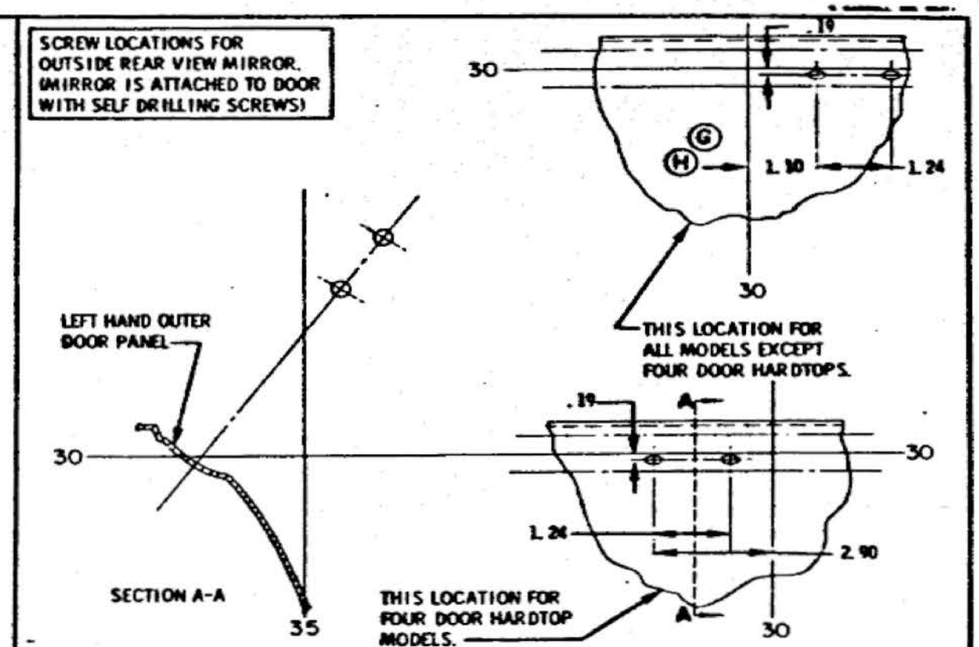

HOLE LOCATIONS FOR REMOTE CONTROLLED OUTSIDE REAR VIEW MIRROR (M)

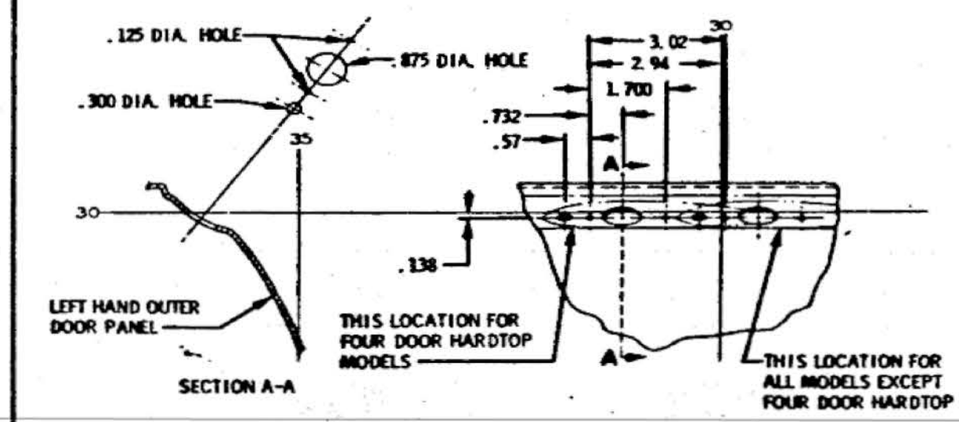

SHEET 3

DATE	SYM	REVISION	DR.	CK.	DATE	SYM	REVISION	DR.	CK.	DATE	SYM	REVISION	DR.	CK.
					10-27-65	K	WAS 2.40	JG	JA	10-30-65	E	WAS .750 DIA HOLE	JG	JA
					10-27-65	J	WAS 2.40	JG	JA	10-8-65	D	HOLES RELOCATED	JG	JA
					10-27-65	H	WAS .61	JG	JA	7-16-65	C	WAS HOLE LOCATIONS	JG	C
10-27-65	M	VIEW REVISED	JG	JA	10-22-65	G	WAS 1.10	JG	JA	7-15-65	B	HOLES RELOCATED	JG	C
10-27-65	L	WAS 1.10	JG	JA	9-20-65	F2	WAS .34	JG	JA	7-8-65	A	WAS SHEET 3 OF 4	JG	JA

LAYOUT — DRILLING (MISCELLANEOUS)

DATE MAY 13, 1965
DR. BY JIM GRAY
CHECKED
APPR.
APPR.

FIRST USED 1966

Oldsmobile Service ILLUSTRATION

SERIES A

REF.

PAGE 0-1.130

PART NO. 393381

OLDSMOBILE DIVISION GENERAL MOTORS CORPORATION LANSING — MICHIGAN

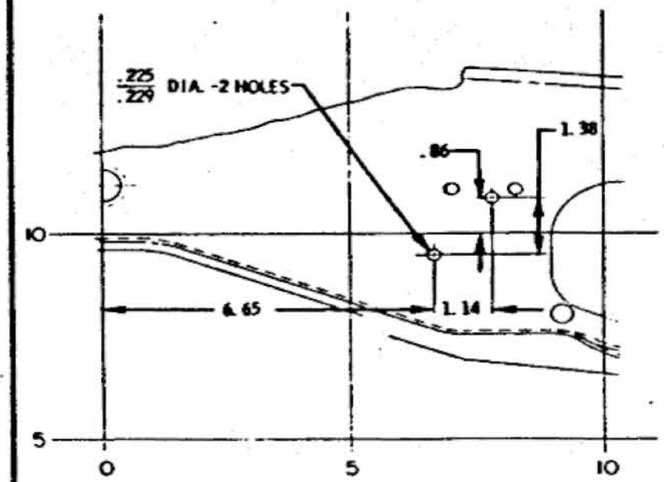

HOLE LOCATIONS IN REAR SPRING SUPPORT OF FRAME-EXC. EXTENDED WAGONS (LEFT HAND SIDE OF CAR)

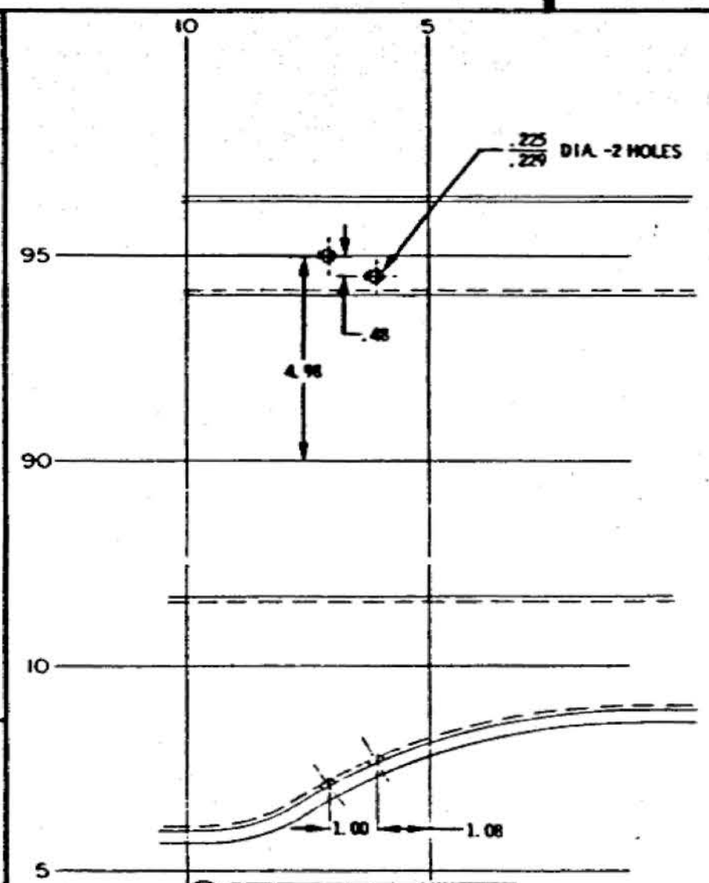

(A) HOLE LOCATIONS IN REAR SPRING SUPPORT OF FRAME-EXTENDED WAGONS ONLY (RIGHT HAND SIDE OF CAR)

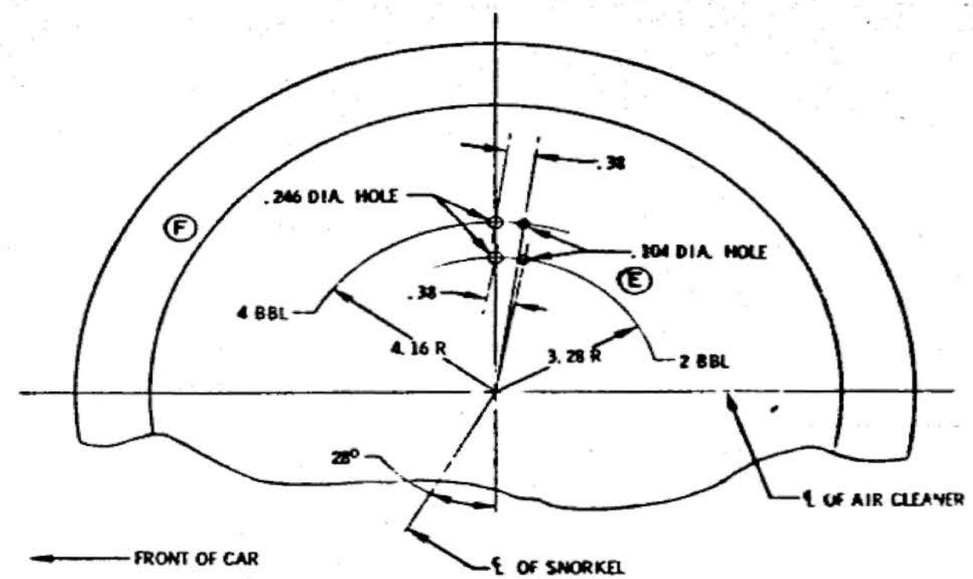

HOLE LOCATIONS IN AIR CLEANER (2 BBL & 4 BBL CARS)

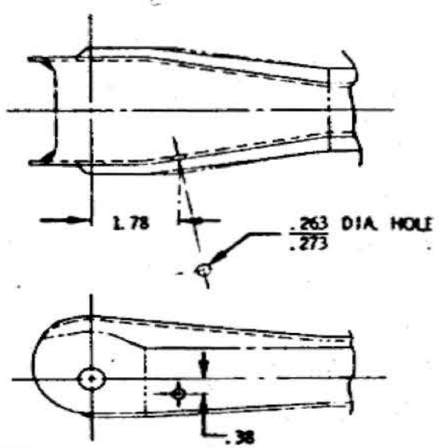

(D) HOLE LOCATION IN L.H. UPPER CONTROL ARM-EXC. EXTENDED WAGONS (REAR SUSPENSION)

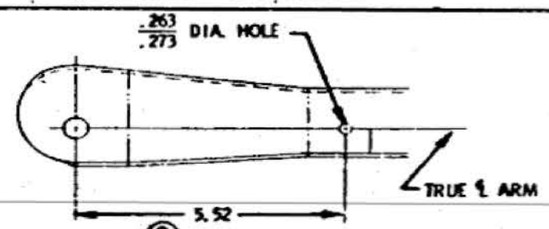

(G) HOLE LOCATION IN R.H. UPPER CONTROL ARM-EXTENDED WAGONS ONLY (REAR SUSPENSION)

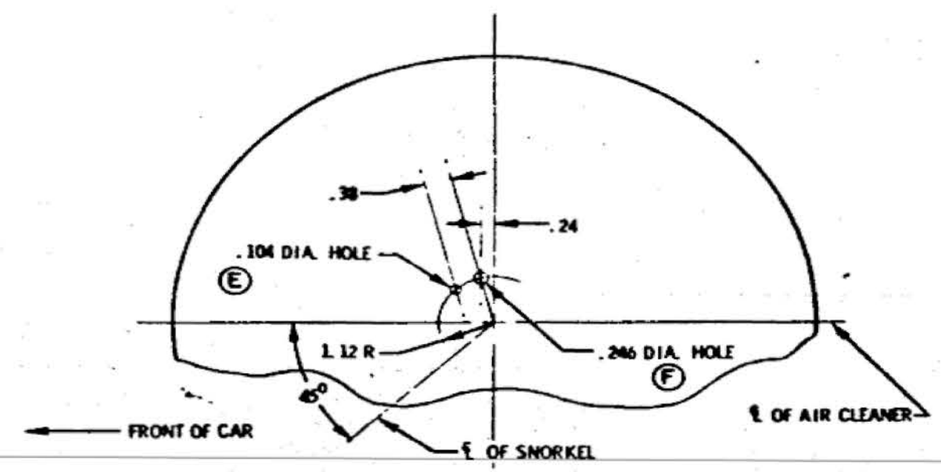

HOLE LOCATIONS IN AIR CLEANER (6 CYLINDER CARS)

AUTOMATIC SUPERLIFT SHOCKS SHEET 4

DATE	SYM	REVISION	DR.	CK.	DATE	SYM	REVISION	DR.	CK.	DATE	SYM	REVISION	DR.	CK.
										9-10-65	E2	WAS .113-.115 DIA	CS	JF
										7-27-65	D	WAS R.H. CONTROL ARM	KG	JF
										7-8-65	C	WAS SHEET 4 OF 4	KG	JF
					4-29-65	6	WAS 5.55	DM	JF	7-8-65	B	REVISED & REDRAWN	KG	JF
					9-10-65	E1	WAS .250 DIA.	CS	JF	6-25-65	A	.251/.279 DIA. - 2 HOLES ADDED	KG	JF

LAYOUT DRILLING (MISCELLANEOUS)

DATE MAY 13, 1965
DR. BY JIM GRAY
CHECKED
APPR.
APPR.

FIRST USED 1966

Oldsmobile Service ILLUSTRATION

SERIES A

REV.

PAGE 0-L 13C

PART NO. 393381

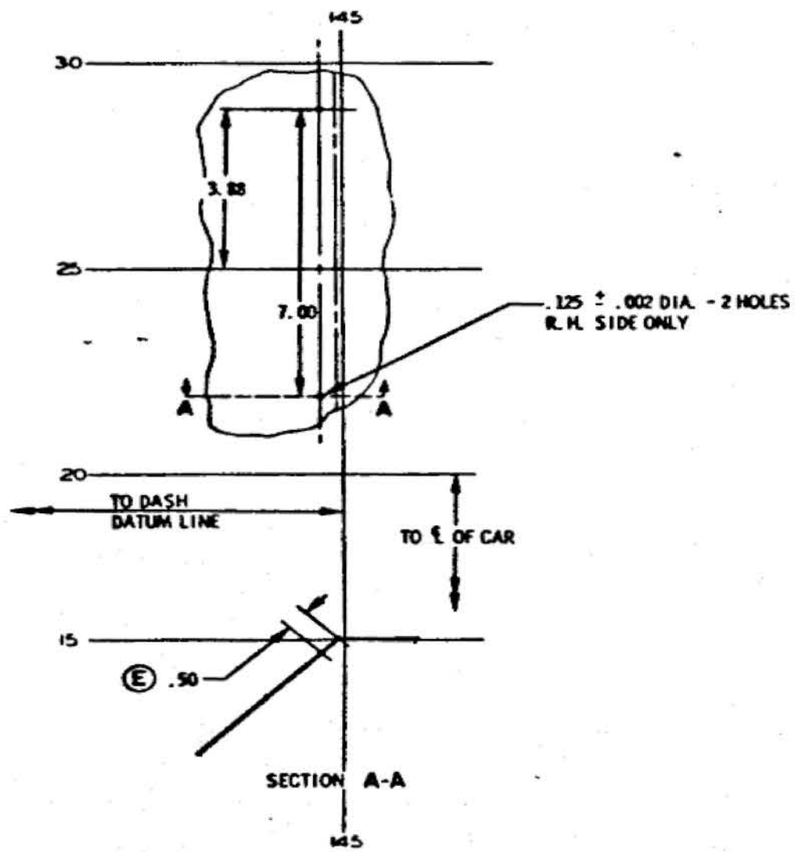

Ⓐ
Ⓓ JACK HANDLE HOLD DOWN
P05 OPTION ONLY

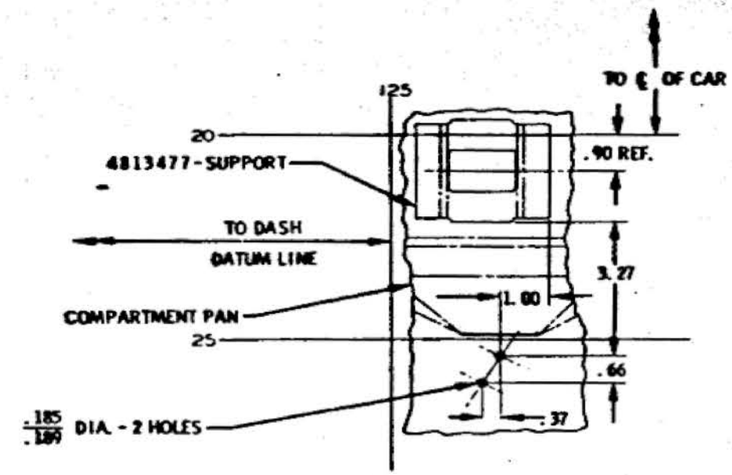

Ⓑ DRILLING INFORMATION FOR JACK HOLD DOWN

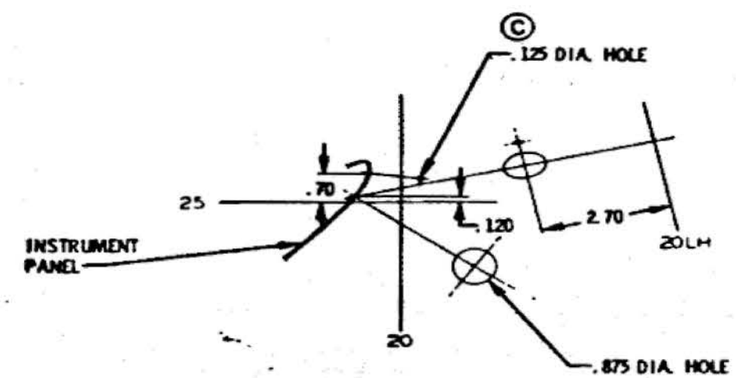

HOLE LOCATION IN INSTRUMENT PANEL FOR CRUISE CONTROL SWITCH ASSEMBLY

SHEET 5

DATE	SYM	REVISION	DR.	CK.	DATE	SYM	REVISION	DR.	CK.	DATE	SYM	REVISION	DR.	CK.
										5-25-66	C	WAS 200	JJ	AP
										1-27-66	D	NOTE REVISED	JG	AP
										11-18-65	C	.125 DIA. HOLE ADDED	JJ	AP
										11-18-65	B	VIEW ADDED	JJ	AP
										9-29-65	A	VIEW ADDED	JJ	AP

LAYOUT — DRILLING (MISCELLANEOUS)

DATE JULY 8, 1965
DR. BY JIM GRAY
CHECKED John Armour
APPR.
APPR.

FIRST USED 1966
Oldsmobile Classic ILLUSTRATION
SERIES A
REV.
PAGE 0-1.130
PART NO. 393381

OLDSMOBILE DIVISION GENERAL MOTORS CORPORATION LANSING — MICHIGAN

NAME OF INSTALLATION	INSTALLATION REFERENCE NUMBER	TEMPLATE PART NUMBER	TEMP. DWG. SIZE	DESCRIPTION OF TEMPLATE
AIR CONDITIONING	394300 (L6) 394301 (V8)	384000 384001 386434 384328 384498 384336	B B D D C B	INSTRUMENT PANEL CUTOUT - R. H. INSTRUMENT PANEL CUTOUT - L. H. DASH PANEL CUTOUT - EVAPORATOR DASH PANEL CUTOUT - BLOWER EVAPORATOR SIDE CUTOUT VACUUM TANK RELOCATION
ANTENNA-MANUAL	384303	392684	B	FENDER DRILLING - FRONT
ANTENNA-ELECTRIC	393608	392694 384488	C B	FENDER DRILLING - REAR TOE PAN DRILLING
CARRIER-LUGGAGE (S. W.)	384194			
CARRIER-LUGGAGE (LID)	393894			
CARRIER-SKI	393895			
BRAKES-DUAL-HYD.	389489			
CONTROL-CRUISE	393801	393755	B	INSTRUMENT PANEL DRILLING
DEFLECTOR-ROOF (S. W.)	392055			
FLARESTAT	389283			
HEATER	393672			
LAMP-PARK. BRAKE	393611	386623	A	INSTRUMENT PANEL DRILLING
LAMP-COURTESY	389260			
LAMP-GLOVE BOX	393627			
LAMP-TRUNK	388742			
LATCH-TRUNK LID	393637	384336	B	FILLER PLATE DRILLING
LOCK-DOOR SAFETY	390176			
MIRROR-VISOR VANITY	380062			
MIRROR-REMOTE	393613	392792 393352	C D	DOOR TRIM CUTOUT (FIRST TYPE) DOOR DRILLING - OUTSIDE
CLOCK	393609			

NAME OF INSTALLATION	INSTALLATION REFERENCE NUMBER	TEMPLATE PART NUMBER	TEMP. DWG. SIZE	DESCRIPTION OF TEMPLATE
MIRROR-OUTSIDE	393612	393855	D	DOOR DRILLING - OUTSIDE
RADIO	393614			
SHOCK ABSORBER-AUTOMATIC LEVELING	393921	393698 393924	B A	REAR SPRING SUPPORT DRILLING UPPER CONTROL ARM DRILLING
		393697 393699	A B	REAR SPRING SUPPORT DRILLING (VISTA CRUISER) UPPER CONTROL ARM DRILLING (VISTA CRUISER)
SHOCK ABSORBER-AIR BOOSTER	387281			
MIRROR-REMOTE	395556	395224 395266 395267	D D C	DOOR DRILLING-OUTSIDE DOOR RE-DRILLING-OUTSIDE (SECOND TYPE) DOOR TRIM CUTOUT
REAR SPEAKER	388636	384198	C	TRIM PANEL CUTOUT (S. W.)
LAMPS BACK-UP	393610			
TACHOMETER	393615	393753	B	INSTRUMENT PANEL PAD CUTOUT
SEAT BELTS	393703			
REAR WINDOW DEFOGGER	396238			

DATE	SYM	REVISION	DR.	CK.	DATE	SYM	REVISION	DR.	CK.	DATE	SYM	REVISION	DR.	CK.
										9-29-66	B	PART NO'S ADDED	KL	DT
										1-10-66	A	DWG SIZES ADDED	JG	RP

CHART — TEMPLATE

DATE DEC. 11, 1965
DR. W. R. R. STRAWLAKE
CHECKED
APPR.
APPR.

FIRST ISSUED 1966
ILLUSTRATION
SERIES A
REV.
PAGE 0-1.16
PART NO. 589998

EXTERIOR PAINT CHART

			Body & Sheet Metal-Acrylic Lacquer			Wheels - Enamel	
Color Code	Fisher W Number	Color Name	Rinshed Mason Code No.	duPont Code No.	Forbes Code No.	Rinshed-Mason Code No.	duPont Code No.
A	848	Ebony Black	L61K005 or L55K011	868-96459	710-360	E29K001	780-76600
B	3300	Nocturne Mist	L62B030 or L58B030	867-97211	720-383	E29B072	781-97211
C	2661	Provincial White	L61W004 or L55W004	868-93774	710-178	E29W008	780-93774
D	3301	Lucerne Mist	L62B033 or L58B033	867-97219	720-390	E29B073	781-97219
E	3302	Royal Mist	L62B009 or L58B009	867-97220	720-391	E29B074	781-97220
H	3303	Laurel Mist	L62G017 or L58G017	867-97223	720-393	E29G044	781-97223
J	3304	Forest Mist	L62G018 or L58G018	867-97224	720-394	E29G045	781-97224
K	3305	Ocean Mist	L62B012 or L58B012	867-97217	720-388	E29B075	781-97217
L	3495	Tropic Turquoise	L62B071 or L58B071	867-97561	720-426	E29B077	781-97561
M	3487	Autumn Bronze	L62R017 or L58R017	867-97592	720-424	E29R037	781-97592
N	3307	Burgundy Mist	L62M008 or L58M008	867-97213	720-385	E29M009	781-97213
R	3309	Target Red	L61R020 or L55R020	868-97540	710-395	E29R036	780-97214
T	3484	Sierra Mist	L62N044 or L58N044	867-97591	720-423	E29N041	781-97591
V	3136	Almond Beige	L61N001 or L55N001	868-96261	710-347	E29N034	780-96261
W	3478	Silver Mist	L62A028 or L58A028	867-97593	720-425	E29A037	781-97593

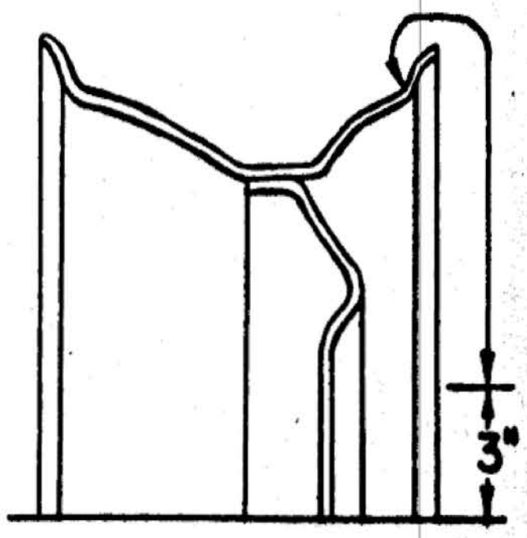

Note: Area enclosed with the arrow is to be painted wheel color with synthetic enamel. Back side of wheel, tire mounting surfaces, and within a three (3) inch radius of the wheel centerline are not to be painted although fogging is permitted.

Wheels for cars equipped with N95, P01 or P02 wheel discs are to be painted Ebony Black, RM E29K001 or DuPont 780-76600.

Wheels for cars equipped with hub caps are to be painted lower body color.

6-16-65 Corrected RM code for "L". Added sales names for L,M,T & W.

0-1.17

CHART: PAINT & TRIM SPECIFICATIONS	
ISSUED BY: G. T. JONES	
DATE: 4-21-65	DWG. BY: R. DUSTAN
SHEET NO.: 1	PART NO.: 393186

OLDSMOBILE

1966 "A" BODY MODELS

INTERIOR PAINT CHART

Color	Fisher W Number	RINSHED-MASON			DU PONT			PLASTIC	
		Semi-Gloss Lacquer W60A	Flat Lacquer W0A	Semi-Gloss Enamel W60DE	Semi-Gloss Lacquer W60A	Flat Lacquer W0A	Semi-Gloss Enamel W60DE	Eastman Tenite II	Celanese Forticel
Parchment	2921	L49N035	---	E51N038	864-77991	----	796-77991	----	----
Med. Green Met.	3303	L50G009	----	E51G037	863-97194	----	799-97194	R0R176	W4536B (3)
Med. Blue Met.	3301	L50B003	----	E51B084	863-97162	----	799-97162	R49428	W4658B (1)
Med. Fawn Met.	3484	L50N003	----	E51N101	863-97701	----	799-97701	R1R381	W4899B (2)
Med. Red	3309	L49R044	----	E51R045	864-97260	----	796-97260	R49626	W4645B (1)
Med. Turquoise Met.	3305	L50B091	----	E51B078	863-97258	----	799-97258	R49265	W4531B (3)
Med. Bronze Met.	3487	L50R003	----	E51R053	863-97704	----	799-97704	R1R382	W4895B (1)
Black	848	L49K004	L54K011	E51K006	864-94904	864-56562	796-94904	R20167	W1020A
Midnite Green Met.	3304	L50G002	L54G001	E51G040	863-97196	863-56629	799-97196	----	----
Midnite Blue Met.	3302	L50B092	L54B002	E51B077	863-97257	863-56628	799-97257	----	----
Midnite Fawn Met.	3321	L50N082	L54N001	E51N091	863-97267	863-56624	799-97267	----	----
Dk. Maroon	3496	L49R002	L54R004	E51R055	864-97730	864-56684	796-97730	----	----
Dk. Turquoise Met.	3483	L50B005	L54B006	E51B094	863-97700	863-56680	799-97700	----	----
Dk. Bronze Met.	3488	L50R004	L54R003	E51R054	863-97705	863-56683	799-97705	----	----

6-16-65 removed 40° material note. Added plastic code numbers where possible. 9-16-65 Added Eastman plastic numbers for Med. Fawn and Med. Bronze.

0-1.17A

CHART: PAINT & TRIM SPECIFICATIONS

ISSUED BY: G. T. JONES

DATE: 4-21-65 DWG. BY: R. DUSTAN

SHEET NO.: 2 PART NO.: 393186

PAINT & TRIM USAGE

	Exterior Colors	INTERIOR TRIM COLORS							
		Black	Green	Blue	Fawn	Red	Turquoise	Parchment	Bronze
A	Ebony Black	X	X	X	X	X	X	X	X
B	Nocturne Mist	X		X				X	
C	Provincial White	X	X	X	X	X	X	X	X
D	Lucerne Mist	X		X				X	
E	Royal Mist	X		X				X	
H	Laurel Mist	X	X					X	
J	Forest Mist	X	X					X	
K	Ocean Mist	X					X	X	
L	Tropic Turquoise	X					X	X	
M	Autumn Bronze	X			X			X	X
N	Burgundy Mist	X				X		X	
R	Target Red	X				X		X	
T	Sierra Mist	X			X			X	X
V	Almond Beige	X			X			X	X
W	Silver Mist	X		X			X	X	

If car is ordered with hub caps, wheel color will be the same as lower body color.

Wheels will be painted Ebony Black (A) if any wheel disc is ordered.

6-16-65 Added sales names for L,M,T & W.

0-1.17B

CHART:	PAINT & TRIM SPECIFICATIONS
ISSUED BY:	G. T. JONES
DATE: 4-21-65	DWG. BY: R. DUSTAN
SHEET NO.: 3	PART NO.: 393186

TRIM USAGE WITH TWO-TONE PAINT

Note: Two-tone paint is available on all models except convertible.

			TRIM COLORS							
			Black	Green	Blue	Fawn	Red	Turquoise	Parchment	Bronze
AC	Ebony Black	Provincial White	X						X	
AD	Ebony Black	Lucerne Mist	X		X					
AK	Ebony Black	Ocean Mist	X					X		
AW	Ebony Black	Silver Mist	X		X					
BC	Nocturne Mist	Provincial White			X				X	
BD	Nocturne Mist	Lucerne Mist			X					
BW	Nocturne Mist	Silver Mist			X					
DC	Lucerne Mist	Provincial White			X				X	
DE	Lucerne Mist	Royal Mist			X					
EC	Royal Mist	Provincial White			X				X	
EW	Royal Mist	Silver Mist			X					
HC	Laurel Mist	Provincial White		X					X	
HJ	Laurel Mist	Forest Mist		X						
JC	Forest Mist	Provincial White		X					X	
KC	Ocean Mist	Provincial White						X	X	

6-16-65 Added sales name for W. 10-15-65 Added two-tone paint availability for Vista-Cruisers. 0-1.17C
10-28-65 Revised note to include regular wagons.

CHART: PAINT & TRIM SPECIFICATIONS	
ISSUED BY: G.T. JONES	
DATE: 4-21-65	DWG. BY: R. DUSTAN
SHEET NO.: 4	PART NO.: 393186

TRIM USAGE WITH TWO-TONE PAINT

Note: Two-tone paint is available on all models except convertible.

			TRIM COLORS							
			Black	Green	Blue	Fawn	Red	Turquoise	Parchment	Bronze
KL	Ocean Mist	Tropic Turquoise						X		
LC	Tropic Turquoise	Provincial White						X	X	
MC	Autumn Bronze	Provincial White							X	X
MV	Autumn Bronze	Almond Beige				X				X
NC	Burgundy Mist	Provincial White					X		X	
NV	Burgundy Mist	Almond Beige				X	X			
RC	Target Red	Provincial White					X		X	
TC	Sierra Mist	Provincial White				X			X	
TV	Sierra Mist	Almond Beige				X				
VC	Almond Beige	Provincial White				X			X	
WC	Silver Mist	Provincial White			X				X	
WL	Silver Mist	Tropic Turquoise						X		

If car is ordered with hub caps, wheel color will be same as lower body color. Wheels will be painted Ebony Black (A) if any wheel disc is ordered.

6-16-65 Added sales names for L,M,T & W. 9-16-65 Added "except station wagons" to note at top of page. 10-15-65 Added two-tone paint availability for Vista-Cruisers. 10-28-65 Revised note to include regular wagons.

CHART: PAINT & TRIM SPECIFICATIONS	
ISSUED BY: G.T. JONES	
DATE: 4-21-65	DWG. BY: R. DUSTAN
SHEET NO.: 4A	PART NO.: 393186

TRIM COMBINATION CHART

	Series & Styles	TRIM COLORS & NUMBERS							
		Black	Green	Blue	Fawn	Red	Turquoise	Parchment	Bronze
33369-33469	4 Door Sedan			923	924	935v	936v		
33307-33407	Club Coupe			923	934v	935v	936v		
33335-33435	2 Seat Station Wagon			933v	934v	935v			
33455	Std. 2 Seat Vista Cruiser			933v	934v	935v	936v		
33465	Std. 3 Seat Vista Cruiser			933v	934v	935v	936v		
33569-33669	4 Door Sedan		952v	953v	944	955v	946		
33539-33639	Holiday Sedan	950v		953v	944	955v	946		
33517-33617	Holiday Coupe	990v		993v	944	995v	946		
33535-33635	2 Seat Station Wagon	950v		953v	954v	955v			
33869	4 Door Sedan		972	973	974v		976		978v
33839	Holiday Sedan	900v		903		905v	906		908
33807	Sport Coupe (bucket)	960v		963v		965v		967v	
33807	Sport Coupe (bench)	990v		993v	944	995v	946		
33817	Holiday Coupe (bucket)	980v		983v		985v		987v	
33817	Holiday Coupe (bench)	080v							088v
33867	Convertible (bucket)	980v		983v		985v		987v	
33867	Convertible (bench)	080v							088v
33855	Custom 2 Seat Vista Cruiser	970v		973	974v		976		978v
33865	Custom 3 Seat Vista Cruiser	970v		973	974v		976		978v

0-1.17E

CHART: PAINT & TRIM SPECIFICATIONS	
ISSUED BY: G. T. JONES	
DATE: 4-21-65	DWG. BY: R. DUSTAN
SHEET NO.: 5	PART NO.: 393186

MISCELLANEOUS TRIM MATERIALS

CONVERTIBLE TOPS:

Code	Top Material	Exterior Color Usage
1	White 296-T-1561	Available with all colors.
2	Black 175-T-1559	Available with all colors.
4	Med. Blue 427-T-1565	Available with A,B,C,D,E & W.
6	Beige 460-T-1566	Available with A,C,E,H,J,L,M,N,R,T & V.

VINYL COVERED ROOF:

Available on 33839 only (Available on 33307,33407,33517,33617,33807 and 33817 after December 1, 1965)

Color	Top Material	Exterior Color Usage
Black	375-T-1563	Available with all colors.
Beige	454-T-1565	Available with A,C,E,H,J,L,M,N,R,T & V.

CONSOLES:

Colors	Carpet	Painted Body	Trim Combination Usage	
			33807	33817,33867
Black	1083-T-1065	W-848	960,967	980,987
Midn. Blue	1086-T-1065	W-3302	963	983
Dk. Maroon	1202-T-1066	W-3496	965	985

Ribbed portion of die cast console upper and glove box door are Code 361, Flat Black.

AUXILIARY FLOOR MATS:

Colors	Trim Combination Usage
Black	080,900,950,960,970,967,980,987,990
Midn. Green	952,972
Midn. Blue	903,923,933,953,963,973,983,993
Dark Fawn	924,934,944,954,974
Dark Maroon	905,935,955,965,985,995
Dark Turquoise	906,936,946,976
Dark Bronze	088,908,978

6-16-65 Corrected code numbers for convertible top colors. Changed code number for console paint. 10-15-65 Added model availability for vinyl roof cover. 11-1-65 Changed availability date for vinyl roof cover. 0-1.17F

CHART: PAINT & TRIM SPECIFICATIONS	
ISSUED BY: G. T. JONES	
DATE: 4-21-65	DWG. BY: R. DUSTAN
SHEET NO.: 6	PART NO.: 393186

MISCELLANEOUS PARTS REQUIREMENTS

The parts listed above chart will be required in the colors shown and will be used in specific models as outlined.

Upper Instrument Panel (WOA)
Tachometer Assembly-6412739 (see drawing below)(WOA)
Cover-Instrument Panel Steering Column (WOA)
Radio Speaker Grille-Exc. Station Wagon (WOA)

Pad-Instrument Panel Safety-Moulded Vinyl to Match WOA
Door-Glove-Box-Moulded Vinyl to Match WOA
Console Body (W60A)

	Series & Models	Colors & Trim Usage						
		Black W848	Midn. Green W3304	Midn. Blue W3302	Midn. Fawn W3321	Dk. Maroon W3496	Dk. Turq. W3483	Dk. Bronze W3488
33300 33400	33369-33469			923	924	935	936	
	33307-33407			923	934	935	936	
	33335-33435			933	934	935		
	33455-33465			933	934	935	936	
33500 33600	33569-33669		952	953	944	955	946	
	33539-33639	950		953	944	955	946	
	33517-33617	990		993	944	995	946	
	33535-33635	950		953	954	955		
33800	33869		972	973	974		976	978
	33839	900		903		905	906	908
	33807 * Bucket seat trim	960* 967* 990		963* 993	944	965* 995	946	
	33817 * Bucket seat trim	980* 987* 080		983*		985*		088
	33867 * Bucket seat trim	980* 987* 080		983*		985*		088
	33855-33865	970		973	974		976	978

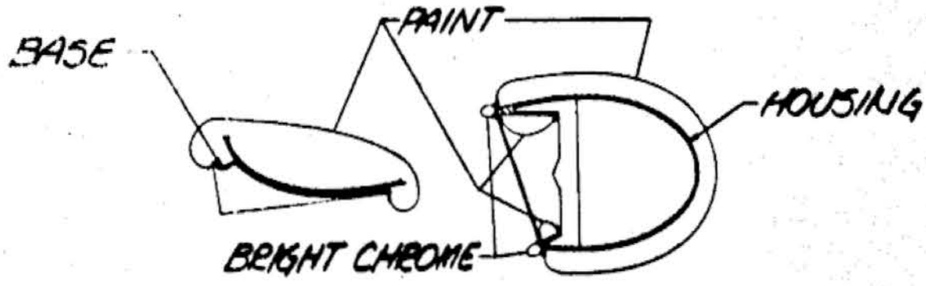

6412739-ELECTRIC TACHOMETER ASSEMBLY

6-16-65 Corrected W number for Midnight Fawn. Removed rear window defogger grille from parts list.
9-16-65 Added Tachometer assembly. Removed hard plastic I.P. upper.

0-1.17G

CHART: PAINT & TRIM SPECIFICATIONS	
ISSUED BY: G. T. JONES	
DATE: 4-21-65	DWG. BY: R. DUSTAN
SHEET NO.: 7	PART NO.: 383186

MISCELLANEOUS PARTS REQUIREMENTS

The parts listed above chart will be required in the colors shown and will be used in specific models as outlined.

1. Lower Instrument Panel (W60A)
2. Jacket-Steering Column (W60DE-W60A)
3. Turn Signal Housing (W60DE-W60A)
4. Housing-Transmission Control (W60DE-W60A)
5. Cover-Steering Column (W60DE-W60A)
6. Cover-Steering Column Lower (W60DE-W60A)
7. Steering Wheel-Standard-Painted (W60DE)
8. Steering Wheel-Deluxe-Plastic
9. Rear Radio Speaker Grille-Station Wagons Only (W60A)
10. Ash Tray Door (W60A)

Note:
Numbers 2-6 and 10 must be painted with the same material (all lacquer or all enamel).

	Series & Models	Colors & Trim Usage						
		Black W848	Med. Green W3303	Med. Blue W3301	Med. Fawn W3484	Med. Red W3309	Med. Turq. W3305	Med. Bronze W3487
33300 33400	33369-33469			923	924	935	936	
	33307-33407			923	934	935	936	
	33335-33435			933	934	935		
	33455-33465			933	934	935	936	
33500 33600	33569-33669		952	953	944	955	946	
	33539-33639	950		953	944	955	946	
	33517-33617	990		993	944	995	946	
	33535-33635	950		953	954	955		
33800	33869		972	973	974		976	978
	33839	900		903		905	906	908
	33807 * Bucket seat trim	960* 967* 990		963* 993	944	965* 995	946	
	33817 * Bucket seat trim	980* 987* 080		983*		985*		088
	33867 * Bucket seat trim	980* 987* 080		983*		985*		088
	33855-33865	970		973	974		976	978

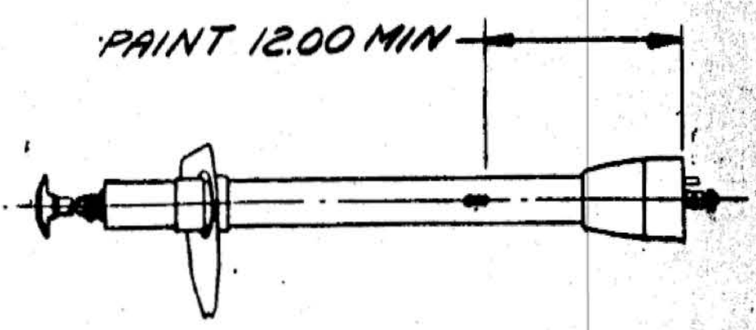

STEERING COLUMN PAINT

6-16-65 Changed all 40° to 60°. Added item 10 to list. Corrected terminology of items 3 & 6.

0-1.17H

CHART: PAINT & TRIM SPECIFICATIONS	
ISSUED BY: G. T. JONES	
DATE: 4-21-65	DWG. BY: R. DUSTAN
SHEET NO.: 8	PART NO.: 393186

MISCELLANEOUS PARTS REQUIREMENTS

The parts listed above chart are required in the colors shown and will be used in specific models as outlined.

Front & Rear Door Inner Panel (W60A)
Rear Quarter Panel (W60A)
Garnish Mouldings (W60A)
Windshield Pillar Side Inner Frame (W60A)
Door Window Frames - Sedans & Wagons (W60A)
Center Pillar-Sedans & Wagons (W60A)

		Colors & Trim Usage							
Series & Models		Black W848	Med. Green W3303	Med. Blue W3301	Med. Fawn W3484	Med. Red W3304	Med. Turq. W3305	Parchment W2921	Med. Bronze W3487
33300 33400	33369-33469			923	924	935	936		
	33307-33407			923	934	935	936		
	33335-33435			933	934	935			
	33455-33465			933	934	935	936		
33500 33600	33569-33669		952	953	944	955	946		
	33539-33639	950		953	944	955	946		
	33517-33617	990		993	944	995	946		
	33535-33635	950		953	954	955			
33800	33869		972	973	974		976		978
	33839	900		903		905	906		908
	33807 * Bucket seat trim	960* 990		963* 993	944	965* 995	946	967*	
	33817 * Bucket seat trim	980* 080		983*		985*		987*	088
	33867 * Bucket seat trim	980* 080		983*		985*		987*	088
	33855-33865	970		973	974		976		978

CHART: PAINT & TRIM SPECIFICATIONS	
ISSUED BY: G. T. JONES	
DATE: 4-21-65	DWG. BY: R. DUSTAN
SHEET NO.: 9	PART NO.: 393186

THE SUB ASSEMBLIES, AS SHIPPED FOR FINAL ASSEMBLY, WILL BE DEHYDRATED, LEAK TESTED, AND CAPPED. THE COMPRESSOR WILL CONTAIN A HOLDING CHARGE.

FOLLOWING IS A LIST OF PRECAUTIONARY MEASURES TO BE TAKEN PRIOR TO AND DURING ASSEMBLY OPERATIONS OF THE FINAL UNIT, AND TESTING REQUIREMENTS.

"A" GENERAL PRECAUTIONS

1. ALL SUB ASSEMBLIES SHIPPED DEHYDRATED AND SEALED TIGHT ARE TO REMAIN SEALED UNTIL JUST PRIOR TO MAKING CONNECTIONS.
2. ALL SUB ASSEMBLIES SHOULD BE AT ROOM TEMPERATURE BEFORE UNCAPPING. THIS PREVENTS THE ENTRANCE OF AIR INTO THE SYSTEM AND FORMING CONDENSATION.
3. IF FOR ANY REASON THE CAPS REMOVED DURING ASSEMBLY OPERATION AND CONNECTIONS ARE NOT MADE, THE TUBES SHOULD NOT REMAIN UNSEALED FOR A PERIOD OF MORE THAN FIFTEEN (15 MINUTES). RESEAL, IF PERIOD IS LONGER.
4. RECEIVER DEHYDRATOR SHOULD NEVER BE LEFT UNCAPPED MORE THAN 5 MINUTES.
5. (E) COMPRESSORS ARE SHIPPED WITH TEN AND ONE HALF (10.5) FLUID OUNCES OF OIL AND A 2 OZ. HOLDING CHARGE OF 80% NITROGEN AND 20% REFRIGERANT 12.
6. AT NO TIME SHOULD THE COMPRESSOR SHAFT BE ROTATED UNTIL THE COMPLETE SYSTEM IS ASSEMBLED AND CHARGED WITH REFRIGERANT 12.
7. DURING ALL OPERATIONS, NECESSARY PRECAUTION SHOULD BE TAKEN TO KEEP THE SYSTEM CLEAN AND DRY. PREVENT ANY DIRT OR MOISTURE FROM GETTING ON OR IN THE CONNECTIONS. IT IS PARTICULARLY IMPORTANT THAT NO DIRT OR MOISTURE GET WITHIN THE SYSTEM.

"B" ASSEMBLY

1. ALL PRECAUTIONS SHOULD BE TAKEN TO PREVENT DAMAGE TO FITTINGS OR CONNECTIONS. EVEN MINUTE DAMAGE TO THE CONNECTION COULD CAUSE IT TO LEAK.
2. ANY FITTINGS GETTING GREASE OR DIRT ON THEM SHOULD BE WIPED CLEAN WITH AN ALCOHOL DAMPENED CLOTH. DO NOT USE CHLORINATED SOLVENTS FOR A CLEANING AGENT, AS THEY ARE CONTAMINANTS. IF DIRT, GREASE, OR MOISTURE GET INSIDE THE PIPES AND CANNOT BE REMOVED, THE PIPE IS TO BE REPLACED.
3. SEALING CAPS SHOULD BE REMOVED FROM SUB ASSEMBLIES JUST PRIOR TO MAKING CONNECTIONS FOR FINAL ASSEMBLY.
4. DISCARD "O" RINGS ON PIPES. INSTALL NEW "O" RINGS COATED WITH CLEAN COMPRESSOR OIL ON PIPE ENDS. KEEP OIL CONTAINER SEALED.
5. MANDATORY, WHEN TIGHTENING OR LOOSENING PIPE FITTINGS, ALWAYS USE TWO (2) WRENCHES, USE AN OPEN END WRENCH TO HOLD THE SEAT STATIONARY.
6. (A) TORQUE "SUCTION AND DISCHARGE HOSE ASSEMBLY" ATTACHING BOLT ON COMPRESSOR TO 20-25 LB. FT. FOR F-85 & B/C (15 - 20 LB. FT. FOR E).
7. SET COMPRESSOR BELT TENSION WITH BURROUGHS BELT GAGE #33-70.
8. CHECK AIR GAP BETWEEN CLUTCH ARMATURE PLATE AND PULLEY. CAP SHOULD BE .022 - .057.
9. IN ASSEMBLY, CARE MUST BE EXERCISED TO BE SURE THAT PIPES ARE NOT BENT OR MUTILATED THROUGH CARELESSNESS, OR DELIBERATELY BENT TO FACILITATE ANOTHER OPERATION.
10. FLEXIBLE HOSES ARE TO BE ROUTED AND FITTINGS ARE TO BE TIGHTENED SO THAT HOSES ASSUME NATURAL CURVES, FREE OF TWIST OR STRAIN.
11. COMPLETED SYSTEMS ARE TO BE CHECKED FOR PIPES GROUNDING OUT ON SHEET METAL COMPONENTS. ANY DIRECT CONTACT OF PIPES AND SHEET METAL PARTS IS TO BE ELIMINATED.

"C" LEAK TESTING

1. INSTALL CHARGING MANIFOLD GAUGE SET LINES TO GAUGE FITTINGS ON FREEZE CONTROL VALVE AND DISCHARGE HOSE ASSEMBLIES. (PURGE LINES BEFORE CONNECTING TO SYSTEM).
2. OPEN GAUGE VALVES, PULL VACUUM UNTIL 28" VACUUM IS OBTAINED. CLOSE VACUUM PUMP VALVE AND STOP PUMP. OBSERVE GAUGE: IF LOSS OF VACUUM OCCURS, A LEAK IS IN SYSTEM. CHECK ALL CONNECTIONS IN SYSTEM FOR TIGHTNESS, ADD SMALL AMOUNT OF REFRIGERANT 12 to SYSTEM. CHECK FOR LEAK WITH G.E. ELECTRONIC DETECTOR OR EQUIV. REGULAR MAINTENANCE AND PERIODIC CHECKS FOR SENSITIVITY LEVEL ARE A MUST. TWICE PER SHIFT--ONCE EVERY (4) HOURS IS RECOMMENDED. CORRECT LEAK, REPEAT PROCEDURE UNTIL ALL LEAKS ARE CORRECTED.
3. (A) PULL VACUUM FOR CHARGING PROCEDURE TO 29". (SUBTRACT 1.00" HG. FOR EACH 1000' OF ALTITUDE) (EXAMPLE FOR 5000' USE 23" HG.).

"D" CHARGING SYSTEM

1. ALWAYS PURGE CHARGING LINES BEFORE PERMITTING CHARGE TO ENTER SYSTEM.
2. CHARGING SHOULD BE DONE AT 70° F. MINIMUM TEMPERATURE.
3. WITH ALL LEAKS CORRECTED AND VACUUM HELD IN SYSTEM TO 28", CHARGE SYSTEM WITH INITIAL CHARGE OF REFRIGERANT 12.
4. * CLOSE HIGH PRESSURE LINES ON GAUGE SET.
5. (A) START ENGINE OR AUXILIARY POWER AND OPERATE AT SPEED CORRESPONDING TO 1500 ENGINE R.P.M. NORMAL CONTROL POSITION MUST BE SELECTED AND CONTROL MUST BE SET TO FULL COLD POSITION AND FAN POSITION AS SHOWN BELOW DEPENDING ON THE ATMOSPHERIC TEMPERATURE.

ATMOSPHERIC TEMPERATURE °F.	FAN SWITCH POSITION	
70 - 80°	HIGH	OR AUTOMATIC
80 - 90°	MEDIUM	OR AUTOMATIC
90°	LOW	OR AUTOMATIC

(B) CHARGE UNTIL LIQUID LINE INDICATOR SHOWS CLEAR. THAN ADD ONE QUARTER (1/4) POUND.

(C)(D) REFRIGERANT 12 CHARGE: F85-V8-3.25#, B/C & E-4.00#, F85-L6-3.00#.

6. SHUT OFF ENGINE AND DISCONNECT CHARGING LINES. INSTALL CAPS ON SERVICE VALVES.
7. MAKE FINAL CHECK FOR LEAKS AT THIS TIME. MAXIMUM LEAK RATE: ONE (1) POUND IN FIFTY (50) YEARS AT ALL POINTS EXCEPT COMPRESSOR SEAL WHERE A LEAK RATE OF ONE (1) POUND IN FIFTEEN (15) YEARS WILL BE ACCEPTABLE.

* NOT REQUIRED IF EQUIPMENT IS USED TO FORCE COMPLETE CHARGE INTO SYSTEM.

SHEET 1 OF 2

DATE	SYM	REVISION	DR.	CK.	DATE	SYM	REVISION	DR.	CK.	DATE	SYM	REVISION	DR.	CK.
										10-19-65	E	20% WAS 25%	CG	KG
										6-22-65	D	NOTE REVISED	JJ	JP
										5-1-65	C	NOTE REVISED	DS	JP
										4-29-65	B	NOTE REVISED	JJ	JP
										3-5-65	A3	NOTE REVISED	DS	JP

CHART AIR CONDITIONING PROCEDURE

DATE FEB. 22, 1965
DR. BY J. D. SMITH
CHECKED
APPR. K. S. Thalmann
APPR.

FIRST USED 1966
Oldsmobile Service ILLUSTRATION
SERIES A-B-C-E
REF.
PAGE 0-L 18
PART NO. 392393

"E" VALVE CHECKS AND CORRECTIVE ADJUSTMENT

1. SUCTION THROTTLING VALVE
   - A. THE PROPER CONTROL ACTION OF THE VALVE IS TO BE CHECKED AS FOLLOWS:
     1. CONNECT PRESSURE GAUGE TO FITTING PROVIDED ON SUCTION THROTTLING VALVE.
     2. RUN ENGINE AT 2000 R. P. M., INSTRUMENT PANEL TEMP. CONTROL HELD TO FULL COLD POSITION.
     3. WHEN VALVE STARTS TO CONTROL, GAUGE POINTER WILL DIP SLIGHTLY BELOW OPERATING PRESSURE AND THEN RISE AND HOLD AT OPERATING PRESSURE. OBSERVE OPERATING PRESSURE, WHICH SHOULD BE 29-30 P. S. I. (@900' ALTITUDE) THREE (3) MINUTES AFTER VALVE HAS STARTED TO CONTROL.
   - B. THE VALVE IS NOT ADJUSTABLE EXTERNALLY.
2. PRESSURE GAUGES
   - A. IT IS IMPORTANT THAT ALL PRESSURE GAUGES USED TO CHECK VALVE OPERATION BE CHECKED AT PERIODIC INTERVALS FOR ACCURACY. (WEEKLY INTERVALS SUGGESTED). GAUGES MUST BE OF THE PROPER RANGE FOR READING ACCURACY (0-60 RECOMMENDED FOR EVAPORATOR BACK PRESSURE).

"F" COMPRESSOR OIL LEVEL CHECK (SEE ITEM "G" 1. B BELOW)

CHECK THE OIL LEVEL IN THE COMPRESSOR BY DRAINING AND MEASURING THE AMOUNT OF OIL. DO NOT ATTEMPT TO CHECK THE OIL LEVEL BY PARTIALLY UNSCREWING THE OIL FITTING AT THE BOTTOM OF THE COMPRESSOR.

"G" REPLACEMENT OF COMPONENTS AFTER THE SYSTEM HAS BEEN CHARGED AND OPERATED.

1. COMPRESSOR
   - A. DRAIN AND ACCURATELY MEASURE THE AMOUNT OF OIL IN THE DEFECTIVE COMPRESSOR. DO NOT RECHARGE THE COMPRESSOR WITH OIL IF IT WILL BE RETURNED TO VENDOR.
   - B. EXAMINE OIL FROM DEFECTIVE COMPRESSOR FOR IMPURITIES. IF OIL CONTAINS METALIC PARTICLES, ALL LINES MUST BE PURGED AND EXPANSIONS VALVE AND RECEIVER-DEHYDRATOR CHANGED. (REFERENCE FOLLOWING ITEM C-2).
   - C. DRAIN ALL OIL FROM THE NEW COMPRESSOR.
   - D. RECHARGE THE NEW COMPRESSOR WITH THE SAME AMOUNT OF OIL THAT WAS DRAINED FROM THE DEFECTIVE COMPRESSOR.
   - E. THIS PROCEDURE IS REQUIRED TO INSURE THAT THE COMPLETE SYSTEM IS NOT OVERCHARGED WITH OIL WHICH WILL HAPPEN IF A NEW COMPRESSOR WITH A FULL OIL CHARGE IS INSTALLED.
2. OTHER COMPONENTS
   - A. OPERATE THE SYSTEM AT IDLE SPEED FOR APPROXIMATELY FIVE MINUTES TO RETURN AS MUCH OIL AS POSSIBLE TO THE COMPRESSOR CRANKCASE PRIOR TO REPLACEMENT OF A COMPONENT.
   - B. ADDITIONS OF OIL INTO NEW COMPONENTS SHALL BE MADE IMMEDIATELY PRIOR TO ASSEMBLY OF THE COMPONENT INTO THE CAR. THE OIL SHALL BE ADDED IN SUCH A MANNER THAT THERE WILL BE NO LOSS OF OIL WITH THE COMPONENT IN ITS NORMAL POSITION ON THE CAR. WHEN IT IS DESIRABLE, THE OIL MAY BE ADDED DIRECTLY TO THE COMPRESSOR INSTEAD OF THE COMPONENT.
   - C. OIL REQUIRED
     1. EVAPORATOR - 3 FLUID OUNCES.
     2. RECEIVER-DEHYDRATOR - 1 FLUID OUNCE.
     3. CONDENSER RECEIVER-DEHYDRATOR - 3 FLUID OUNCES.

PIPE CONNECTING NUT TORQUE: "O" RING TYPE CONNECTORS REFER TO HOSE PIPE & CABLE DRAWINGS FOR SPECIFIC
(B) TORQUE.
HOSE CLAMP TORQUE: - 40 IN. /LB.

"H" PERFORMANCE TEST

1. TEST WITH HOOD UP, DOORS OPEN, CONTROL LEVER TO FULL LEFT AND "NORMAL" BUTTON ENGAGED - FAN ON HIGH AND TRANSMISSION IN NEUTRAL.
2. USE AUXILIARY AIR VELOCITY OF 1100 FEET PER MINUTE INTO CONDENSER.
3. ATMOSPHERIC AIR TEMPERATURE AND RELATIVE HUMIDITY TO BE TAKEN AT FRONT OF CONDENSER.
4. THE AIR VOLUME FROM BOTH OUTER NOZZELS SHOULD BE APPROXIMATELY EQUAL. IF NOT, CHECK AIR HOSES FOR OBSTRUCTION AND PROPER INSTALLATION.
5. ADJUST ENGINE R. P. M. TO MAINTAIN 2000 R. P. M.

SHEET 2 OF 2

DATE	SYM	REVISION	DR.	CK.	DATE	SYM	REVISION	DR.	CK.	DATE	SYM	REVISION	DR.	CK.
										8-3-65	B	TORQUE CHART REMOVED		JEG
										7-9-65	A	NOTE REVISED		JJR

CHART AIR CONDITIONING PROCEDURE

DATE 7-23-1965 DR. BY J.D. SMITH CHECKED [illegible] APPR. [illegible] APPR.

FIRST USED 1966 Oldsmobile ILLUSTRATION

SERIES A-B-C-E REV.

PAGE 0-1.19

PART NO. 392393

OLDSMOBILE DIVISION GENERAL MOTORS CORPORATION LANSING — MICHIGAN

TYPICAL TEST DATA FOR 1966 "K"-3400-3400-3800 V8 ONLY (D)

IN FRONT OF CONDENSER RELATIVE HUMIDITY	AIR TEMP. °F.	EVAPORATOR PRESSURE AT SUCTION THROTTLING VALVE (E) (C) ±1 PSI	ENGINE R.P.M.	DISCHARGE AIR TEMP. R.H. NOZZEL (E) (B) ±2°F.	PRESSURE HIGH (DISCHARGE) (E) (B) ±20 PSI
20	60	29	2000	38	150
	70	29		40	180
	80	29		41	205
	90	29		45	230
	100	29		54	280
	110	36.5		72	345
30	60	29	2000	38	151
	70	29		40.5	183
	80	29		43	210
	90	29		49	240
	100	30		63	292
	110	36		77	355
40	60	29	2000	38	153
	70	29		42	185
	80	29		45	216
	90	29		53	250
	100	33		67	305
	110	42		81	365
50	60	29	2000	38.5	155
	70	29		43	188
	80	29		47	221
	90	29		54	260
	100	34		71	318
	110	46		85	375
60	60	29	2000	39	163
	70	29		43.5	190
	80	28		50	226
	90	31		61	270
	100	36		75	330
70	60	29	2000	39.5	173
	70	29		44	192
	80	29		52.5	233
	90	29		65	280
	100	42		79	342
80	60	29	2000	40	180
	70	29		45	195
	80	30		54.5	237
	90	37		69	291
	100	46		83	354
90	60	29	2000	41	188
	70	29		45.5	197
	80	33		55	243
	90	40		72	301
	100	49		87	367

VB ONLY

SHEET 1 OF 2

(A) FOR AIR CONDITIONING PROCEDURE, SEE CHART #392593, SHEETS 1 & 2 - PAGES 0-L.18 & 0-L.19.

DATE	SYM	REVISION	DR.	CK.	DATE	SYM	REVISION	DR.	CK.	DATE	SYM	REVISION	DR.	CK.
										5-12-65	E	COLUMN REVISED	JJ	JP
										4-29-65	D	WAS V8 AND L6	OG	JP
										3-5-65	C	TOLERANCE ADDED	DS	JP
										3-5-65	B2	TOLERANCE REVISED	DS	JP
										3-5-65	A	NOTE REMOVED	DS	JP

CHART **AIR CONDITIONING TEST DATA**

DATE FEB. 22, 1965 — CHART YEAR 1966 — Oldsmobile Service ILLUSTRATIONS — PAGE 0-L.20

DR. BY J. D. SMITH — SERIES A — REV.

CHECKED Parker — APPR. K. G. Hollingshead — APPR. — PART NO. 392541

TYPICAL TEST DATA FOR 1966 "A" - 3300 & 3500
L6 ONLY

SHEET 2 OF 2

L6 ONLY

IN FRONT OF CONDENSER		EVAPORATOR PRESSURE AT SUCTION THROTTLING VALVE ± PSI	ENGINE R.P.M.	DISCHARGE AIR TEMP. R.H. NOZZEL ± 2° F.	PRESSURE HIGH (DISCHARGE) ± 20 PSI
RELATIVE HUMIDITY	AIR TEMP. °F.				
20	60	29	2000	38	145
	70	29		40	166
	80	29		41	202
	90	29		45	255
	100	29		48	310
	110	35		56.5	360
30	60	29	2000	38	146
	70	29		40	174
	80	29		42	215
	90	29		47	266
	100	32		53	326
	110	43		64	390
40	60	29	2000	38	148
	70	29		40	180
	80	29		43	228
	90	29		49	276
	100	37		58	346
	110	50		68	420
50	60	29	2000	38.5	150
	70	29		40	188
	80	29		44.5	242
	90	29		52.5	293
	100	42		63.5	363
	110	58		72	440
60	60	29	2000	39	158
	70	29		40.5	195
	80	29		48	257
	90	34		56.5	310
	100	46		68	385
70	60	29	2000	39	168
	70	29		42	202
	80	29		51	273
	90	38.5		60.5	327
	100	50		72	405
80	60	29	2000	39.5	175
	70	29		43	209
	80	31		54.5	288
	90	43.5		64	344
	100	54		76	420
90	60	29	2000	40	183
	70	29		44.5	216
	80	36		57.5	304
	90	48		68	361
	100	58		80	440

FOR AIR CONDITIONING PROCEDURE, SEE CHART #392393, SHEETS 1 & 2 - PAGES 0-L 18 & 0-L 19.

CHART AIR CONDITIONING TEST DATA

DATE APRIL 26, 1965
DR. BY C. GORDON
CHECKED
APPR.
APPR.

PRINT USED 1966
SERIES A
REV.
PAGE 0-L 23
PART NO. 392541

DR. CK. DATE SYM. REVISION

OLDSMOBILE DIVISION GENERAL MOTORS CORPORATION LANSING — MICHIGAN

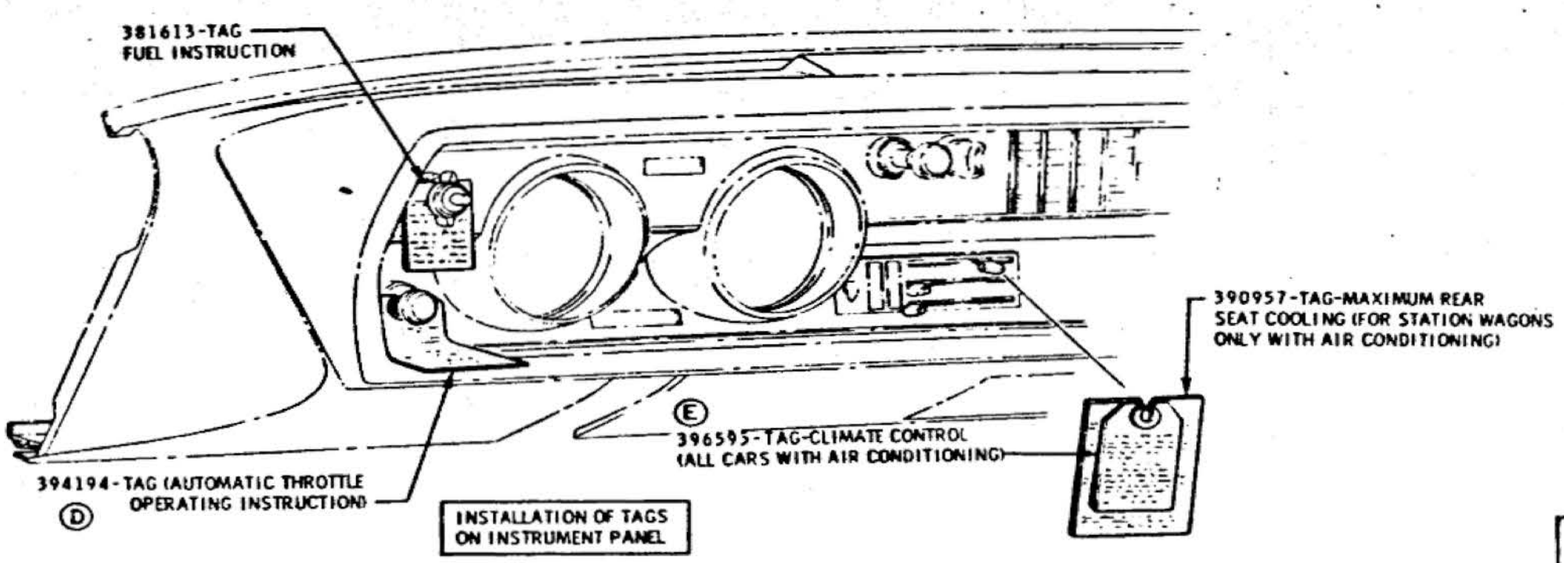

INSTALLATION OF TAGS ON INSTRUMENT PANEL

MATERIALS TO BE PLACED IN GLOVE BOX, IF APPLICABLE	
PART NUMBER	DESCRIPTION
392091	OWNERS OPERATION MANUAL
392090 578836	BOOK - OWNER PROTECTION PLATE - SEE PAGE 0-1.2
* 7002202	KEY - DOOR & IGNITION
* 7002232	KEY - GLOVE BOX & TRUNK
4226803	POWER FOLDING TOP GUIDE BOOK (CONVERTIBLES ONLY)
383508	LICENSE PLATE PARTS PACKAGE (EXCEPT S. W.)
383509	LICENSE PLATE PARTS PACKAGE (S. W.)
* 9423344	VALVE EXTENSION

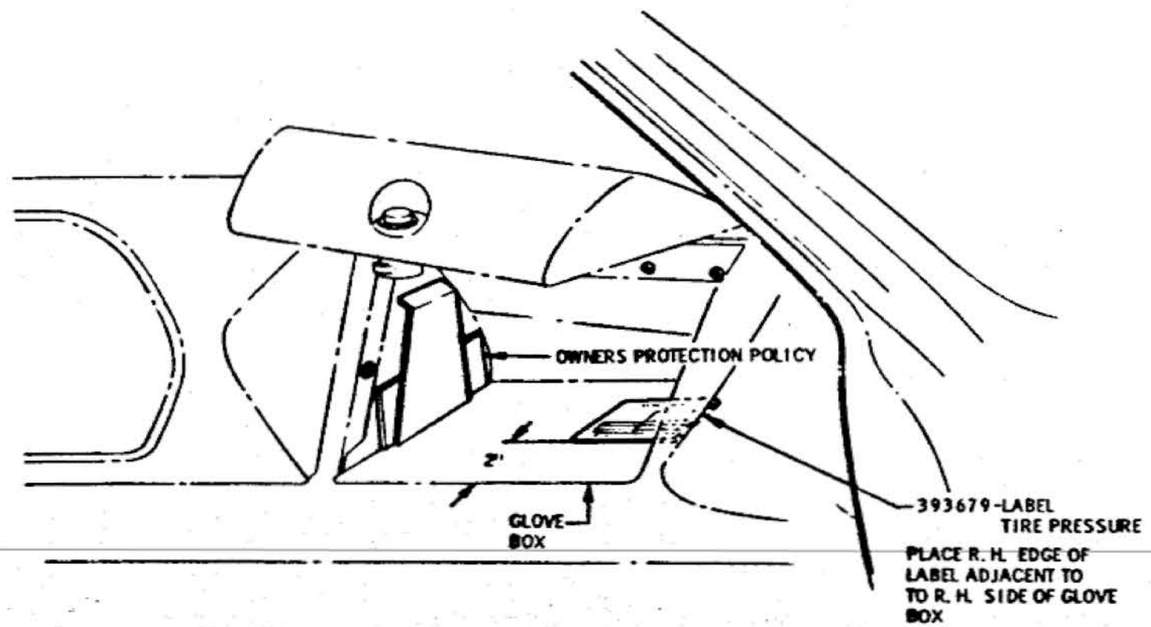

© * INSERT THESE ITEMS TOGETHER IN 409044-ENVELOPE

TAG & LABEL LOCATIONS

DATE	SYM	REVISION	DR.	CK.	DATE	SYM	REVISION	DR.	CK.	DATE	SYM	REVISION	DR.	CK.
										9-19-66	E	MAS 380005 TAG		DT
										8-20-65	D	TAG ADDED		UP
										7-30-65	C	NOTE ADDED		UP
										6-28-65	B	393679-LABEL ADDED		DT
										5-17-65	A	MAS 4225375		UP

INSTALLATION LABELS, TAGS & LOOSE PARTS

DATE APR. 24, 1965
DR. BY C. K. BEACHAM
CHECKED H. VAN PELT
APPR. K. E. H. [illegible]
APPR.

FIRST USED 1966
SECTION A
REF.
ILLUSTRATION
PAGE 0-1.22
PART NO. 589998

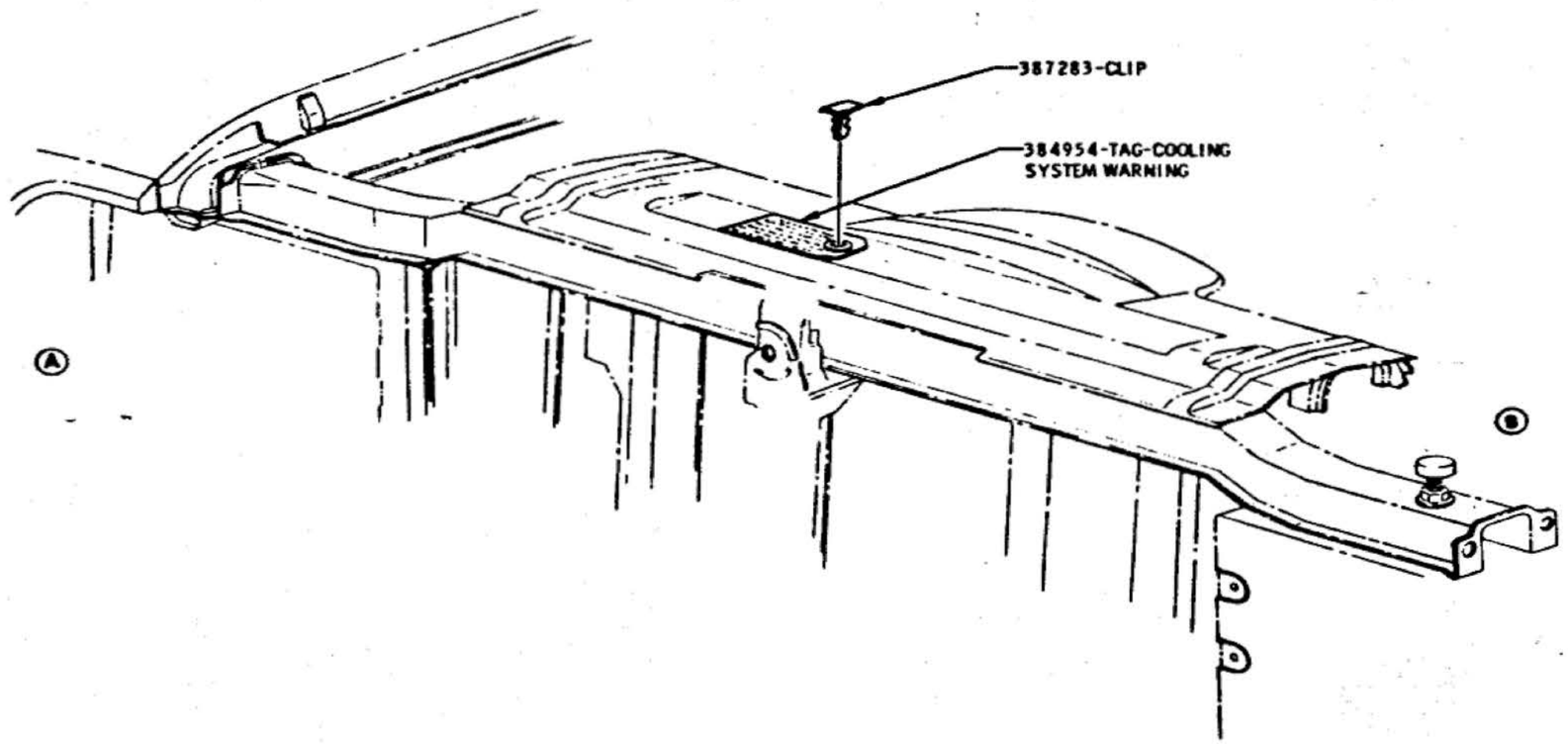

INSTALLATION OF COOLING SYSTEM WARNING TAG

DATE	SYM	REVISION	DR.	CK.	DATE	SYM	REVISION	DR.	CK.	DATE	SYM	REVISION	DR.	CK.
										5-18-65	B	V8 CHARGER LABEL REMOVED	JLG	VP
										5-12-65	A	383332-LABEL REMOVED	JLG	VP

INSTALLATION LABELS, TAGS AND LOOSE PARTS

DATE APRIL 15, 1965
DR. BY G.V. BEACKHALL
CHECKED F. JANTZ
APPR.
APPR.

FIRST USED 1966
Oldsmobile Service ILLUSTRATION
SERIES A
REF. 12A 14B
PAGE 9-1.23
PART NO. 589998

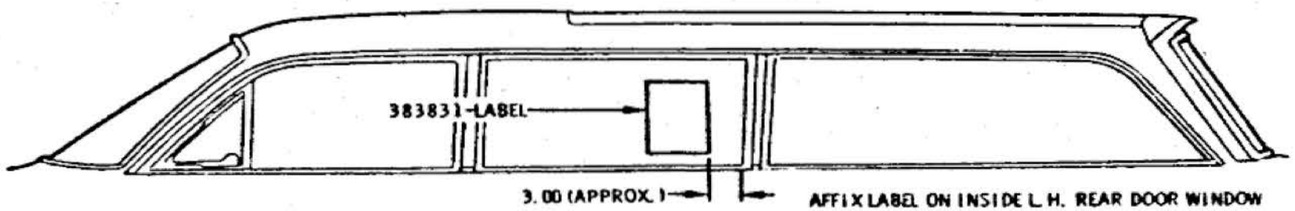

STATION WAGON MODELS

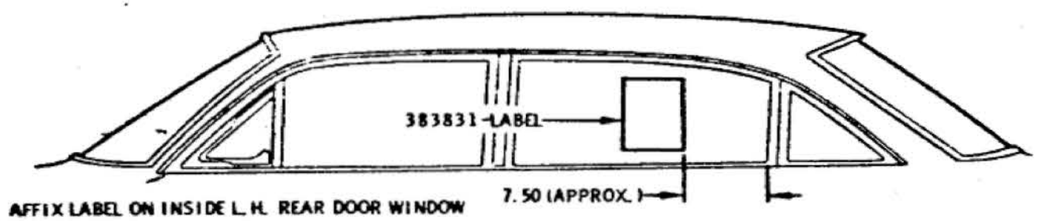

SEDAN MODELS

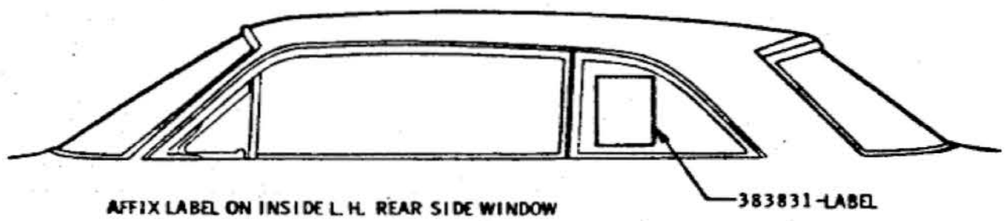

TWO DOOR COUPE MODELS & CONVERTIBLES

RETAIL PRICE LABEL

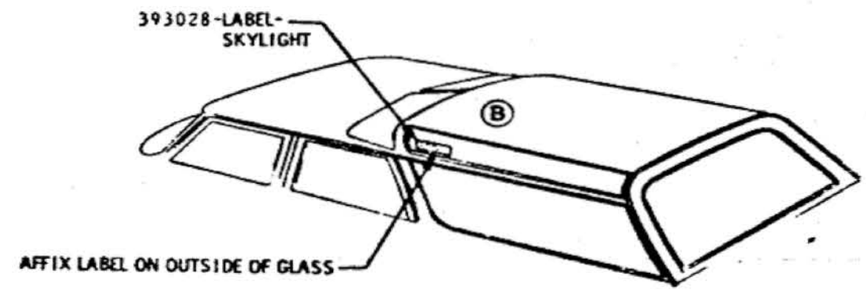

A

SKYLIGHT LABEL FOR EXTENDED WAGONS

TYPING REQUIREMENTS:

KEELOX 41-75 (BLACK) OFFSET SILK RIBBON (FOR TYPEWRITERS)

KEELOX 41-78 (BLACK) OFFSET SILK RIBBON (FOR I. B. M. TYPE TABULATING MACHINES)

RIBBON MUST BE REPLACED AS SOON AS IT STARTS TO LOSE ITS ORIGINAL DARKNESS.

IT IS ESSENTIAL THAT THE TYPING REQUIREMENTS BE STRICTLY ADHERED TO. IF THE "KEELOX" RIBBONS SPECIFIED ARE NOT USED, THERE IS THE POSSIBILITY THAT THE TYPED LETTERS WILL FADE OUT WHEN SUBJECTED TO SUNLIGHT.

METHOD OF APPLICATION:

WET LABEL, USING A POTDEVIN OR SIMILAR MACHINE CONTAINING WATER INSTEAD OF GLUE. THE LABELS ARE TO BE PASSED THROUGH THE MACHINE SO THAT THE FACE (ADHESIVE) SIDE IS MOISTENED AND THE LABEL THEN AFFIXED IN THE SPECIFIED LOCATION ACCORDING TO BODY STYLE.

AFTER LABEL IS ATTACHED TO THE INSIDE OF THE GLASS, A SQUEEGE SHOULD BE USED TO REMOVE ALL AIR POCKETS.

DATE	SYM	REVISION	DR.	CK.	DATE	SYM	REVISION	DR.	CK.	DATE	SYM	REVISION	DR.	CK.
										2-18-66	B	LABEL RELOCATED	CB	DT
										7-27-65	A	VIEW ADDED	BJ	AFL

INSTALLATION	LABELS, TAGS & LOOSE PARTS		
DATE APR. 21, 1965	FIRST USED 1966	Oldsmobile Graphic Illustration	PAGE 0-1.24
DR. BY C.V. BEACHNAU			
CHECKED H. VAN PELT	SERIES A	REF. 14E	PART NO. 589998
APPR. & NIWAKT			
APPR.			

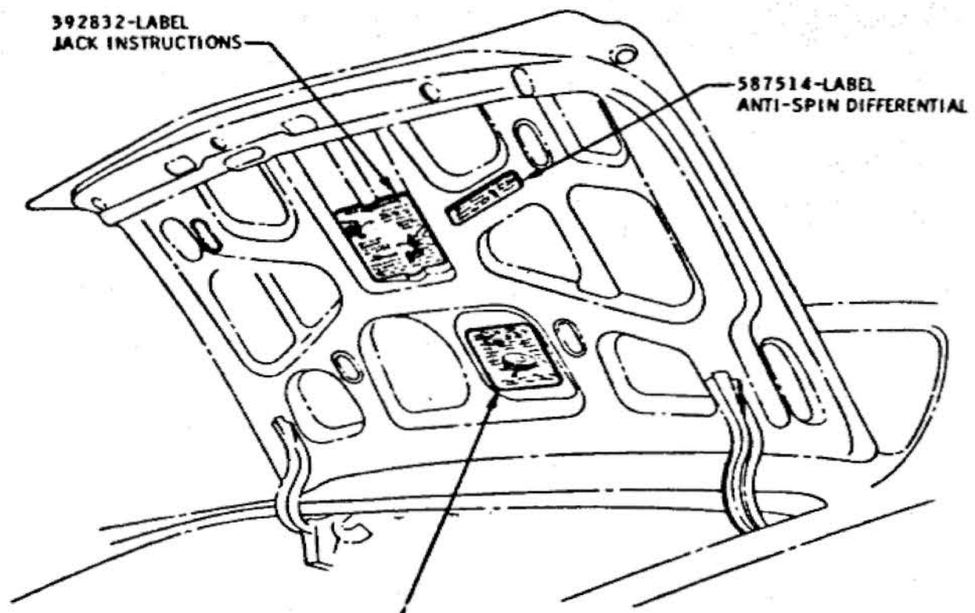

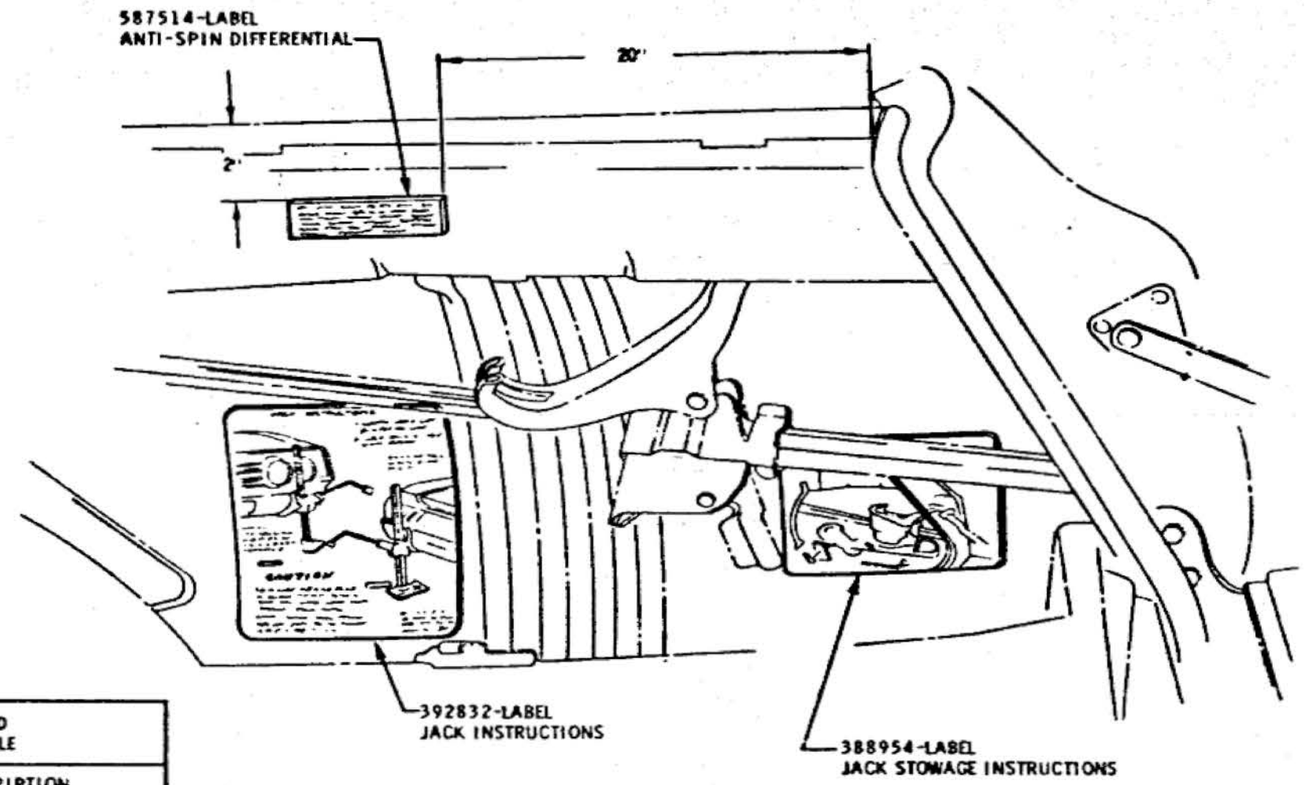

INSTALLATION OF LABELS ON TRUNK LID INNER PANEL

MATERIALS TO BE PLACED IN TRUNK, IF APPLICABLE	
PART NUMBER	DESCRIPTION
587071	ANTENNA MAST
390970	HUB CAPS
389868	WHEEL DISCS
391080 OR 394385	WHEEL DISCS (DELUXE)
391035	WIRE WHEEL COVERS
542926	WHEEL TRIM RINGS
387900 TO 391220	AUXILIARY FLOOR MATS (FRONT)
387914 TO 391225	AUXILIARY FLOOR MATS (REAR)

Ⓒ

Ⓓ

Ⓔ PACKAGE & WRAP PER 391238 PROCESS CHART

INSTALLATION OF LABELS STATION WAGONS

DATE	SYM	REVISION	DR.	CK.	DATE	SYM	REVISION	DR.	CK.	DATE	SYM	REVISION	DR.	CK.
										2-3-66	E	CHART REVISED	JJ	DT
										10-27-65	D	LIC. SUP. REMOVED	RL	DT
										10-8-65	C	CHART REVISED	RL	DT
										7-28-65	B	REDRAWN	RL	RL
										4-28-65	A	WAS 5895M LABEL	CO	DT

INSTALLATION LABELS, TAGS & LOOSE PARTS

DATE APRIL 15 1965
DR. BY G.V. BRACHNIAK
CHECKED F. JANTZ
APPR.
APPR.

FIRST USED 1966
Oldsmobile Service ILLUSTRATION
SERIES A
REF. 10B 10C 10E 10F
PAGE 0-1.25
PART NO. 589998

FOR ENGINEERING U. P. C.
OPTION LIST SEE ADVANCE
ENGINEERING ORDER

NO. 66-522

IBM ACCESSORY CODES

1966
Oldsmobile

Alphabetical Reference

Acc. Letter	Column	Key Punch	Accessory
A01	57	1	Tinted Glass
A02	57	2	Tinted Windshield
A31	66	1	Elec. 4-Window Lifts
A32	66	2	Elec. Ventipanes
A33	68	2	Elec. Tailgate Window
A39	67	2	Deluxe Front and Rear Seat Belts With Retractors
A41	65	1	Elec. 4-Way Seat - Bench
A42	65	2	Elec. 6-Way Seat - Bench
A46	65	8	Elec. 4-Way Seat - Bucket
A51	63	1	Special Order Strato-Bucket Seats
A52	61	4	Bench Seat Option
A53	63	2	Strato-Bench Seat
A65	63	2	Notch Back Bench Seat
A66	68	1	Divided Second Seat
A69	64	1	Strato-Bench Reclining Seat Back
A70	64	2	Strato-Bucket Reclining Seat Back
A74	72	1	Seat Springs, H.D. Front and Rear
A75	72	1	Seat Spring, H.D. Front (SW)
A81	63	4	Strato-Type Head Rest
A82	64	4	Dual Head Rests
A91	44	2	Vacuum Trunk Latch
A93	66	4	Side Door Locks
A98	74	1	Vac. Operated Rear Door Locks
B01	70	1	Police Apprehender (City)
B07	70	2	Police Apprehender (Highway Patrol)
B30	61	1	Wood Carpets
B32	52	1	Aux. Front Floor Mats
B33	52	2	Aux. Rear Floor Mats
B34	72	2	Front Floor Covering, H.D.
B35	72	4	Rear Floor Covering, H.D.
B36	52	4	Luggage Comp. Mat
B39	68	4	Carpeted Load Floor
B50	60	1	Foam Seat Cushion, Front
B52	60	2	Foam Seat Cushion, Rear
B80	59	1	Roof Drip Mouldings
B85	59	2	Exterior Belt Mouldings
B90	58	2	Chrome Door - Window Frames
B93	53	4	Door Edge Guards
C48	51	2	Delete Heater
C50	51	1	Rear Window Defroster
C60	62	1	Air Conditioner
C61	62	2	Comfortron Air Conditioner
D26	69	4	Sun Shade (Vista-Cruiser)
D31	42	2	Tilt-Type Mirror
D33	53	2	Remote Control R.V. Mirror
D55	61	2	Front Comp. Console
F35	54	2	H.D. Frame
G51	54	4	H.D. Springs
G66	55	1	Shock Absorbers (E Only)
G67	55	1	Automatic Level Control (Except E)
G80	54	1	Anti-Spin Differential
G90	56	2	Performance Axle
G91	56	1	Performance Axle
G93	56	3	Performance Axle
G94	56	4	Performance Axle
G95	56	5	Expressway Axle
J50	40	2	Power Brakes
J56	71	2	H.D. Brakes
K19	39	2	Exhaust Control-Forced Air (Calif.)
K20	39	4	Crankcase Ventilation (Calif.)
K30	41	1	Cruise Control

Acc. Letter	Column	Key Punch	Accessory
L65	37	3	Regular Fuel Engine (F8)
L73	37	3	Regular Fuel Engine (F85)
L74	37	2	Cutlass Engine (F85)
L74	37	2	H.C. 4-Bbl. Engine (F8)
L75	37	4	Starfire Engine
L76	37	5	Performance Engine
L77	37	6	Performance Engine
L78	37	9	"4-4-2" Performance Option
M01	55	4	H.D. Clutch
M11	38	1	3-Speed Column Shift
M13	38	6	3-Speed Column for "4-4-2"
M14	38	9	3-Speed Fully Synchronized
M20	38	3	4-Speed Synchronized
M21	38	7	4-Speed Close Ratio Synchronized
M31	38	2	Jetaway (F85 6 Cyl.)
M32	38	5	Jetaway for "4-4-2"
M33	38	2	Jetaway (F85 V8 & J88)
M34	38	8	H.D. Jetaway
M40	38	4	Hydra-Matic
M41	38	8	H.D. Hydra-Matic
N10	39	1	Dual Exhuast System
N30	43	1	Deluxe Steering Wheel
N33	40	4	Tilt Steering Column
N37	40	4	Tilt and Telescope Steering Column
N38	71	1	Manual Steering, H.D.
N40	40	1	Power Steering
N95	50	5	Simulated Wire Wheels
N98	50	4	15" Spider & Trim Ring (E)
P01	50	1	Wheel Discs
P02	50	2	Deluxe Wheel Discs
P05	50	8	14" Super Stock Wheels
P06	50	6	Wheel Trim Rings
P14	49	6	Oversize Whitewall Tires - Radial Ply (E Only)
P19	53	1	Spare Wheel Lock
P26	49	1	14" Whitewall Tires
P27	49	5	15" Whitewall Tires
P28	49	4	15" Blackwall Tires
P29	49	2	14" Oversize Tires
P30	49	3	14" Oversize W/W Tires
Q14	49	7	8.55 x 14 Whitewall Tires - Heavy Service
T15	49	7	7.75 Whitewall Tires - Heavy Service
T17	49	8	8.25 x 14 Whitewall Tires - Heavy Service
T87	48	1	Cornering Lamps
U15	41	2	Safety Sentinel
U16	48	2	Engine Tachometer
U29	45	2	Courtesy Lamps
U35	43	2	Electric Clock
U40	45	4	Parking Brake Lamp
U59	46	4	AM-FM Signal Seeker Radio
U63	46	1	Deluxe Radio
U65	46	2	Super Deluxe Radio
U69	46	3	AM-FM Radio
U71	47	1	Electric Antenna (E)
U75	47	1	Electric Antenna
U80	47	2	Rear Seat Speaker
U84	47	4	Reverb. Rear Speaker
U89	55	2	Trailer Wiring Harness
U90	73	2	Wiring Harness and Reinforcement
U91	73	4	Flasher Wiring Harness
V55	69	1	Luggage Carrier
V56	69	2	Storage Compartment Lock
Y60	44	1	Accessory Package
Y67	60	4	Interior Option
Y68	59	4	Exterior Mouldings
Y75	74	2	Reinforced Wheel and Mt.
Y76	62	4	H.D. Engine Cooling
Y77	53	4	Wheel Cover & Luggage Mat

Rev. 10-4-65

[redacted]

1960
Oldsmobile

For Plant Use

Column	Key Punch	Acc. Letter	Accessory
36	1		Sales Group 1
	2		Sales Group 2
37	2	L74	Cutlass Engine (F85)
	3	L74	H.C. 4-Bbl. Engine (F8)
	3	L86	Regular Fuel Engine (F8)
	3	L73	Regular Fuel Engine (F85)
	4	L79	Starfire Engine (F8)
	5	L76	Performance Engine
	6	L77	Performance Engine
	9	L78	4-4-2" Performance Option
38	1	M11	3-Speed Column Shift
	2	M31	Jetaway (F85 6 Cyl.)
	3	M33	Jetaway (F85 V8 & J85)
	3	M70	4-Speed Synchronized
	4	M40	Hydra-Matic (F8)
	5	M32	Jetaway for "4-4-2"
	6	M13	3-Speed Column for "4-4-2"
	7	M31	4-Speed Close Ratio Synchronized (F85)
	8	M34	H.D. Jetaway
	9	M41	H.D. Hydra-Matic
	0	M14	3-Speed Fully Synchronized
39	1	N10	Dual Exhaust System (F85)
	2	K18	Exhaust Control-Forced Air (Calif.)
	4	K30	Crankcase Ventilation (Calif.)
	3		N10 and K18
	5		N10 and K30
	6		K18 and K30
	7		N10, K18, and K30
40	1	N40	Power Steering
	2	J50	Power Brakes
	4	N33	Tilt Steering Column (F85)
	4	N37	Tilt and Telescope Steering Column
	3		N40 and J50
	5		N40 and N33 or N37
	6		J50 and N33 or N37
	7		N40, J50, and N33 or N37
41	1	K30	Cruise Control
	2	U15	Safety Sentinel (F8)
	3		K30 and U15
42	3	D31	Tilt-Type Mirror
43	1	N30	Deluxe Steering Wheel
	2	U35	Electric Clock
	3		N30 and U35
44	1	Y60	Accessory Package
	2	A81	Vacuum Trunk Latch
	3		Y60 and A81
45	2	U39	Courtesy Lamps
	4	U40	Parking Brake Lamp (F85)
	6		U39 and U40
46	1	U63	Deluxe Radio
	2	U65	Super Deluxe Radio (F8)
	3	U66	AM-FM Radio (F8)
	4	U68	AM-FM Signal Seeker Radio (E Only)
47	1	U71	Electric Antenna (E)
	1	U75	Electric Antenna
	2	U80	Rear Seat Speaker
	4	U84	Reverb. Rear Speaker (F8)
	3		U71 or U75 and U80
	5		U75 and U84
48	1	T87	Cornering Lamps (F8 & E)
	2	U16	Engine Tachometer
49	1	P24	14" Whitewall Tires
	2	P29	14" Oversize Tires
	3	P30	14" Oversize W W Tires
	4	P25	15" Blackwall Tires
	5	P27	15" Whitewall Tires (F85)
	6	P16	Oversize Whitewall Tires - Radial Ply (E Only)
	7	T15	7.75 x 14 Whitewall Tires - Heavy Service (F85 & J85)
	7	Q14	8.00 x 14 Whitewall Tires - Heavy Service (F8)
	8	T17	8.25 x 14 Whitewall Tires - Heavy Service (3400, 3600, 3800, 5600 & 6600)
50	1	P01	Wheel Discs (F85 & J85)
	2	P02	Deluxe Wheel Discs
	4	N06	15" Spider & Trim Ring (E)
	5	N05	Simulated Wire Wheels
	6	P08	Wheel Trim Rings
	8	P06	14" Super Stock Wheels

PLEASE NOTE CHANGES IN COLUMNS 48, 50, 55, 56, 61, 67, 73, 75, AND 79.

Rev. 10-6-65

Column	Key Punch	Acc. Letter	Accessory
51	1	C50	Rear Window Defroster (F8 & E)
	2	C40	Delete Heater
	3		C50 and C40
52	1	B33	Aux. Front Floor Mats
	3	B33	Aux. Rear Floor Mats
	4	B36	Luggage Comp. Mat (3600)
	4	Y77	Wheel Cover & Luggage Mat (F8)
	3		B32 and B33
	5		B32 and B36 or Y77
	6		B33 and B36 or Y77
	7		B32, B33, and B36 or Y77
53	1	P18	Spare Wheel Lock
	2	D32	Remote Control R.V. Mirror
	4	B03	Door Edge Guards
	3		P18 and D32
	5		P18 and B03
	6		D32 and B03
54	1	G80	Anti-Spin Differential
	3	F35	H.D. Frame (F8)
	4	G81	H.D. Springs
	3		G80 and F35
	5		G80 and G81
	6		F35 and G81
	7		G80, F35 and G81
55	1	G68	Shock Absorbers (E Only)
	1	G67	Automatic Level Control (Except E)
	2	U89	Trailer Wiring Harness
	4	M01	H.D. Clutch (F85)
	3		G67 and U89
	5		G67 and M01
	6		U89 and M01
	7		G67, U89, and M01
56	1	G91	Performance Axle
	2	G90	Performance Axle
	3	G93	Performance Axle
	4	G94	Performance Axle (F85)
	5	G95	Expressway Axle
57	1	A01	Tinted Glass
	2	A02	Tinted Windshield
58	2	B90	Chrome Door - Window Frames
59	1	B80	Roof Drip Mldgs.
	3	B85	Exterior Belt Mldg.
	4	Y68	Exterior Mouldings (F85)
	3		B80 and B85
	5		B80 and Y68
	6		B85 and Y68
	7		B80, B85, and Y68
60	1	B50	Foam Seat Cushion, Front
	2	B52	Foam Seat Cushion, Rear
	4	Y67	Interior Option
	3		B50 and B52
	5		B50 and Y67 (F85 Only)
	6		B52 and Y67
	7		B50, B52, and Y67 (F85 Only)
61	1	B30	Wool Carpets
	2	D55	Front Comp. Console (F85)
	4	A32	Bench Seat Option (3807)
62	1	C60	Air Conditioner
	2	C61	Comfortron Air Conditioner
	4	Y76	H.D. Engine Cooling
63	1	A81	Special Order Strato-Bucket Seats (9487, 9687)
	2	A83	Strato-Bench Seat (9487)
	3	A68	Notch Back Bench Seat (3817, 3867)
	4	A81	Strato-Type Head Rest
	5		A81 and A81
	6		A83 and A81
64	1	A60	Strato-Bench Reclining Seat Back
	2	A70	Strato-Bucket Reclining Seat Back
	4	A82	Dual Head Rests
65	1	A61	Elec. 4-Way Seat - Bench
	2	A62	Elec. 6-Way Seat - Bench
	3	A66	Elec. 4-Way Seat - Bucket

Column	Key Punch	Acc. Letter	Accessory
66	1	A31	Elec. 4-Window Lifts
	2	A32	Elec. Ventipanes (F8)
	4	A83	Side Door Locks (F8 & E)
	3		A31 and A32
	5		A31 and A83
	6		A32 and A83
	7		A31, A32, and A83
67	2	A30	Deluxe Front and Rear Seat Belts with Retractors
	4	A40	Delete Standard Front and Rear Seat Belts (All Export)
	6	A63	Delete Standard Rear Seat Belts (Export - "C")
	8	A40	Deluxe Front Seat Belts -
		A63	Delete Rear Seat Belts (Export - "A" and "B")
68	1	A06	Divided Second Seat
	2	A33	Elec. Tailgate Window
	4	B30	Carpeted Load Floor
	3		A06 and A33
	5		A06 and B30
	6		A33 and B30
	7		A06, A33, and B30
69	1	V55	Luggage Carrier
	2	V56	Storage Compartment Lock
	4	D36	Sun Shade (Vista-Cruiser)
	3		V55 and V56
	5		V55 and D36
	6		V56 and D36
	7		V55, V56, and D36
70	1	B01	Police Apprehender (City)
	2	B07	Police Apprehender (Highway Patrol)
71	1	N38	Manual Steering, H.D.
	2	J66	H.D. Brakes
	3		N38 and J66
72	1	A74	Seat Springs, H.D. Front and Rear
	1	A75	Seat Spring, H.D. Front (SW)
	2	B34	Front Floor Covering, H.D.
	4	B35	Rear Floor Covering, H.D.
	3		A74 or A75 and B34
	5		A74 or A75 and B35
	6		B34 and B35
	7		A74 or A75, B34, and B35
73	2	U90	Wiring Harness and and Reinforcement
	4	U91	Flasher Wiring Harness
74	1	A90	Vac. Operated Rear Door Locks (F8 Sedan Only)
	2	Y75	Reinforced Wheel and Mk. (F8)
	3		A90 and Y75
75	1	Y64	Factory Retail Service
	3	Y63	Special Paint - Charge
	4	Y63	Special Paint - No Charge
	5	Y66	Dealer Retail Service
	12		Expedite
	3		Y64 and Y62
	5		Y64 and Y63
76	A		G.M. Employee or Allied Division
	D		Dealer Demo
	F		Fleet Order
	S		Sold Order
	T		Terminated Dealer
	X		Export
77	1	Y61	Export Preparation
78	1	T74	R.H. Headlamps
	2	V60	Tire Pump
	3		T74 and V60
79	3	P19	Firestone 500 - Standard Whitewall
	4	P15	Firestone 500 - Oversize Whitewall
	5	N87	Special Goodyear Whitewalls
	6	N88	Special Goodyear Blackwalls
	7	T23	8.00 x 14 Blackwall Tires - Heavy-Service (9000 Only)
	8	T23	8.00 x 14 Whitewall Tires - Heavy-Service (9000 Only)
80	1	U18	Kilo Speedometer
	2	L90	Low Compression Engine
	4	F74	Export Springs
	3		U18 and L90
	5		U18 and F74
	6		L90 and F74
	7		U18, L90 and F74

LANSING PRODUCTION ONLY

0-1.28

OLDSMOBILE PRODUCT INFORMATION MANUAL

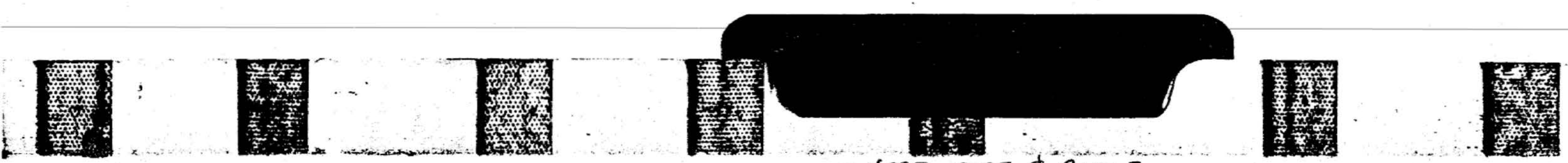

1 - HOSE, PIPE & CABLE ROUTINGS

GROUP 1 - HOSE, PIPE, AND CABLE ROUTING

HEATER CONTROL CABLE & WATER HOSE DIAGRAM----------1-9.2
V8 A/C VACUUM HOSE & CONTROL CABLE DIAGRAM----------1-9.3
L6 A/C VACUUM HOSE & CONTROL CABLE DIAGRAM----------1-9.4
CHART-VACUUM TRUNK RELEASE HOSE DIAGRAM---------- 1-9.5
393531-CHART HEATER HOSE----------1-9.6
V8 CHART-CRUISE CONTROL VACUUM HOSE DIAGRAM----------1-9.7
L6 CHART-CRUISE CONTROL VACUUM HOSE DIAGRAM----------1-9.8
SPEEDOMETER (EXC. 35K30)---------- 1-10.1
SPEEDOMETER (35M13, 35M14, 35M20 & 35M21)----------1-10.2
VACUUM TRUNK LID RELEASE (INSIDE OF CAR)---------- 1-10.3
V8 VACUUM TRUNK LID RELEASE (ENGINE COMP.)---------- 1-10.4
L6 VACUUM TRUNK LID RELEASE (ENGINE COMP.)---------- 1-10.4A
V8 A/C VACUUM HOSE & WIRING (ENGINE COMP.)----------1-10.5
CONSOLE VACUUM GAGE HOSE (ENGINE COMP.)----------1-10.6
WIPER & WASHER HOSE---------- 1-10.7
1-10.8
STANDARD HEATER CONTROL CABLES----------1-10.9

V8 HEATER WATER HOSES---------- 1-10.10
35L69 HEATER WATER AND VACUUM HOSES----------1-10.11
L6 THROTTLE CONTROL CABLE---------- 1-10.12
A/C END OUTLET HOSES----------1-10.13
A/C CONTROL CABLES & VACUUM HOSES (INSIDE OF CAR)----------1-10.14
V8 A/C HEATER & VACUUM HOSES---------- 1-10.15
A/C MUFFLER & HOSES (ENGINE COMP.)---------- 1-10.16
A/C MUFFLER & HOSES (ENGINE COMP.)---------- 1-10.17
L6 STANDARD HEATER WATER HOSES----------1-10.18
AUTOMATIC SUPERLIFT COMPRESSOR ASSY---------- 1-10.19
AUTOMATIC SUPERLIFT SHOCK ABSORBERS---------- 1-10.20
AUTOMATIC SUPERLIFT SHOCK ABSORBERS---------- 1-10.21
AUTOMATIC SUPERLIFT SHOCK ABSORBERS---------- 1-10.22
AUTOMATIC SUPERLIFT SHOCK (EXT. WAGON ONLY)---------- 1-10.23
AUTOMATIC SUPERLIFT SHOCK ABSORBERS----------1-10.24
L6 CRUISE CONTROL CABLE & VACUUM HOSE----------1-10.25
V8 CRUISE CONTROL CABLE---------- 1-10.26
V8 CRUISE CONTROL VACUUM HOSE---------- 1-10.27

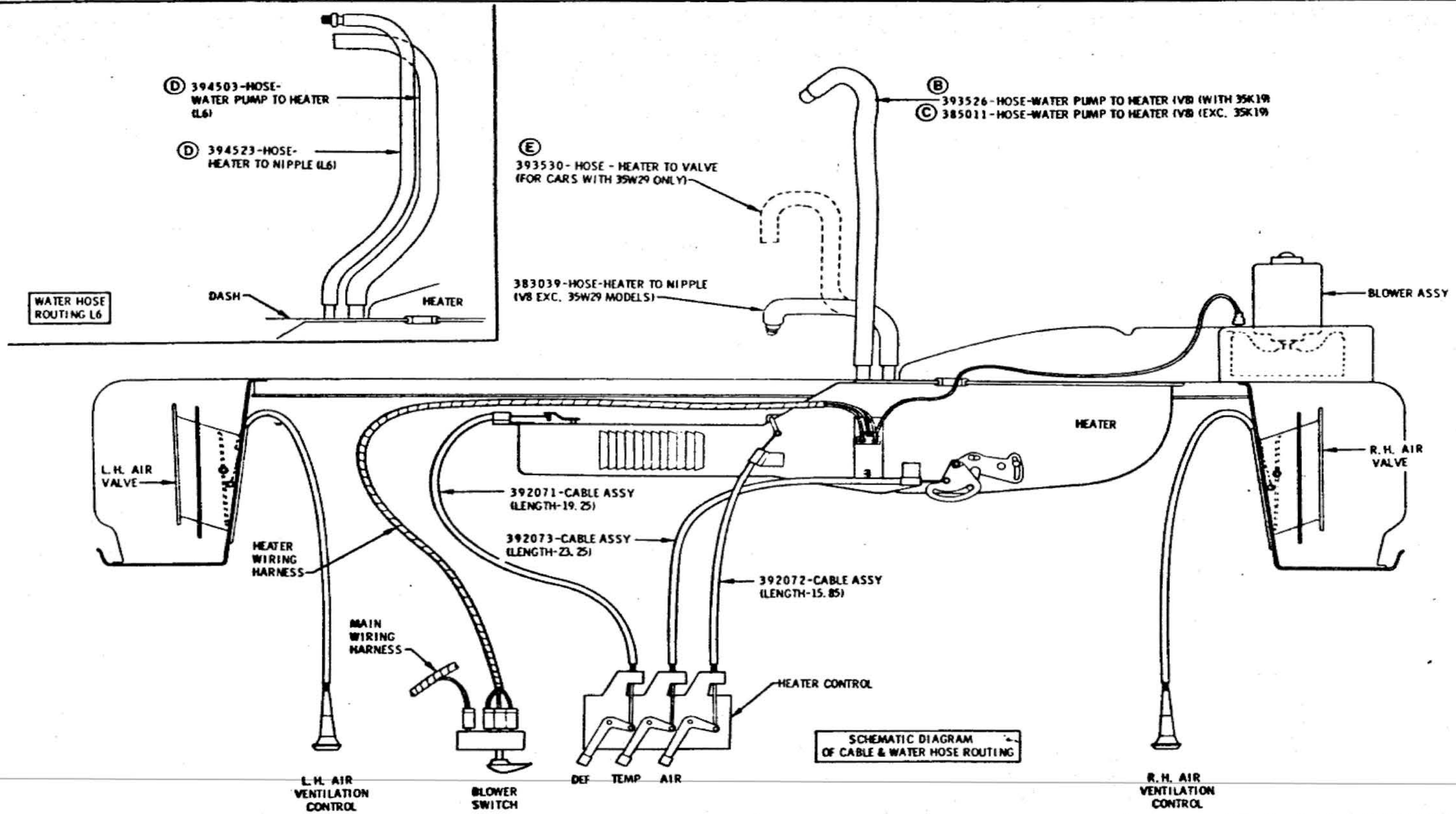

HEATER CONTROL CABLES & WATER HOSE DIAGRAM

DATE	SYM	REVISION	DR.	CK.	DATE	SYM	REVISION	DR.	CK.	DATE	SYM	REVISION	DR.	CK.
										1-8-66	E	WAS 389432 HOSE		DT
										10-4-65	D	PART NO'S REVISED		DT
										8-18-65	C	PART NO. ADDED		VP
										7-19-65	B	WAS 383040 HOSE	JJ	VP
										5-8-65	A	WAS PAGE 1-10.8		FJ

INSTALLATION: HOSE, PIPE AND CABLE ROUTING

DATE MAR. 24, 1965
DR. BY TITUS
CHECKED H. VAN PELT
APPR. W. Jackson

FIRST USED 1966
SERIES A
REF. HPC
PAGE 1-9.2
PART NO. 589998

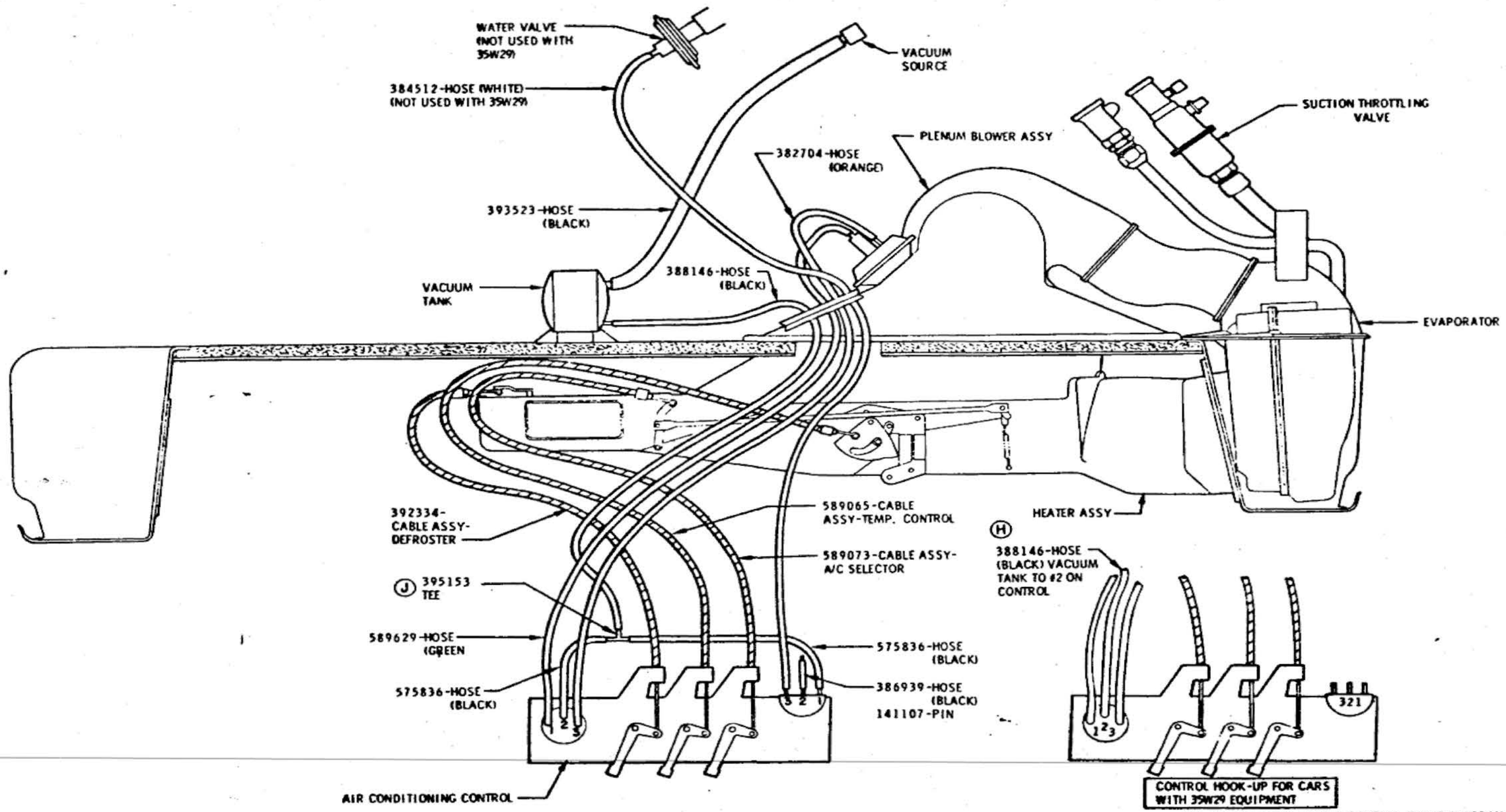

V8-A/C VACUUM HOSE & CONTROL CABLE DIAGRAM

DATE	SYM	REVISION	DR.	CK.	DATE	SYM	REVISION	DR.	CK.	DATE	SYM	REVISION	DR.	CK.
										8-11-65	E	WAS 383410 HOSE	CG	VP
					12-5-66	J	WAS 370267-TEE	F.d	DT	8-4-65	D	REDRAWN & REVISED	F.d	VP
					11-9-65	H	WAS 386339-HOSE	Cg	DT	7-9-65	Cg	NOTES REVISED	RI	MB
					10-7-65	G	ISSUED IN COLOR	GK	DT	7-9-65	B	DIAGRAM REVISED	RI	MB
					9-20-65	F	HOSE DIMS REMOVED	GK	DT	5-25-65	A	WAS PAGE F-10.11	JG	F.d

INSTALLATION **HOSE, PIPE AND CABLE ROUTING**

DATE APRIL 4, 1965
DR. BY TITUS
CHECKED H. VAN PELT
APPR. R. E. Malcolm

FIRST USED 1966
SERIES A
Oldsmobile Service ILLUSTRATION
REF. 35CGO
PAGE 1-9.3
PART NO. 589998

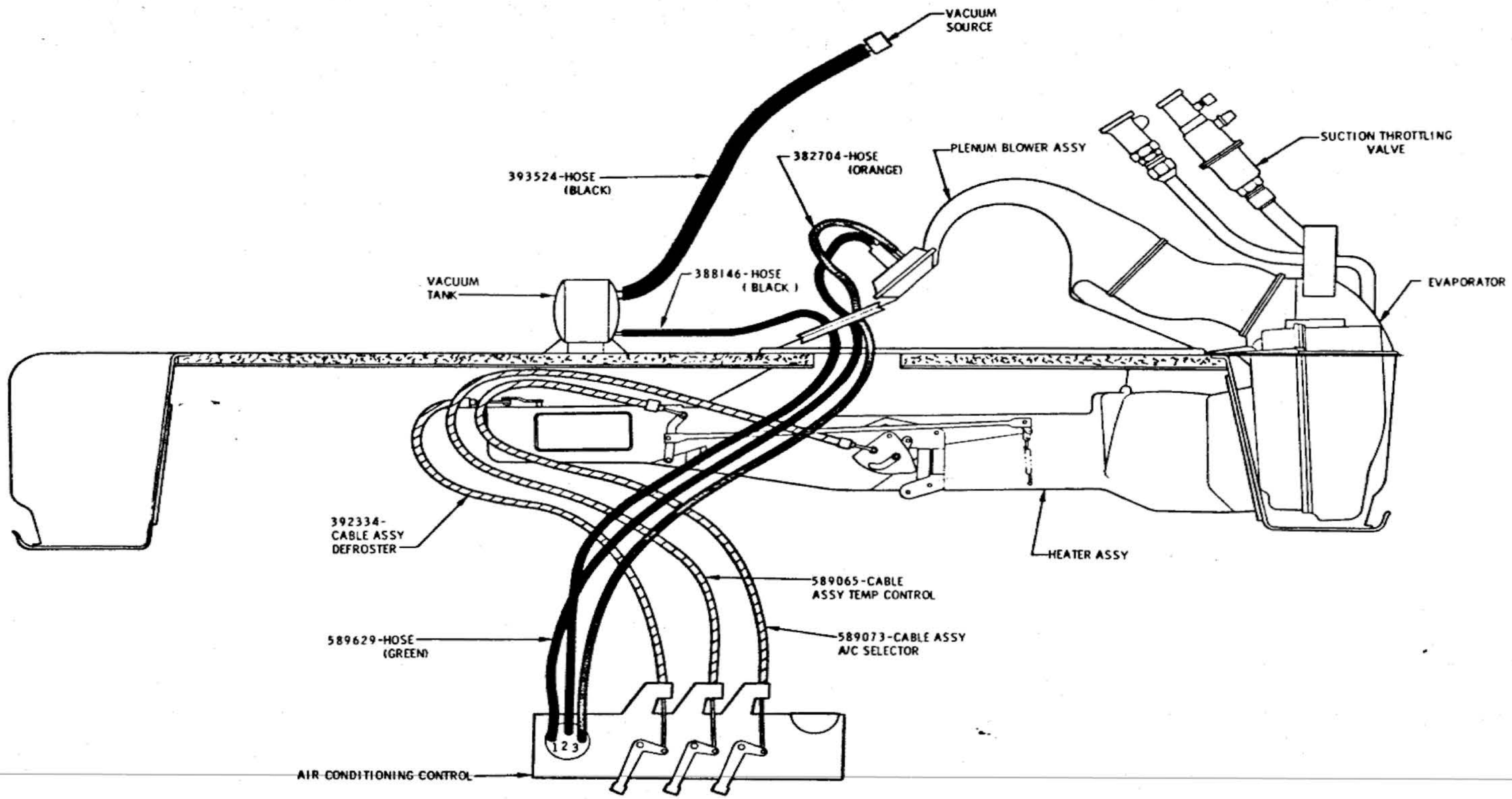

L6-A/C VACUUM HOSE & CONTROL CABLE DIAGRAM

DATE	SYM	REVISION	DR.	CK.	DATE	SYM	REVISION	DR.	CK.	DATE	SYM	REVISION	DR.	CK.
										10-7-65	E	ISSUED IN COLOR	GR	DT
										9-20-65	D	HOSE DIM'S. REMOVED	GR	DT
										8-11-65	C	WAS 392486 HOSE	GR	VP
										8-4-65	B	REDRAWN & REVISED	[illegible]	VP
										5-28-65	A	WAS PAGE 1-10.12	RG	FJ

INSTALLATION — HOSE, PIPE AND CABLE ROUTING

DATE APRIL 4, 1965
DR. BY TITUS
CHECKED H. VAN PELT
APPR. K. E. [illegible]
APPR.

FIRST USED 1966 — Oldsmobile Service ILLUSTRATION

SERIES A — REF. —

PAGE 1-9.4

PART NO. 589998

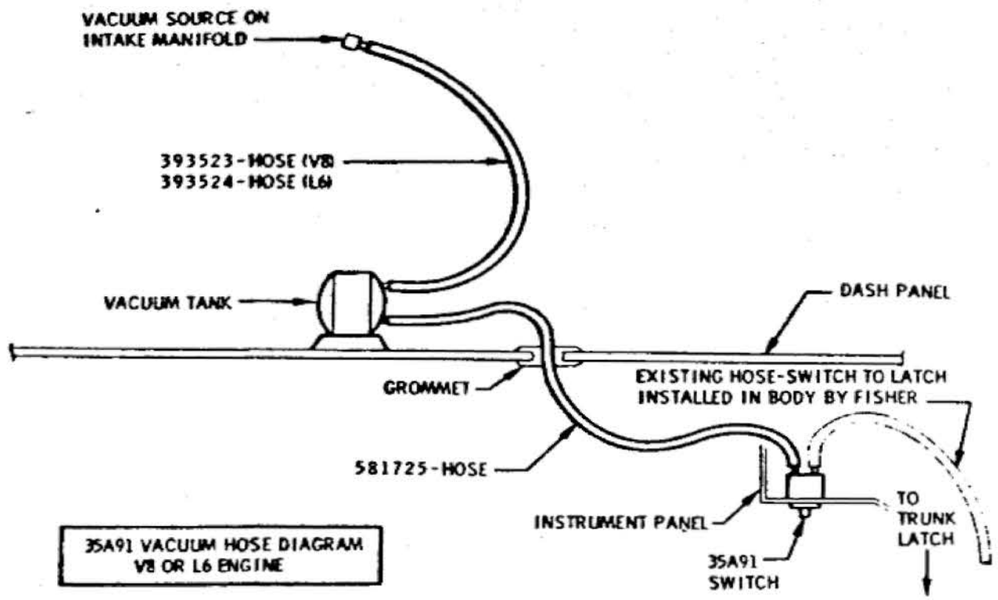

35A91 VACUUM HOSE DIAGRAM
V8 OR L6 ENGINE

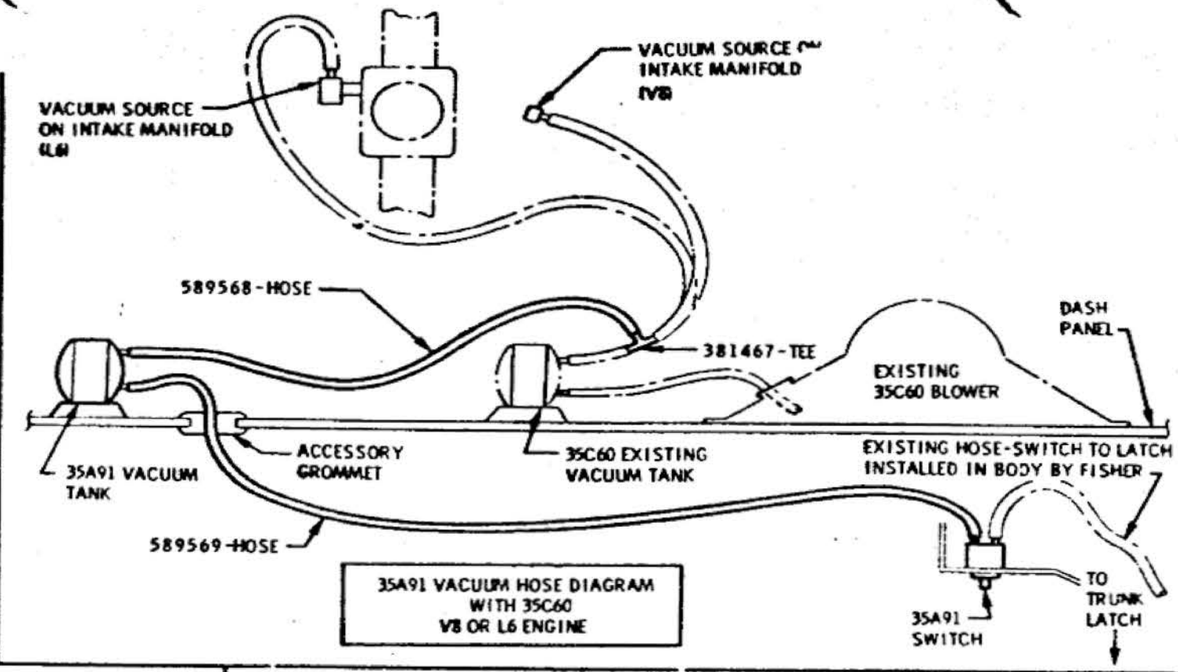

35A91 VACUUM HOSE DIAGRAM
WITH 35C60
V8 OR L6 ENGINE

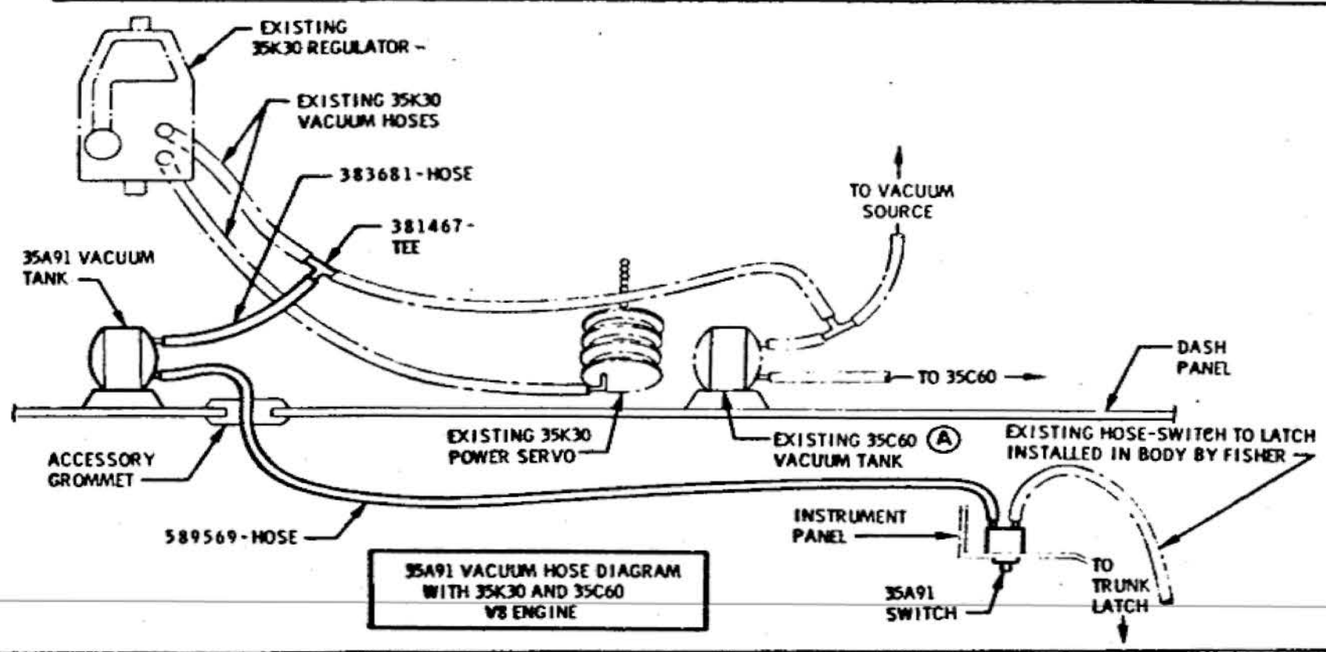

35A91 VACUUM HOSE DIAGRAM
WITH 35K30 AND 35C60
V8 ENGINE

REFERENCES:

0-1.13	HOLE DRILLING (V8)
0-1.13A	HOLE DRILLING
1-4.3	TANK INSTALLATION
1-10.3	HOSE ROUTING (INSIDE CAR)
1-10.4	HOSE ROUTING (ENGINE COMP'T-V8)
1-10.4A	HOSE ROUTING (ENGINE COMP'T-L6)
1-6.13	SWITCH INSTALLATION
6-2.15	VACUUM SOURCE FITTING (V8)
6-2.16	VACUUM SOURCE FITTING (L6)

VACUUM TRUNK RELEASE (35A91) HOSE DIAGRAM

DATE	SYM	REVISION	DR.	CK.	DATE	SYM	REVISION	DR.	CK.	DATE	SYM	REVISION	DR.	CK.
										10-28-65	A	WAS 35K30 TANK		DT

CHART HOSE, PIPE AND CABLE ROUTING

DATE OCTOBER 1, 1966
DR. BY C.V. BEACHNAU
CHECKED Tous
APPR. Fred Jantz
APPR.

FIRST USED 1966
Oldsmobile Service ILLUSTRATION
SERIES A
REF.
PAGE 1-9.5
PART NO. 589998

PART NUMBER	CODE
383039	WA
387559	WB
387678	WC
387679	WD
389935	WE
389937	WF
389945	WG
391374	WH
391376	WI
391377	WJ
391378	WK
392731	WL
392732	WM
393162	WN
393530	WO
393526	WP
Ⓐ 385011	WR
Ⓐ 387558	WS
Ⓑ 394503	WT
Ⓑ 394523	WU
Ⓒ 395255	WV

SEE DETAIL DRAWING FOR LOCATION OF CODE LETTERS

DATE	SYM	REVISION	DR.	CK.	DATE	SYM	REVISION	DR.	CK.	DATE	SYM	REVISION	DR.	CK.
										4-29-65	C	PART NO. ADDED	JJ	JP
										8-29-65	B2	PART NO.'S ADDED	JJ	JP
										7-19-65	A2	PART NO.'S ADDED	JJ	JP

CHART HEATER HOSE

DATE MAY 21, 1965
DR. BY JIM GRAY
CHECKED John Pirrone
APPR.
APPR.

FIRST USED 1966
SERIES A-B-C-E
REF.
ILLUSTRATION
PAGE 1-9.6
PART NO. 393531

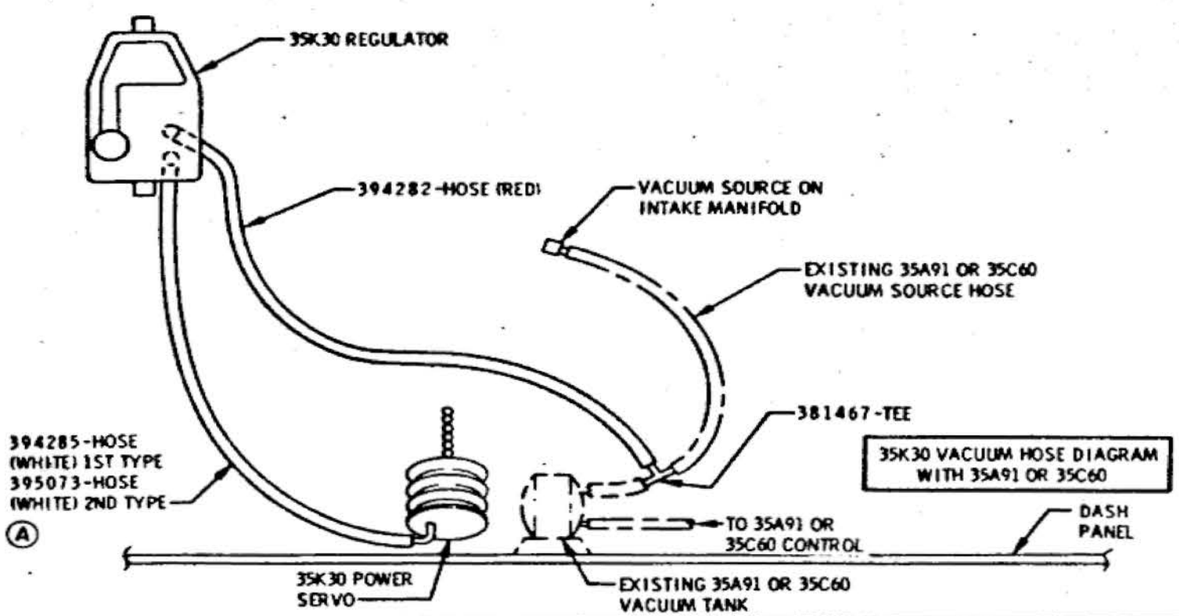

35K30 VACUUM HOSE DIAGRAM WITH 35A91 OR 35C60

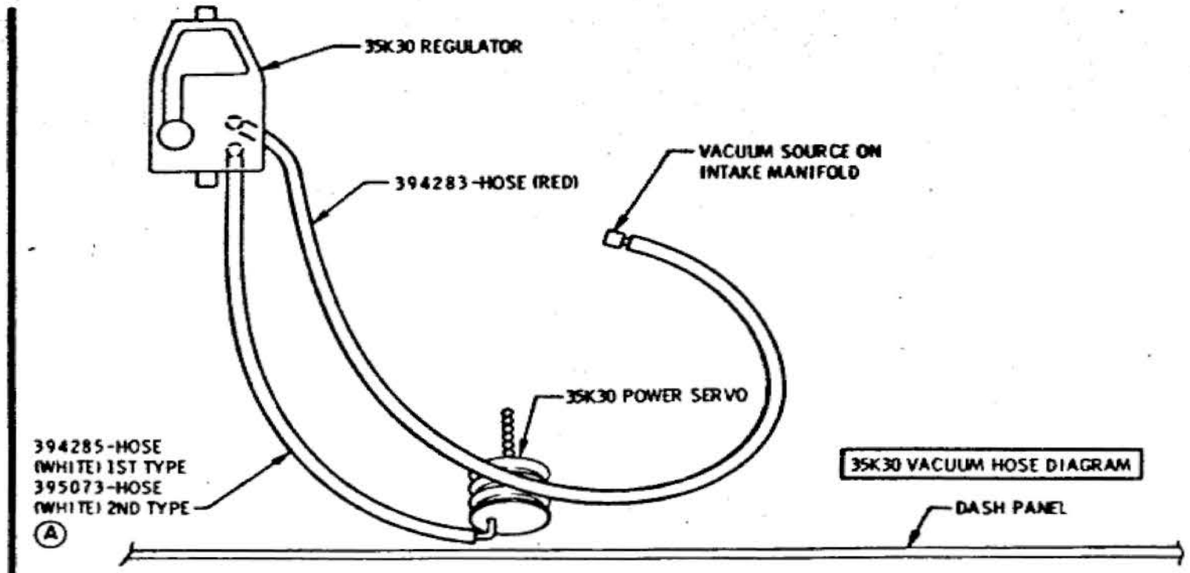

35K30 VACUUM HOSE DIAGRAM

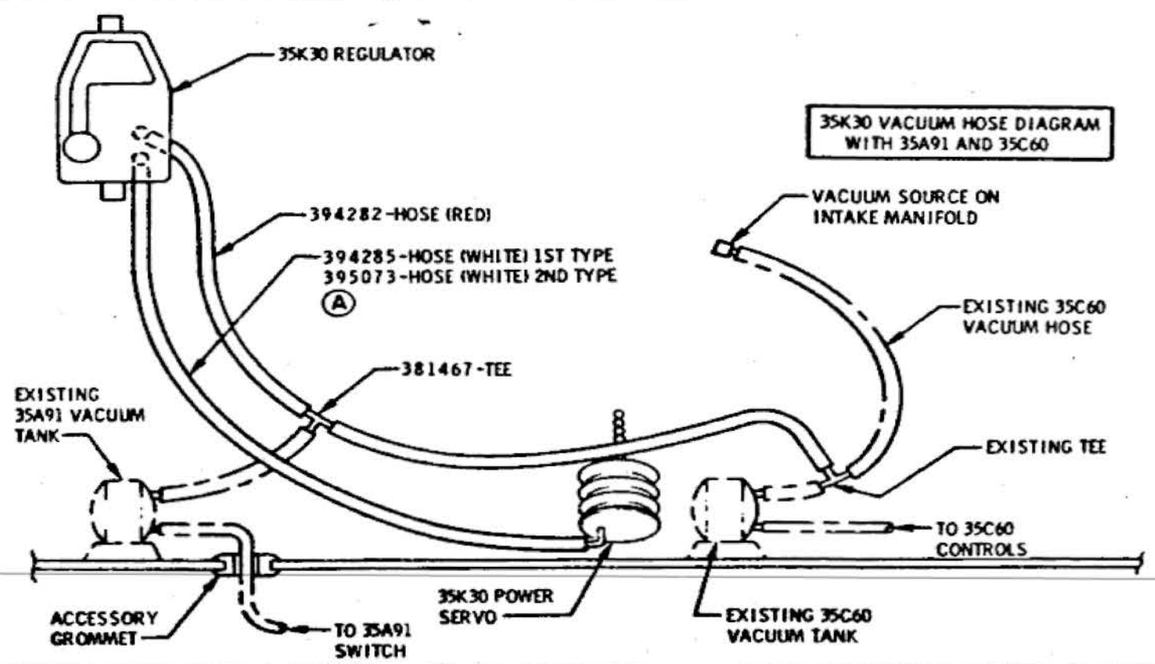

35K30 VACUUM HOSE DIAGRAM WITH 35A91 AND 35C60

REFERENCES:

0-1.13A	HOLE DRILLING
1-4.9	POWER SERVO
1-10.27	HOSE ROUTING (ENGINE COMP'T)
6-2.15	VACUUM SOURCE FITTING
11-2.21	REGULATOR

CRUISE CONTROL (35K30) VACUUM HOSE DIAGRAMS
V8 ENGINE

DATE	SYM	REVISION	DR.	CK.	DATE	SYM	REVISION	DR.	CK.	DATE	SYM	REVISION	DR.	CK.
										1-10-65	A3	SECOND TYPE ADDED		DT

CHART HOSE, PIPE AND CABLE ROUTING

DATE SEPTEMBER 30, 1965
DR. BY CURT MAY
CHECKED Tipps
APPR. Fred Gantz
APPR.

FIRST USED 1966
Oldsmobile Service ILLUSTRATION
SERIES A
REF.
PAGE 1-9.7
PART NO. 589998

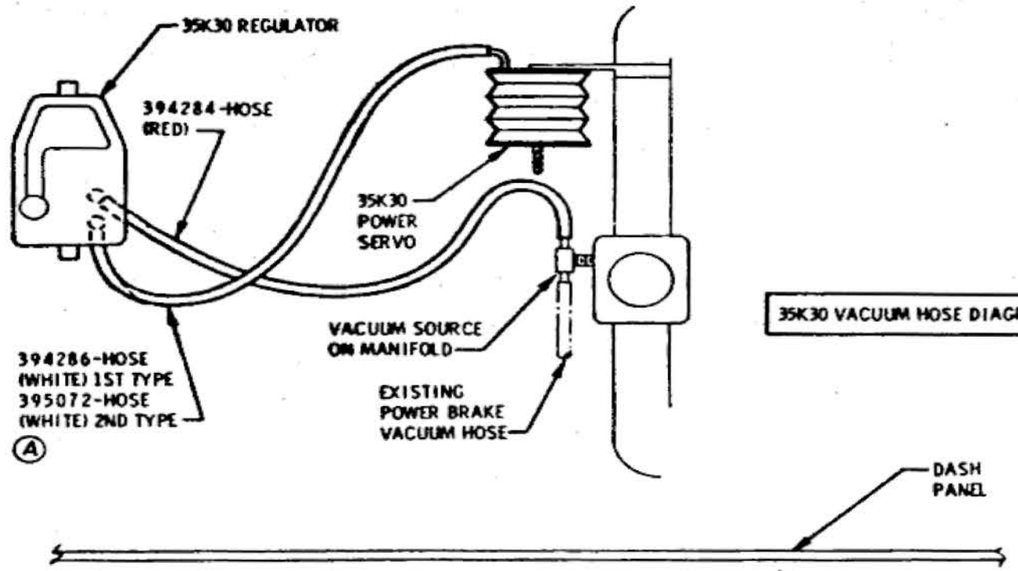

35K30 VACUUM HOSE DIAGRAM

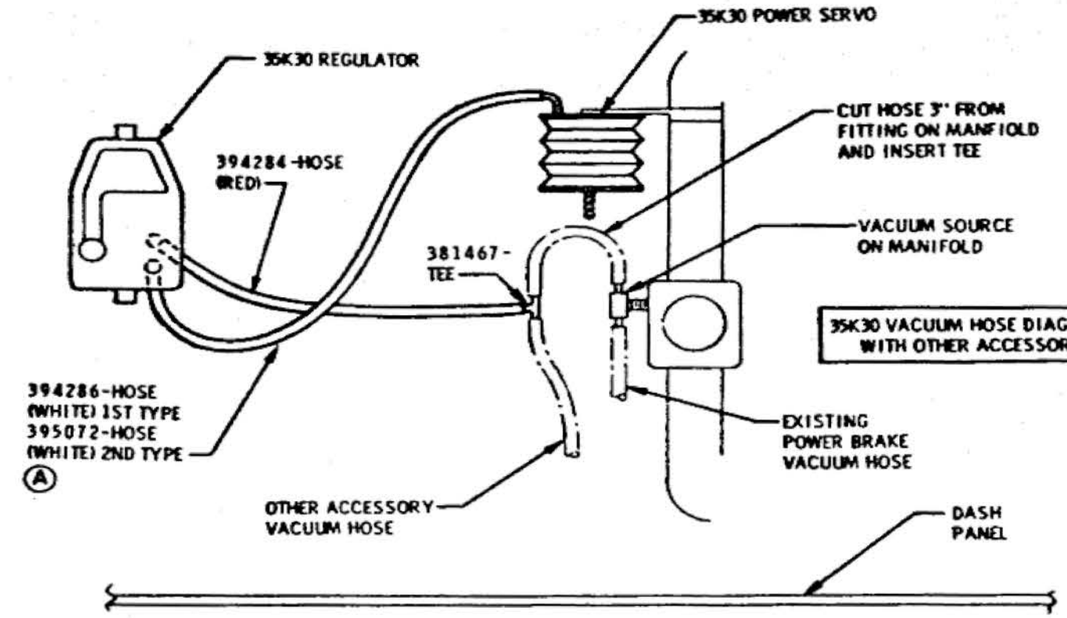

35K30 VACUUM HOSE DIAGRAM WITH OTHER ACCESSORIES

REFERENCES:

1-10.25 HOSE ROUTING (ENGINE COMP'T)
6-2.16 VACUUM SOURCE FITTING
6-2.18 POWER SERVO
11-2.21 REGULATOR

CRUISE CONTROL (35K30) VACUUM HOSE DIAGRAMS
L6 ENGINE

DATE	SYM	REVISION	DR.	CK.	DATE	SYM	REVISION	DR.	CK.	DATE	SYM	REVISION	DR.	CK.
										11-17-65	A	SECOND TYPE ADDED		DT

CHART HOSE, PIPE AND CABLE ROUTING

DATE OCTOBER 1, 1965
DR. BY D. C. KIMBERLIN
CHECKED Tiny
APPR. Fred Jantz
APPR.

FIRST USED 1966
Oldsmobile Service ILLUSTRATION
SERIES A
REF.
PAGE 1-9.8
PART NO. 589998

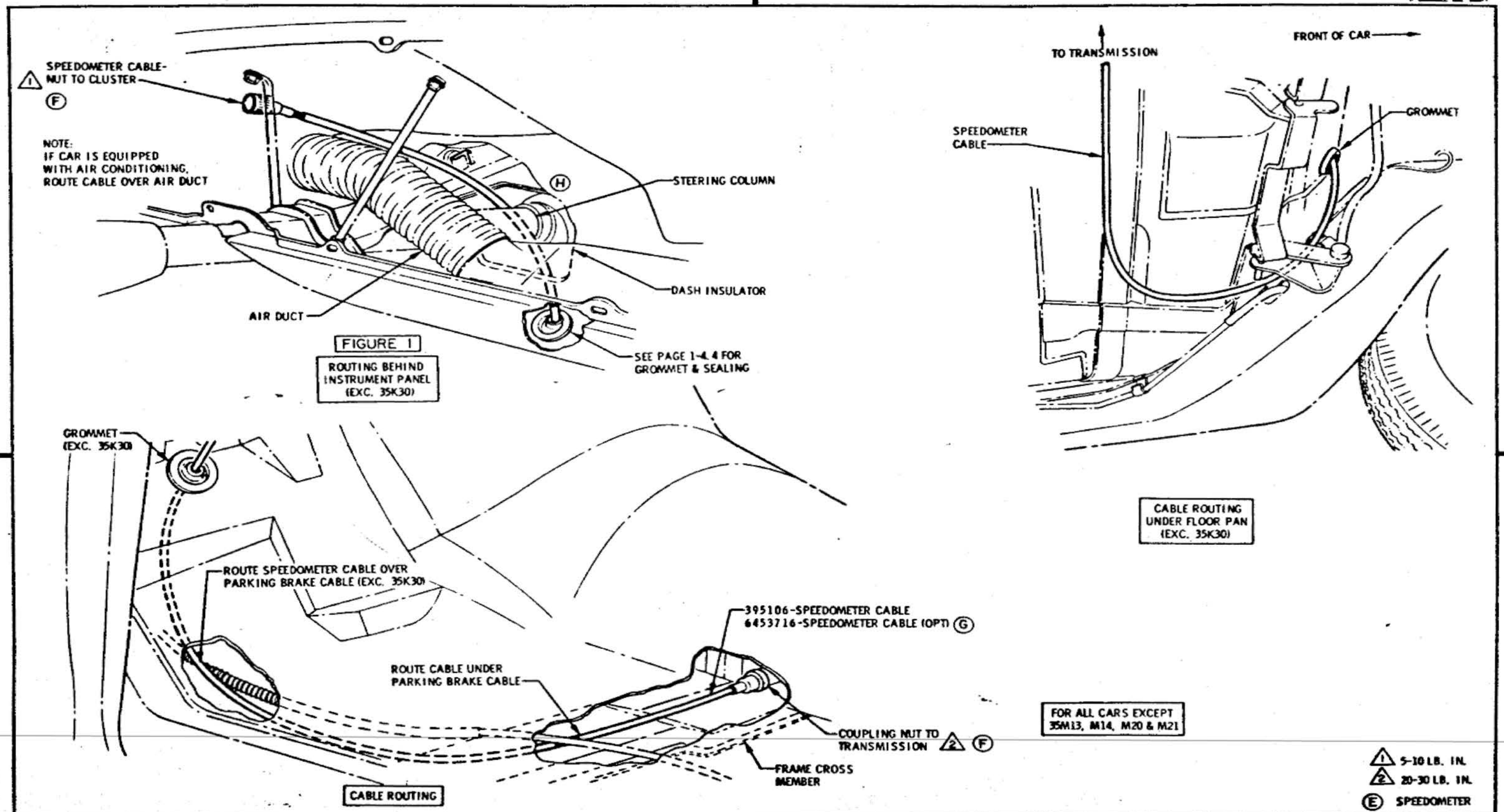

FIGURE 1
ROUTING BEHIND INSTRUMENT PANEL (EXC. 35K30)

CABLE ROUTING

CABLE ROUTING UNDER FLOOR PAN (EXC. 35K30)

FOR ALL CARS EXCEPT 35M13, M14, M20 & M21

DATE	SYM	REVISION	DR.	CK.	DATE	SYM	REVISION	DR.	CK.	DATE	SYM	REVISION	DR.	CK.
										1-12-66	E	TITLES REVISED		DT
										11-29-65	D	WIRES GASKETED & CABLE		DT
					4-20-66	N	SPEEDO CABLE REROUTED		DT	11-1-65	C	NOTE REVISED		DT
					1-25-66	G	6453716 OPT. CABLE ADD.		DT	8-5-65	B	NOTE REVISED		VP
					1-13-66	F	TORQUES ADDED		DT	6-16-65	A	6409634 CABLE ADDED		VP

INSTALLATION **HOSE, PIPE AND CABLE ROUTING**

DATE MAR. 8, 1965
DR. BY JOE K GALL
CHECKED H. VAN PELT
APPR.
APPR.

FIRST USED 1966
Oldsmobile Service ILLUSTRATION
SERIES A
REV. 12 J
PAGE 1-10.1
PART NO. 589998

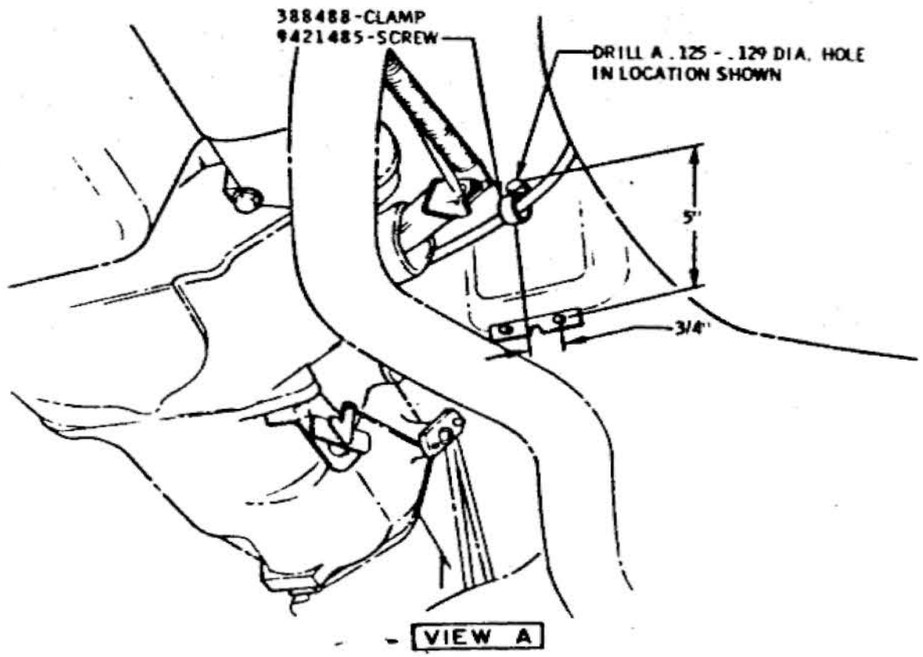

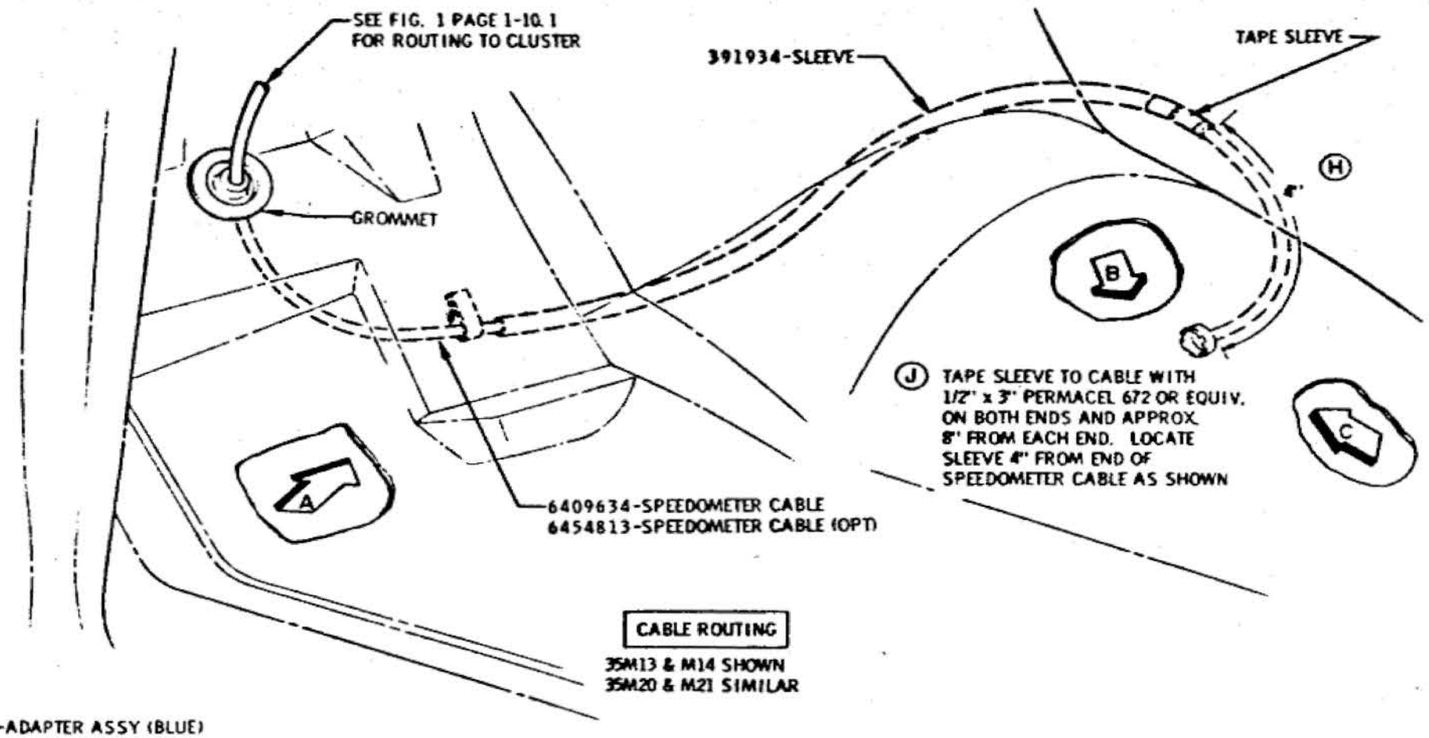

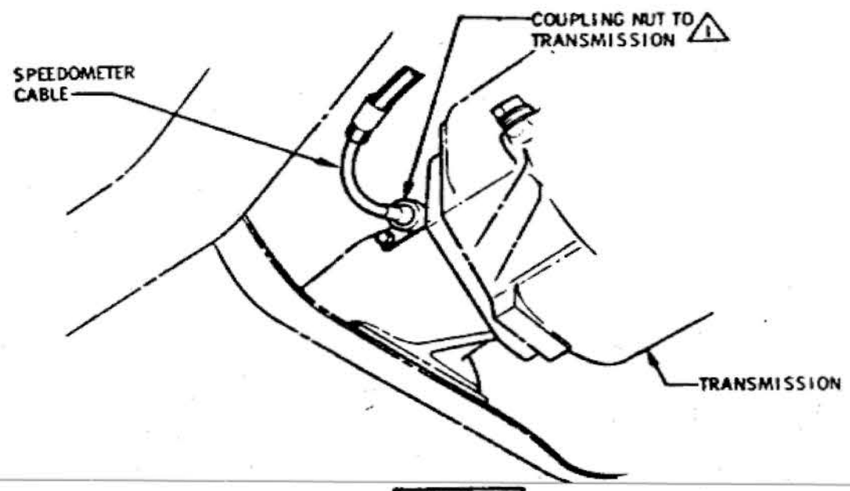

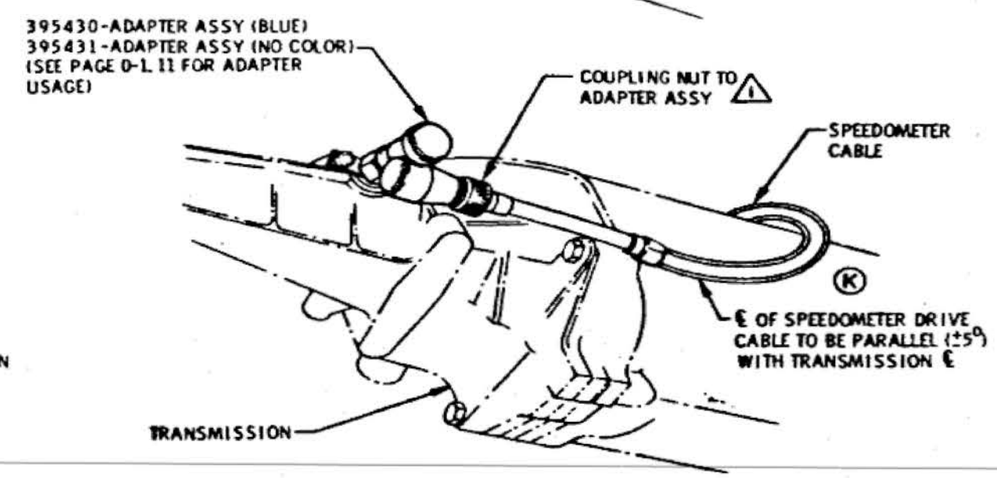

1 20-30 LB. IN.

SPEEDOMETER CABLE ROUTING FOR CARS WITH 35M13, M14, M20 AND M21

DATE	SYM	REVISION	DR.	CK.	DATE	SYM	REVISION	DR.	CK.	DATE	SYM	REVISION	DR.	CK.
					1-13-66	K	CABLE ROUTING REVISED	18	DT	1-13-66	E	TORQUES ADDED	8/4	DT
					12-27-65	J	NOTE REVISED	BS	DT	12-27-65	D	VIEW ADDED	7/16	DT
					8-5-65	H	DIMENSION ADDED	8/8	DT	8-5-65	C	NOTE ADDED	8/8	VP
					7-26-65	G	TORQUE REMOVED	7/8	DT	7-26-65	B	VIEW REMOVED	7/8	VP
					6-25-65	F	6454813 OPT. CABLE ADD	6/8	DT	6-17-65	A	WAS 6409968 CABLE ASSY	CG	VP

INSTALLATION **HOSE, PIPE AND CABLE ROUTING**

DATE MAR. 8, 1965
DR. BY JOE V. GALL
CHECKED H. VAN PELT
APPR.
APPR.

FIRST USED 1966 — Oldsmobile Service ILLUSTRATION

SERIES A — REF. M13 M14

PAGE 1-10.2

PART NO. 589998

NOTE:
SEE PAGE 1-10.4 FOR HOSE ROUTING IN ENGINE COMPARTMENT

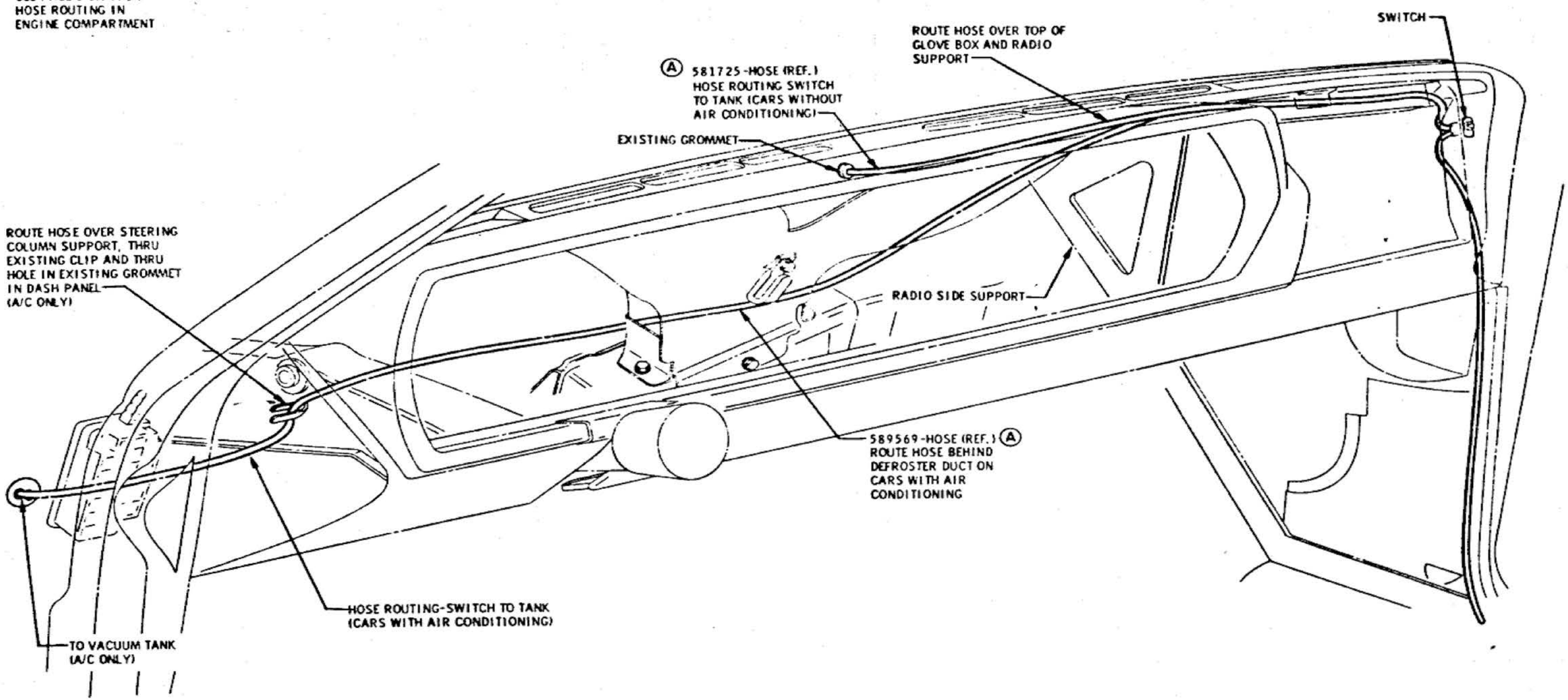

VACUUM TRUNK LID RELEASE (INSIDE OF CAR)

DATE	SYM	REVISION	DR	CK	DATE	SYM	REVISION	DR	CK	DATE	SYM	REVISION	DR	CK
										7-27-65	A	PART NO'S ADDED	JWP	

INSTALLATION **HOSE, PIPE AND CABLE ROUTING**

DATE MAR. 23, 1965
DR. BY TITUS
CHECKED H. VAN PELT
APPR.
APPR.

FIRST USED 1966 — Oldsmobile Graphic Illustration

SERIES A — REF. 35A91 — PAGE 1-10.3 — PART NO. 589998

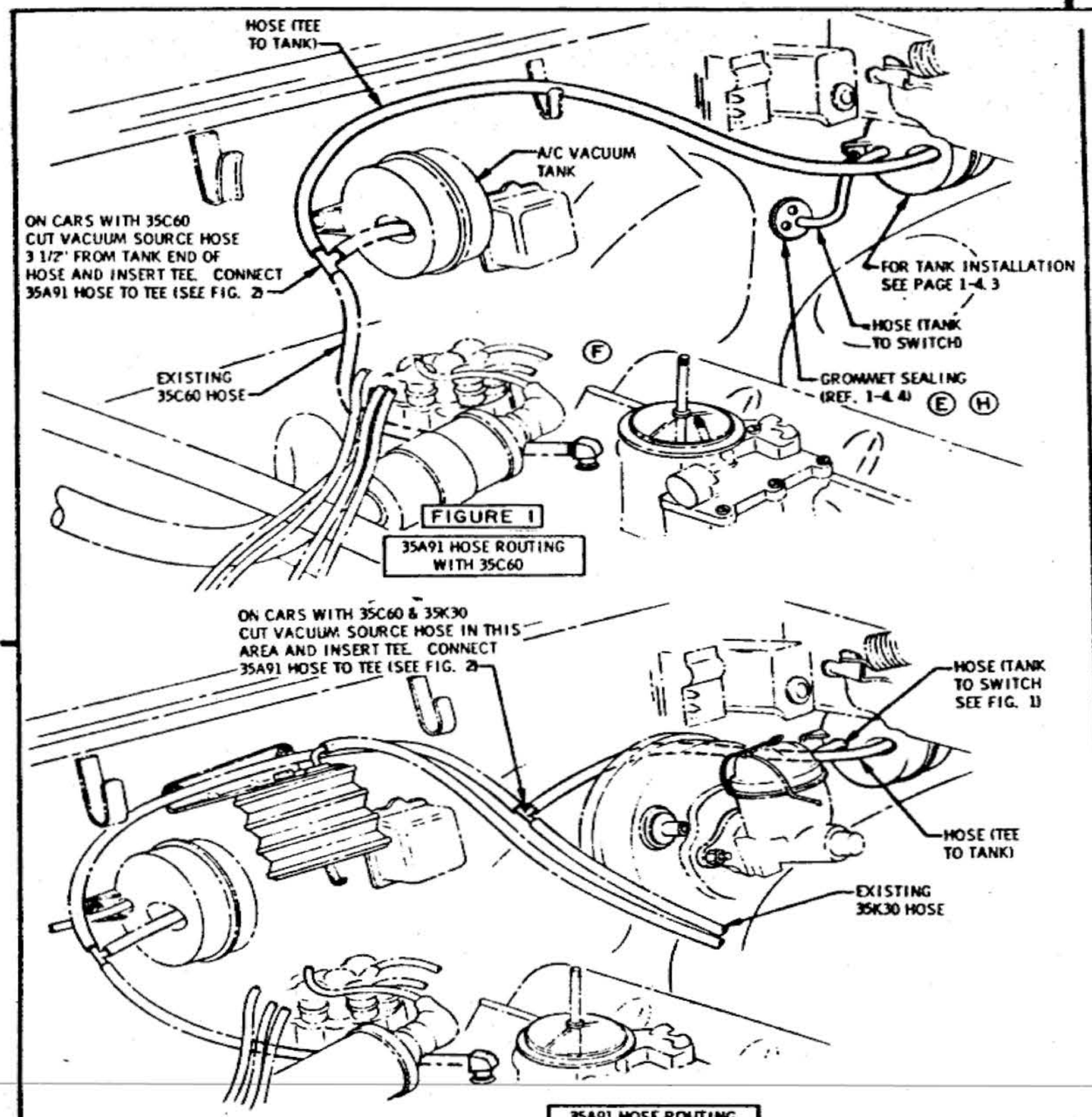

FIGURE 1

35A91 HOSE ROUTING WITH 35C60

35A91 HOSE ROUTING WITH 35C60 & 35K30

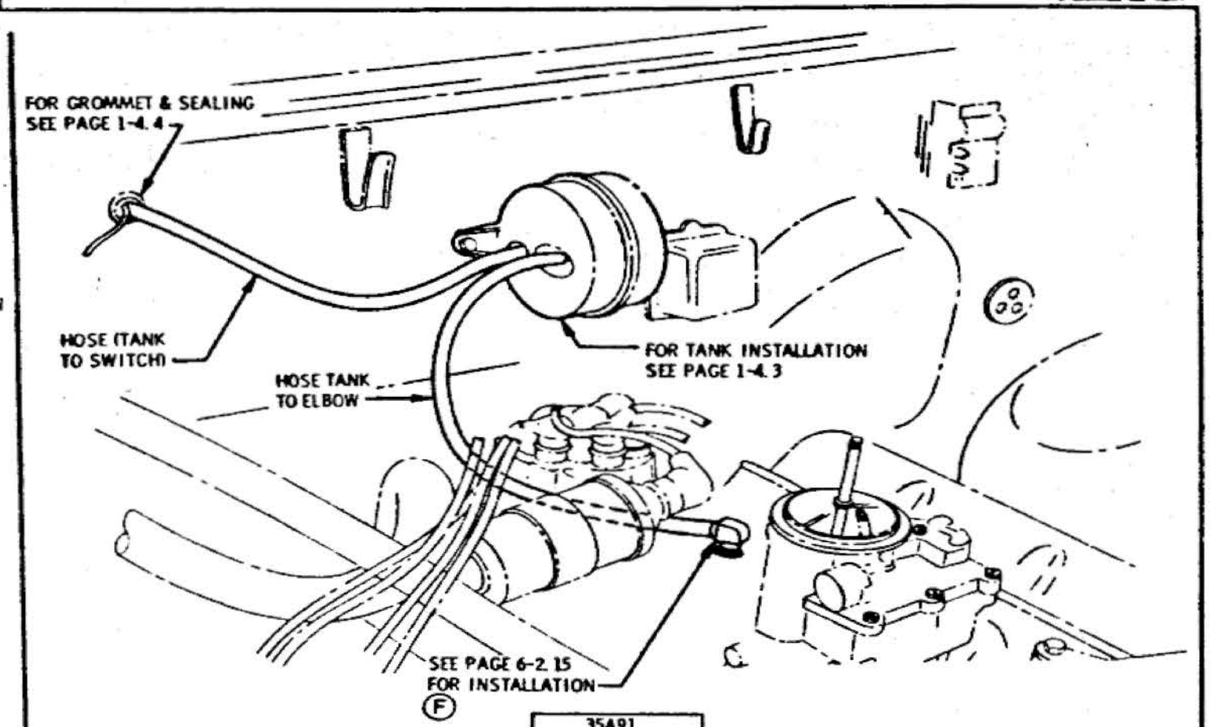

35A91 HOSE ROUTING

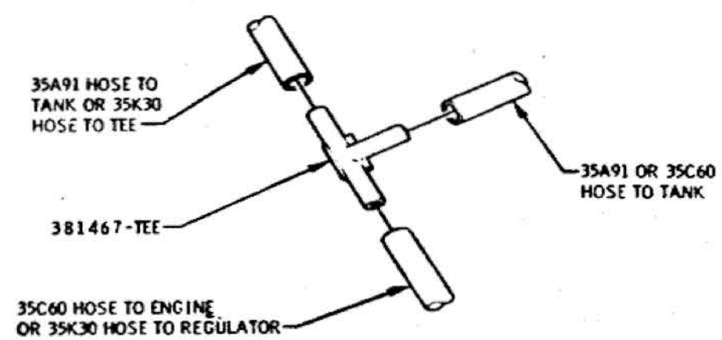

FIGURE 2

SEE PAGE 1-9.5 FOR PART NUMBERS

V8 VACUUM TRUNK RELEASE (35A91) ENGINE COMPARTMENT

DATE	SYM	REVISION	DR.	CK.	DATE	SYM	REVISION	DR.	CK.	DATE	SYM	REVISION	DR.	CK.
										7-30-65	E	NOTE REVISED		VP
										6-18-65	D	WAS 983410 HOSE		VP
					12-1-65	H	WAS PAGE 1-4.3			6-2-65	C	VIEW REVISED		VP
					10-12-65	G	REDRAWN AND REVISED			6-2-65	B	VIEW REVISED		VP
					8-11-65	F2	NOTE REVISED			4-6-65	A	SEALER NOTE ADDED		VP

INSTALLATION **HOSE, PIPE AND CABLE ROUTING**

DATE MAR. 25, 1965

DR. BY TITUS

CHECKED H. VAN PELT

APPR.

FIRST USED 1966

SERIES A

ILLUSTRATION

REF. 35A91

PAGE 1-10.4

PART NO. 589998

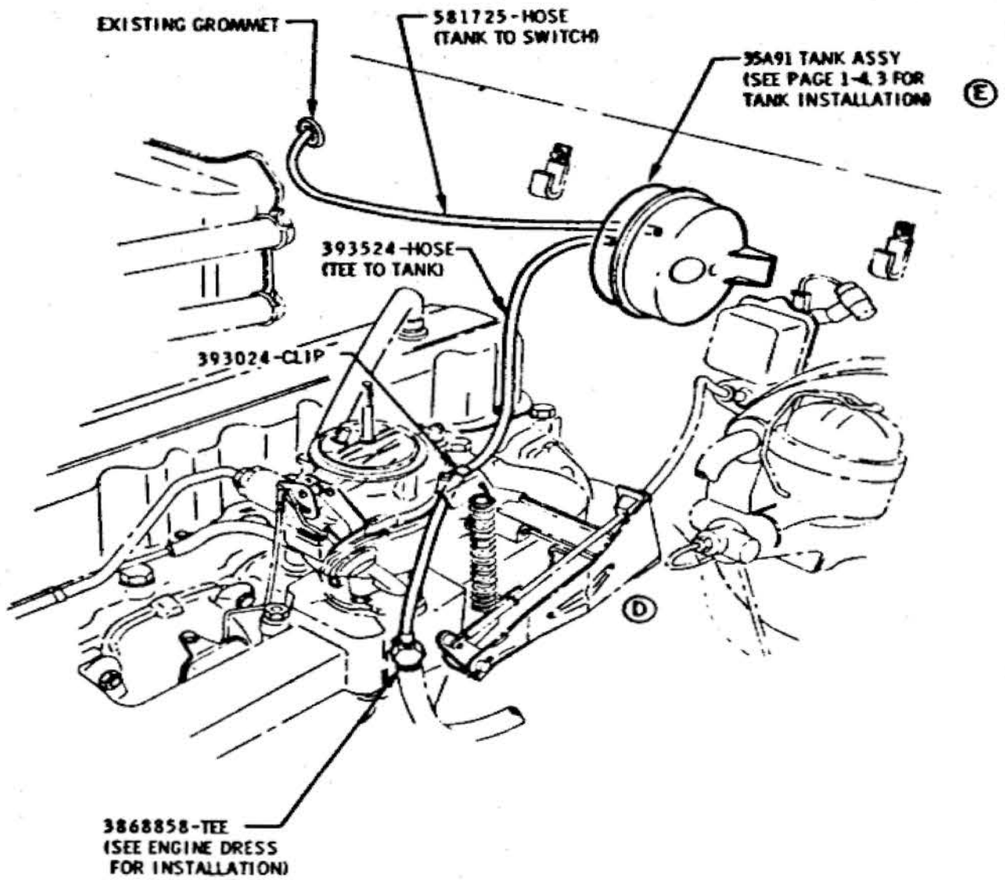

VACUUM TRUNK LATCH HOSE ROUTING EXCEPT A/C

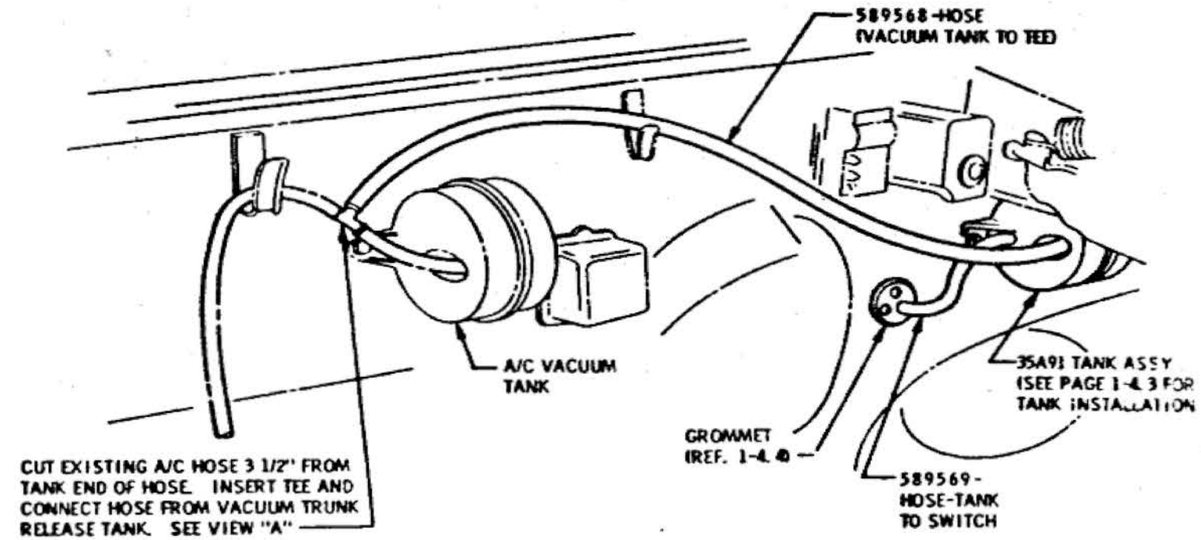

VACUUM TRUNK LATCH HOSE ROUTING WITH A/C

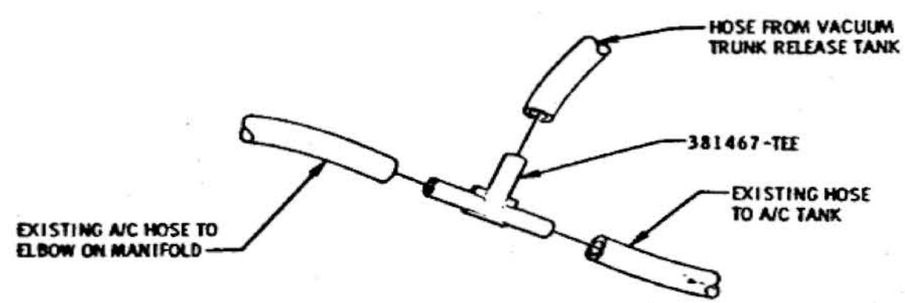

VIEW A

L6 VACUUM TRUNK LID RELEASE (ENGINE COMP.)

DATE	SYM	REVISION	DR.	CK.	DATE	SYM	REVISION	DR.	CK.	DATE	SYM	REVISION	DR.	CK.
										10-28-65	E	NOTE REVISED	CB	JDP
										8-3-65	D	BRACKET REVISED		
										8-3-65	C	NOTE REVISED		
										6-17-65	B	393524 HOSE NO. ADDED	JC	VD
										5-21-65	A	ROUTING REVISED		VD

INSTALLATION
DATE MAY 15, 1965
DR. BY J. GALL
CHECKED
APPR.
APPR.

HOSE, PIPE AND CABLE ROUTING

FIRST USED 1966 — Oldsmobile Service ILLUSTRATION

SERIES A — REF. 35A91 — PAGE 1-30.4A — PART NO. 589998

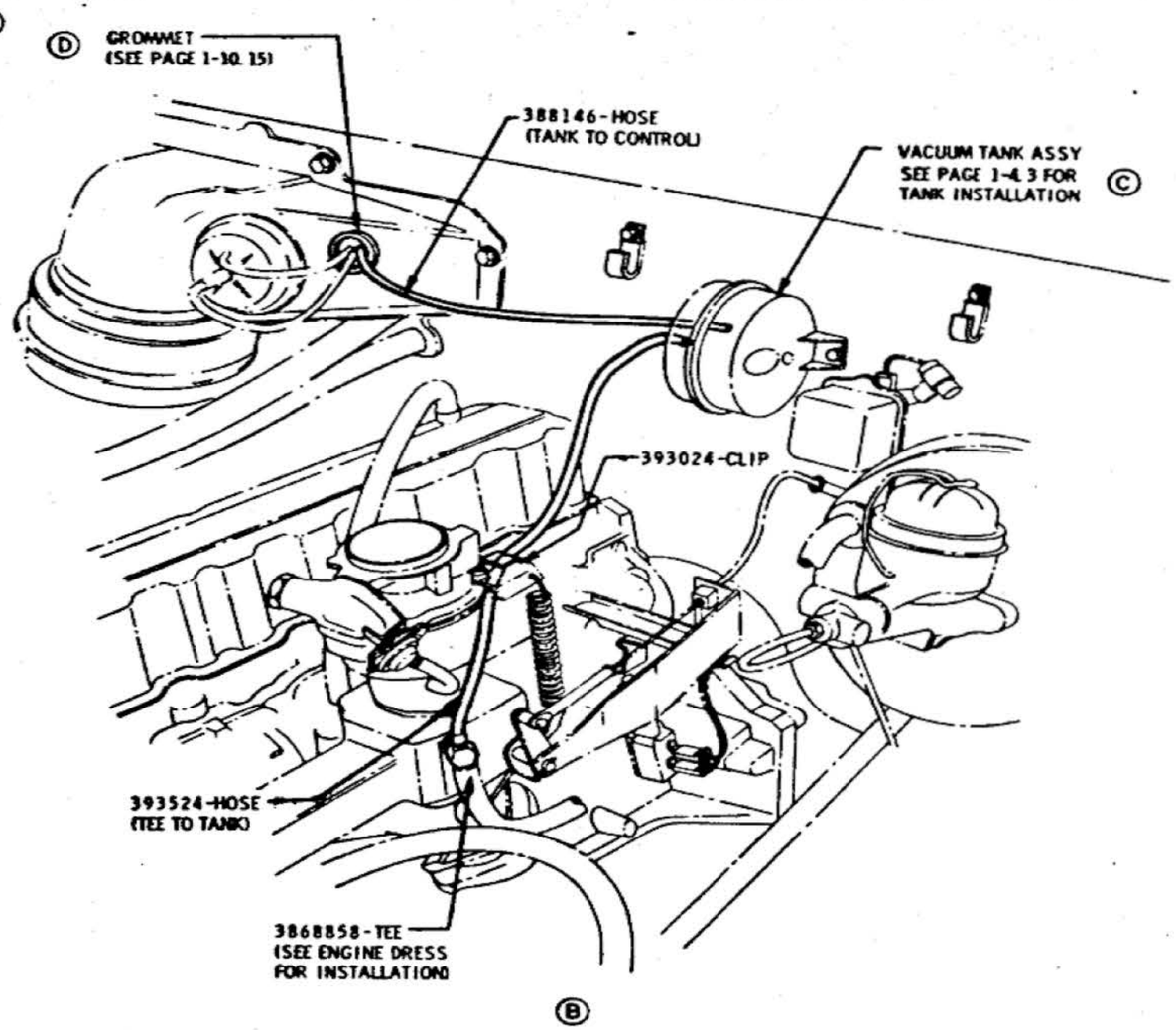

L6 A/C VACUUM HOSE ROUTING

DATE	SYM	REVISION	DR.	CK.	DATE	SYM	REVISION	DR.	CK.	DATE	SYM	REVISION	DR.	CK.
										1-17-66	D	NOTE REVISED	PM	DT
										10-28-65	C	NOTES ADDED	CG	DT
										8-5-65	B	REDRAWN & REVISED	CG	VP
										5-11-65	A	REELAY REVISED	CG	VP

INSTALLATION **HOSE, PIPE AND CABLE ROUTING**

DATE MAR. 19, 1965
DR. BY TITUS
CHECKED H. VAN BELT
APPR. R. E. Kelly

FIRST USED 1966
Oldsmobile Service ILLUSTRATION
SERIES A
REF. 35C60
PAGE 1-30.5
PART NO. 589998

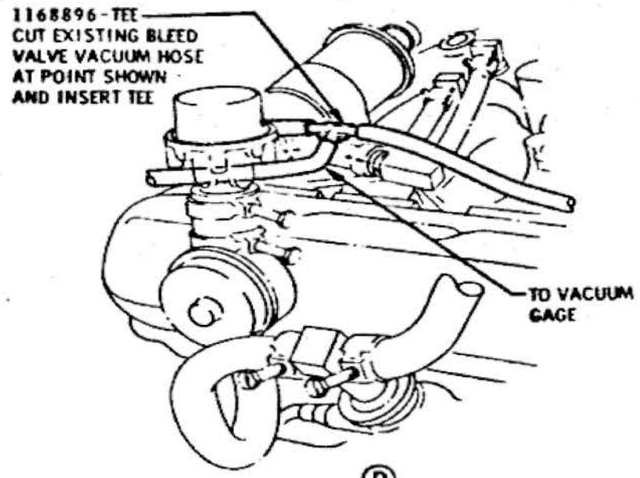

Ⓓ

VACUUM SOURCE FOR CARS WITH 35K19

EXCEPT 442

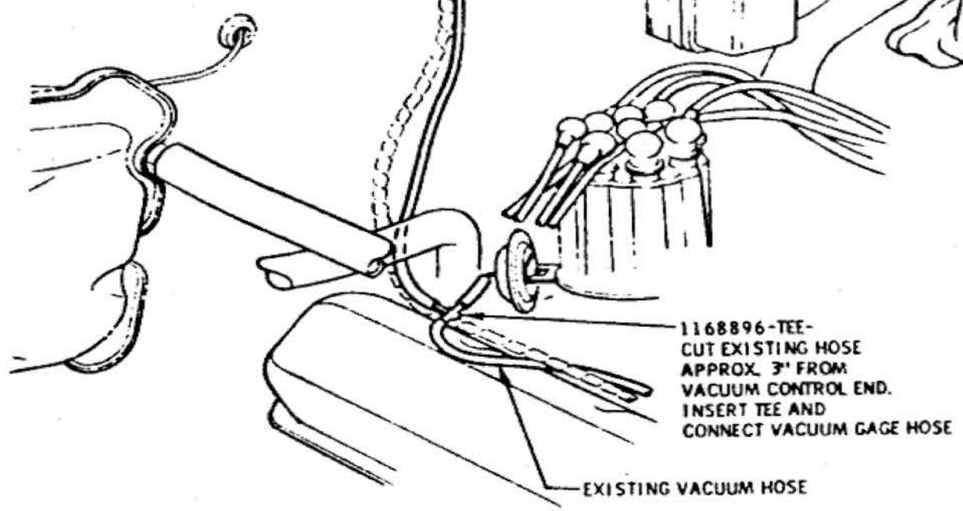

VACUUM SOURCE AND HOSE ROUTING ENGINE COMPARTMENT

(EXCEPT 35K19)

Ⓔ

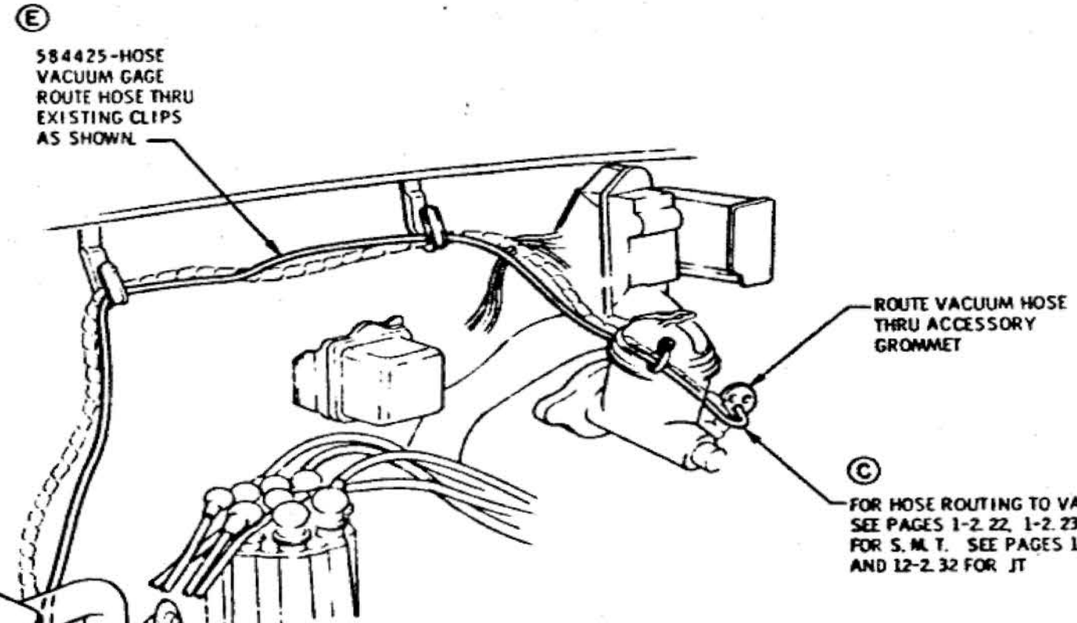

Ⓒ

FOR HOSE ROUTING TO VACUUM GAGE SEE PAGES 1-2.22, 1-2.23 AND 12-2.31 FOR S. M. T. SEE PAGES 1-2.25, 1-2.28 AND 12-2.32 FOR JT

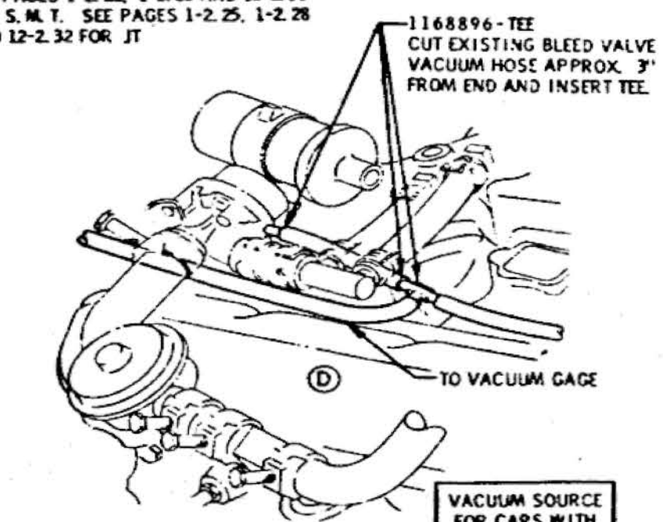

Ⓓ

VACUUM SOURCE FOR CARS WITH 35K19

442 ONLY

CONSOLE VACUUM GAGE HOSE (ENGINE COMP.)

DATE	SYM	REVISION	DR.	CK.	DATE	SYM	REVISION	DR.	CK.	DATE	SYM	REVISION	DR.	CK.
										8-31-65	F	WAS 3962 & 3964 HOSE	CG	DT
										10-26-65	D	VIEWS ADDED	BP	DT
										9-14-65	C	NOTE ADDED		DT
										8-21-65	B	VIEWS REMOVED		VP
										8-9-65	A	VIEWS ADDED		VP

INSTALLATION **HOSE, PIPE AND CABLE ROUTING**

DATE MAR. 19, 1965

DR. BY Ritus

CHECKED H. VAN PELT

APPR. G. NIMMRT

FIRST USED 1966

Oldsmobile Service ILLUSTRATION

SERIES A

REF. 35D55

PAGE 1-10.6

PART NO. 589998

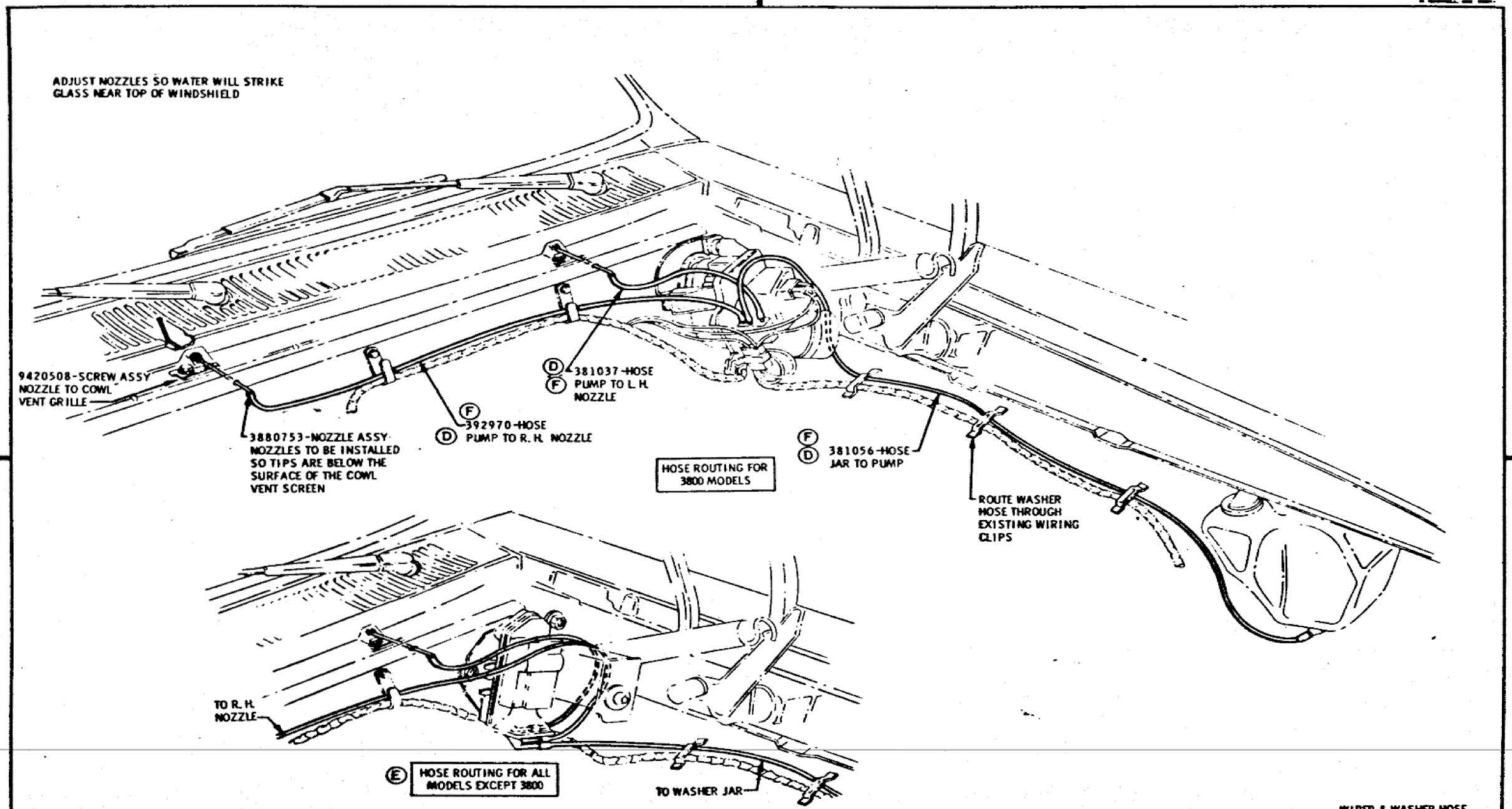

WIPER & WASHER HOSE

DATE	SYM	REVISION	DR.	CK.	DATE	SYM	REVISION	DR.	CK.	DATE	SYM	REVISION	DR.	CK.
										7-26-65	E	VIEW ADDED	BA	VP
										7-26-65	D1	HOSE NOS. REVISED	BA	VP
										6-18-65	C	HOSES RELOCATED	BA	VP
										4-6-65	B	WAS 3840766 NOZZLE	CG	VP
					9-30-65	F	PART NO'S REVISED	JJ	DT	4-6-65	A2	WAS 3825542-3 HOSE	CG	VP

INSTALLATION **HOSE, PIPE AND CABLE ROUTING**

DATE MAR. 23, 1965 | DR. BY TITUS | CHECKED H. VAN PELT | APPR. | APPR.

FIRST USED 1966 | Oldsmobile Graphic Illustration | SERIES A | REF. 35C14 | PAGE 1-10.7 | PART NO. 589998

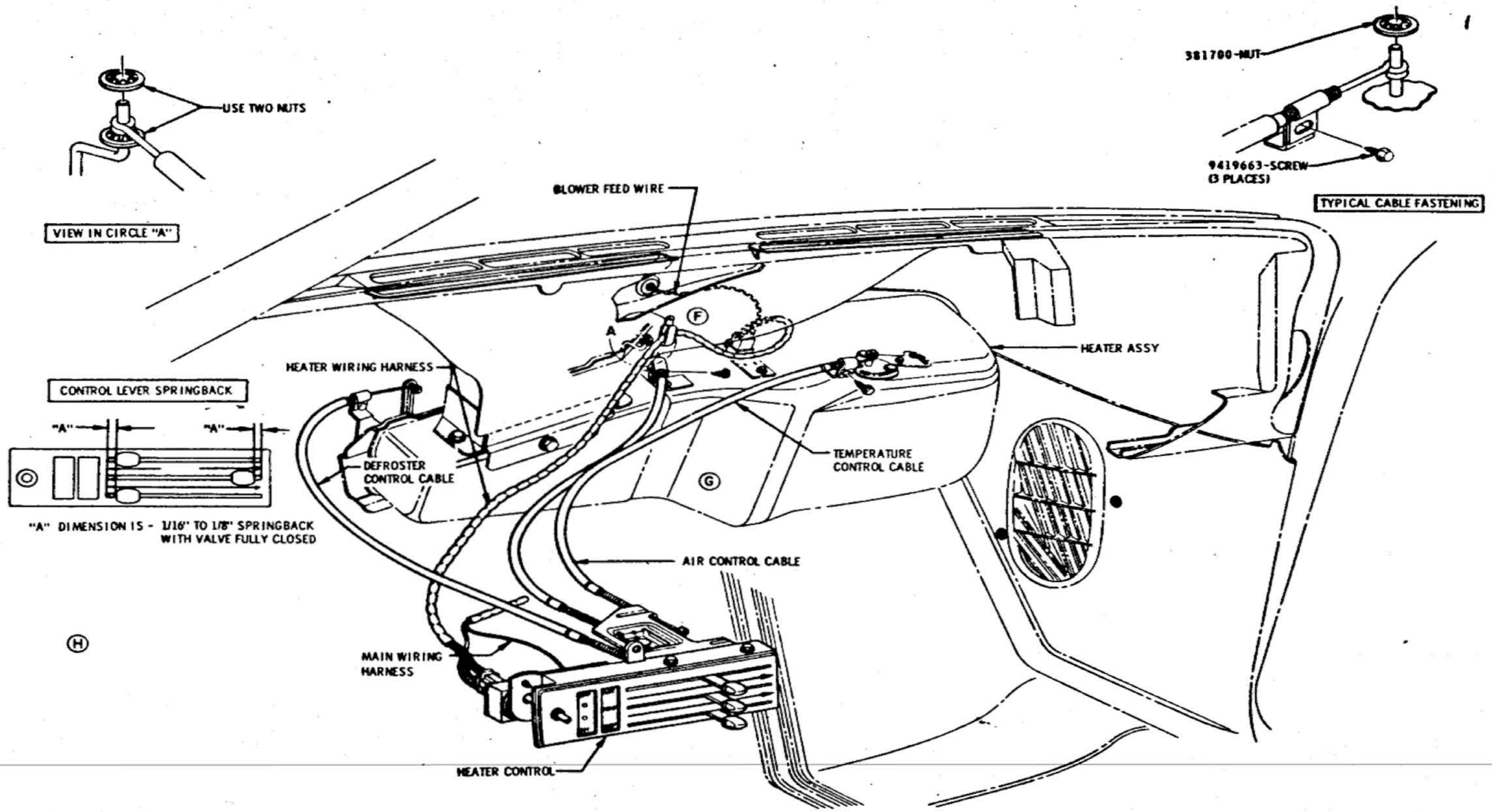

STANDARD HEATER CONTROL CABLES

DATE	SYM	REVISION	DR.	CK.	DATE	SYM	REVISION	DR.	CK.	DATE	SYM	REVISION	DR.	CK.
										11-15-65	E	VIEW ADDED		DT
										9-16-65	D	CHART REVISED		DT
					4-12-66	H	CHART REMOVED		DT	8-10-19	C	NOTE REVISED		VP
					1-20-66	G	TAPE NOTE REMOVED			8-11-65	B	NOTES REVISED		VP
					1-7-66	F	TAPE REMOVED & WIRE ROUTING		DT	7-28-65	A	REDRAWN		

INSTALLATION **HOSE, PIPE AND CABLE ROUTING**

DATE APRIL 9, 1965

DR. BY TITUS

CHECKED H VAN PELT

APPR. H F Schaffer

APPR.

FIRST MODEL YEAR 1966

Oldsmobile Service ILLUSTRATION

SERIES A

REV. 1 APR

PAGE 1-10.9

PART NO. 589998

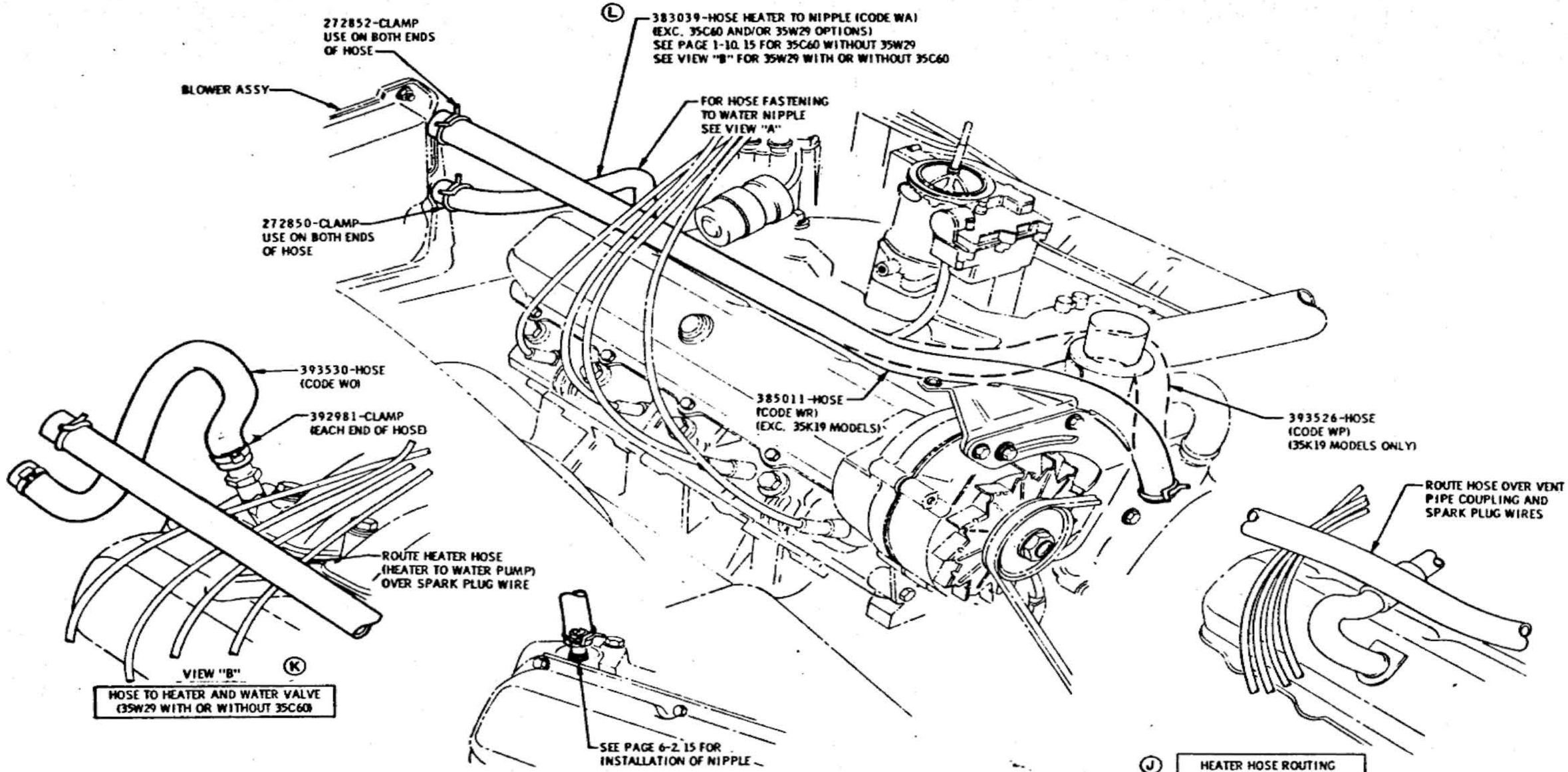

V8 HEATER WATER HOSES

DATE	SYM	REVISION	DR.	CK.	DATE	SYM	REVISION	DR.	CK.	DATE	SYM	REVISION	DR.	CK.
					9-30-65	K	VIEW REVISED		DT	6-16-65	E	CODES ADDED		VP
					9-30-65	J	VIEW ADDED		DT	6-11-65	D	PART NO'S ADDED	CG	VP
					8-19-65	H	PART NUMBER ADDED		VP	6-24-65	C	VIEW REVISED		VP
					7-30-65	G	NOTE ADDED		VP	5-24-65	B	HOSE REVISED		VP
10-6-65	L	WAS 383069 HOSE		DT	7-21-65	F	REDRAWN			5-21-65	A	VIEW REMOVED		VP

INSTALLATION
DATE MAR. 25, 1965
DR. BY Titus
CHECKED
APPR.

HOSE, PIPE AND CABLE ROUTING

FIRST USED 1966
Oldsmobile Div. ILLUSTRATION
SERIES A
REF. 1AEC
PAGE 1-10.10
PART NO. 589998

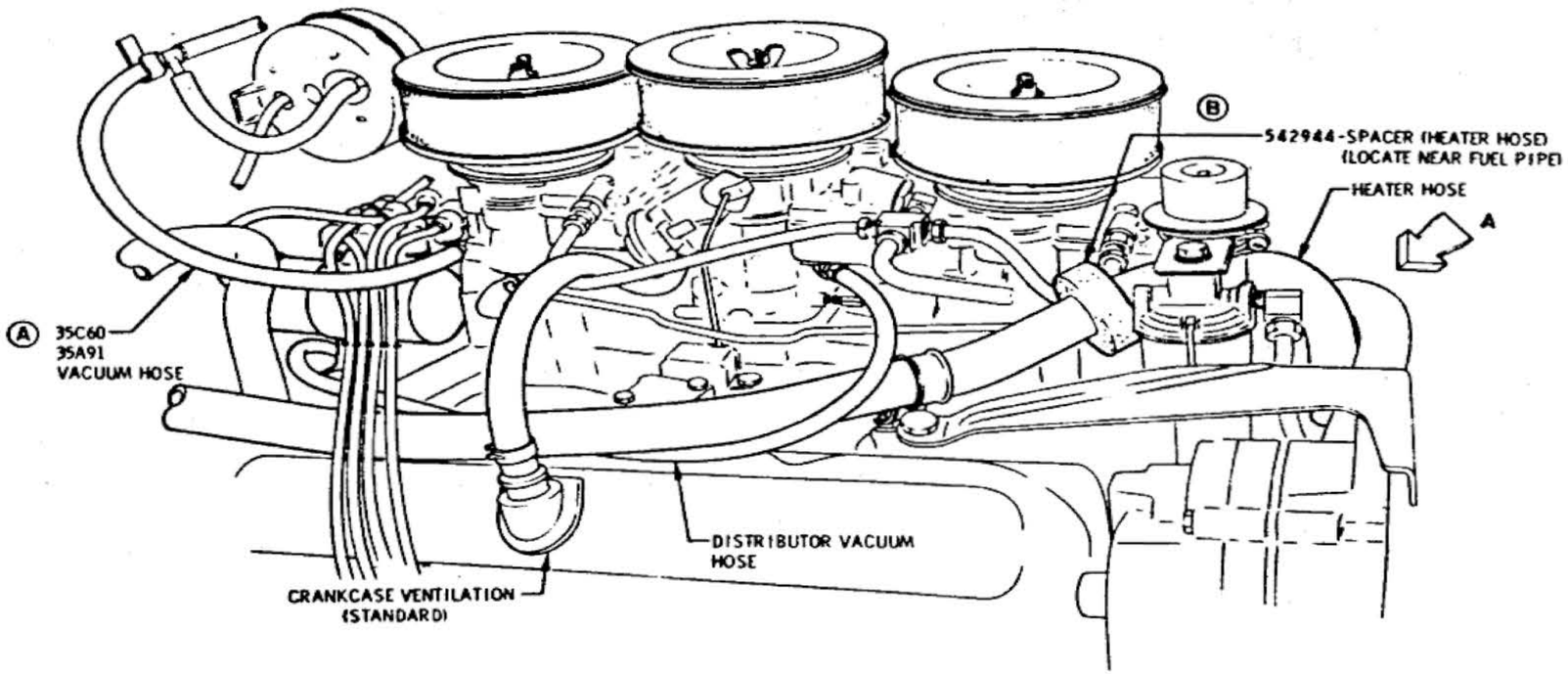

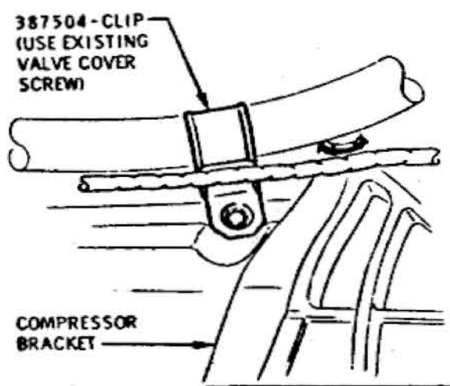

WATER HOSE CLIP FASTENING FOR 35C60 MODELS

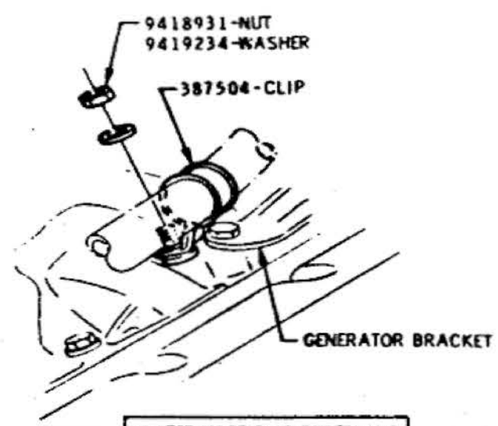

WATER HOSE CLIP FASTENING FOR STANDARD MODELS

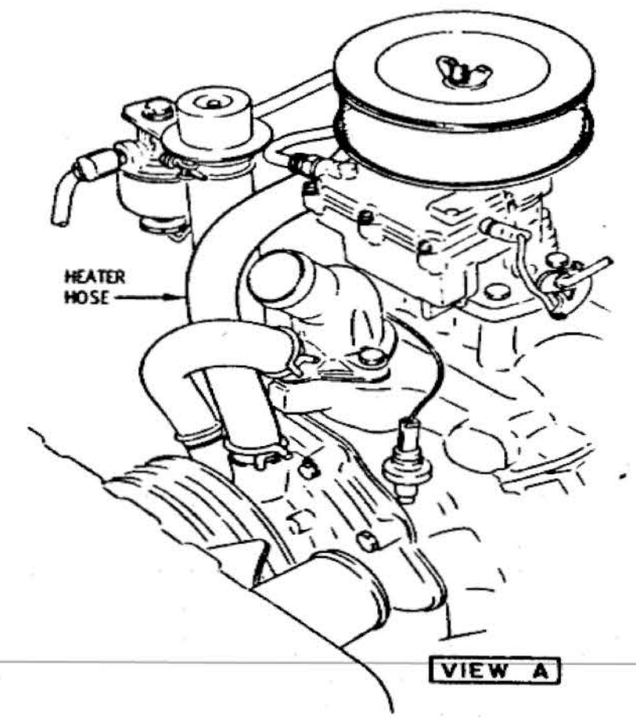

VIEW A

(35L69 HEATER WATER AND VACUUM HOSES)

DATE	SYM	REVISION	DR.	CK.	DATE	SYM	REVISION	DR.	CK.	DATE	SYM	REVISION	DR.	CK.
										9-29-66	B	SPACER ADDED		DT
										1-26-66	A	35K30 REMOVED	JG	MS

INSTALLATION HOSE, PIPE AND CABLE ROUTING

DATE NOV. 18, 1965
DR. BY GOODWIN
CHECKED JOHN
APPR. H.H.
APPR.

FIRST USED 1966

Oldsmobile GRAPHIC ILLUSTRATION

SERIES A

REF.

PAGE 1-10.11

PART NO. 589998

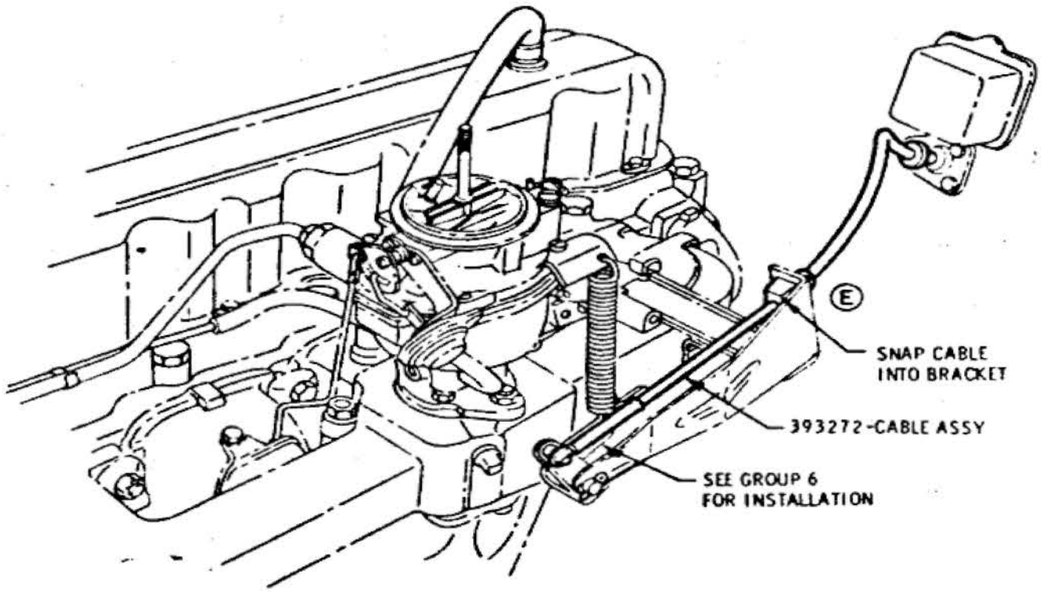

THROTTLE CONTROL CABLE ROUTING

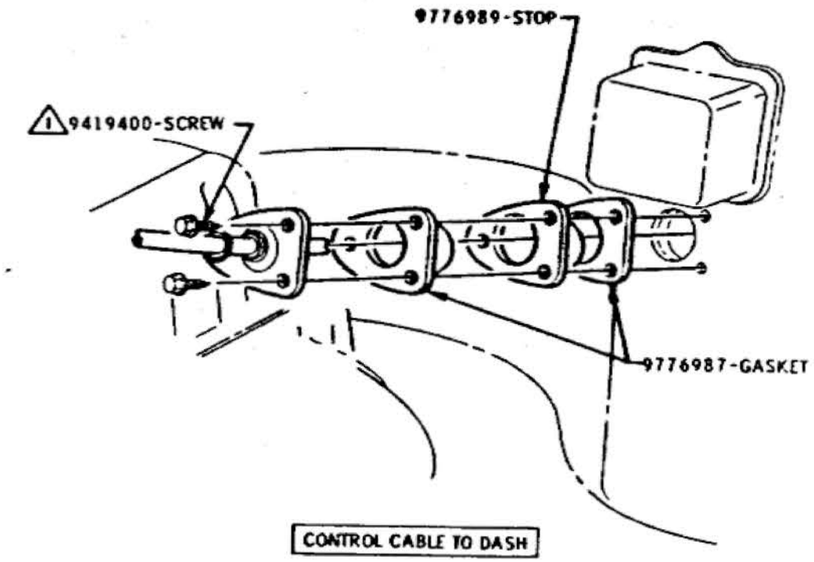

CONTROL CABLE TO DASH

1 96-144 LB. IN.

L6 THROTTLE CONTROL CABLE

DATE	SYM	REVISION	DR.	CK.	DATE	SYM	REVISION	DR.	CK.	DATE	SYM	REVISION	DR.	CK.
										8-3-65	E	BRACKET REDRAWN		
										7-21-65	D	REDRAWN		
										5-25-65	C	WAS PAGE 1-10.19		
										5-24-65	B	PART NO. ADDED		
										4-26-65	A	WAS PAGE 1-10.18		

INSTALLATION **NOSE, PIPE AND CABLE ROUTING**

DATE APRIL 12, 1965
DR. BY S.A. McDONALD
CHECKED
APPR. H. PAGE
APPR.

FIRST USED 1966
SERIES A
ILLUSTRATION
REF. TR 5912
PAGE 1-10.12
PART NO. 589998

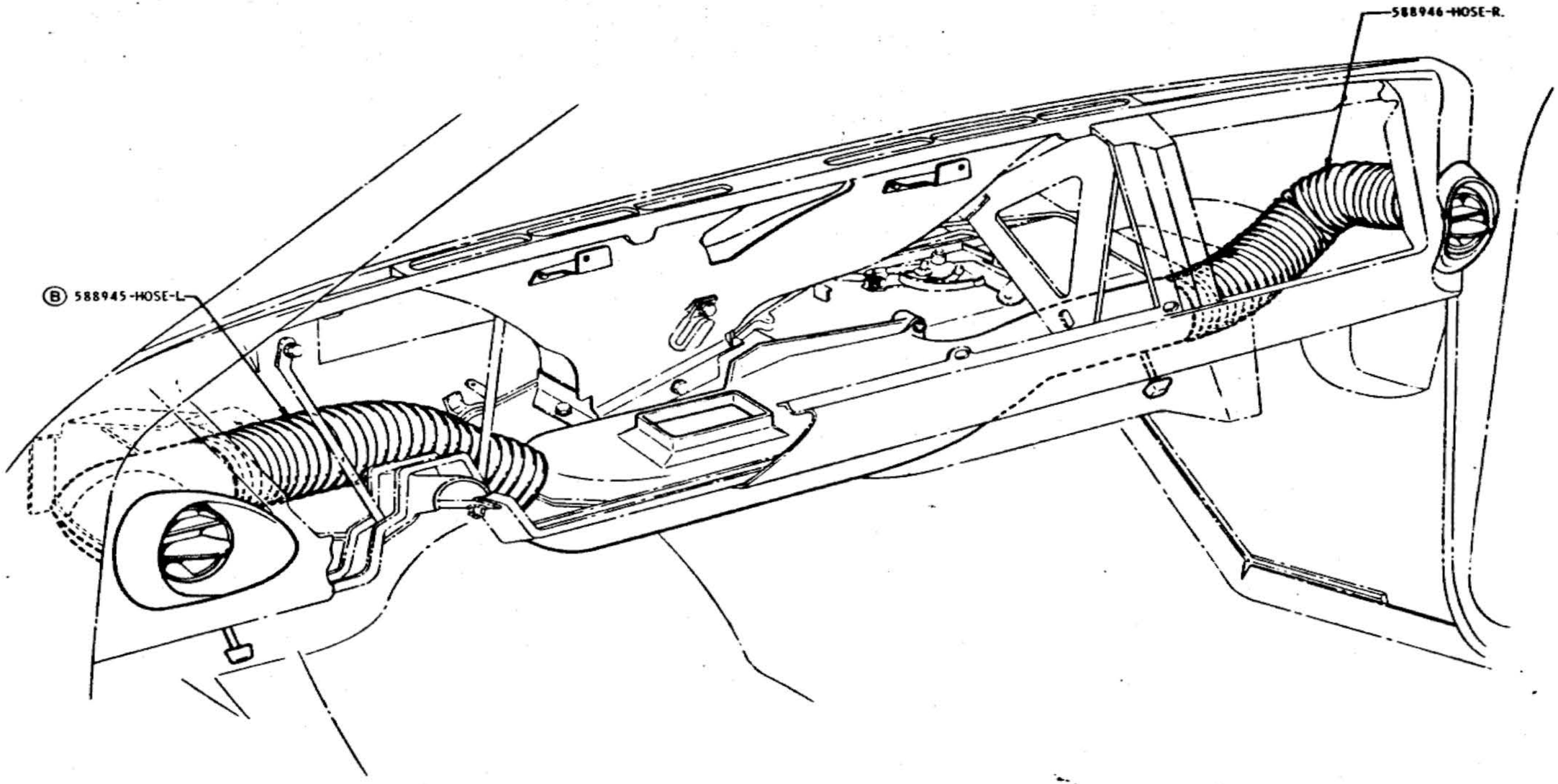

A/C END OUTLET HOSES

DATE	SYM	REVISION	DR.	CK.	DATE	SYM	REVISION	DR.	CK.	DATE	SYM	REVISION	DR.	CK.
										9-21-66	B	HAS 589947		
										7-12-66	A	REDRAWN		

INSTALLATION HOSE, PIPE AND CABLE ROUTING

DATE MAR. 28, 1966
DR. BY TITUS
CHECKED H. VAN PELT
APPR. L. E. Mulenfyke
APPR.

FIRST USED 1966
Oldsmobile Div. ILLUSTRATION
SERIES A
REF. 55C60
PAGE 1-10.13
PART NO. 589998

INSTALL SCREW BEFORE HEATER IS INSTALLED TO CAR. AFTER INSTALLING HEATER, SLIDE CABLE ASSY CLIP BEHIND SCREW AND SECURE.

381700-NUT

9419663-SCREW

SELECTOR VALVE ONLY

ROUTE VACUUM HOSES AND WIRING HARNESS THRU GROMMET IN THIS AREA

ROUTE TEMP. CONT. CABLE BEHIND SWITCH AS SHOWN

DEFROSTER CABLE

SELECTOR VALVE CABLE

ROUTE THROUGH EXISTING CLIP ON DEFROSTER NOZZLE

SCOTCH MASKING TAPE

FASTENINGS FOR SELECTOR VALVE CABLE

CONTROL LEVER SPRINGBACK

1/16" TO 1/8" SPRINGBACK WITH VALVE FULLY CLOSED

381700-NUT

9419663-SCREW

TYPICAL FASTENINGS FOR DEFROSTER AND TEMPERATURE CONTROL CABLE

VACUUM HOSE, WIRE AND CABLE ROUTING

CABLE ADJUSTMENTS

TEMPERATURE DOOR CABLE

1. ADJUST CABLE TO OBTAIN 1/16 - 1/8 SPRINGBACK WITH VALVE IN FULL COLD POSITION.

SELECTOR DOOR CABLE

1. SET LEVER IN THE "NORMAL" POSITION.
2. PUSH SELECTOR DOOR OPEN AGAINST THE SEAL (AIR CONDITIONING POSITION).
3. TIGHTEN CABLE ATTACHING SCREW.

DEFROSTER DOOR CABLE

1. SET HEATER DEFROSTER CABLE IN "OFF" POSITION.
2. PULL DEFROSTER DOOR CRANK FULL LEFT (DOOR UP).
3. TIGHTEN CABLE ATTACHING SCREW.

A/C CONTROL CABLES & VACUUM HOSES

DATE	SYM	REVISION	DR.	CK.	DATE	SYM	REVISION	DR.	CK.	DATE	SYM	REVISION	DR.	CK.
										4-12-66	E	ADJUSTMENT REVISED		DT
										2-10-66	D	1106080-CLAMP REM'VD		DT
										11-16-65	C	VIEW ADDED		DT
										9-16-65	B	ADJUSTMENTS REVISED		DT
										7-21-65	A	REDRAWN		

INSTALLATION **HOSE, PIPE AND CABLE ROUTING**

DATE APRIL 29, 1965 — DR. BY TITUS — CHECKED H. VAN PELT — APPR. — APPR.

FIRST USED 1966 — SERIES A — REF.

Oldsmobile Classic ILLUSTRATION

PAGE 1-10.14

PART NO. 589998

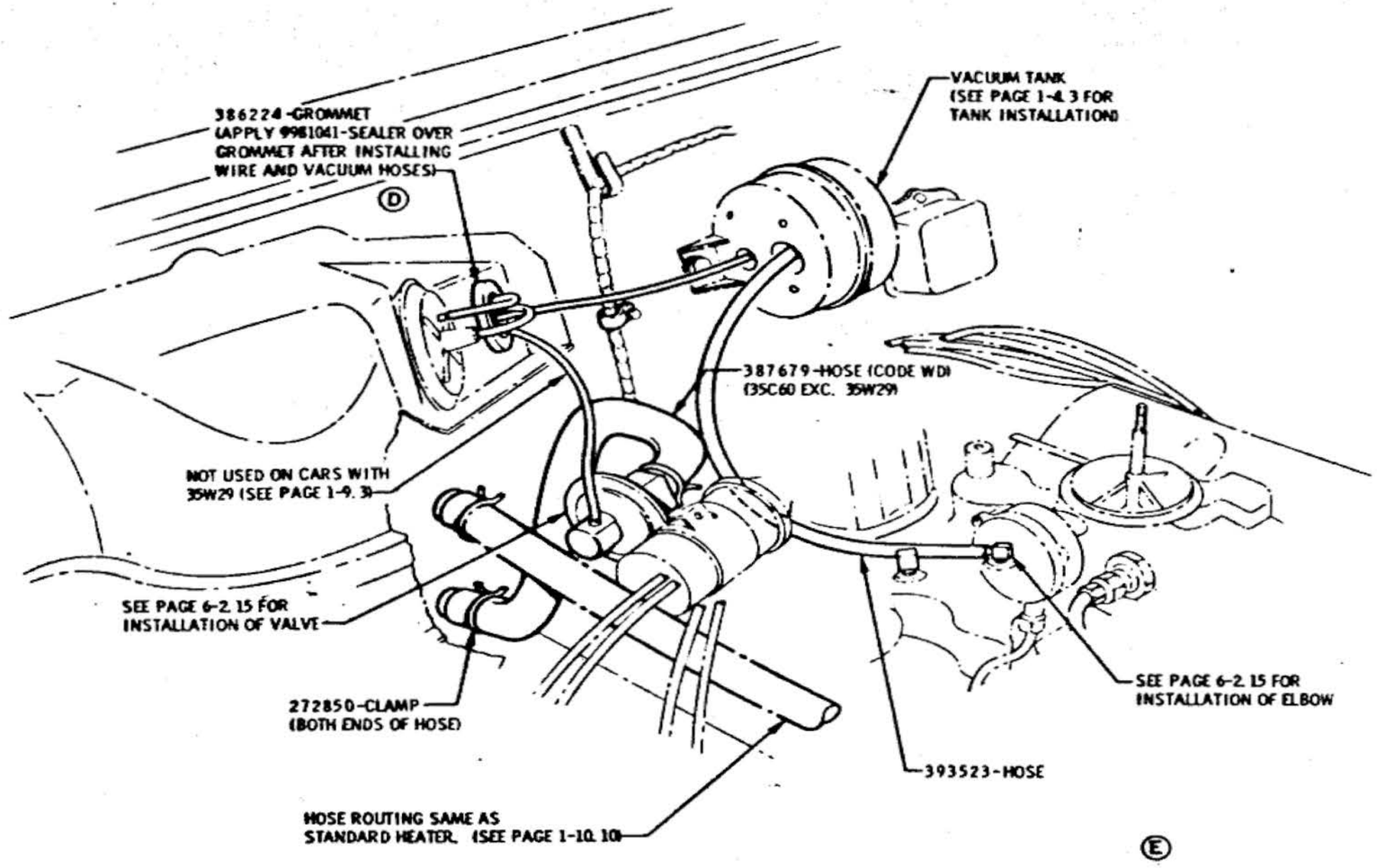

V8 A/C HEATER & VACUUM HOSES

DATE	SYM	REVISION	DR.	CK.	DATE	SYM	REVISION	DR.	CK.	DATE	SYM	REVISION	DR.	CK.
										7-30-65	E	DRAWING REVISED	VP	VP
										6-28-65	D	NOTE ADDED	CG	DT
										6-28-65	C	CODES ADDED		VP
										6-11-65	B	PART NUMBER ADDED	CG	VP
										5-24-65	A	HOSE REVISED		VP

INSTALLATION **HOSE, PIPE AND CABLE ROUTING**

DATE APRIL 7, 1965
DR. BY T. TUS
CHECKED H. VAN PELT
APPR. H. Fitzpatrick
APPR.

FIRST USED 1966

Oldsmobile ILLUSTRATION

SERIES A

REF. 35C60

PAGE 1-10.15

PART NO. 589998

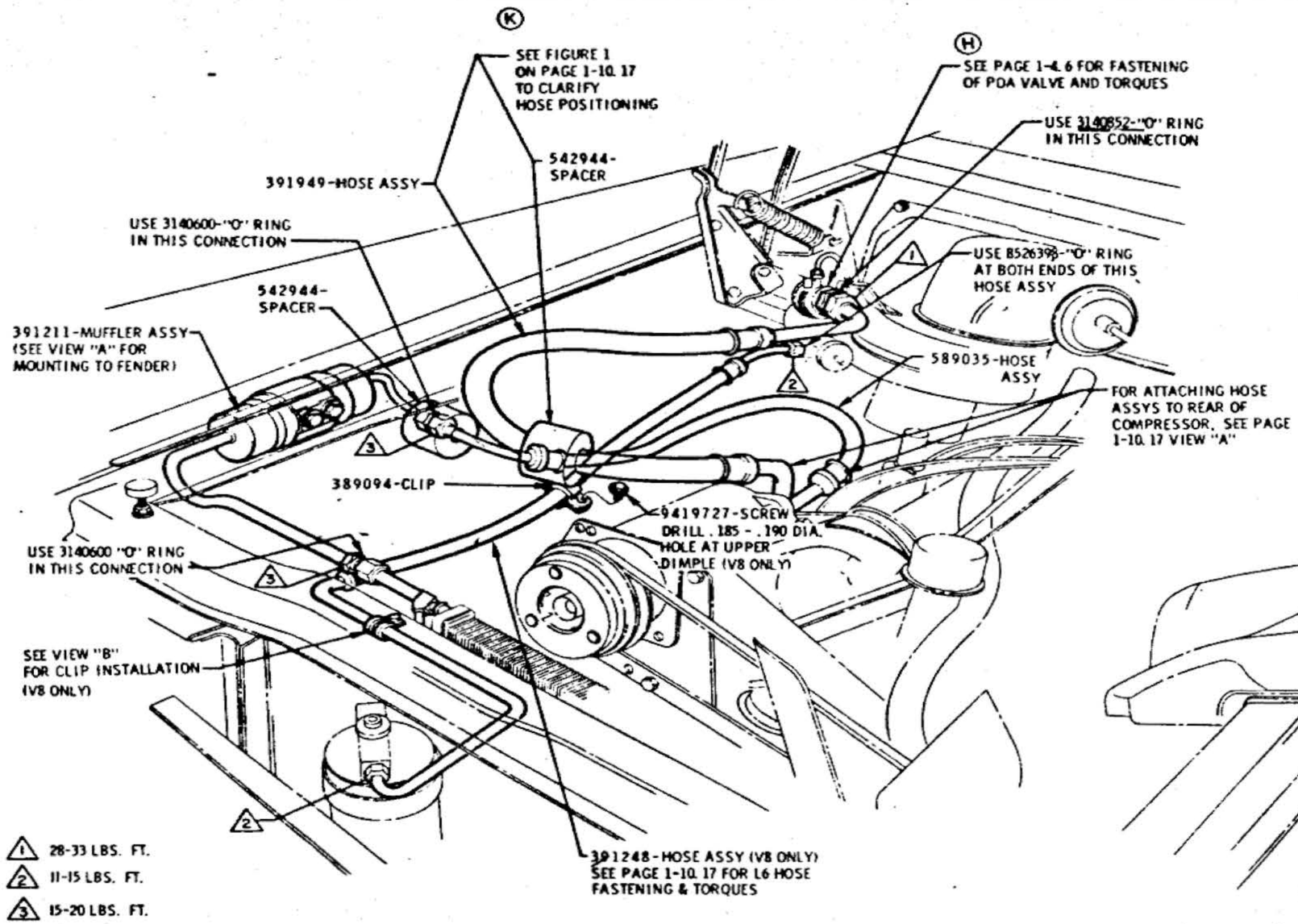

HOSE ASSY ROUTINGS

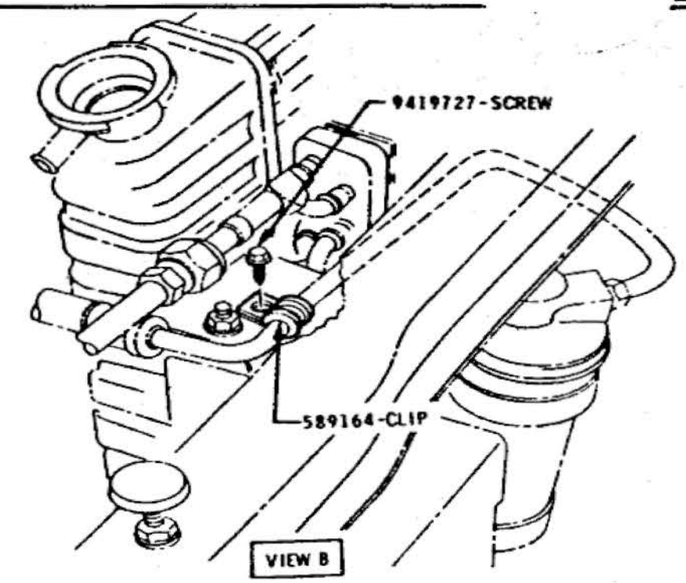

VIEW B

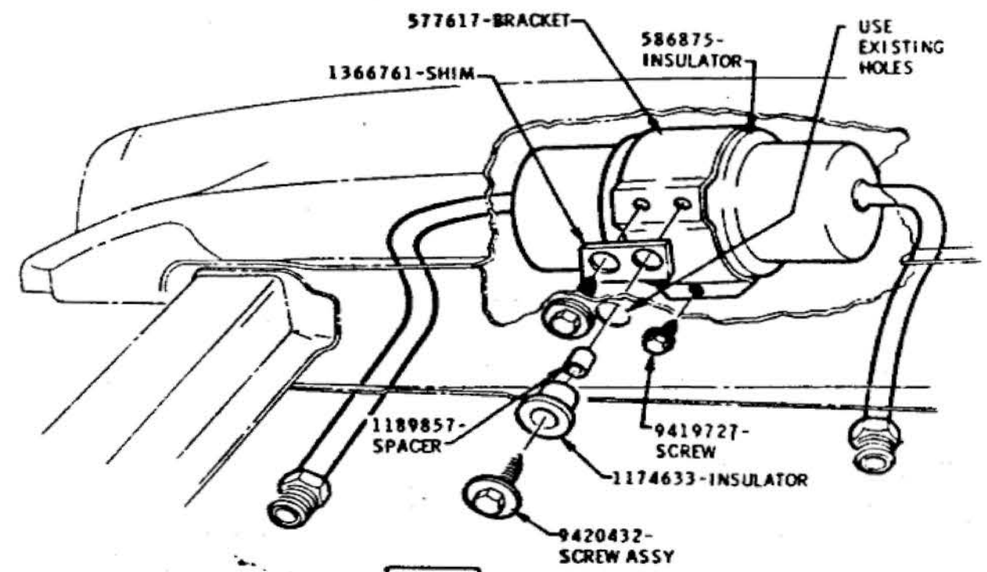

VIEW A

MUFFLER ASSY TO FENDER

FOR "O" RING LUBRICATION, SEE PAGE 0-1.18

J F

A/C MUFFLER & HOSES (ENGINE COMP.)

DATE	SYM	REVISION	DR.	CK.	DATE	SYM	REVISION	DR.	CK.	DATE	SYM	REVISION	DR.	CK.
					9-17-65	K	NOTE ADDED	[illegible]	DT	9-1-65	E	TORQUES ADDED	GR	DT
					9-17-65	J	NOTE REVISED	[illegible]	DT	8-3-65	D	NOTE ADDED	CG	VP
					9-17-65	H	NOTE ADDED	[illegible]	DT	[illegible]	C	NOTE REVISED	[illegible]	VP
					9-13-65	G	TORQUES REVISED	[illegible]	DT	6-28-65	B	PART NO ADDED	JA	DT
					9-1-65	F	[illegible]	[illegible]	DT	6-11-65	A	VIEW REVISED & REDWN	[illegible]	VP

INSTALLATION	HOSE, PIPE AND CABLE ROUTING		
DATE MAY 3, 1965	FIRST USED 1966	Oldsmobile Service ILLUSTRATION	PAGE 1-10.16
DR. BY B PARKER			
CHECKED H VAN PELT	SERIES A	REF. 35C60	PART NO. 589998
APPR. [illegible]			
APPR.			

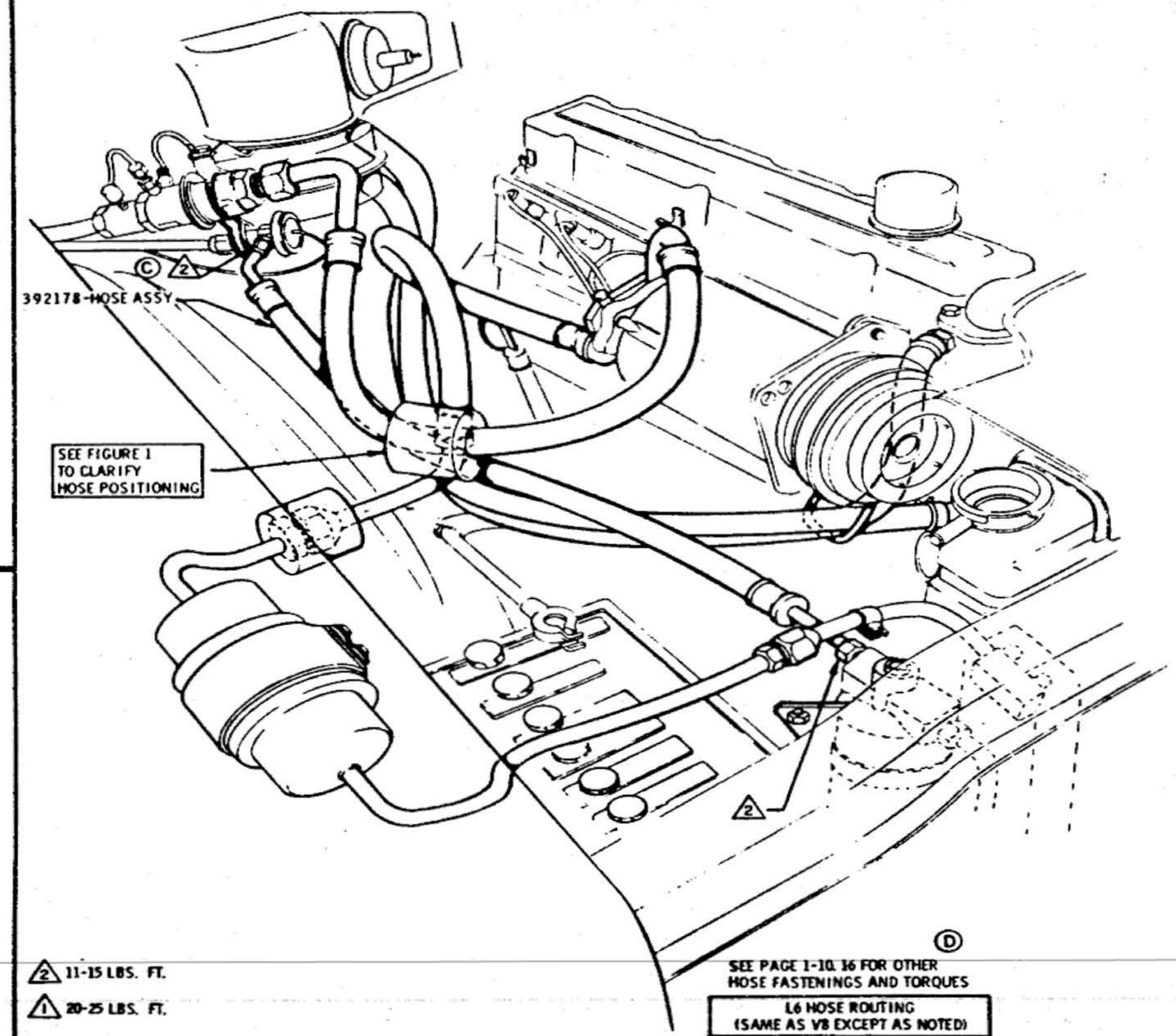

L6 HOSE ROUTING (SAME AS V8 EXCEPT AS NOTED)

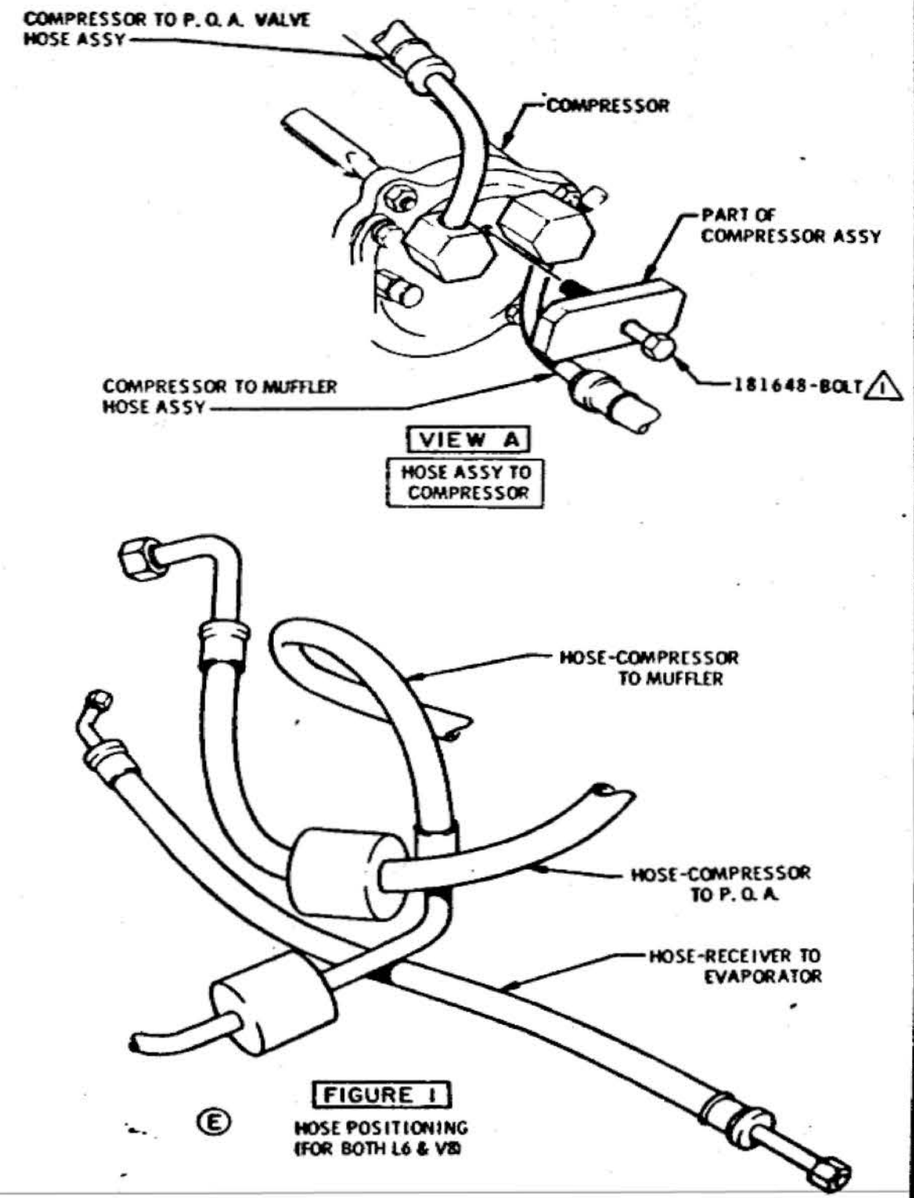

FIGURE 1
HOSE POSITIONING (FOR BOTH L6 & V8)

2 11-15 LBS. FT.

1 20-25 LBS. FT.

AIR CONDITIONING HOSE ROUTING (ENGINE COMPARTMENT)

DATE	SYM	REVISION	DR.	CK.	DATE	SYM	REVISION	DR.	CK.	DATE	SYM	REVISION	DR.	CK.
										9-20-65	E	FIGURE 1 ADDED		DT
										9-13-65	D	NOTE REVISED		DT
										9-13-65	C	TORQUE ADDED	GR	DT
										7-30-65	B	VIEW REMOVED		VP
										6-11-65	A	NOTE ADDED		VP

INSTALLATION
DATE MAY 3.1965
DR. BY B. PARKER
CHECKED H. VAN PELT
APPR.

HOSE, PIPE AND CABLE ROUTING

FIRST USED 1966
SERIES A
REF. 35C60
PAGE 1-10.17
PART NO. 589998

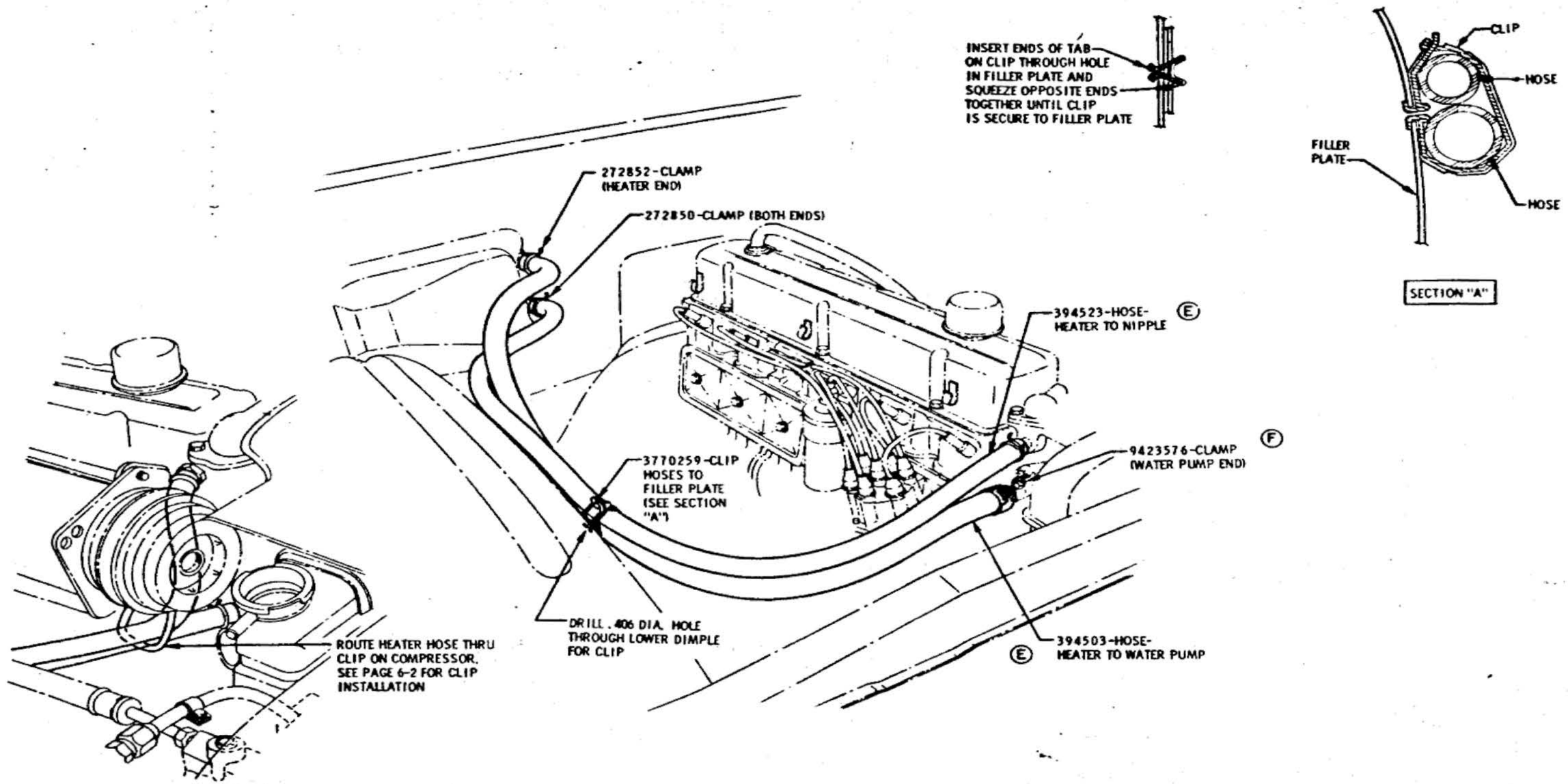

HOSE ROUTING ON CARS WITH AIR CONDITIONING

L6 STANDARD HEATER WATER HOSES

DATE	SYM	REVISION	DR.	CK.	DATE	SYM	REVISION	DR.	CK.	DATE	SYM	REVISION	DR.	CK.
										10-6-65	E	PART NO'S REVISED		DT
										8-30-65	D	REDRAWN		
										7-30-65	C	VIEWS ADDED		
										4-26-65	B	NEW VIEWS ADDED		
					10-1-65	E	9423576 CLAMP ADDED		DT	4-26-65	A	VIEWS MOVED TO PAG. 18		

INSTALLATION — HOSE, PIPE AND CABLE ROUTING

DATE APRIL 26, 1965
DR. BY TITUS
CHECKED
APPR.
APPR.

FIRST USED 1966
ILLUSTRATION
SERIES A
REF. 1ABC
PAGE 1-10.18
PART NO. 589998

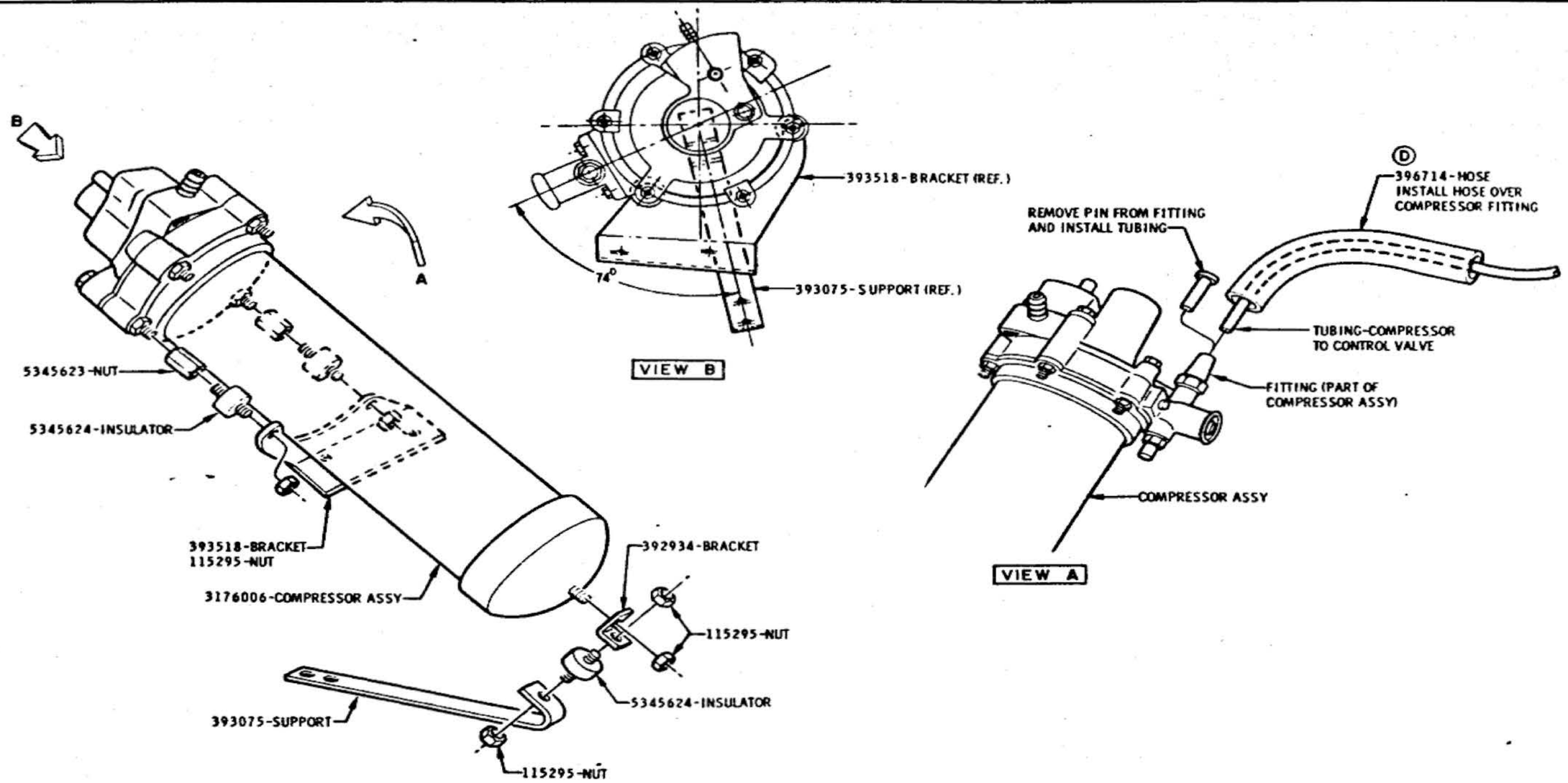

(AUTOMATIC SUPERLIFT COMPRESSOR ASSY)

DATE	SYM	REVISION	DR.	CK.	DATE	SYM	REVISION	DR.	CK.	DATE	SYM	REVISION	DR.	CK.
										3-7-66	D	HOSE ADDED		
										8-31-65	C	393358 REMOVED		
										7-21-65	B	REDRAWN		
										6-18-65	A	593232 REDRAWN PICTORIALLY		

INSTALLATION **HOSE, PIPE AND CABLE ROUTING**

DATE JUNE 18, 1965 | FIRST USED 1966 | Oldsmobile Division ILLUSTRATION | PAGE 1-10.19

DR. BY W. E. MASON | CHECKED | APPR. | APPR. | SERIES A | REF. | PART NO. 589998

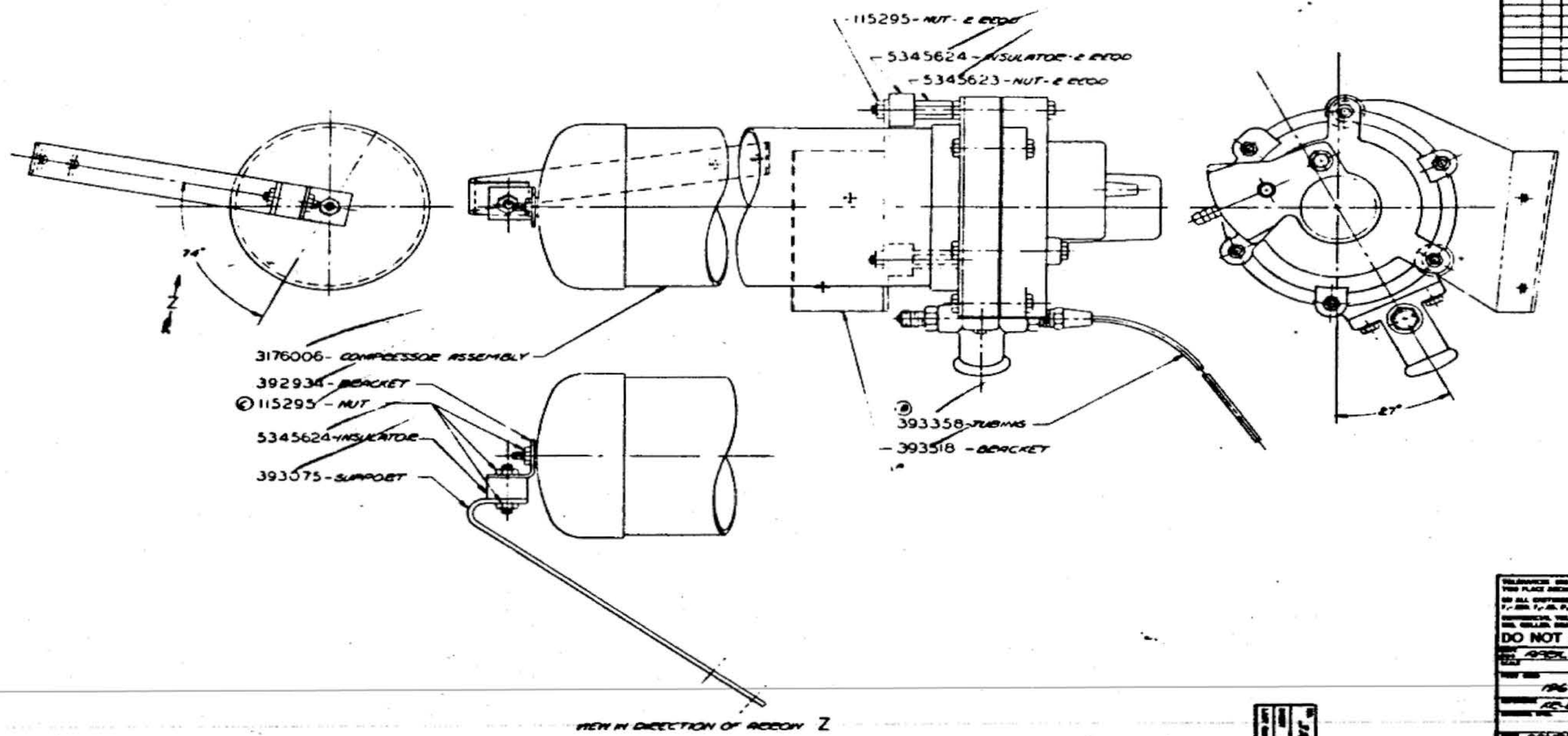

OLDSMOBILE DIVISION
GENERAL MOTORS CORPORATION
LANSING, MICHIGAN

DO NOT SCALE

APRIL 19 1965	M. FOCH
	BEDFORD
1966	
AC-BOSCH	

COMPRESSOR ASSEMBLY-
VACUUM (COMPLETE)

LC 393232

PRODUCTION SAMPLE TO BE TESTED AND APPROVED BY PRODUCT ENGINEERING FOR OLDSMOBILE PARTS.

1-10.19 "A"

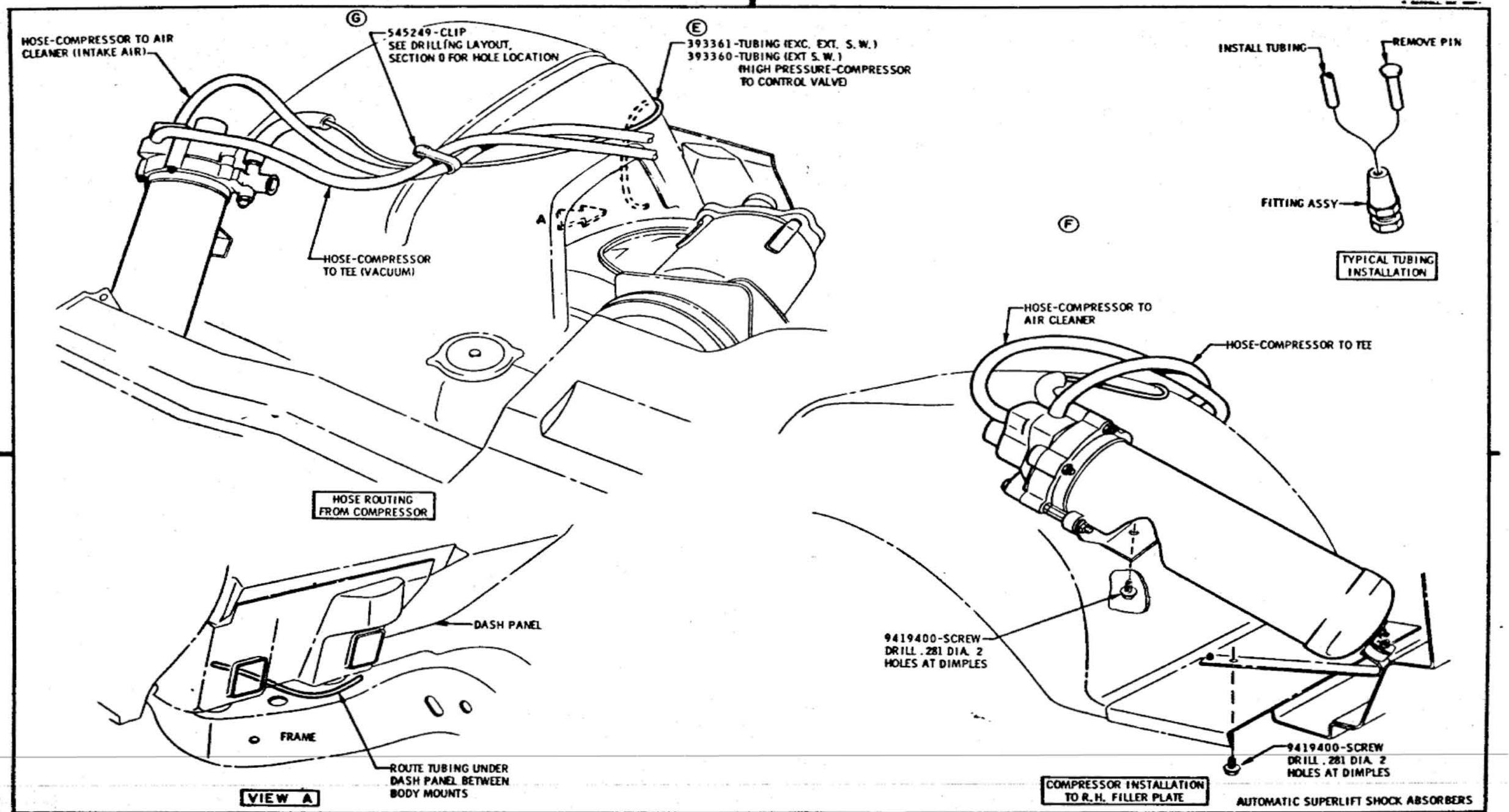

AUTOMATIC SUPERLIFT SHOCK ABSORBERS

DATE	SYM	REVISION	DR.	CK.	DATE	SYM	REVISION	DR.	CK.	DATE	SYM	REVISION	DR.	CK.
										8-31-65	E	393361 WAS 392362		
										8-31-65	D	393360 WAS 393359		
										7-21-65	C	REDRAWN		
					3-7-66	G	CLIP ADDED			6-18-65	B	REVISED & REDRAWN		
					8-31-65	F	FIGURE 1 REMOVED			5-29-65	A	NOTE ADDED		

INSTALLATION **HOSE, PIPE AND CABLE ROUTING**

DATE MAY 9, 1965
DR. BY W. C. MASON
CHECKED
APPR.
APPR.

FIRST USED 1966

Oldsmobile Service ILLUSTRATION

SERIES A

REF.

PAGE 1-10.20

PART NO. 589998

NOTE: ALL PARTS & ASSEMBLY OPERATIONS FOR L6 SAME AS FOR V8.

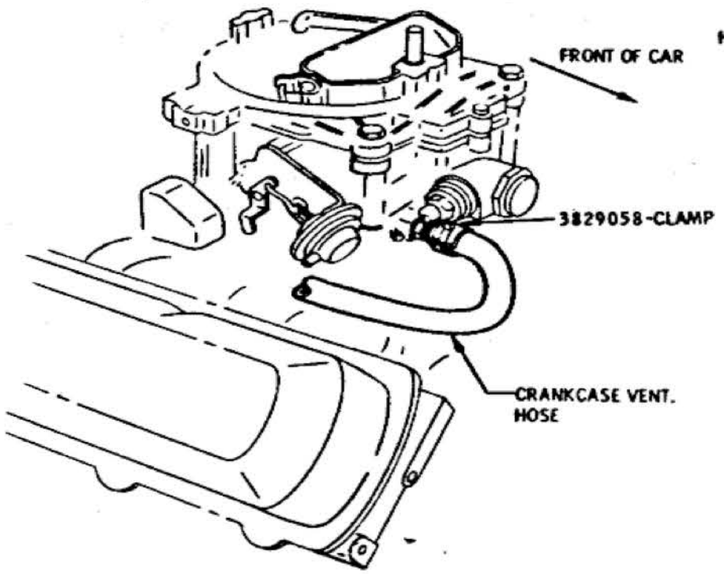

4 BBL. VACUUM SOURCE

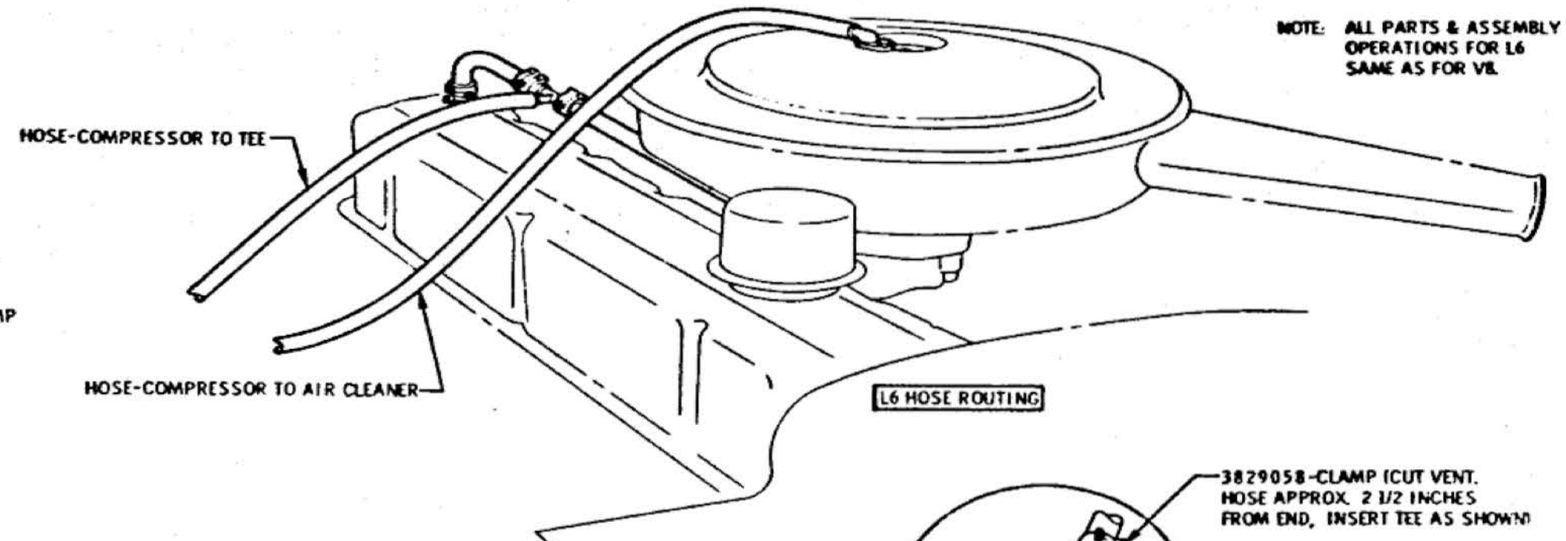

L6 HOSE ROUTING

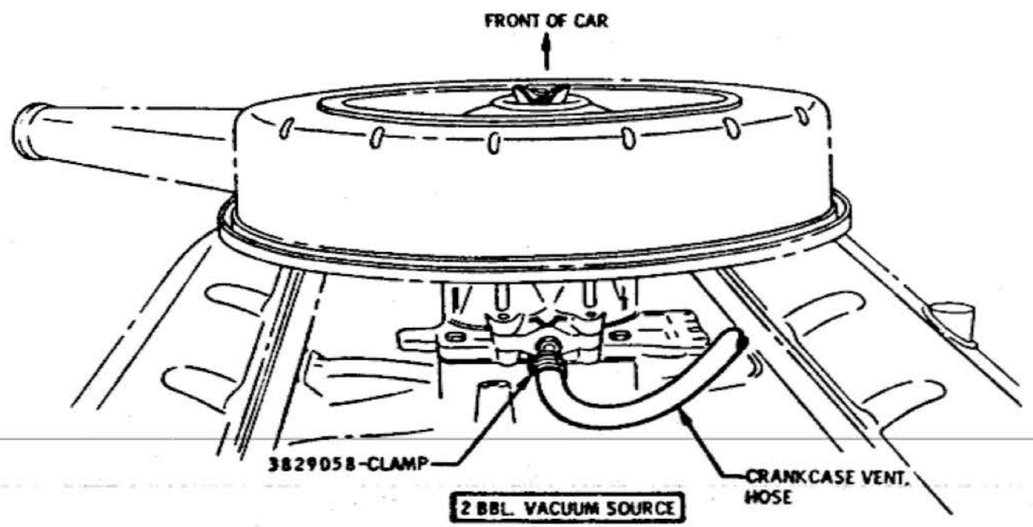

2 BBL. VACUUM SOURCE

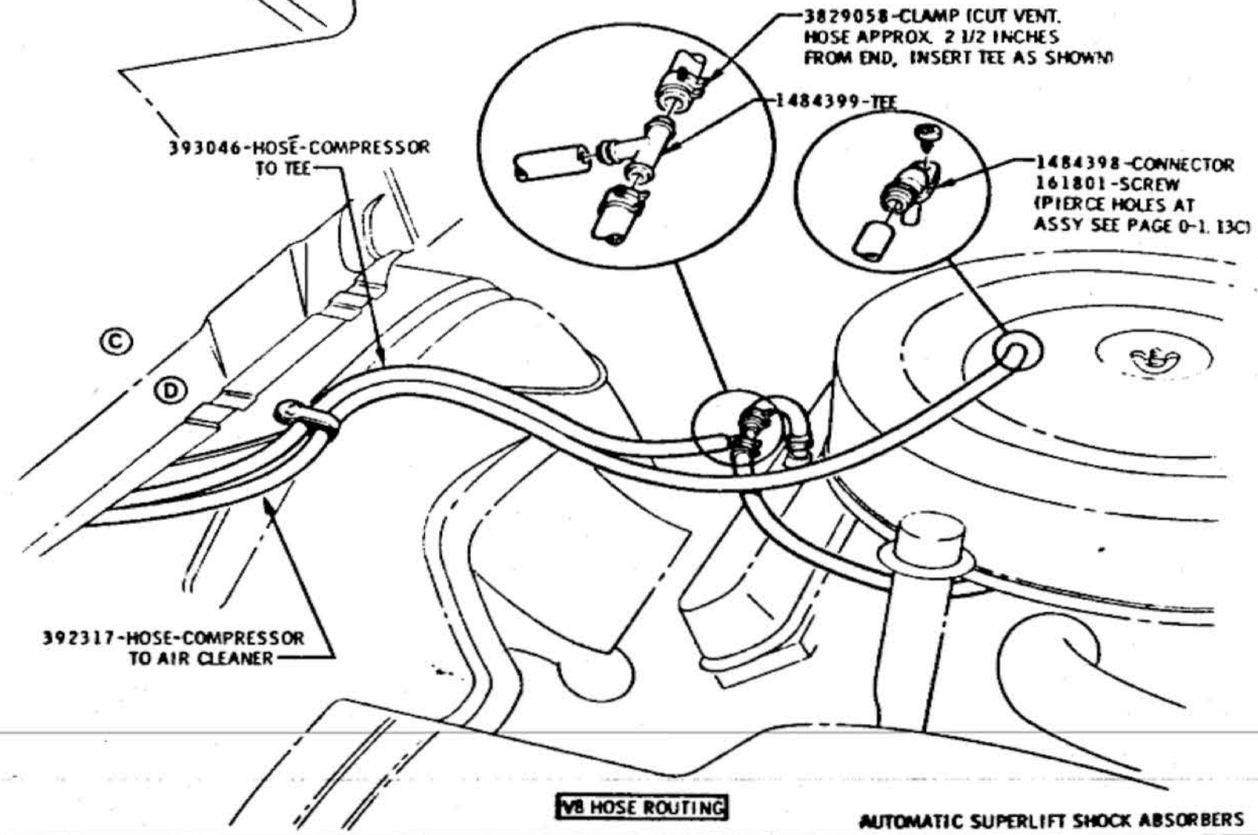

V8 HOSE ROUTING

AUTOMATIC SUPERLIFT SHOCK ABSORBERS

DATE	SYM	REVISION	DR.	CK.	DATE	SYM	REVISION	DR.	CK.	DATE	SYM	REVISION	DR.	CK.
										3-7-66	D	FASTENING REVISED		
										8-12-65	C	2328616 CALL OUT REM.		
										7-21-65	B	REDRAWN		
										6-18-65	A3	WAS 3786324		

INSTALLATION — HOSE, PIPE AND CABLE ROUTING

DATE MAY 3, 1965
DR. BY W.E. MASON
CHECKED
APPR.
APPR.

FIRST USED 1966

Oldsmobile Service Illustration

SERIES A

REF.

PAGE 1-10.21

PART NO. 589998

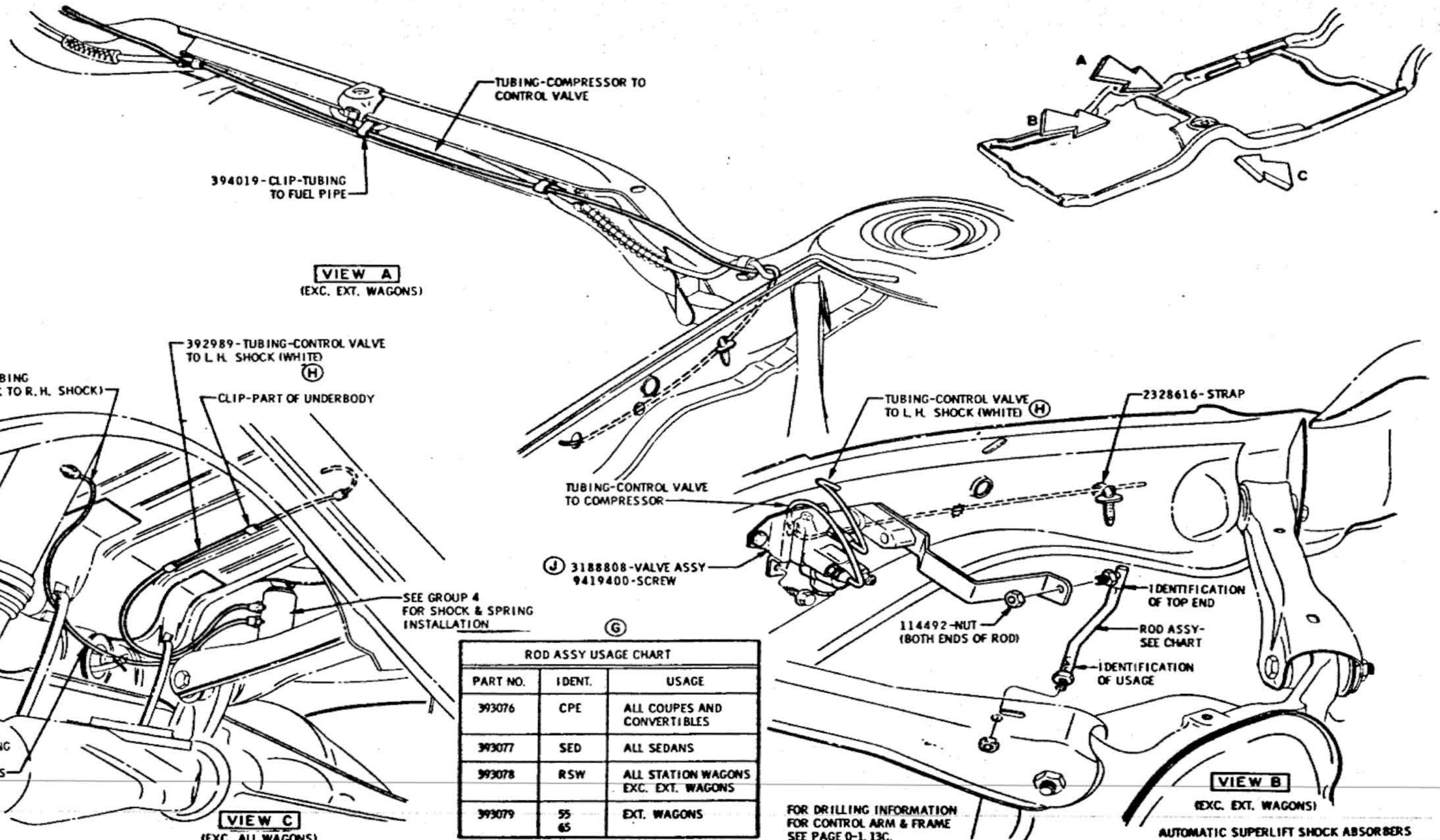

(G)

ROD ASSY USAGE CHART		
PART NO.	IDENT.	USAGE
393076	CPE	ALL COUPES AND CONVERTIBLES
393077	SED	ALL SEDANS
393078	RSW	ALL STATION WAGONS EXC. EXT. WAGONS
393079	55 65	EXT. WAGONS

DATE	SYM	REVISION	DR.	CK.	DATE	SYM	REVISION	DR.	CK.	DATE	SYM	REVISION	DR.	CK.
										7-8-65	E	NOTE REMOVED	GC	MB
					9-20-65	J	REVISED TO DETAIL			7-8-65	D	NOTE REVISED	GC	MB
					9-1-65	H2	COLOR ADDED			6-18-65	C	WAS 142247		
					8-23-65	G	CHART REVISED			6-18-65	B	NOTE ADDED		
					8-23-65	F	WAS 2328616-STRAP			6-18-65	A	NOTE REVISED		

INSTALLATION — DATE MAY 5, 1965 — DR. BY W.E. MASON — CHECKED — APPR. — APPR.

HOSE, PIPE AND CABLE ROUTING

FIRST USED 1966 — Oldsmobile Division ILLUSTRATION — PAGE 1-10.22 — SERIES A — REF. — PART NO. 589998

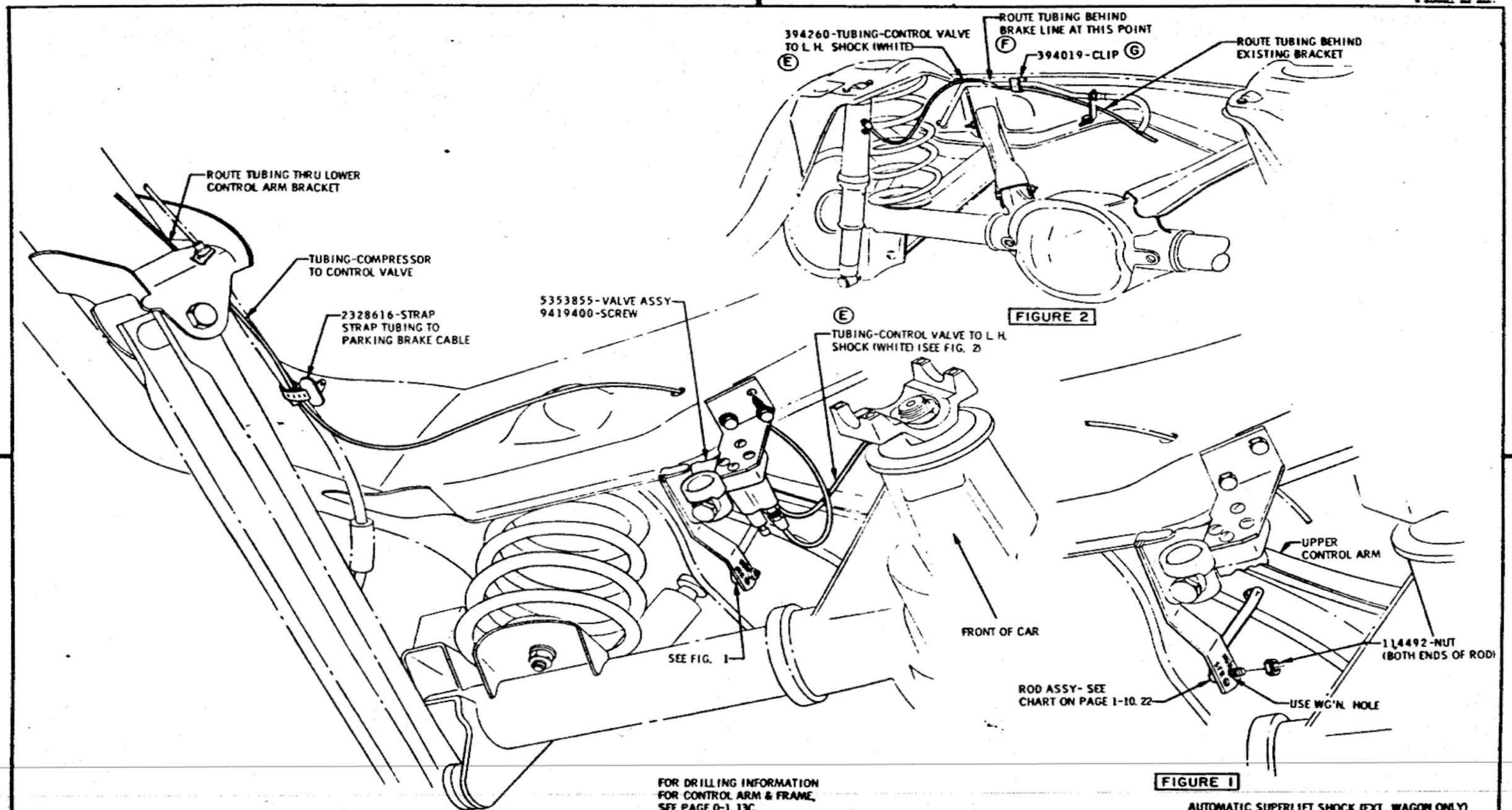

AUTOMATIC SUPERLIFT SHOCK (EXT. WAGON ONLY)

DATE	SYM	REVISION	DR.	CK.	DATE	SYM	REVISION	DR.	CK.	DATE	SYM	REVISION	DR.	CK.
										9-1-65	E	COLOR ADDED		
										8-31-65	D	394260 WAS 392877		
										8-23-65	C	FIGURE 1 REVISED		
					9-7-66	G	CLIP ADDED			8-23-65	B	WAS 3175832		
					2-11-66	F	CLIP REMOVED			8-16-65	A	WAS 3188808		

INSTALLATION — HOSE, PIPE AND CABLE ROUTING

DATE MAY 13, 1965
DR. BY W.C. MASON
CHECKED
APPR.
APPR.

FIRST USED 1966

SERIES A

REF.

PAGE 1-10.23

PART NO. 589998

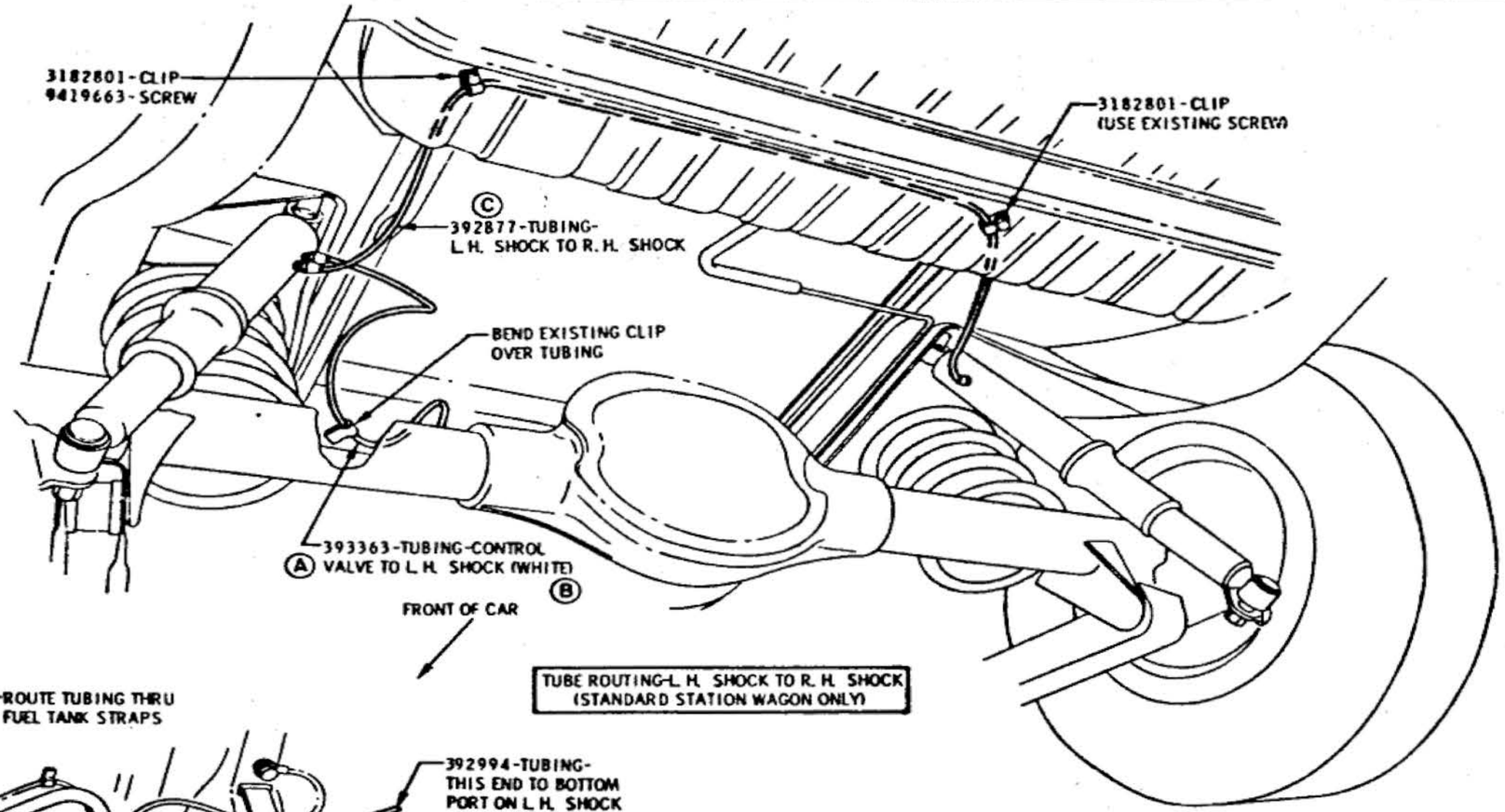

TUBE ROUTING-L.H. SHOCK TO R.H. SHOCK
(STANDARD STATION WAGON ONLY)

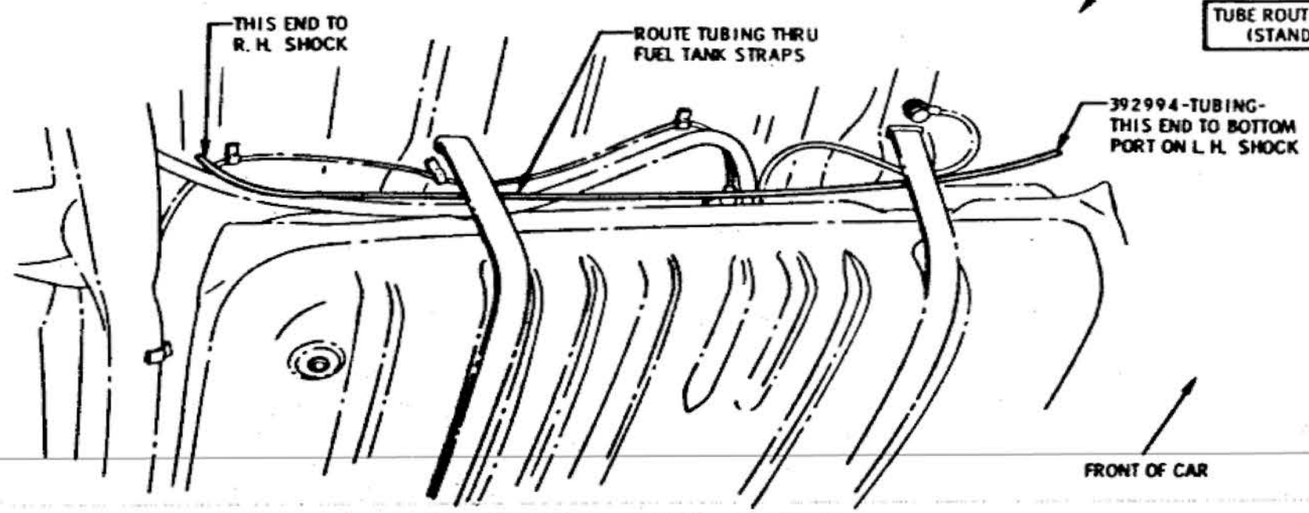

TUBE ROUTING-L.H. SHOCK TO R.H. SHOCK
(EXTENDED STATION WAGONS ONLY)

(AUTOMATIC SUPERLIFT SHOCK ABSORBER)

DATE	SYM	REVISION	DR.	CK.	DATE	SYM	REVISION	DR.	CK.	DATE	SYM	REVISION	DR.	CK.
										1-14-66	C	WAS 392887		
										9-1-65	B	COLOR ADDED		
										6-18-65	A	WAS 392989		

INSTALLATION **HOSE, PIPE AND CABLE ROUTING**

DATE MAY 13, 1965
DR. BY W.C. MASON
CHECKED
APPR.
APPR.

FIRST USED 1966

SERIES A

REF.

PAGE 1-10.24

PART NO. 589998

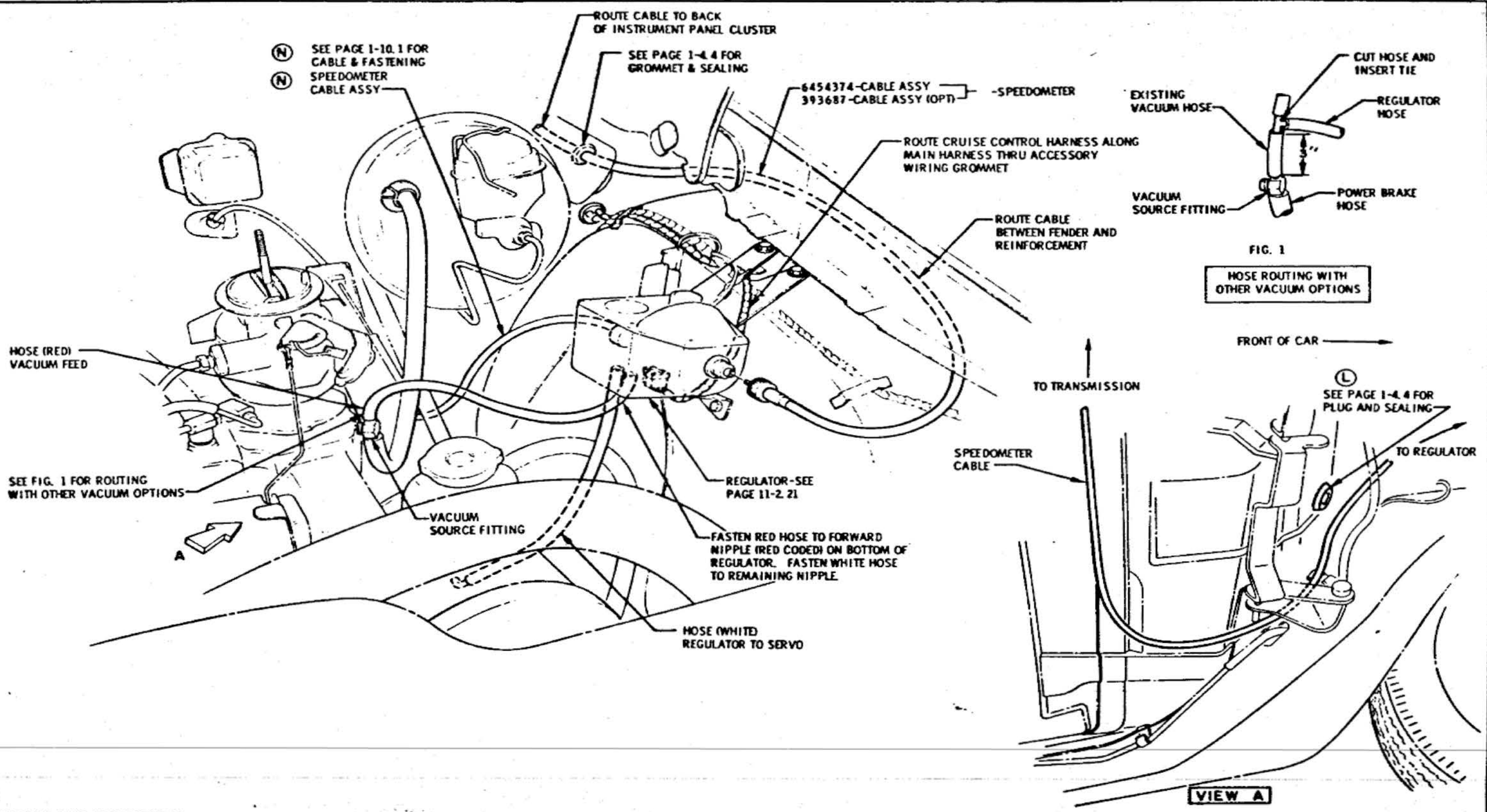

(M) SEE PAGE 1-9.8 FOR HOSE NUMBERS

1.6 CRUISE CONTROL CABLE AND VACUUM HOSE

DATE	SYM	REVISION	DR.	CK.	DATE	SYM	REVISION	DR.	CK.	DATE	SYM	REVISION	DR.	CK.
					10-27-65	K	NOSE NO'S. REMOVED	CG	DT	7-28-65	E	REDRAWN	GG	DT
					10-27-65	J	NOTE REVISED.	CG	DT	6-28-65	D	VIEW ADDED	JJ	DT
1-12-66	N	NOTES REVISED	CG	DT	9-24-65	H	NOTE ADDED	CG	DT	6-28-65	C	PART NO. ADDED	JJ	DT
11-17-65	M	NOTE ADDED	CG	DT	9-24-65	G	PART NUMBERS REVISED	CG	DT	6-28-65	B	WAS 6409968 CABLE ASSY	JJ	DT
11-1-65	L	NOTE REVISED	CG	DT	8-9-65	F	WAS 4859119 PLUG	CG	VP	6-28-65	A	VIEW ADDED	GG	VP

INSTALLATION

DATE MAY 27, 1965

DR. BY JOSEPH H. GALL

CHECKED H. VAN PELT

APPR. [illegible]

APPR.

HOSE, PIPE AND CABLE ROUTING

FIRST USED 1966

Oldsmobile Graphic Illustration

SERIES A

REF. 35K30

PAGE 1-10.25

PART NO. 589998

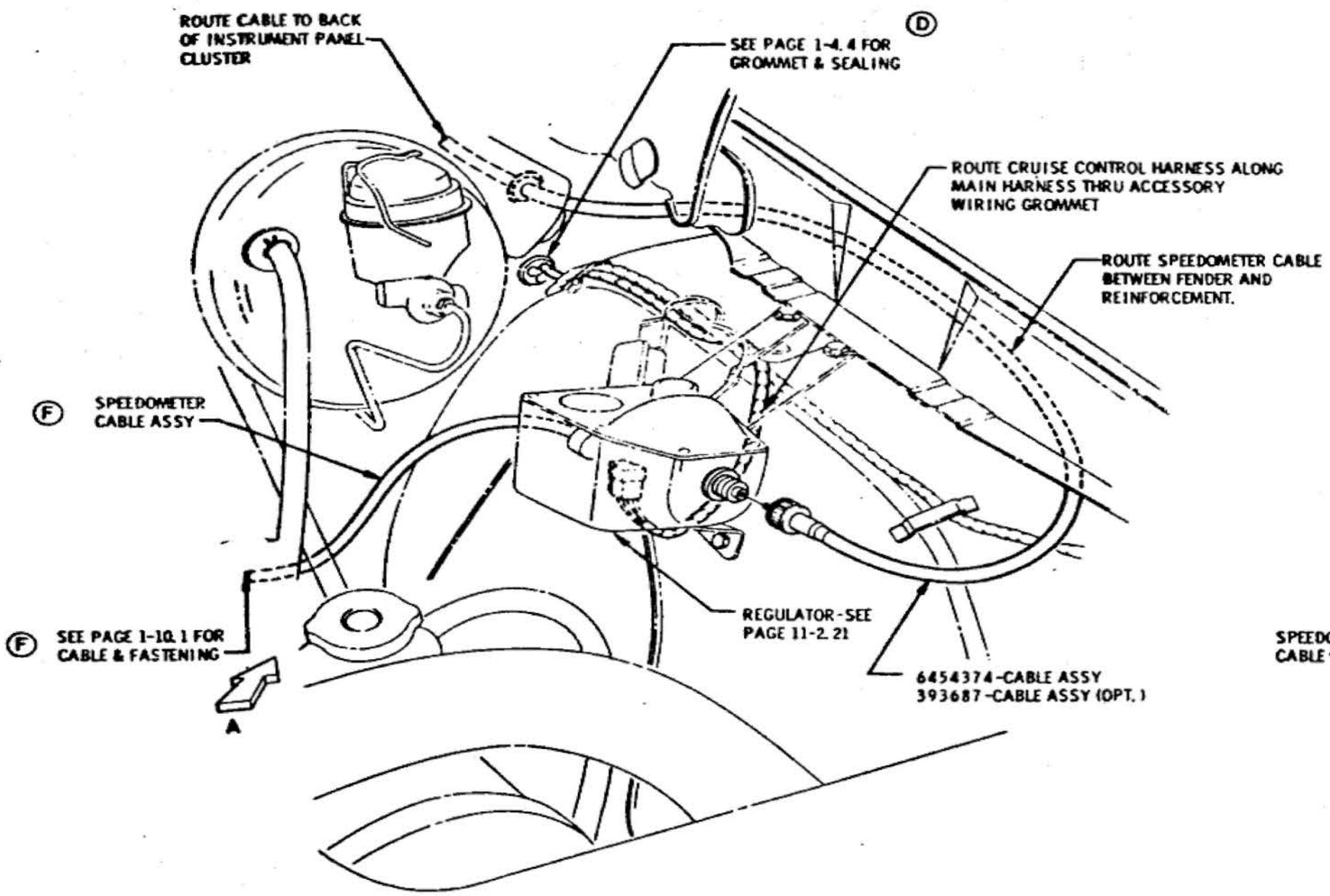

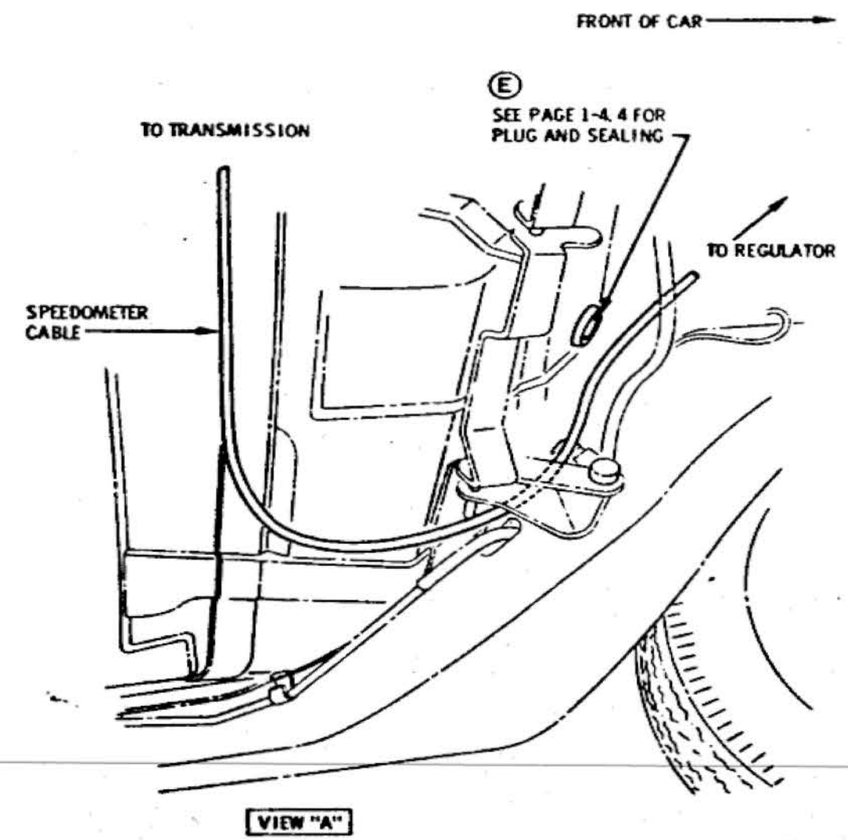

V8 CRUISE CONTROL CABLE ROUTING

DATE	SYM	REVISION	DR.	CK.	DATE	SYM	REVISION	DR.	CK.	DATE	SYM	REVISION	DR.	CK.
										4-1-65	E	NOTE REVISED		DT
										10-8-65	D	NOTE REVISED		DT
										7-30-65	C	WAS 4859119 PLUG		JP
										[illegible]	B	WAS 6409368 CABLE ASSY		DT
					1-12-66	F	NOTES REVISED		DT	6-4-65	A	VIEW ADDED		JKG

INSTALLATION **HOSE, PIPE AND CABLE ROUTING**

DATE MAY 27, 1965
DR. BY J. GALL
CHECKED H. VAN PELT
APPR.

FIRST USED 1966 — Oldsmobile Service ILLUSTRATION

SERIES A — REF. 35K30

PAGE 1-10.26

PART NO. 589998

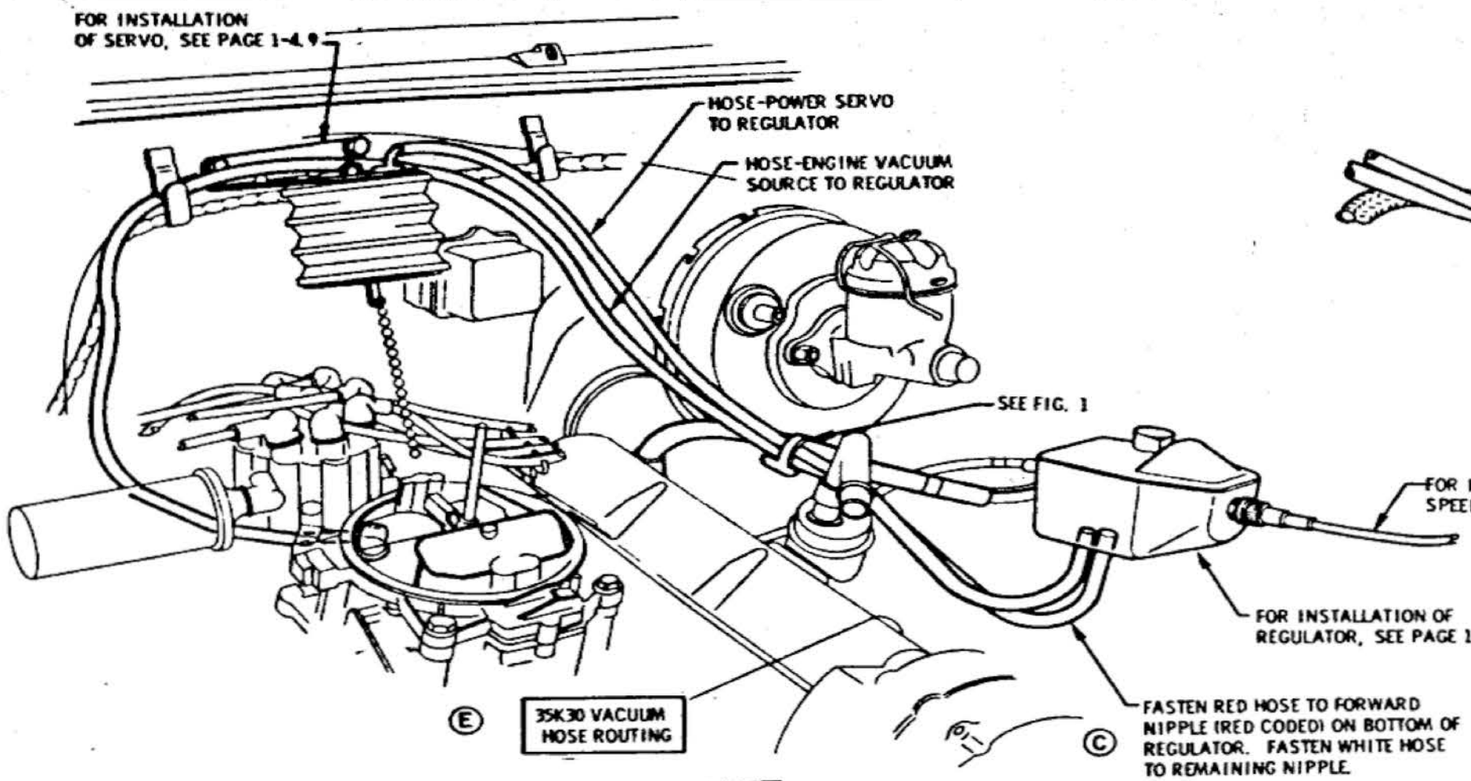

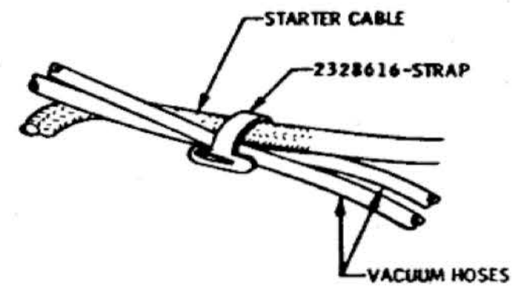

FIGURE 1

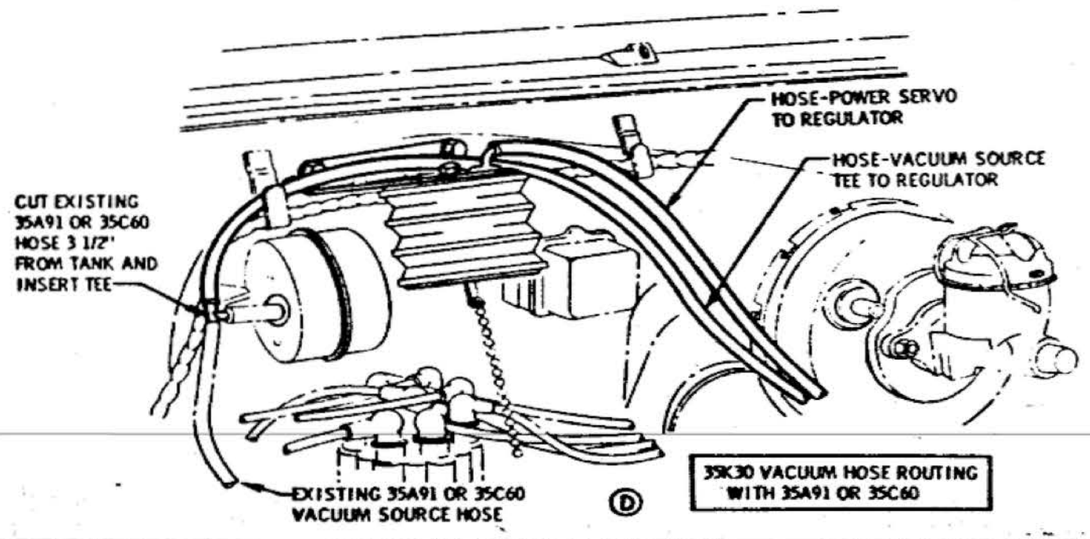

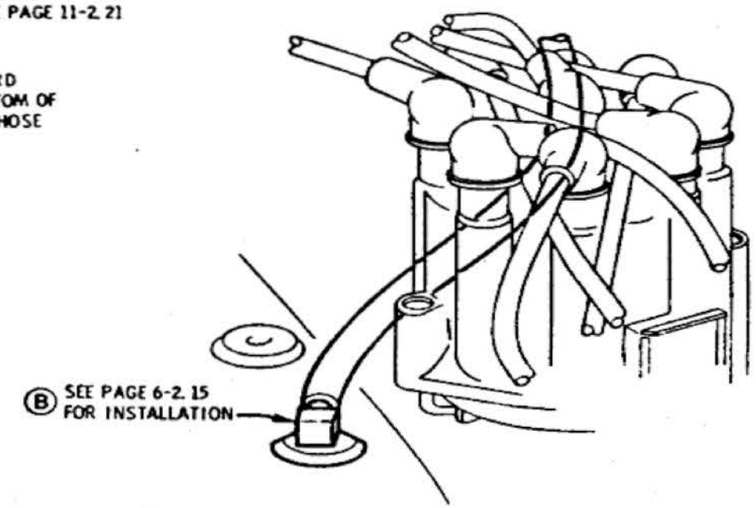

VIEW A

SEE PAGE 1-9.7 FOR HOSE NUMBERS

V8 CRUISE CONTROL VACUUM HOSE

DATE	SYM	REVISION	DR.	CK.	DATE	SYM	REVISION	DR.	CK.	DATE	SYM	REVISION	DR.	CK.
										9-30-65	E	VIEW REVISED		DT
										9-30-65	D	VIEW ADDED		DT
										9-30-65	C	NOTE ADDED		DT
										8-11-65	B	NOTE REVISED		
										6-17-65	A	PART NOS ADDED		VP

INSTALLATION — HOSE, PIPE AND CABLE ROUTING

DATE MAY 28, 1966
DR. BY CURT MAY
CHECKED E. JANTZ
APPR.
APPR.

FIRST USED 1966 — Oldsmobile Classic ILLUSTRATION

SERIES A — REF.

PAGE 1-10.27

PART NO. 589998

OLDSMOBILE PRODUCT INFORMATION MANUAL

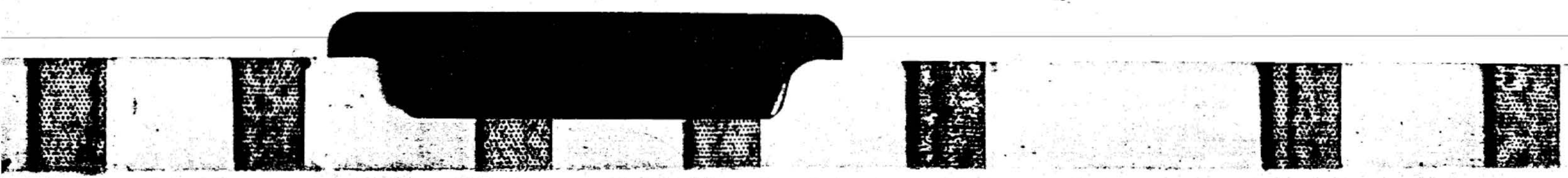

1 - FRONT OF DASH

GROUP I - FRONT OF DASH

WASHER & WIPER MOTOR, BLADES, ARMS, SEAL AND SHROUD---------- 1-4.1
3800 WIPER AND WASHER MOTOR AND FASTENINGS---------- 1-4.2
VACUUM TANKS---------- 1-4.3
HEATER HOLE COVERS & GROMMETS----------1-4.4
AIR INLET BLOWER---------- 1-4.5
A/C EVAPORATOR, BLOWER AND P.O.A. VALVE---------- 1-4.6
BLOWER TO EVAPORATOR DUCTS---------- 1-4.7
V8 THROTTLE CONTROL---------- 1-4.8
35K30 - VACUUM SERVO MOUNTING TO V8---------- 1-4.9
DASH PANEL SEALING---------- 1-4.10

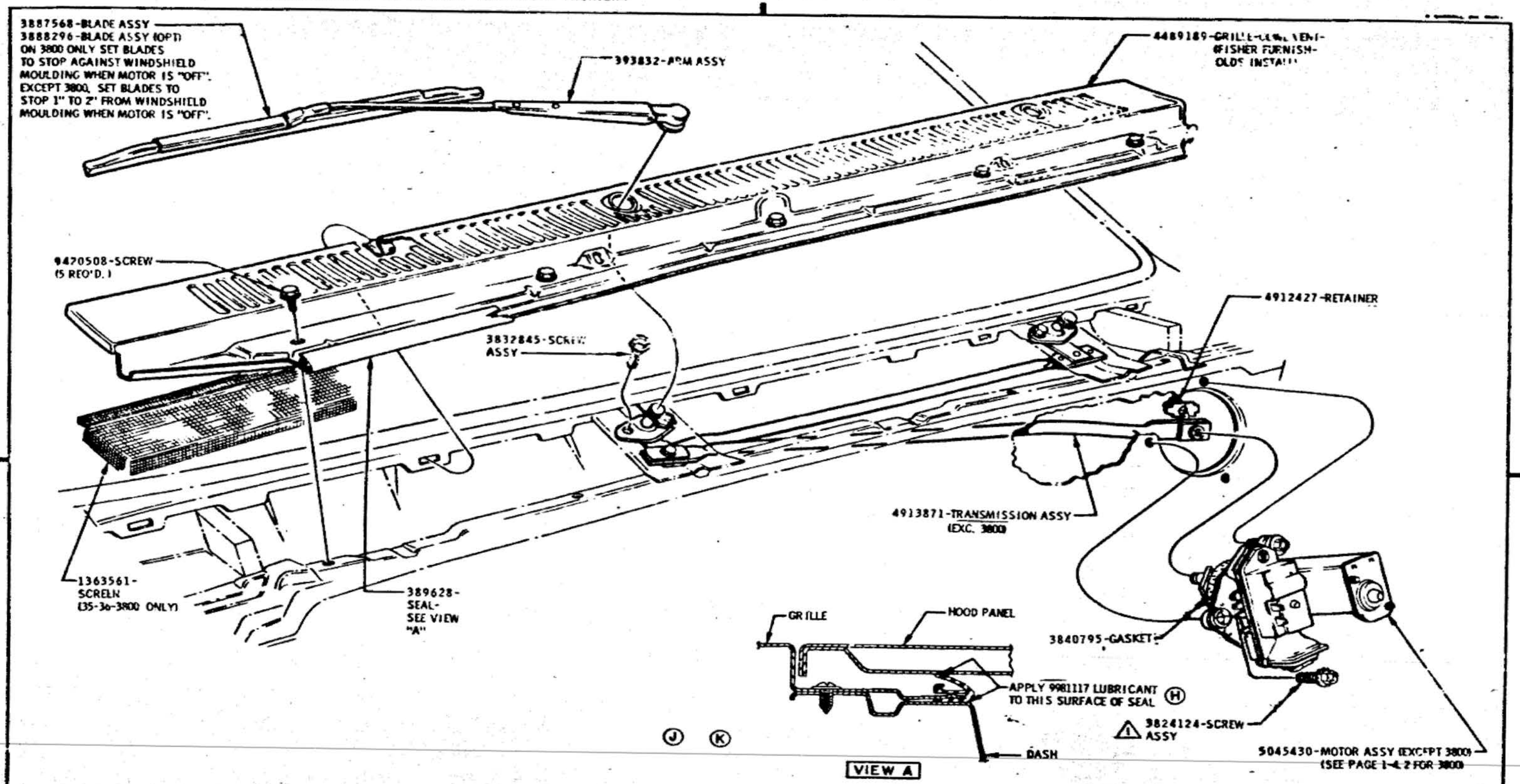

WASHER AND WIPER MOTOR, BLADES, ARMS, SEAL AND SHROUD

DATE	SYM	REVISION	DR.	CK.	DATE	SYM	REVISION	DR.	CK.	DATE	SYM	REVISION	DR.	CK.
					12-3-65	K	NOTE REMOVED			7-28-65	E	TORQUES ADDED		
					12-3-65	J	NOTE ADDED			7-28-65	D	TITLE REVISED		
					12-3-65	H	LUBRICANT NOTE ADDED			7-28-65	C	WAS 5046426-MTR. ASSY		
					10-6-65	G	QUANTITY ADDED			7-28-65	B	WAS [illegible]-[illegible]-BLADE ASSY		
					9-2-65	F	PART NO'S REVISED			7-28-65	A	WAS 3832[illegible]-ARM ASSY		

INSTALLATION FRONT OF DASH
DATE MAR. 12, 1965
DR. BY [illegible]
CHECKED H. VAN PELT
APPR. [illegible]

1966 — Oldsmobile Division — ILLUSTRATION — PAGE 1-4.1
SERIES A — ISSUE INFC 1/1/63 — PART NO. 589998

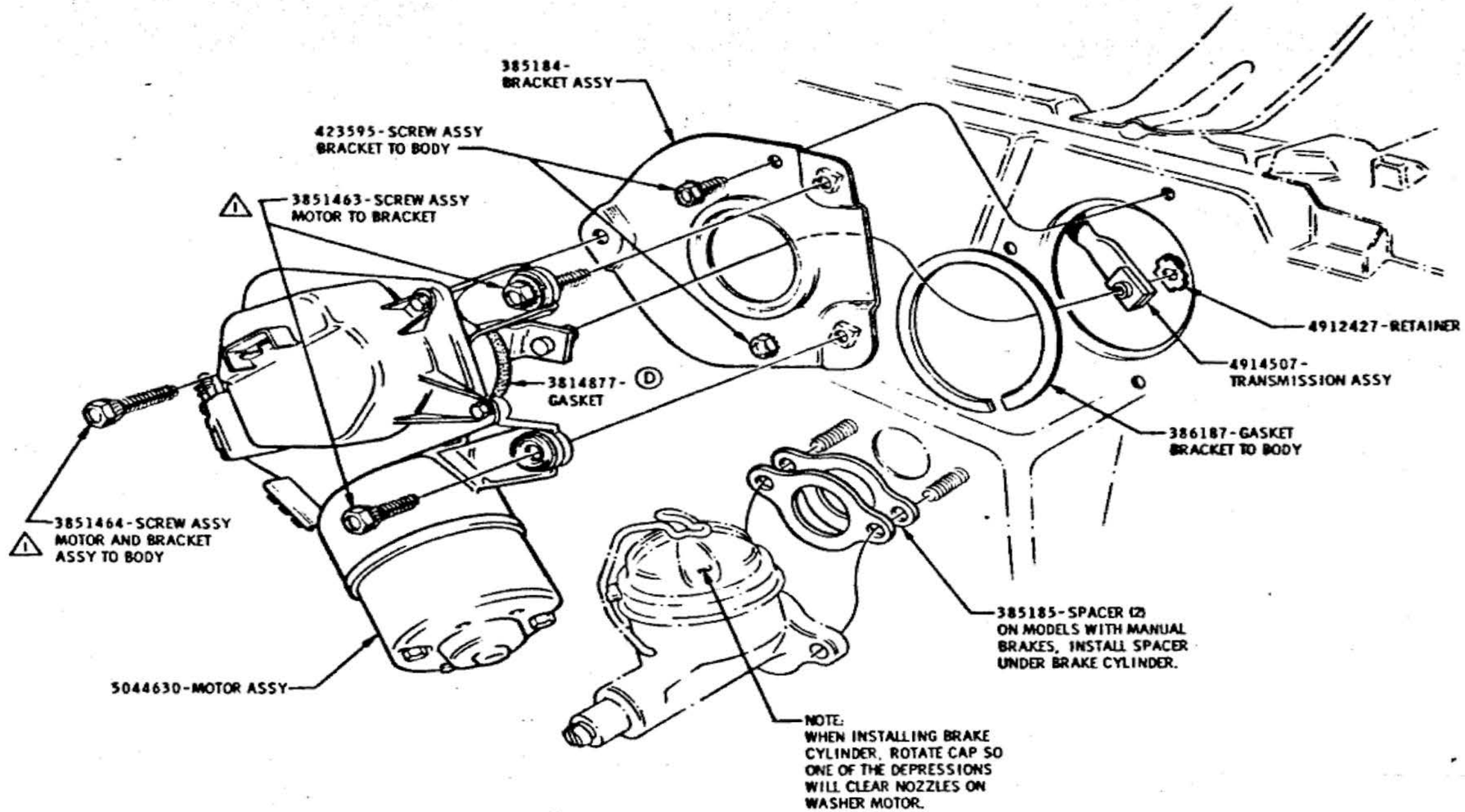

WASHER AND WIPER MOTOR AND FASTENINGS
(3800 ONLY)

Ⓑ

1 35-45 LBS. IN. Ⓒ

DATE	SYM	REVISION	DR.	CK.	DATE	SYM	REVISION	DR.	CK.	DATE	SYM	REVISION	DR.	CK.
										1-25-66	D	WAS 381913 GASKET	JG	DT
										7-23-65	C	TORQUES ADDED	BP	VP
										7-23-65	B	TITLE REVISED	BP	VP
										5-28-65	A	WAS 5844600 MOTOR ASS'X	JJ	VP

INSTALLATION FRONT OF DASH
DATE MAR. 12, 1965
DR. BY TITUS
CHECKED H. VAN PELT
APPR. [illegible]
APPR.

FIRST USED 1966
Oldsmobile Service ILLUSTRATION
SERIES A
REV. 35CM
PAGE 1-4.2
PART NO. 589998

APPLY 9981041-SEALER TO AREAS INDICATED-(4)

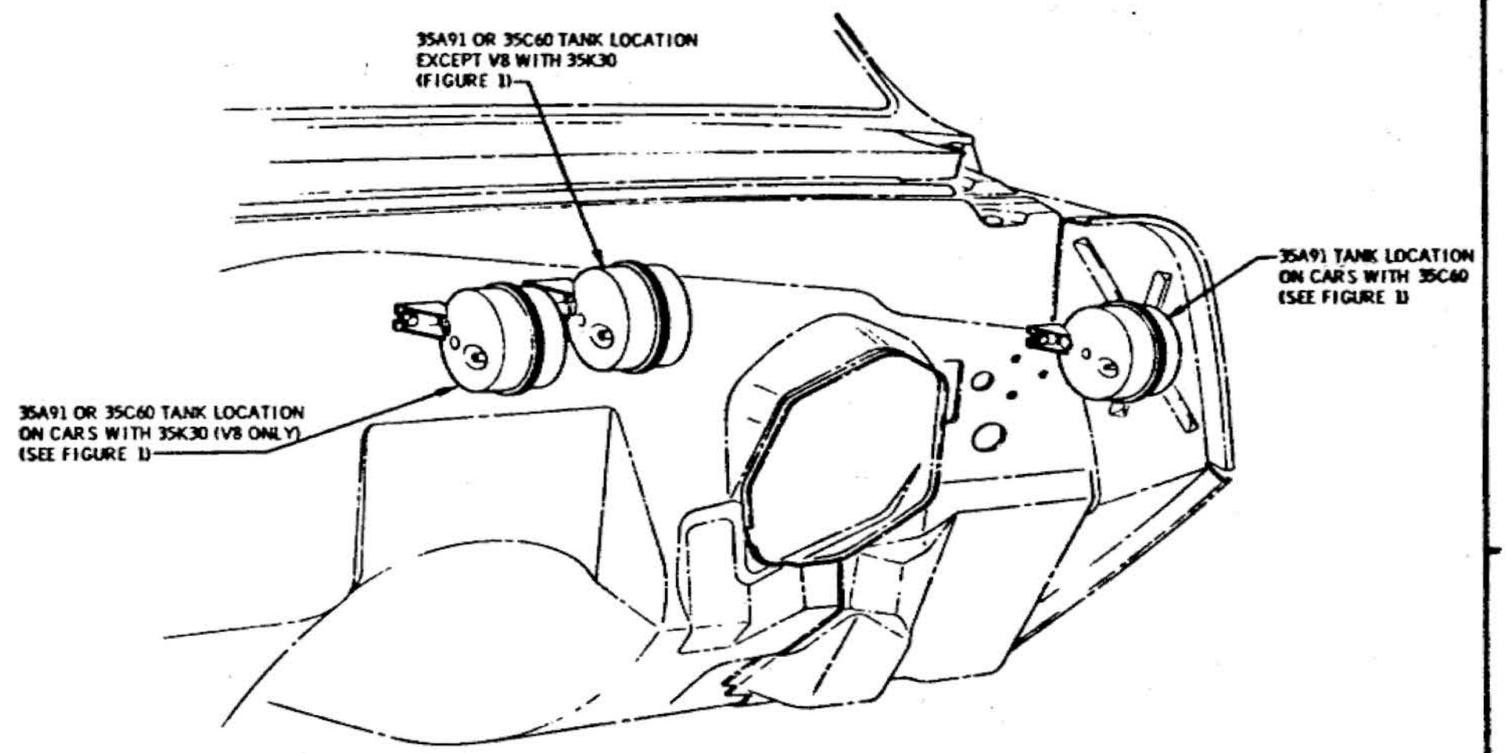

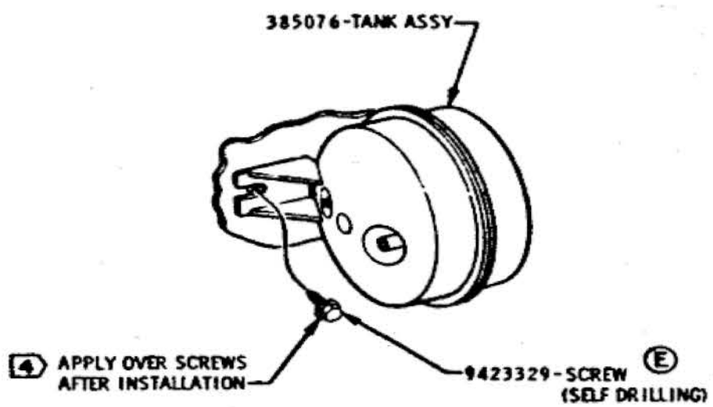

FIGURE 1
TYPICAL TANK INSTALLATION

SEE PAGES 0-L 13 AND 0-L 13A FOR HOLE DRILLING

VACUUM TANKS

DATE	SYM	REVISION	DR.	CK.	DATE	SYM	REVISION	DR.	CK.	DATE	SYM	REVISION	DR.	CK.
										4-13-66	E	WAS 9419727 - SCREW		DT
										10-8-65	D	DRAWING REVISED		DT
										7-30-65	C	NOTE REMOVED	RI	VP
										1-21-65	B	REDRAWN		
										6-21-65	A	SEALER SYMBOLS REVISED	CS	

INSTALLATION FRONT OF DASH
DATE MAR. 12, 1965
DR. BY T. TYLER
CHECKED H. VAN DELT
APPR. —
APPR.

FIRST USED 1966
Oldsmobile DIVISION ILLUSTRATION
SERIES A
REF. 35C60 35A91
PAGE 1-4.3
PART NO. 589998

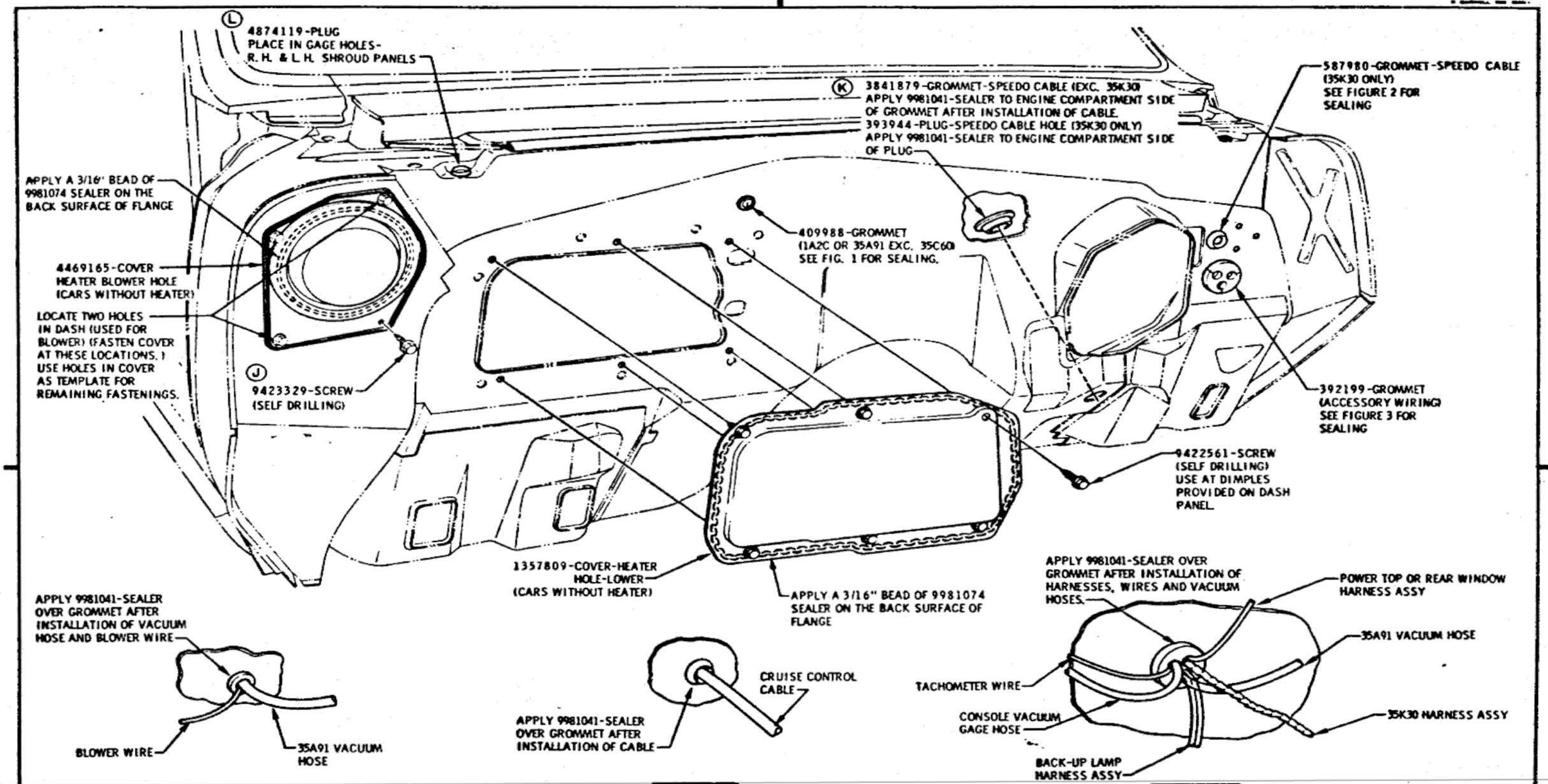

SEE PAGES 0-L 13 & 0-L 13A FOR DRILLING HEATER HOLE COVERS & GROMMETS

DATE	SYM	REVISION	DR.	CK.	DATE	SYM	REVISION	DR.	CK.	DATE	SYM	REVISION	DR.	CK.
					2-24-66	K	NOTE REVISED	JJ	DT	9-27-65	E	NOTE REVISED		DT
					1-10-66	J	WAS 9422561 SCREW		DT	5-6-65	D	DRILLING NOTE ADDED		UP
					1-10-66	H	WAS 9423310 COVER		DT	4-30-65	C2	DRILLING NOTES REMOVED		DT
					11-1-65	G	GROMMET & PLUG ADDED		DT	4-12-65	B	WAS 9419303 SCREW		DT
3-8-66	L	WAS 4805842	KL	DT	11-1-65	F2	VIEWS ADDED		DT	4-8-65	A	4805842 PLUG ADDED		UP

INSTALLATION FRONT OF DASH
DATE MAR. 12, 1965
DR. BY D. DUS
CHECKED H. VAN DELT
APPR.
APPR.

FIRST USED 1966
Oldsmobile Service ILLUSTRATION
SERIES A
REF. 85C40
PAGE 1-4.4
PART NO. 589998

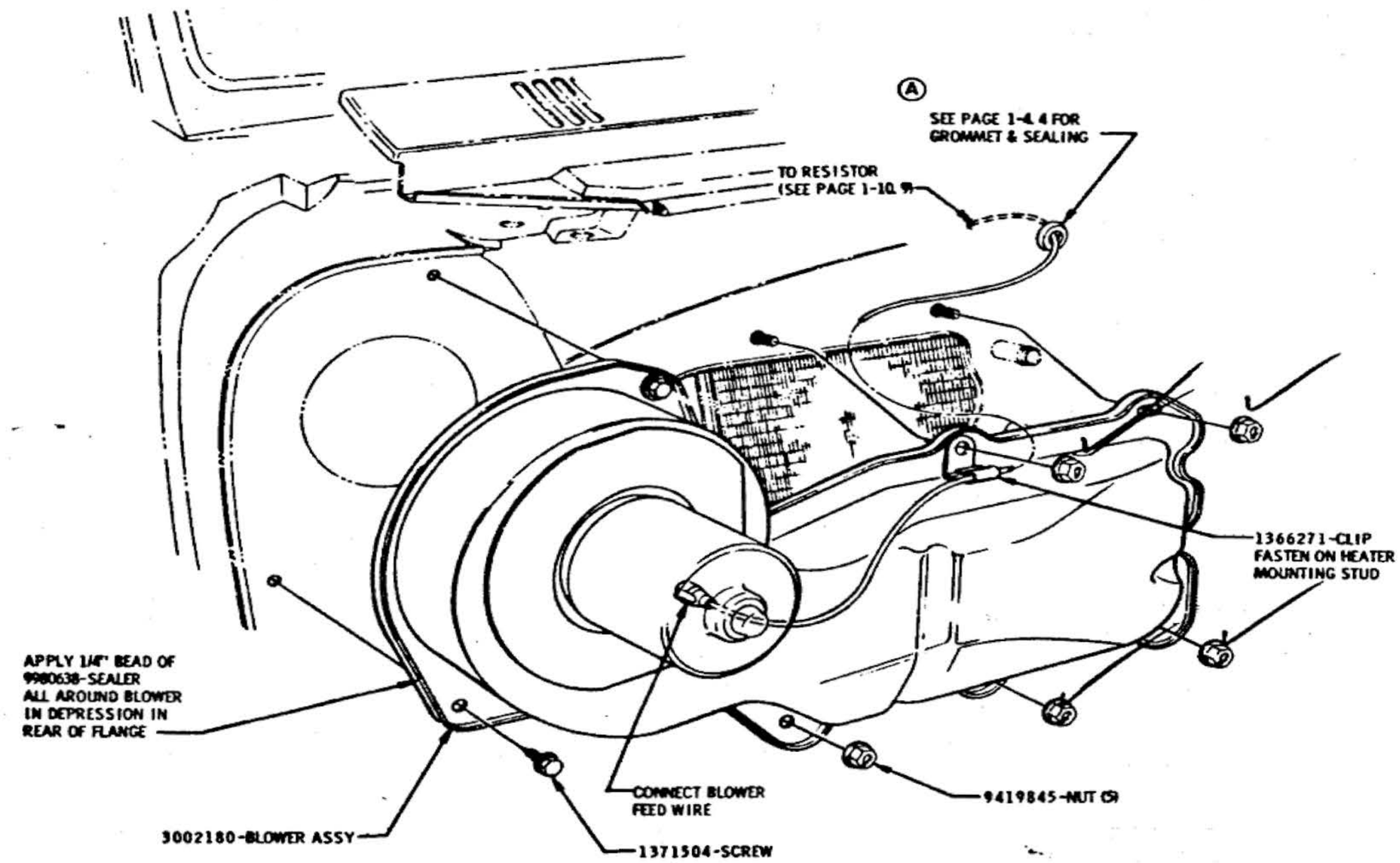

AIR INLET BLOWER

DATE	SYM	REVISION	DR.	CK.	DATE	SYM	REVISION	DR.	CK.	DATE	SYM	REVISION	DR.	CK.
										10-29-65	A	NOTE REVISED	6	DT

INSTALLATION FRONT OF DASH

DATE MAR. 12, 1965
DR. BY TITUS
CHECKED H. VAN PELT
APPR. —
APPR.

FIRST USED 1966 — Oldsmobile GRAPHIC ILLUSTRATION

SERIES A — REV. 1ABC — PAGE 1-4.5 — PART NO. 589998

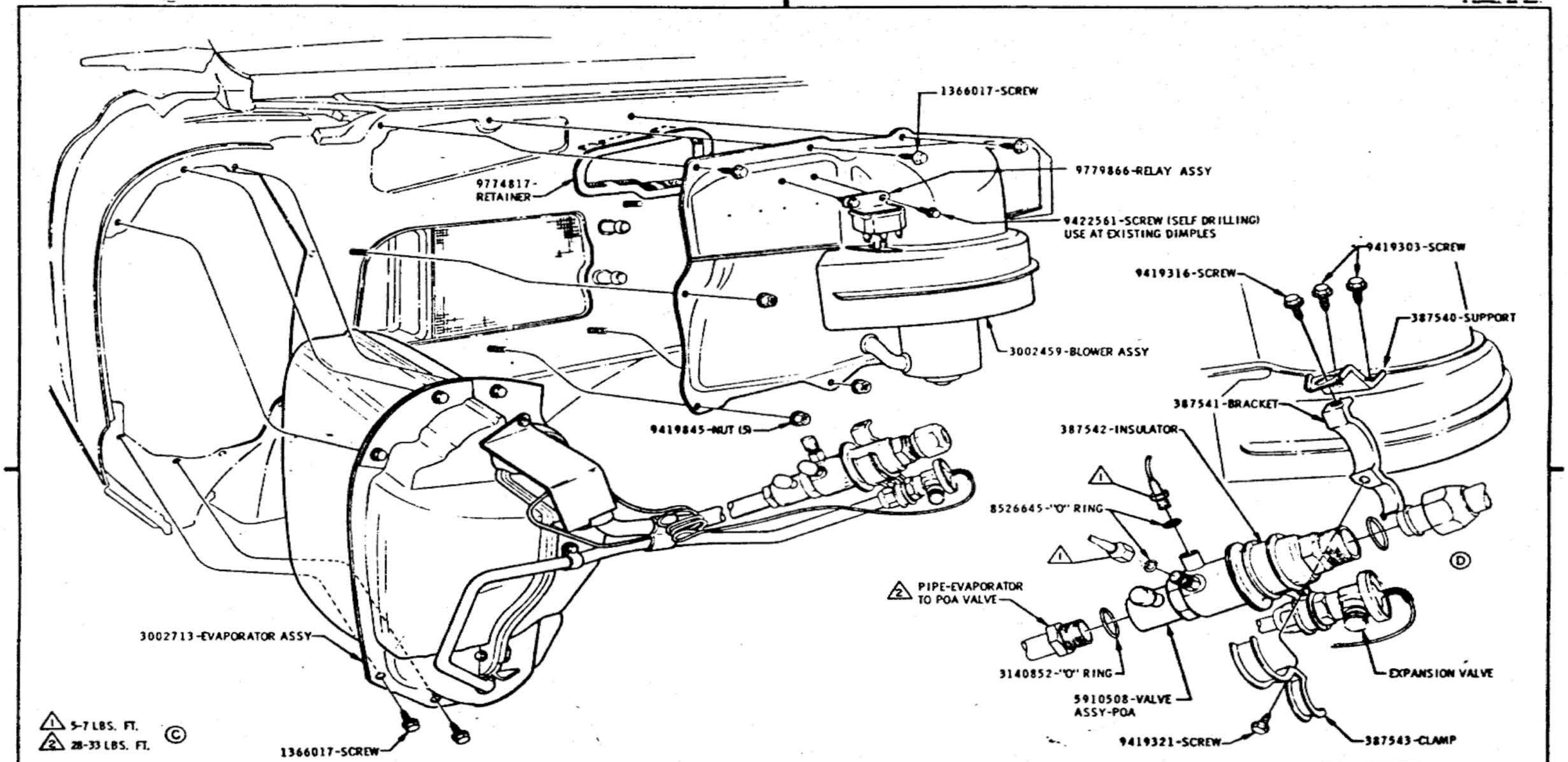

(B) FOR "O" RING LUBRICATION SEE PAGE 0-L 18

A/C EVAPORATOR, BLOWER & POA VALVE

DATE	SYM	REVISION	DR.	CK.	DATE	SYM	REVISION	DR.	CK.	DATE	SYM	REVISION	DR.	CK.
										9-13-65	B	TORQUE REMOVED		
										9-1-65	C	TORQUES ADDED		
										8-3-65	B	NOTE ADDED		
										5-28-65	A	RELAY DETAIL REV'D.		

INSTALLATION FRONT OF DASH
DATE MAR. 8, 1965
DR. BY TOPS
CHECKED H. VAN PELT
APPR. L.S. [illegible]
APPR.

FIRST USED 1966 — Oldsmobile ILLUSTRATION
SERIES A
REF. 35C60
PAGE 3-46
PART NO. 589998

3849161-DUCT ASSY-
CONSISTS OF PT. NO.
3849162-DUCT AND
3849163-DUCT

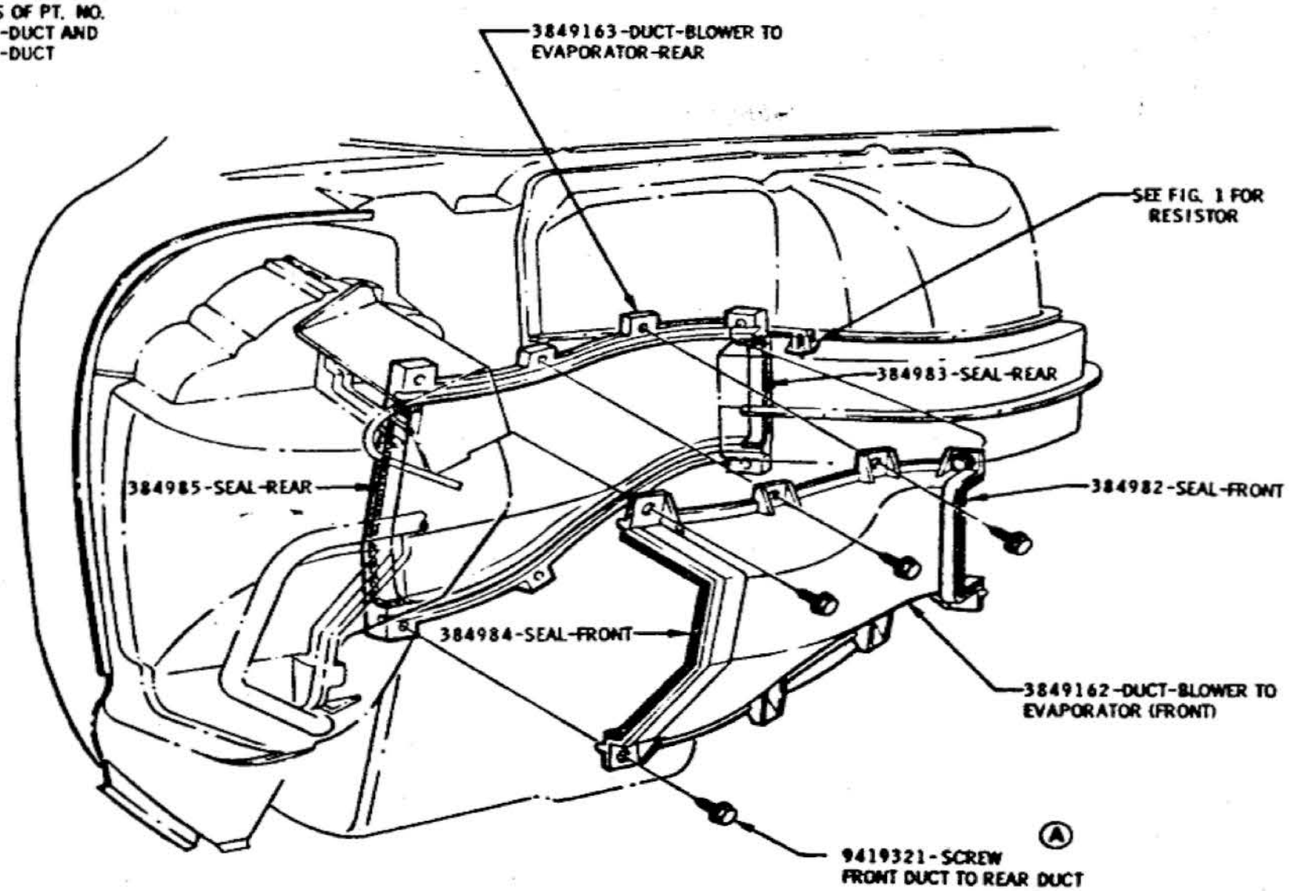

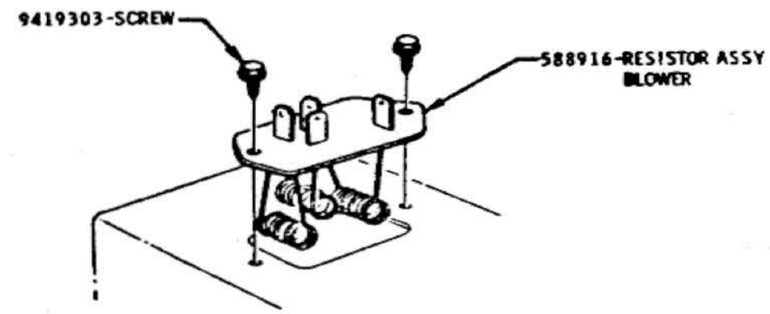

FIG. 1

INSTALLATION OF BLOWER RESISTOR ASSY

BLOWER TO EVAPORATOR DUCTS

DATE	SYM	REVISION	DR.	CK.	DATE	SYM	REVISION	DR.	CK.	DATE	SYM	REVISION	DR.	CK.
										7-965	A	NHS 903321-SCREW		

INSTALLATION FRONT OF DASH
DATE MAR. 8, 1965
DR. BY TITUS
CHECKED H. VAN PELT
APPR. K. S. Malaby
APPR.

FIRST USED 1966 | Oldsmobile Service ILLUSTRATION | PAGE 1-47
SERIES A | REF. 36C60 | PART NO. 589998

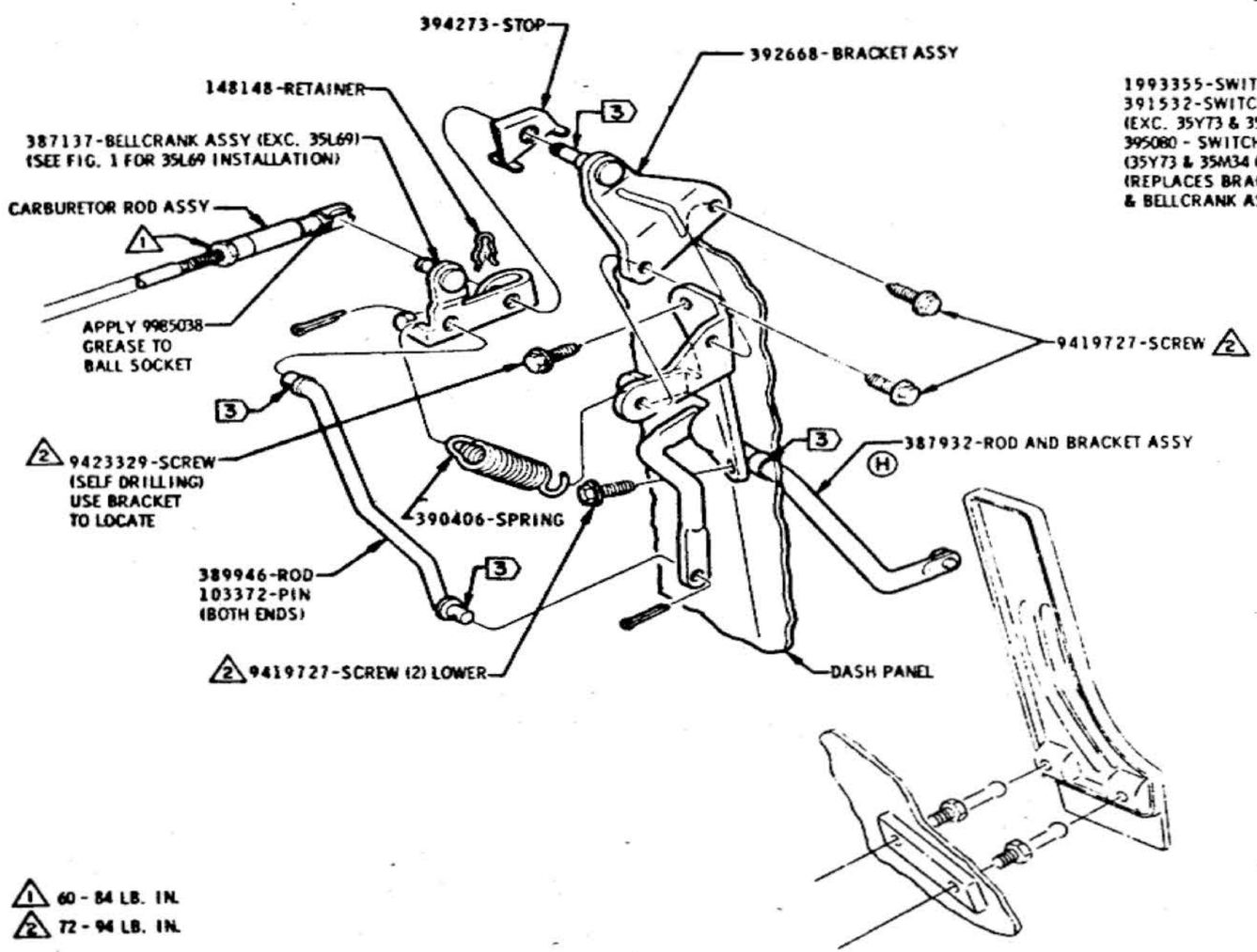

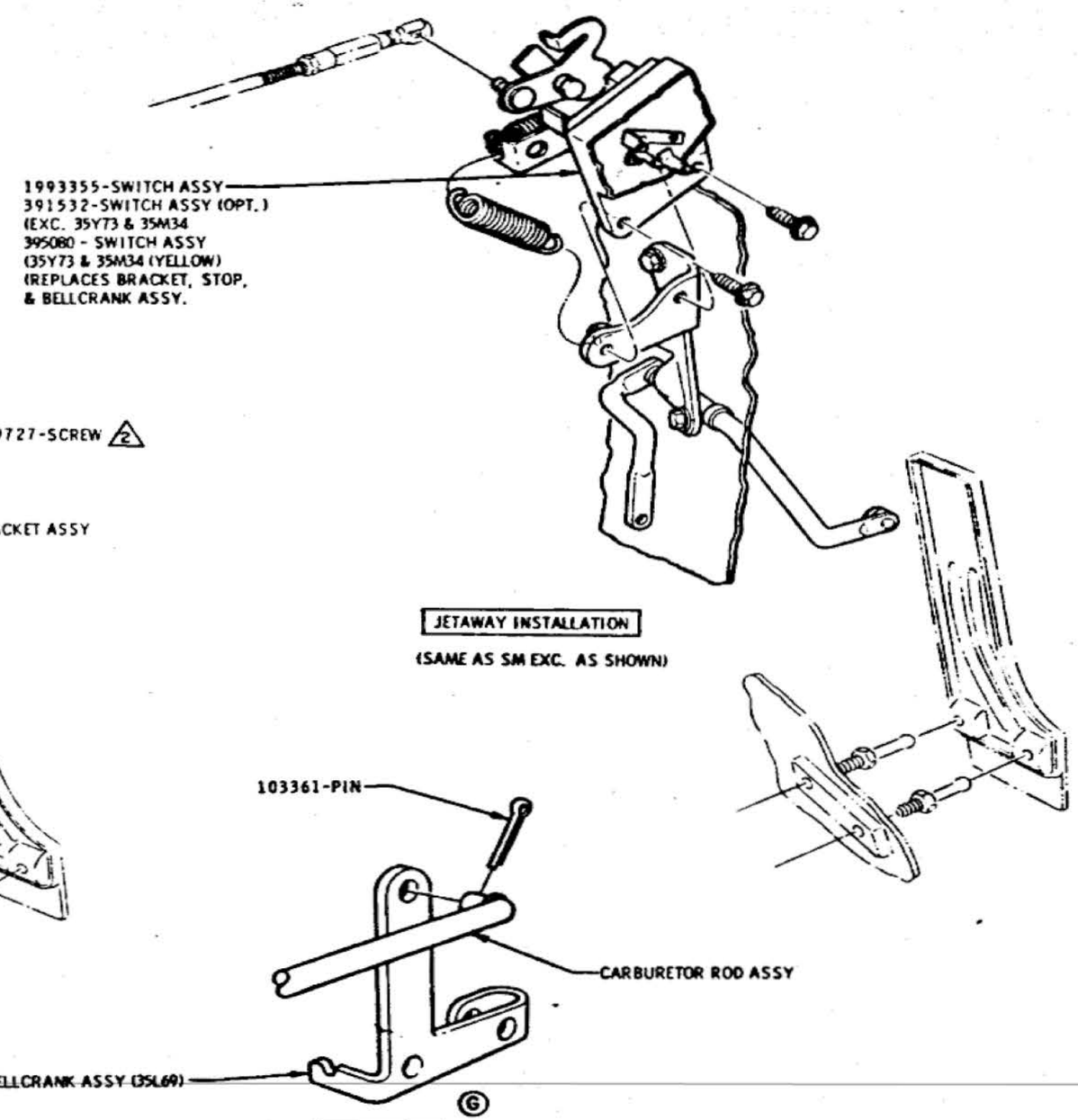

FIGURE 1

LUBRICATE AREAS INDICATED WITH 9985002 OIL

V8 THROTTLE CONTROL

DATE	SYM	REVISION	DR.	CK.	DATE	SYM	REVISION	DR.	CK.	DATE	SYM	REVISION	DR.	CK.
										11-11-66	E	35L69 OPT. ADDED		
										9-15-66	D	394273 - STOP ADDED		
					9-15-66	H	3792913 CANCELLED			7-28-65	C	1993353 WAS 1993676		
					8-31-66	G	FIG. 1 ADDED			7-20-65	B	391532 ADDED		
					11-22-65	F	35Y73 & M34 OPT. ADDED			5-24-65	A	NOTE ADDED		

INSTALLATION FRONT OF DASH
DATE APRIL 5, 1965
DR. BY MODERN ENGR.
CHECKED
APPR. R.C. STEMPEL
FIRST USED 1966
Oldsmobile ILLUSTRATION
SERIES A
REF. TR-5419
PAGE 1-4.8
PART NO. 589998

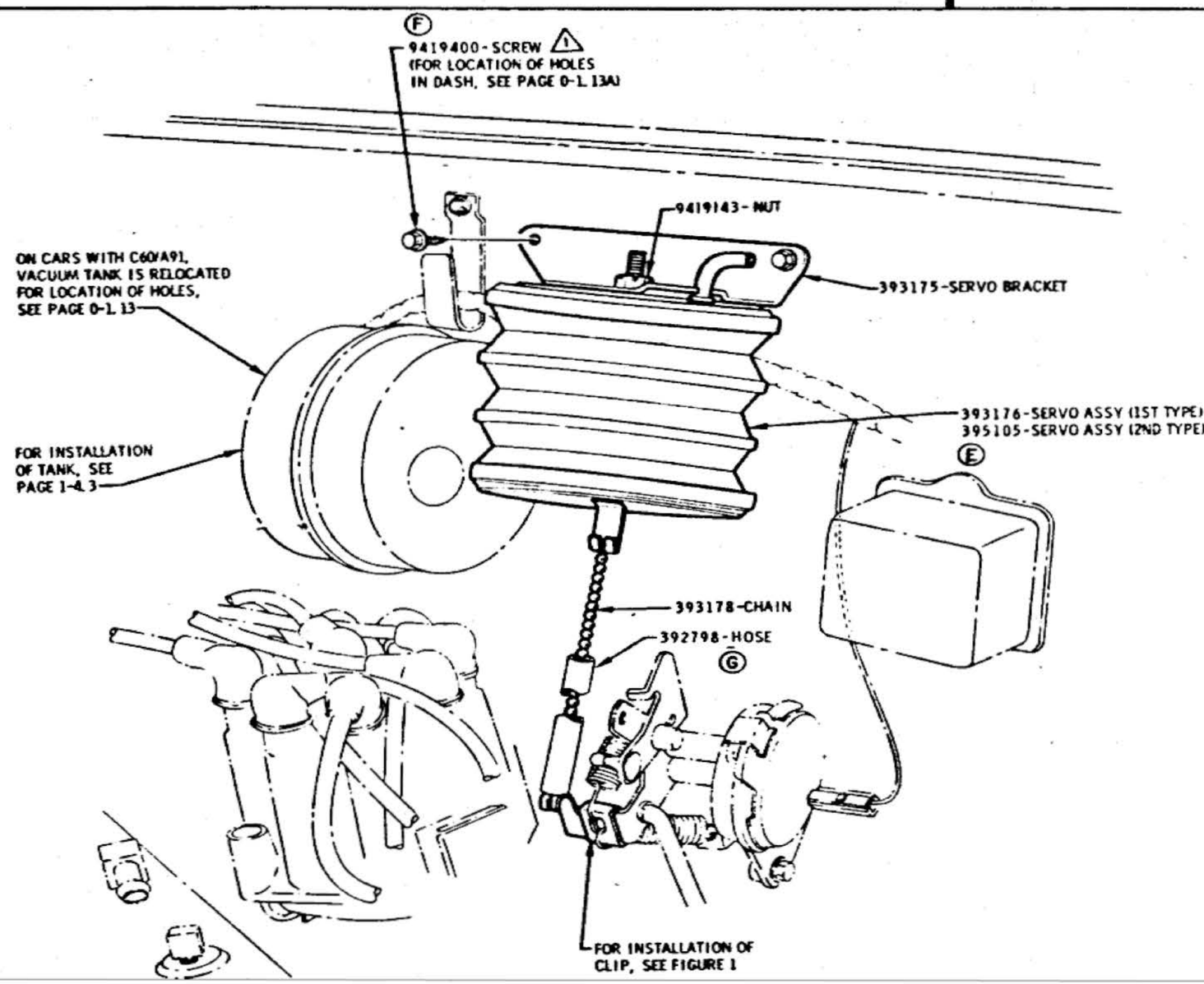

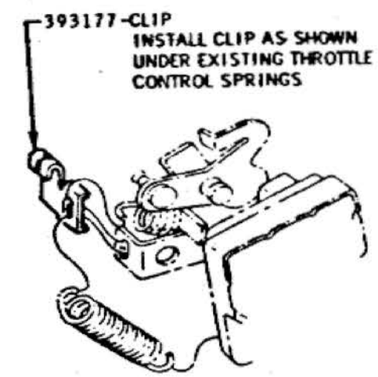

FIGURE 1

CHAIN INSTALLATION

AFTER SECURING CHAIN TO LEVER ASSY. ATTACH OPPOSITE END OF CHAIN TO BRACKET ON SERVO ASSY KEEPING CHAIN TAUT, THEN SLACKEN CHAIN ONE BEAD LENGTH.

(D) CRIMP EACH SLOT SHUT AFTER INSERTING CHAIN.

△1 96-144 LB. IN.

35K30 - VACUUM SERVO MOUNTING TO V8

DATE	SYM	REVISION	DR.	CK.	DATE	SYM	REVISION	DR.	CK.	DATE	SYM	REVISION	DR.	CK.
										11-17-65	E	SECOND TYPE ADDED		DT
										9-14-65	D	CRIMP NOTE ADDED		
										8-19-65	C	NOTE ADDED		
					1-21-66	B	NOTE ADDED		DT	7-30-65	B	TORQUE ADDED		VP
					1-13-66	F	WAS 9423323 SCREW		DT	7-30-65	A	WAS 9419400 SCREW		VP

INSTALLATION — FRONT OF DASH

DATE - MAY 28, 1965
DR. BY CURT MAY
CHECKED F. JANTZ
APPR. R.C. STEMPEL
APPR.

FIRST USED 1966 — Oldsmobile GRAPHIC ILLUSTRATION

SERIES A — REF. 35K30 — PAGE 1-4.9 — PART NO. 589998

APPLY 9981041-SEALER
TO AREAS INDICATED- 4

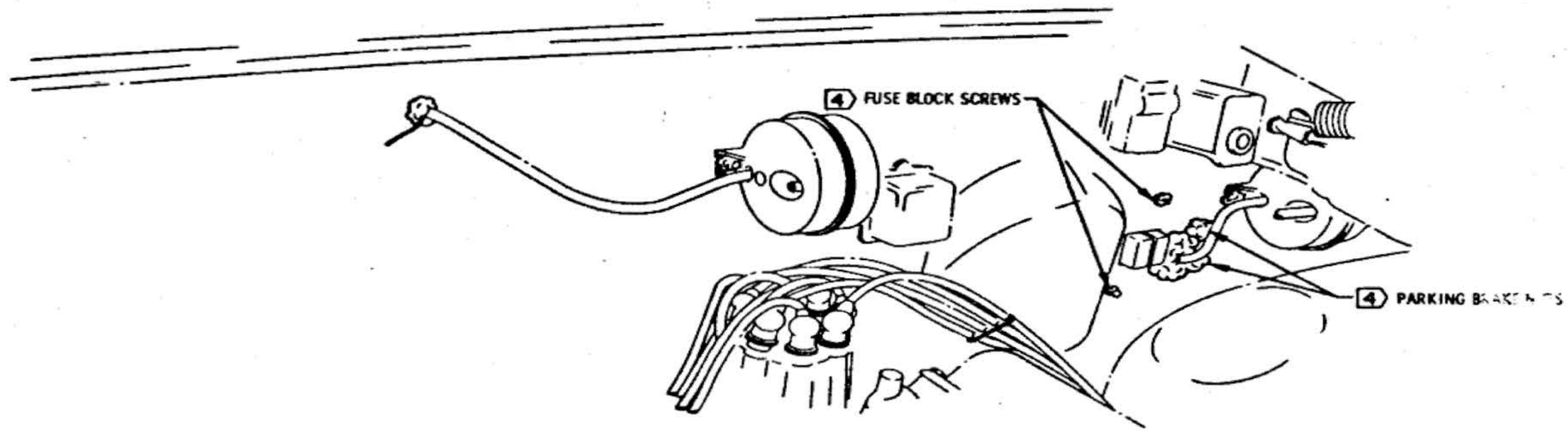

DASH PANEL SEALING

DATE	SYM	REVISION	DR.	CK.	DATE	SYM	REVISION	DR.	CK.	DATE	SYM	REVISION	DR.	CK.

INSTALLATION FRONT OF DASH

DATE Aug. 1 1966
DR. BY JOSEPH V. GALE
CHECKED Tirop
APPR.
APPR.

FIRST USED 1966
ILLUSTRATION
SERIES A
REV.
PAGE 1-4.10
PART NO. 589998

OLDSMOBILE PRODUCT INFORMATION MANUAL

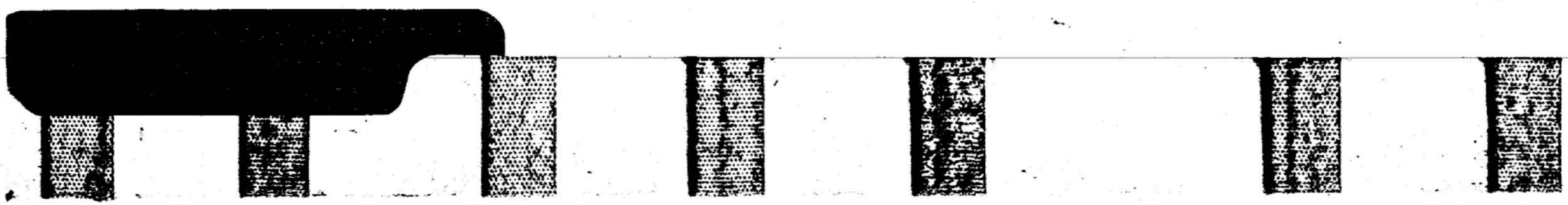

1 — I/P PARTS

GROUP I - INSTRUMENT PANEL PARTS

CLUSTER & PAD ASSY----------1-6.1
ACCESSORY CONTROLS----------1-6.2
CLOCK & COVERS----------1-6.3
RADIO RECEIVER AND FRONT SPEAKER----------1-6.4
ACCESSORY SWITCHES----------1-6.5
TACHOMETER & A/C CENTER OUTLET----------1-6.6
HEATER CONTROL----------1-6.7
HEATER-A/C CONTROL & WIRING----------1-6.8
RADIO SUPPORT, CLUSTER & PAD ASSY----------1-6.9
ASH TRAY & 35K30 SWITCH ASSY----------1-6.10
GLOVE BOX ASSEMBLY----------1-6.11
GLOVE BOX----------1-6.12
VACUUM TRUNK SWITCH, GLOVE BOX LAMP & SWITCH----------1-6.13

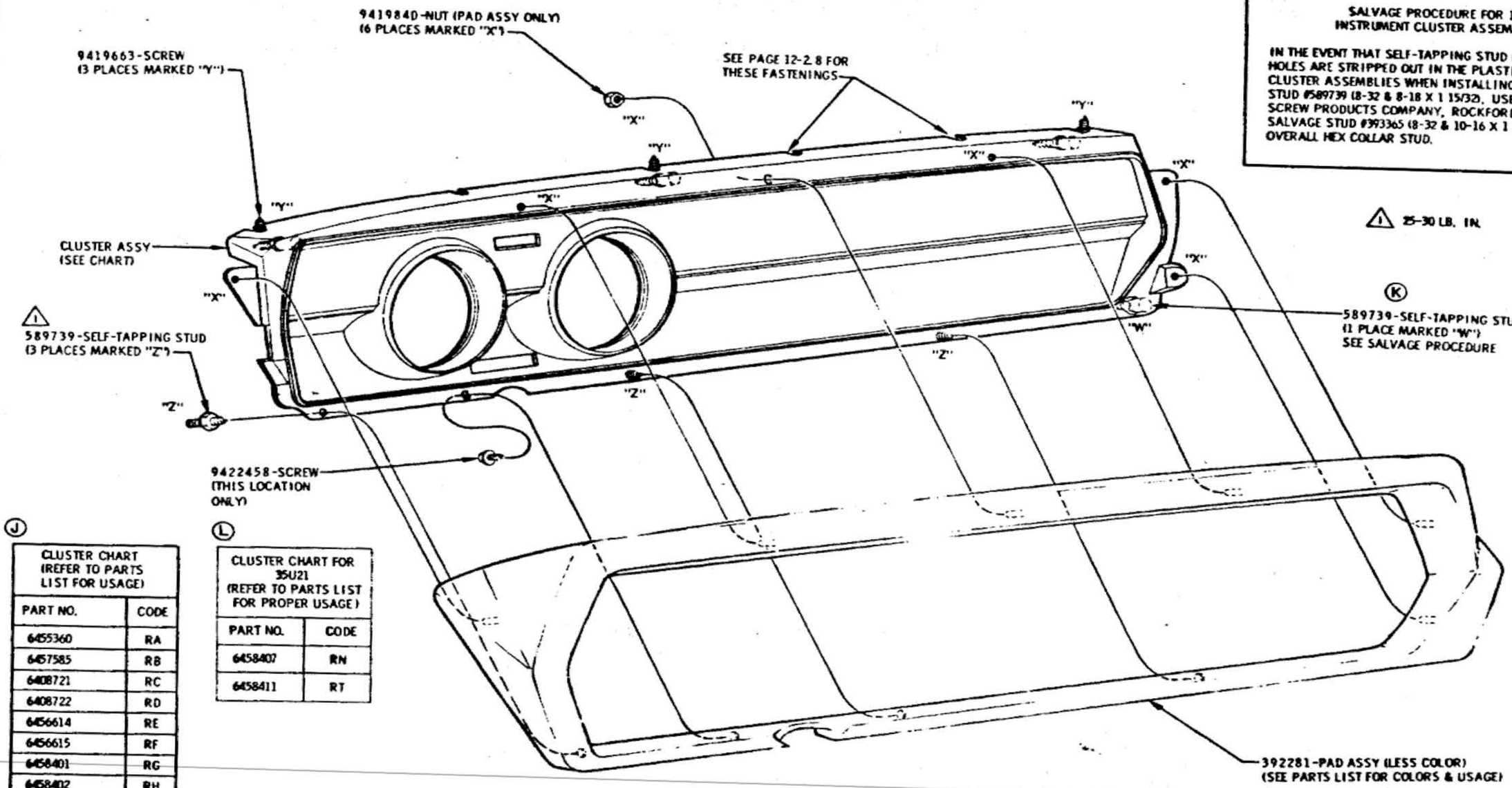

SALVAGE PROCEDURE FOR 1966 INSTRUMENT CLUSTER ASSEMBLIES

IN THE EVENT THAT SELF-TAPPING STUD MOUNTING BOSS HOLES ARE STRIPPED OUT IN THE PLASTIC INSTRUMENT CLUSTER ASSEMBLIES WHEN INSTALLING SELF-TAPPING STUD #589739 (8-32 & 8-18 X 1 15/32), USE ROCKFORD SCREW PRODUCTS COMPANY, ROCKFORD, ILLINOIS. SALVAGE STUD #393365 (8-32 & 10-16 X 1 23/32) SPECIAL OVERALL HEX COLLAR STUD.

⚠1 25-30 LB. IN.

(J)

CLUSTER CHART (REFER TO PARTS LIST FOR USAGE)	
PART NO.	CODE
6455360	RA
6457585	RB
6408721	RC
6408722	RD
6456614	RE
6456615	RF
6458401	RG
6458402	RH
6458397	RJ
6458398	RL

(L)

CLUSTER CHART FOR 35U21 (REFER TO PARTS LIST FOR PROPER USAGE)	
PART NO.	CODE
6458407	RN
6458411	RT

DATE	SYM	REVISION	DR.	CK.	DATE	SYM	REVISION	DR.	CK.	DATE	SYM	REVISION	DR.	CK.
					1-18-66	K	WAS 4 STUDS REQ'D	SK	DT	9-28-65	E	WAS 1 15/32	JJ	JP
					1-13-66	J	CLUSTER ASSY CHART ADD.	SK	DT	9-3-65	D	FASTENINGS REVISED	JJ	DT
					12-16-65	H	TORQUE ADDED	SK	DT	7-27-65	C	392311-PANEL REMOVED	JJ	VP
					11-9-65	G	FASTENING REVISED	JJ	DT	5-21-65	B	SALVAGE NOTE ADDED	JG	VP
2-28-66	L	CHART ADDED	JJ	DT	11-1-65	F	NOTE REVISED	JJ	DT	5-7-65	A	FASTENING REVISED	JJ	VP

CLUSTER & PAD ASSY

INSTALLATION **INSTRUMENT PANEL**

DATE APRIL 20, 1965
DR BY MICH. MODERN
CHECKED
APPR.
APPR.

FIRST USED 1966 — Oldsmobile Graphic Illustration

SERIES A — REQ. 1A28 12J — PAGE 1-6.1 — PART NO. 589998

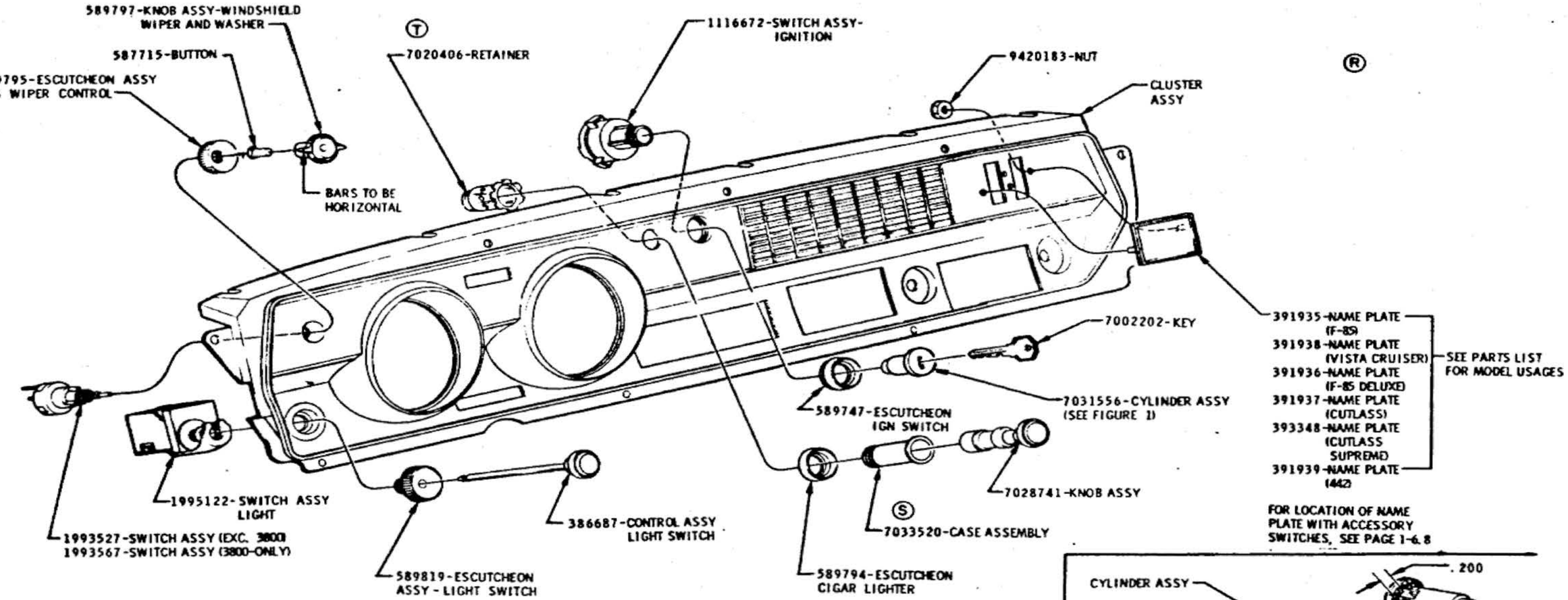

CLUSTER ASSEMBLY

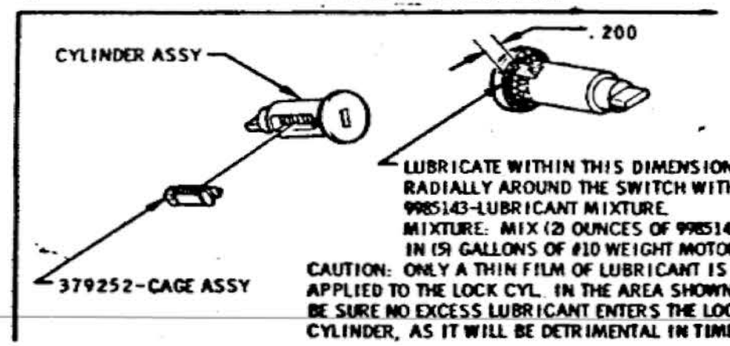

FIGURE 1

ACCESSORY CONTROLS

DATE	SYM	REVISION	DR.	CK.	DATE	SYM	REVISION	DR.	CK.	DATE	SYM	REVISION	DR.	CK.
										2-23-66	T	WAS 7020871 RETAINER ASSY	GK	DT
										3-23-66	S	WAS 7028584 CASE ASSY	GK	DT
										1-19-66	R	CHART MOVED TO PAGE 1-6.1	GK	DT

INSTALLATION **INSTRUMENT PANEL**

DATE FEB. 19, 1965 | DR. BY G. W. KESTER | CHECKED H. VAN PELT | APPR. | APPR.

FIRST USED 1966 | SERIES A | Oldsmobile ILLUSTRATION | REV. | PAGE 1-6.2 | PART NO. 589998

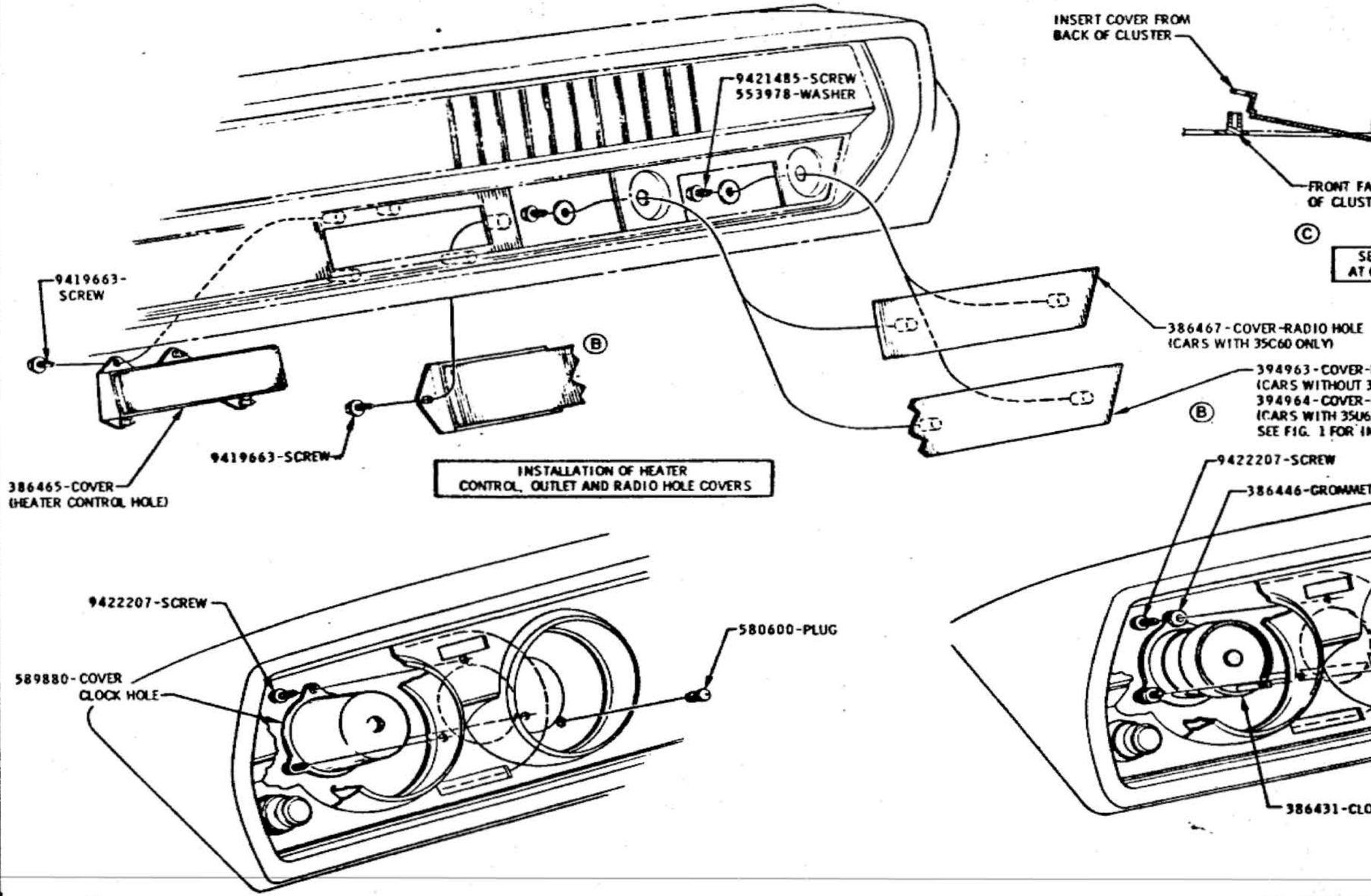

INSTALLATION OF HEATER CONTROL, OUTLET AND RADIO HOLE COVERS

INSTALLATION OF CLOCK HOLE COVER

INSTALLATION OF CLOCK

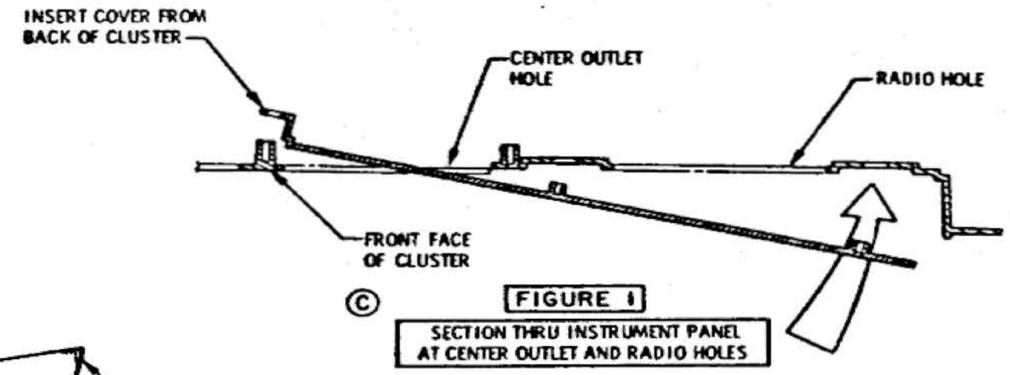

FIGURE 1
SECTION THRU INSTRUMENT PANEL AT CENTER OUTLET AND RADIO HOLES

CLOCK & COVERS

DATE	SYM	REVISION	DR.	CK.	DATE	SYM	REVISION	DR.	CK.	DATE	SYM	REVISION	DR.	CK.
										1-17-66	D	TORQUE SPEC ADDED		DT
										11-9-65	C	VIEW ADDED		DT
										11-9-65	B	HOLE COVERS REVISED		DT
										4-20-65	A	NOTE REVISED		FCJ

INSTALLATION INSTRUMENT PANEL
DATE FEB. 22, 1965
DR. BY MAY & KESTER
CHECKED H. VAN PELT
APPR.
APPR.
FIRST USED 1966
Oldsmobile Service ILLUSTRATION
SERIES A
REV. MCB
PAGE 1-6.3
PART NO. 589998

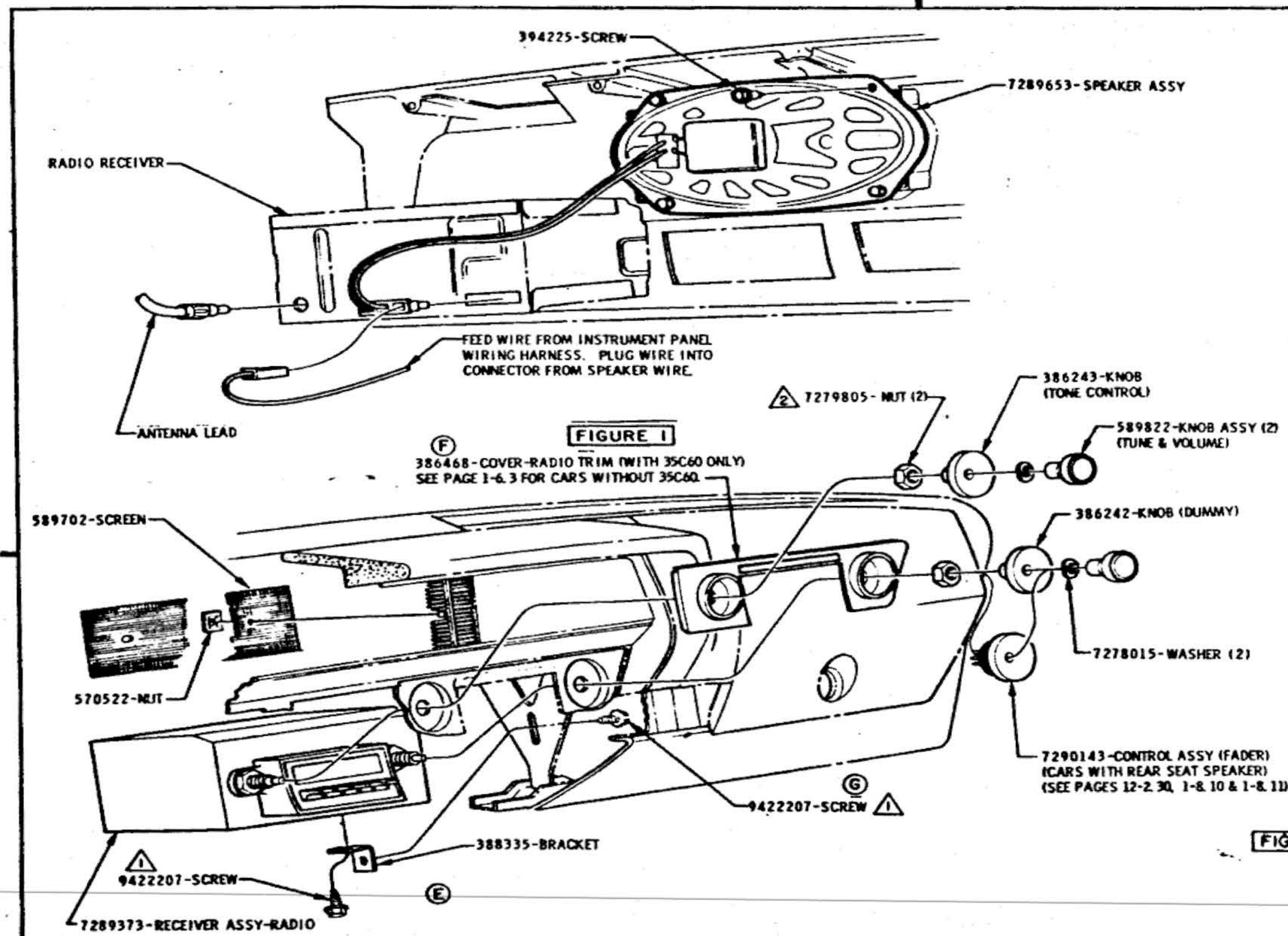

FIGURE 1

FIGURE 2

RADIO RECEIVER AND SPEAKER INSTALLATION

ANTENNA TRIMMING INSTRUCTIONS

EXTEND ANTENNA MAST TO 31 IN. PLUS OR MINUS 1 IN. ADVANCE VOLUME CONTROL TO FULL ON. TUNE RADIO TO THE PROVIDED SIGNAL (AT OR NEAR 1400 KC) WHICH HAS BEEN ADJUSTED TO PROVIDE THE LOWEST PRACTICAL AMOUNT OF SOUND FROM THE RADIO AFTER THE TRIMMER HAS BEEN PEAKED. CAREFULLY TURN ANTENNA TRIMMING SCREW BACK AND FORTH UNTIL MAXIMUM VOLUME HAS BEEN RECEIVED.

CAUTION: DO NOT TURN RADIO ON UNLESS SHUNT WIRE OR SPEAKER FADER CONTROL IS INSTALLED.

TRIMMING TO BE DONE AFTER ALL SHEET METAL HAS BEEN INSTALLED

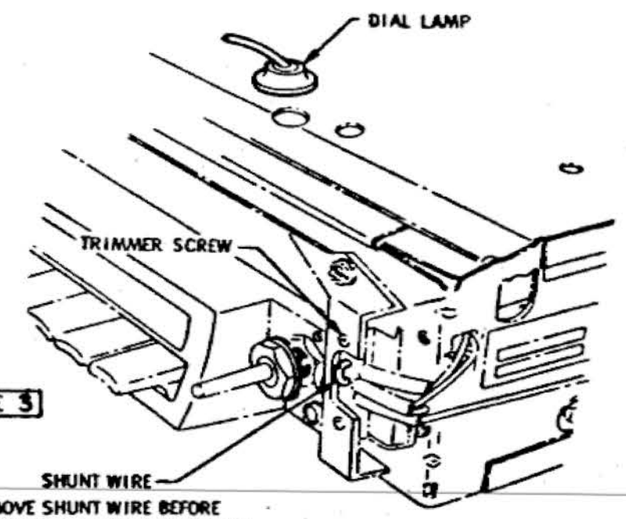

FIGURE 3

REMOVE SHUNT WIRE BEFORE INSTALLING FADER CONTROL ON CARS WITH REAR SEAT SPEAKER

RADIO RECEIVER & FRONT SPEAKER

DATE	SYM	REVISION	DR.	CK.	DATE	SYM	REVISION	DR.	CK.	DATE	SYM	REVISION	DR.	CK.
										9-17-65	E	PRE2562-NUT REMOVED		DT
										9-7-65	D	WAS 9422207-SCREW		DT
										7-21-65	C	PART NO. ADDED		VP
					1-13-66	B	TORQUE SPECS ADDED		DT	4-20-65	B	SCREEN ADDED		DT
					11-9-65	F	NOTE REVISED		DT	4-20-65	A	WAS PAGE 1-6.7		F.J.

INSTALLATION **INSTRUMENT PANEL**

DATE MARCH, 1, 1965
DR. BY J. GALL
CHECKED R. VAN PELT
APPR.
APPR.

FIRST USED 1966 — Oldsmobile Service ILLUSTRATION

SERIES A — REV. 35 U 63

PAGE 1-6.4

PART NO. 589998

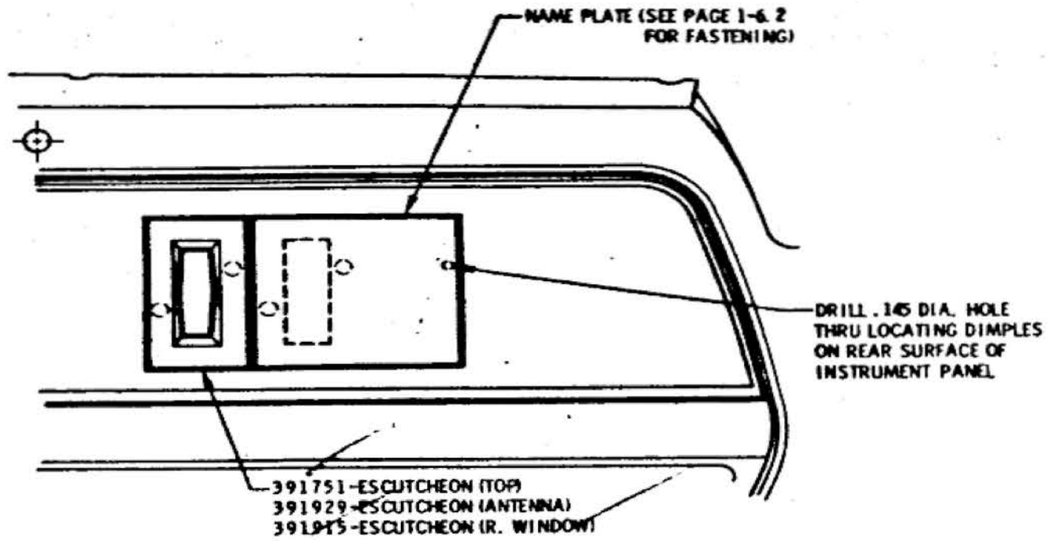

LOCATION OF NAME PLATE WITH ONE ACCESSORY SWITCH

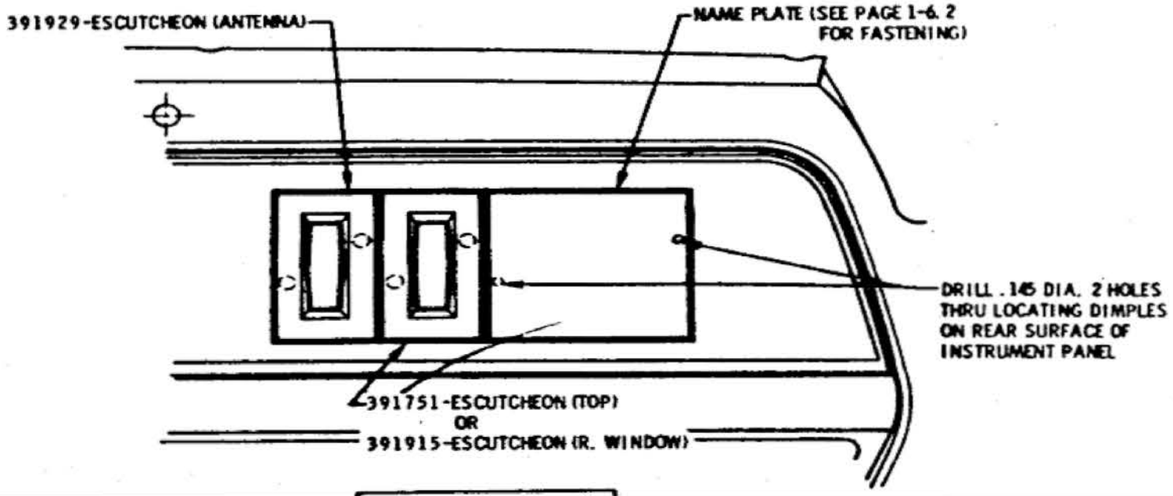

LOCATION OF NAME PLATE WITH TWO ACCESSORY SWITCHES

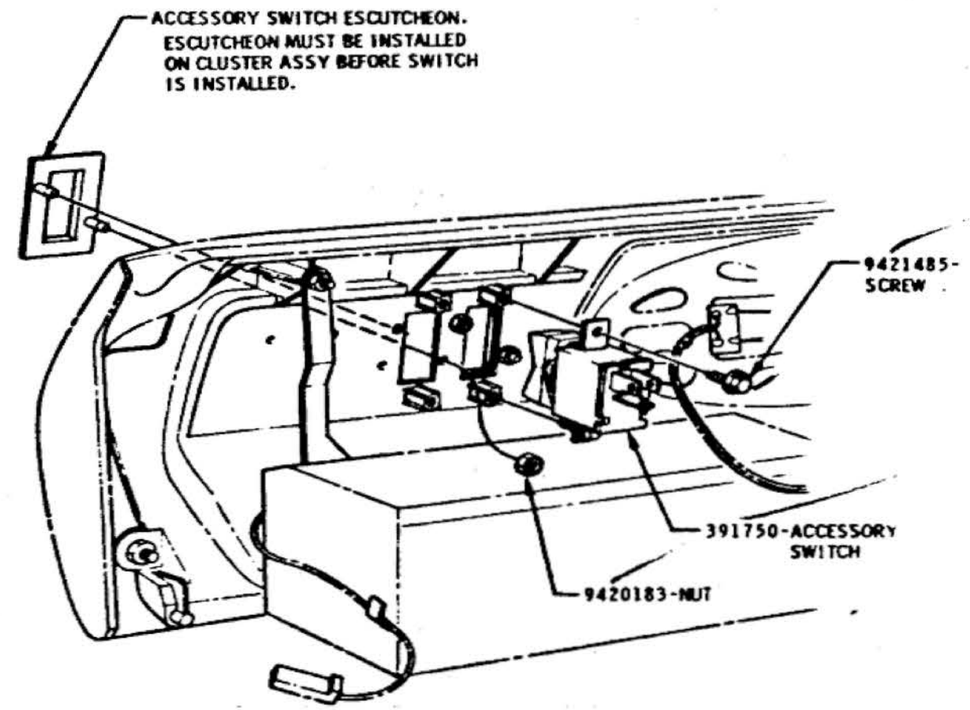

TYPICAL SWITCH AND ESCUTCHEON FASTENING

ACCESSORY SWITCHES

DATE	SYM	REVISION	DR.	CK.	DATE	SYM	REVISION	DR.	CK.	DATE	SYM	REVISION	DR.	CK.
										9-20-65	A	WAS PAGE 1-6.8		

INSTALLATION	INSTRUMENT PANEL		
DATE MAR. 25, 1965	FIRST USED 1966	Oldsmobile Classic ILLUSTRATION	PAGE 1-6.5
DR. BY JOE V. GALL			
CHECKED H. VAN PELT	SERIES A	REV. 12L	PART NO. 589998
APPR. D. SEVERANCE			
APPR.			

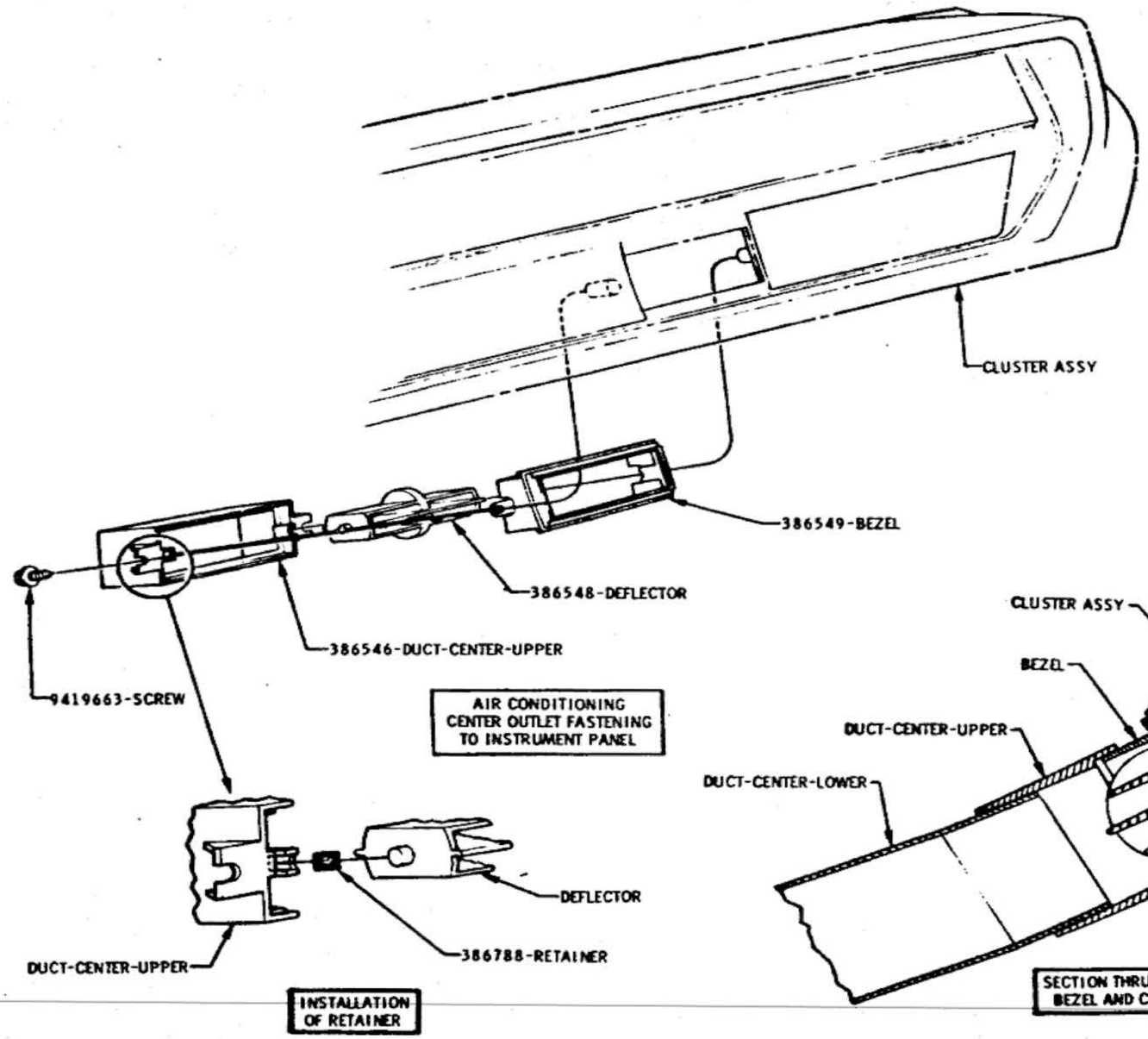

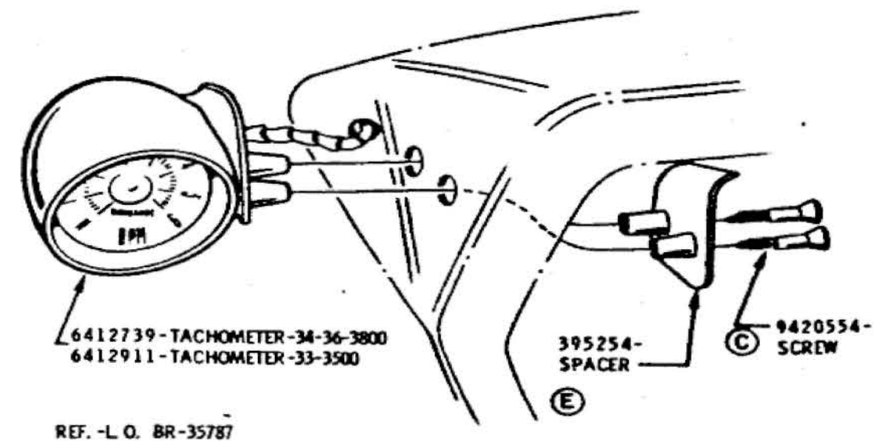

TACHOMETER & A/C CENTER OUTLET

DATE	SYM	REVISION	BR.	CK.	DATE	SYM	REVISION	BR.	CK.	DATE	SYM	REVISION	DR.	CK.
										8-9-65	E	WAS 392704-SPACER		DT
										9-9-65	D	VIEW REMOVED		DT
										8-20-65	C	WAS 9425719 SCREW		JJVD
										5-25-65	B	TACH. INFORMATION ADDED		VP
										4-20-65	A	WAS PAGE 1-6.10		Fd.

INSTALLATION — INSTRUMENT PANEL

DATE MAR. 20, 1965
DR. BY JOE V GALL
CHECKED H. VAN PELT
APPR. Z. E. Brainerd
APPR.

FIRST USED 1966

Oldsmobile GRAPHIC ILLUSTRATION

SERIES A

REF. 35-C-60, 35-U-16

PAGE 1-6.6

PART NO. 589998

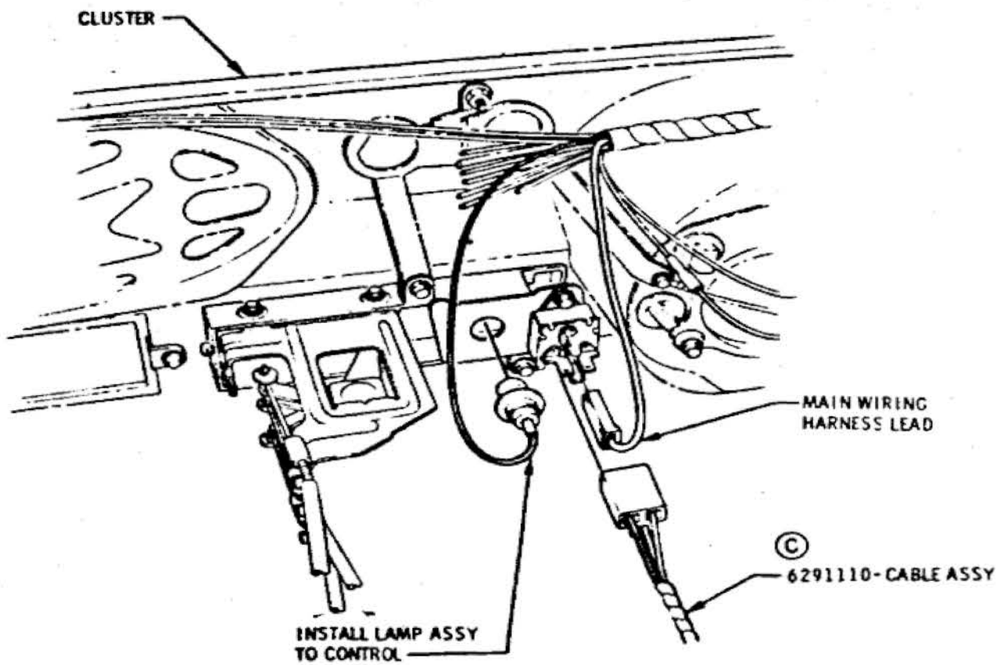

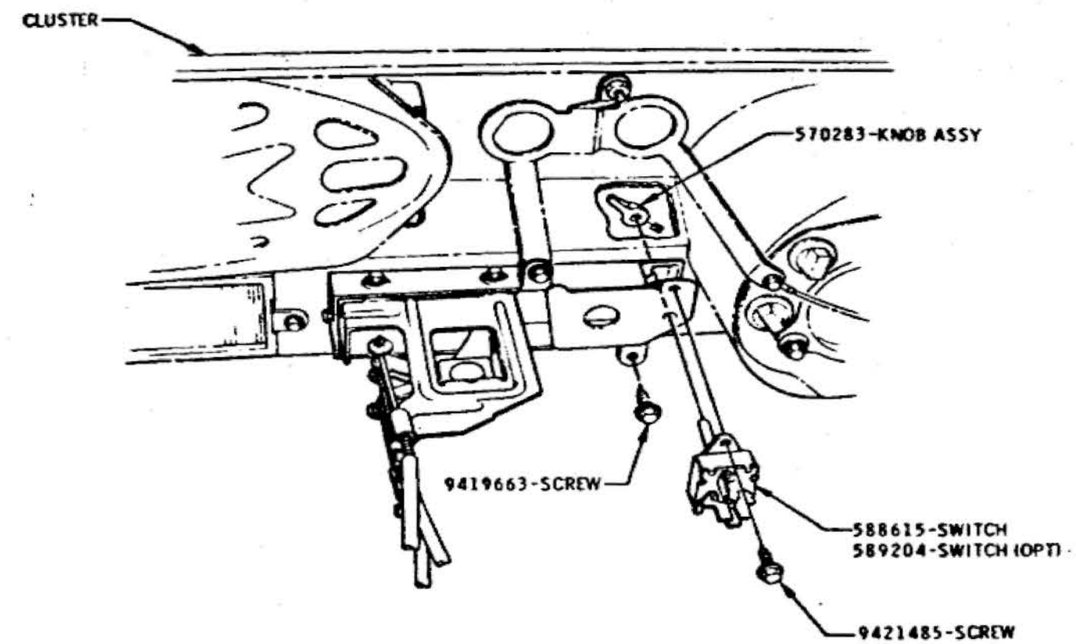

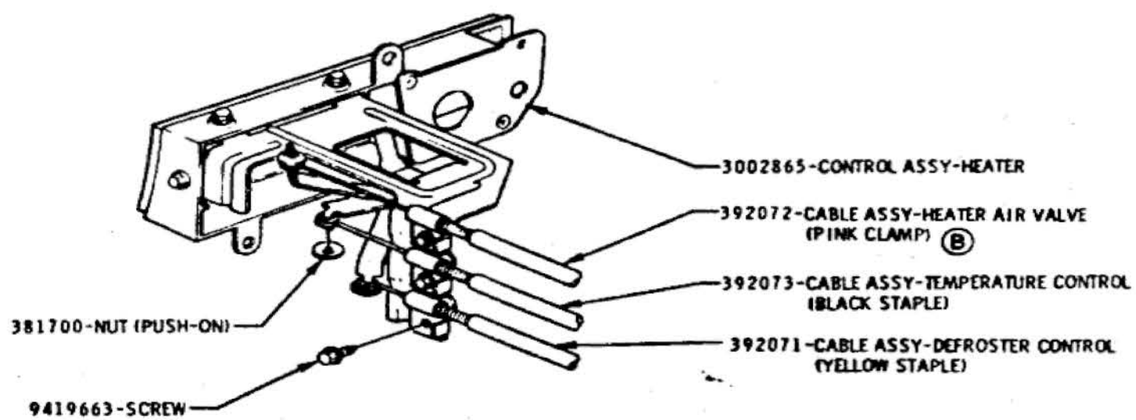

TYPICAL CABLE FASTENING TO HEATER CONTROL

HEATER CONTROL

DATE	SYM	REVISION	DR.	CK.	DATE	SYM	REVISION	DR.	CK.	DATE	SYM	REVISION	DR.	CK.
										3-15-66	C	WAS 2983742 HARNESS GROUP		
										5-6-65	B	WAS WHITE CLAMP	JC	JD
										4-20-65	A	REVISED		

INSTALLATION **INSTRUMENT PANEL**

DATE APR. 13 1965
DR. BY JOE GALL
CHECKED H. VAN PELT
APPR.
APPR.

FIRST USED 1966 — Oldsmobile Service ILLUSTRATION

SERIES A — REF. 142C

PAGE 1-6.7

PART NO. 589998

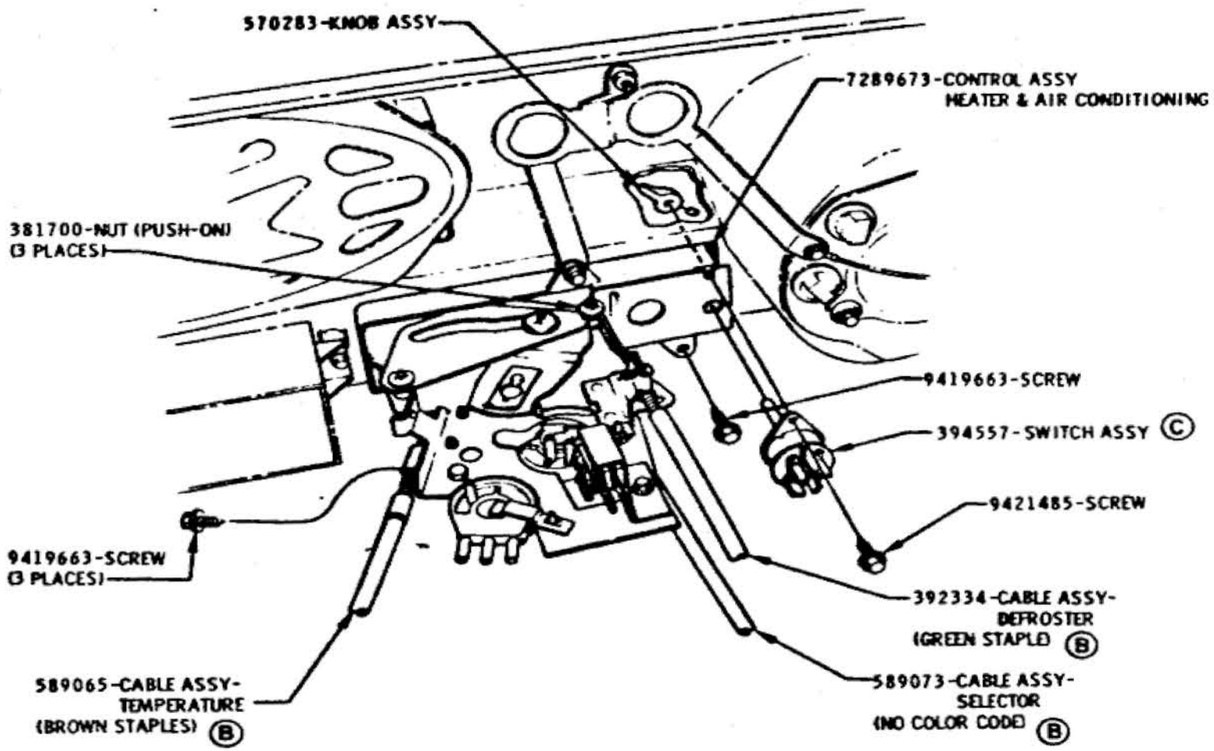

HEATER-AIR CONDITIONING CONTROL

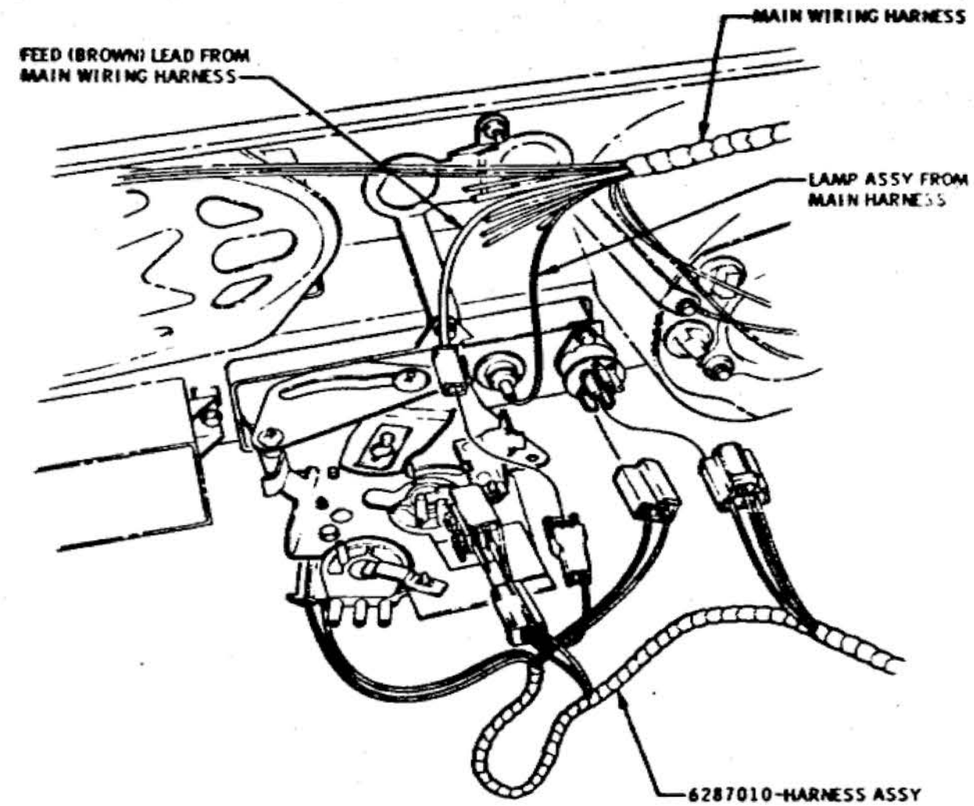

CONTROL WIRING

HEATER-A/C CONTROL & WIRING

DATE	SYM	REVISION	DR.	CK.	DATE	SYM	REVISION	DR.	CK.	DATE	SYM	REVISION	DR.	CK.
										10-1965	C	589605 - SWITCH ASSY		DT
										5-6-65	B	COLOR CODE ADDED		VP
										[illegible]	A	REVISED		

INSTALLATION INSTRUMENT PANEL

DATE MAR. 25, 1965
DR. BY JOE GALL
CHECKED H. VAN PELT
APPR.
APPR.

FIRST USED 1966

Oldsmobile Service ILLUSTRATION

SERIES A

REF. 55C60

PAGE I-6.8

PART NO. 589998

OLDSMOBILE DIVISION GENERAL MOTORS CORPORATION LANSING — MICHIGAN

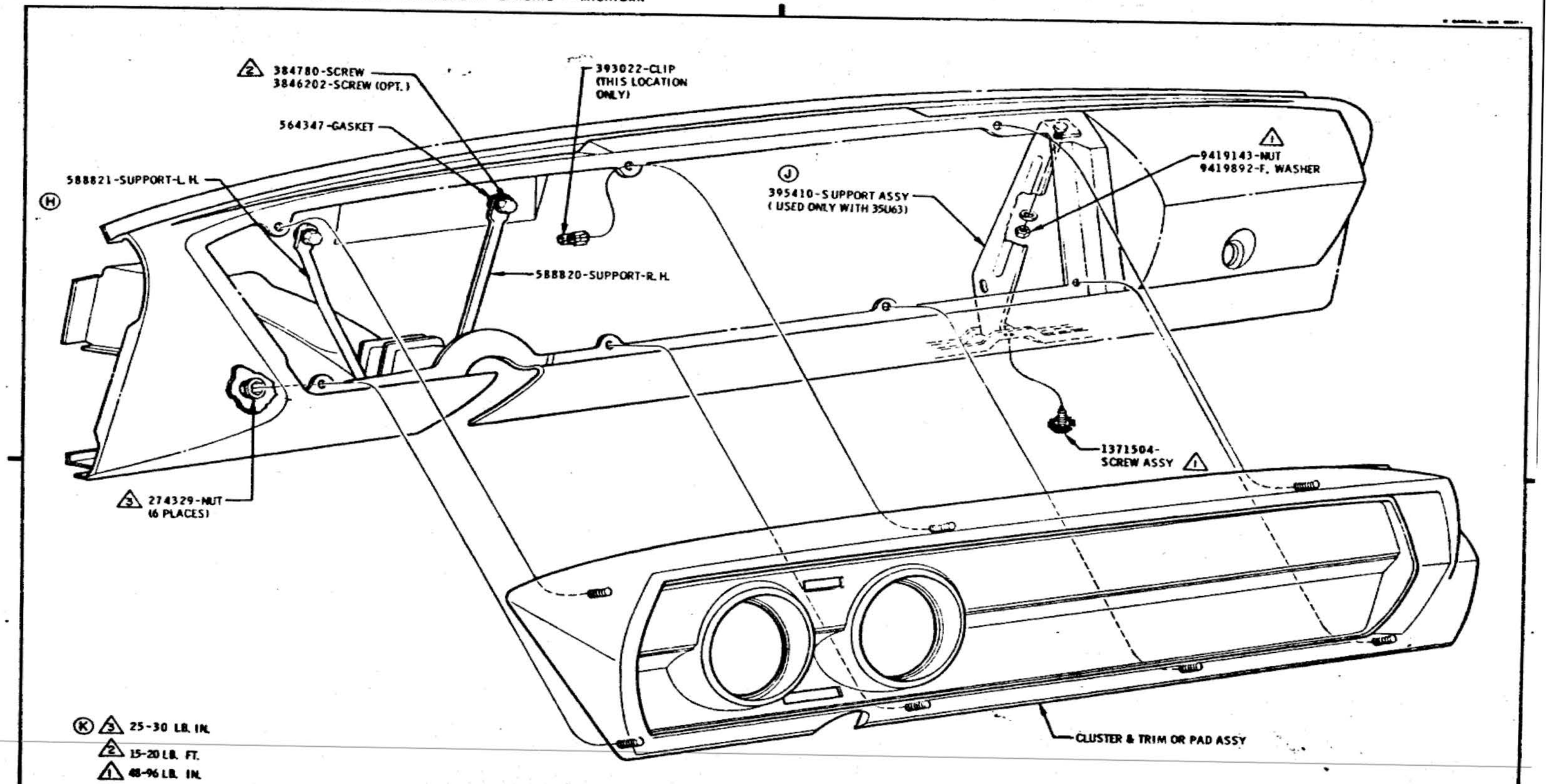

DATE	SYM	REVISION	DR.	CK.	DATE	SYM	REVISION	DR.	CK.	DATE	SYM	REVISION	DR.	CK.
					10-14-65	K	TORQUE ADDED	GA	DT	6-2-65	E	WAS 393235	DS	VP
					12-14-65	J	WAS 983289 SUPT ASSY	GA	DT	5-17-65	D	WAS 942403 NUT	DS	VP
					10-12-65	H	WAS 1241795 SUPPORT	GA	DT	5-17-65	C2	PART NO.'S ADDED	DS	VP
					8-6-65	G	NOTE REVISED	JM	VP	4-30-65	B	FASTENINGS REVISED	DS	VP
					7-26-65	F2	PART NO'S & TORQUES ADDED	CG	VP	4-20-65	A	REVISED	DS	VP

RADIO SUPPORT, CLUSTER & PAD ASSY

INSTALLATION **INSTRUMENT PANEL**

DATE MAR. 25, 1966

DR. BY MICH. MODERN

CHECKED VAN PELT

APPR.

APPR.

FIRST USED 1966

SERIES A

REF.

PAGE 1-6.9

PART NO. 589998

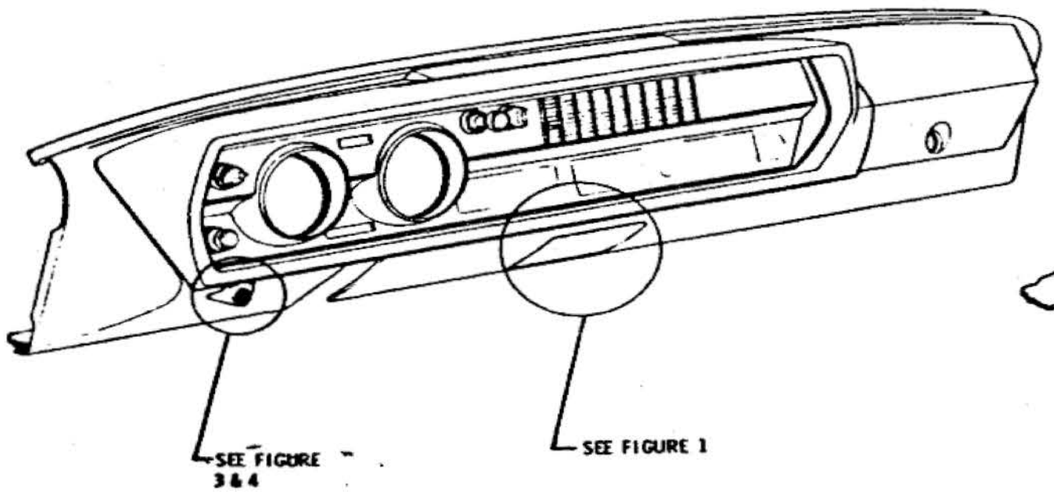

FIGURE 2

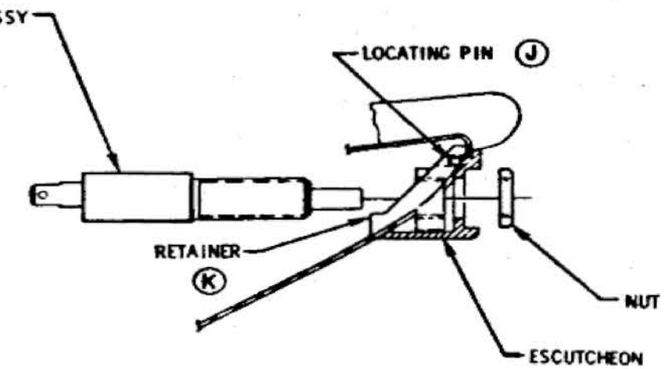

FIGURE 3

SECTION THRU INSTRUMENT PANEL AT CRUISE CONTROL SWITCH

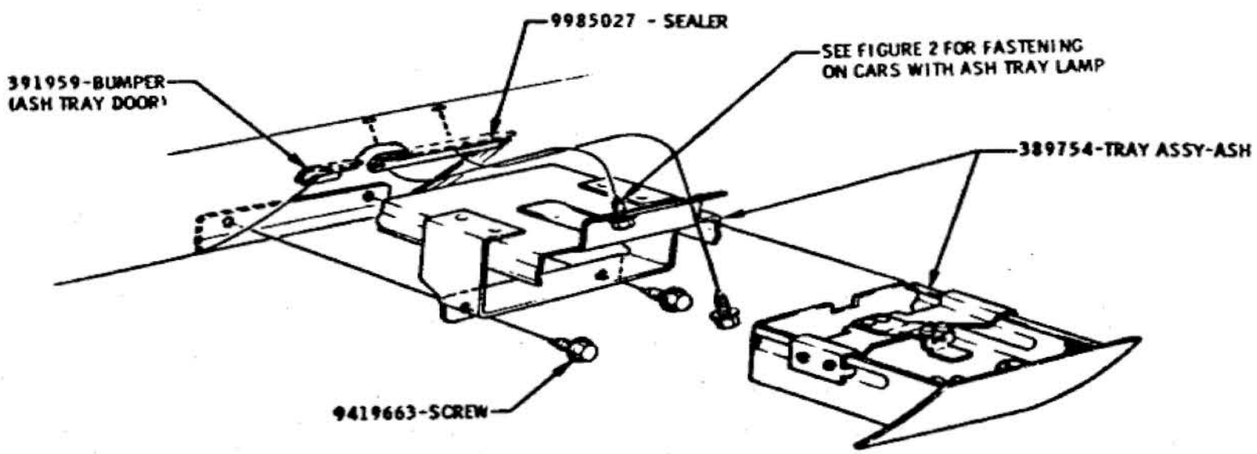

FIGURE 1

ASH TRAY INSTALLATION

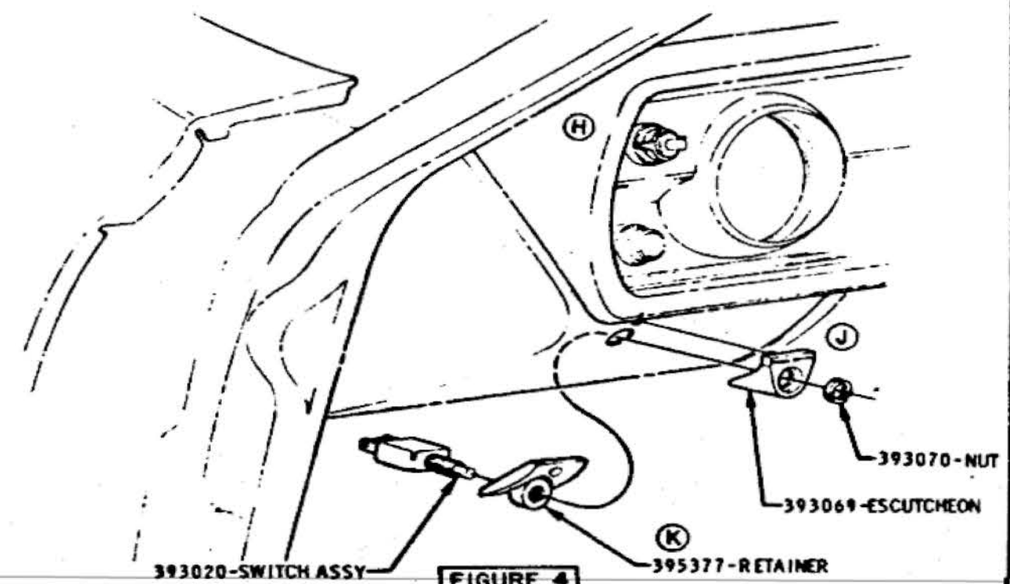

FIGURE 4

CRUISE CONTROL SWITCH INSTALLATION

ASH TRAY & 35K30 SWITCH ASSY

DATE	SYM	REVISION	DR.	CK.	DATE	SYM	REVISION	DR.	CK.	DATE	SYM	REVISION	DR.	CK.
					1-29-66	K	WAS 393068-BRACKET		DT	6-22-65	E	WAS 393064 ESC.		DT
					11-8-65	J	LOCATING PIN ADDED		DT	5-28-65	D	VIEW ADDED		
					[illegible]	H	BACKGROUND REVISED		DT	5-10-65	C	PART NO. ADDED		VP
					7-7-65	G	SEALER ADDED			[illegible]	B	VIEW ADDED		
					[illegible]	F	VIEWS REVISED		DT	[illegible]	A	WAS PAGE 1-6.4		

INSTALLATION **INSTRUMENT PANEL**

DATE FEB. 19, 1965

DR. BY G. W. KESTER

CHECKED N. MAN FELT

APPR.

APPR.

FIRST MOD. 1966

SERIES A

Oldsmobile Classic ILLUSTRATION

REF. MPC 20-24606

PAGE 1-6.10

PART NO. 589998

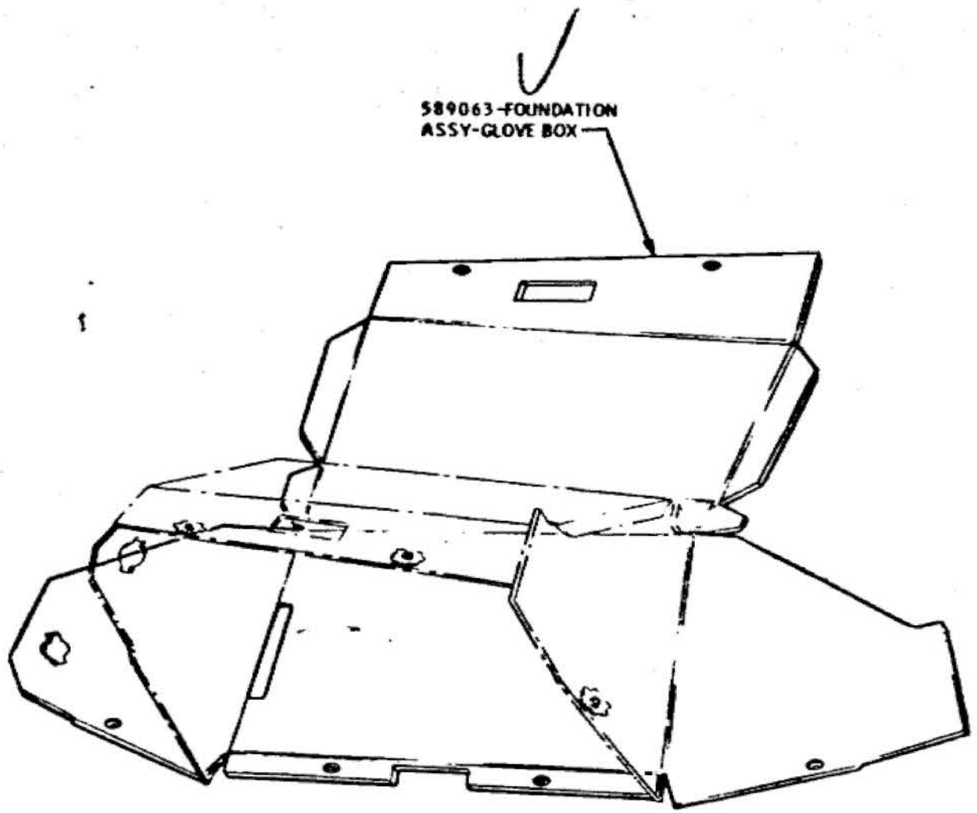

FOLD FOUNDATION ASSY AT CREASES INTO SHAPE SHOWN

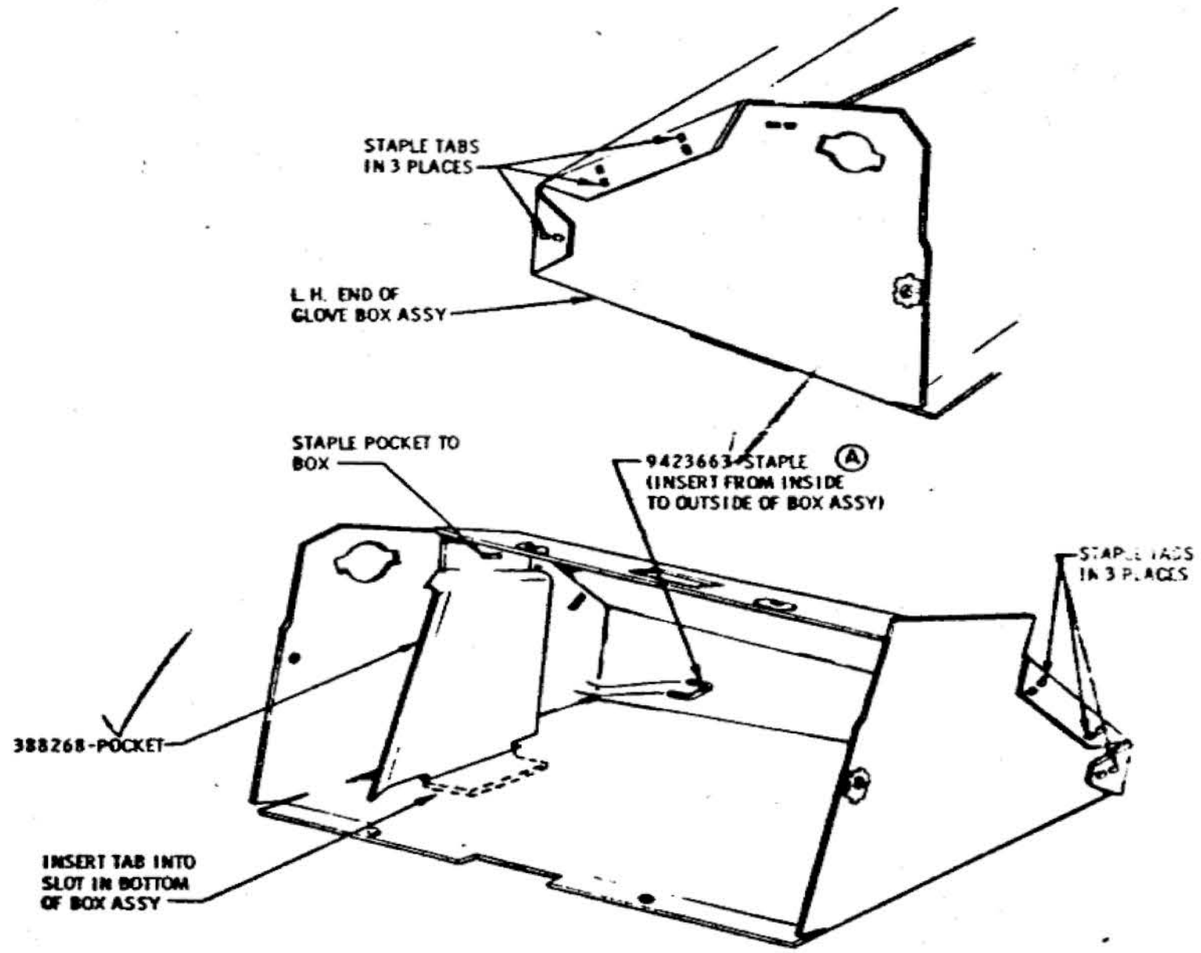

ASSEMBLING OF GLOVE BOX ASSY

GLOVE BOX ASSEMBLY

DATE	SYM	REVISION	DR.	CK.	DATE	SYM	REVISION	DR.	CK.	DATE	SYM	REVISION	DR.	CK.
										5-3-65	A	WAS 9422044 STAPLE	CG	JP

INSTALLATION INSTRUMENT PANEL PARTS

DATE FEB. 19, 1965

DR. BY B. PARKER

CHECKED H. VAN PELT

APPR. [illegible]

APPR.

PROJECT NUMBER 1966

ILLUSTRATION

PAGE 1-6, 11

SERIES A

REF. 1A28

PART NO. 589998

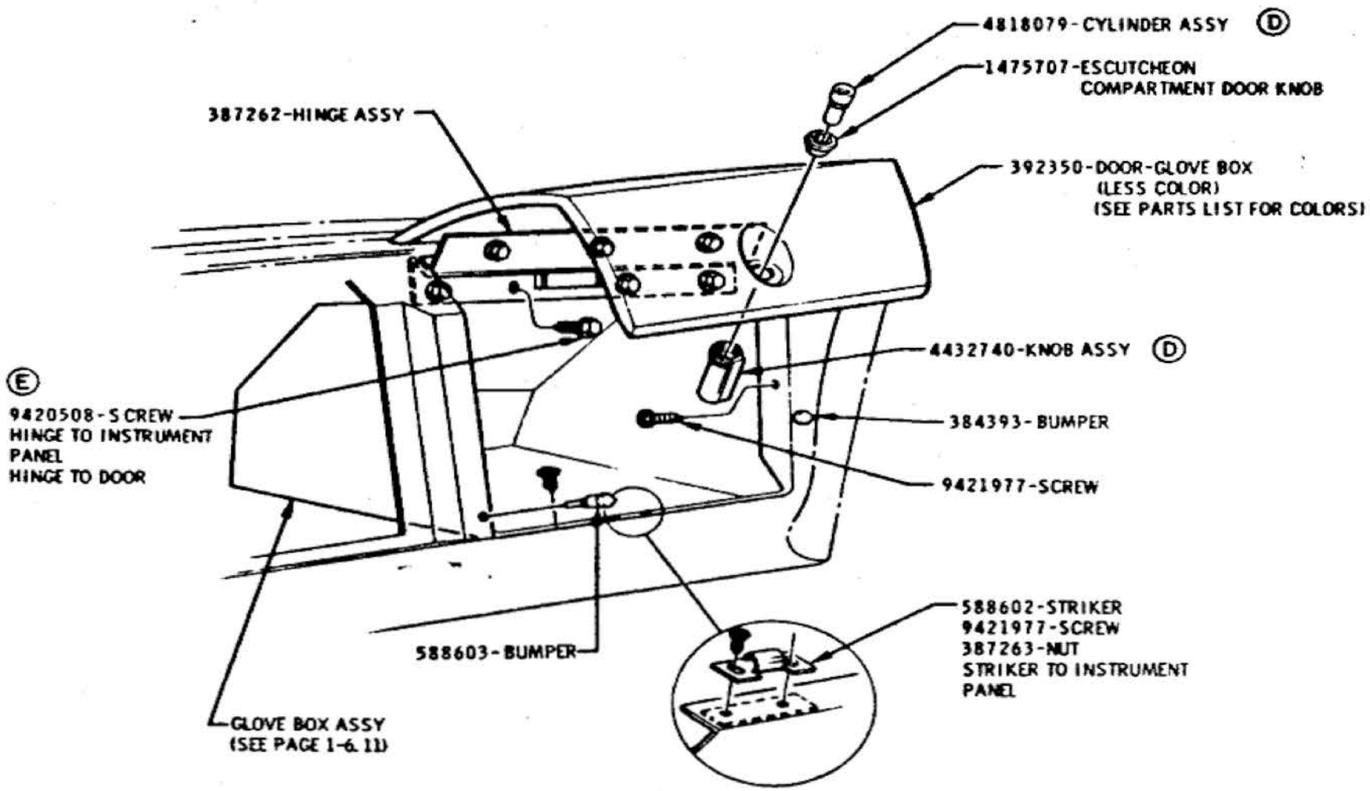

(C)

GLOVE BOX DOOR ASSY

GLOVE BOX

DATE	SYM	REVISION	DR.	CK.	DATE	SYM	REVISION	DR.	CK.	DATE	SYM	REVISION	DR.	CK.
										9-28-66	E	WAS 9420-9 SCREW	JR	JW
										1-8-66	D	NOTES REVERSED		
										7-23-65	C	VIEW REMOVED		VP
										5-6-65	B	NOTE REVISED	CG	VP
										4-30-65	A	WAS 4432739 KNOB ASSY		VP

INSTALLATION **INSTRUMENT PANEL**

DATE FEB. 19, 1965
DR. BY C.E. MAY
CHECKED N. VAN FELT
APPR. Jul
APPR.

SERIES 1966 — Oldsmobile Graphic Illustration

SERIES A — REV. 4-28

PAGE 1-6.12

PART NO. 589998

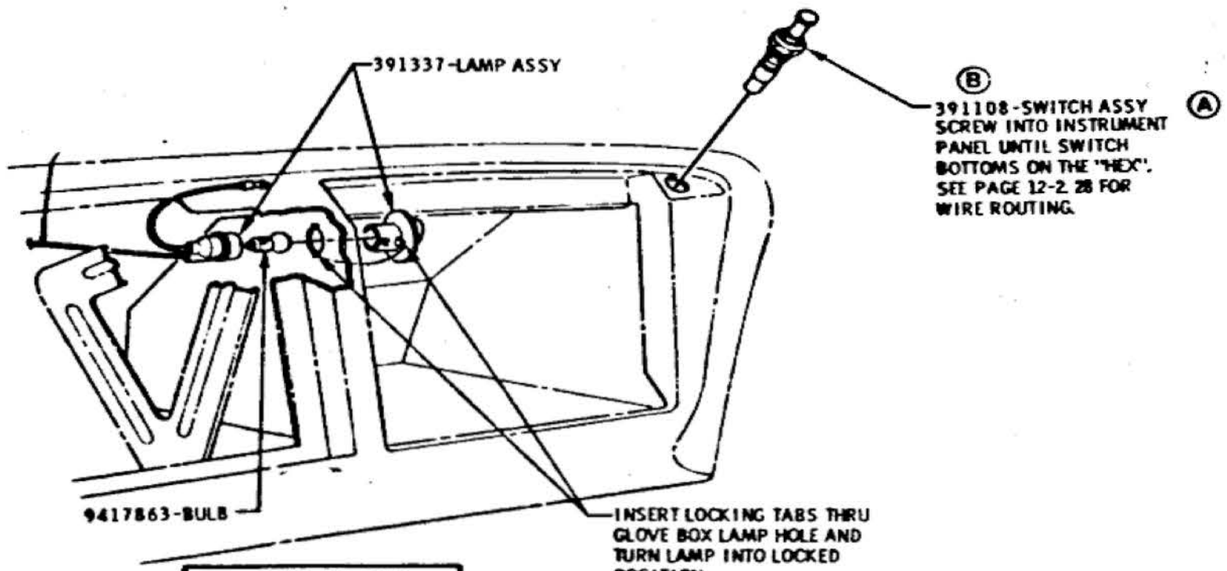

GLOVE BOX LAMP AND SWITCH INSTALLATION

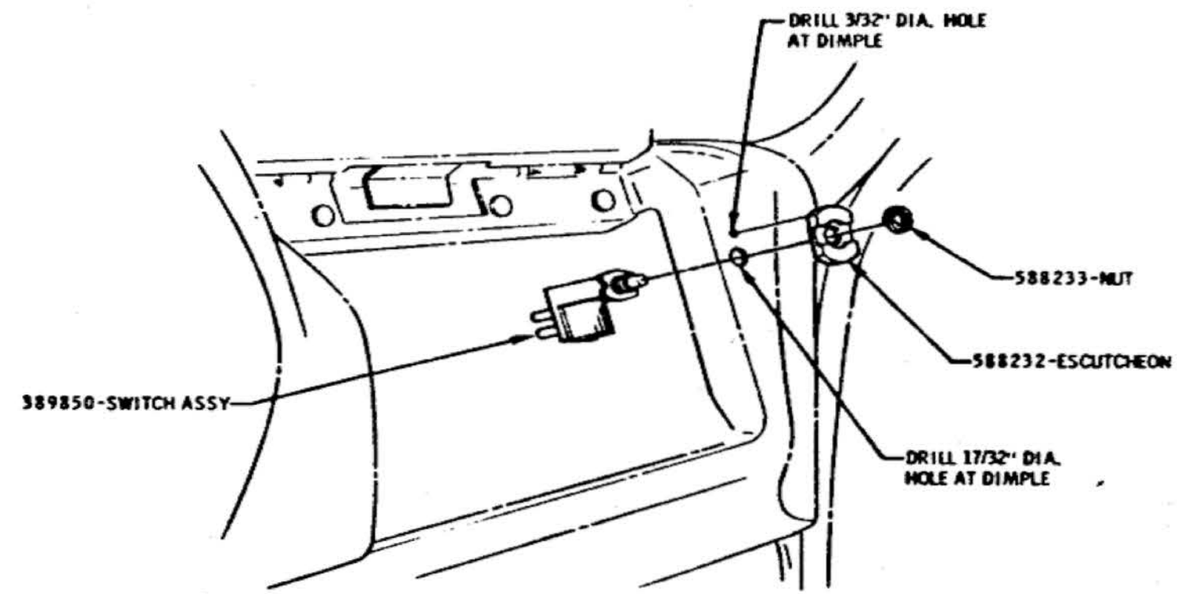

SWITCH INSTALLATION VACUUM TRUNK

VACUUM TRUNK SWITCH AND GLOVE BOX LAMP AND SWITCH

DATE	SYM	REVISION	DR.	CK.	DATE	SYM	REVISION	DR.	CK.	DATE	SYM	REVISION	DR.	CK.
										12-5-66	B	WAS 390108 SWITCH	JG	DT
										8-6-65	A	NOTE REVISED		VP

INSTALLATION	INSTRUMENT PANEL		
DATE MAR 25, 1965	PROJECT YEAR 1966		PAGE 1-6.13
DR. BY JOE K GALL			
CHECKED H. VAN PELT	SERIES A	REF. 35 YGO	PART NO. 589998
APPR.			

OLDSMOBILE PRODUCT INFORMATION MANUAL

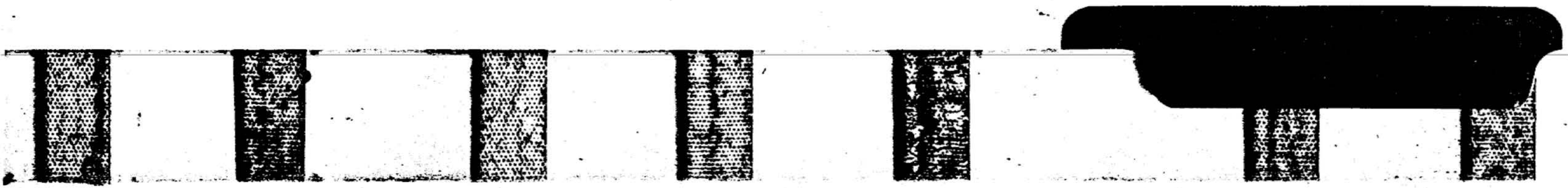

1-MISC. BODY PARTS

GROUP 1-MISCELLANEOUS BODY PARTS

FRONT FLOOR AND FRONT SEAT PROTECTOR COVER---------- 1-8.1
OUTSIDE REAR VIEW MIRROR---------- 1-8.2
REMOTE CONTROL MIRROR (OUTSIDE) (2 CABLE)---------- 1-8.3
REMOTE CONTROL MIRROR (OUTSIDE) (3 CABLE)---------- 1-8.3A
ELECTRIC ANTENNA (EXCEPT STATION WAGON)---------- 1-8.4
ELECTRIC ANTENNA (STATION WAGONS)---------- 1-8.5
MANUAL ANTENNA---------- 1-8.6
TRUNK COMPARTMENT MOULDING STUD COVERS---------- 1-8.7
LUGGAGE CARRIER---------- 1-8.8
LUGGAGE CARRIER---------- 1-8.9
REAR SEAT SPEAKER---------- 1-8.10
REAR SEAT SPEAKER (STATION WAGON)---------- 1-8.11
STATION WAGON PLATFORM---------- 1-8.12
ROCKER PANEL ACCESS HOLE PLUG---------- 1-8.13

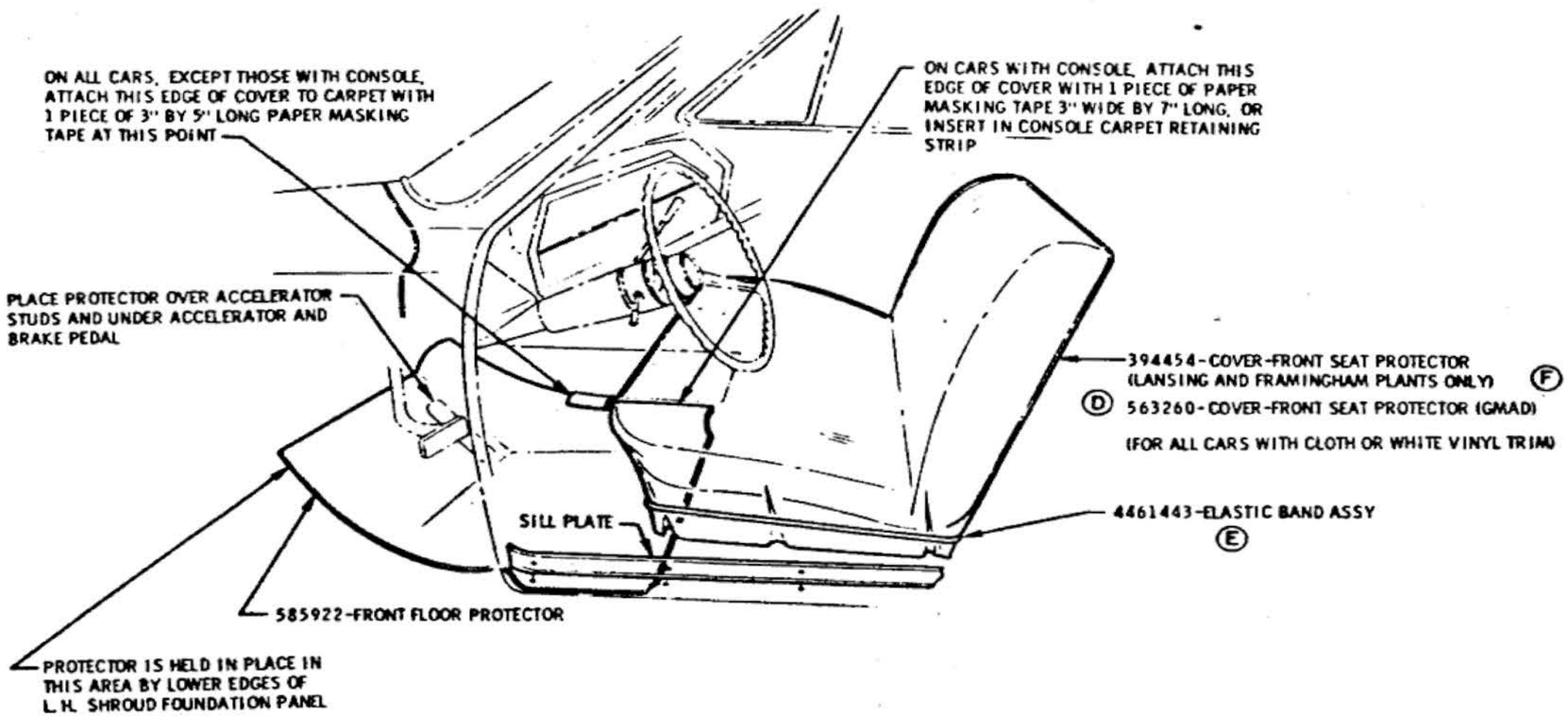

INSTALLATION OF FRONT FLOOR PROTECTORS AND FRONT SEAT PROTECTORS

FRONT FLOOR & FRONT SEAT PROTECTOR COVER

DATE	SYM	REVISION	DR.	CK.	DATE	SYM	REVISION	DR.	CK.	DATE	SYM	REVISION	DR.	CK.
										12-7-65	E	BAND RELOCATED	CB	DT
										10-6-65	D	NOTE ADDED	CB	DT
										10-5-65	C	394454 COVER ADDED	CB	DT
										9-20-65	B	OPTION REMOVED	GC	DT
					9-10-64	F	NOTE REVISED	CB	DT	4-6-65	A	WAS 589397 SEAT COVER	CG	VP

INSTALLATION MISCELLANEOUS BODY PARTS

DATE FEB. 15, 1965
DR. BY CH. BEACHNAU
CHECKED H. VAN PELT
APPR. G. WINHART
APPR.

FIRST USED 1966
SERIES A
REF. 14-G
ILLUSTRATION
PAGE 1-8.1
PART NO. 589998

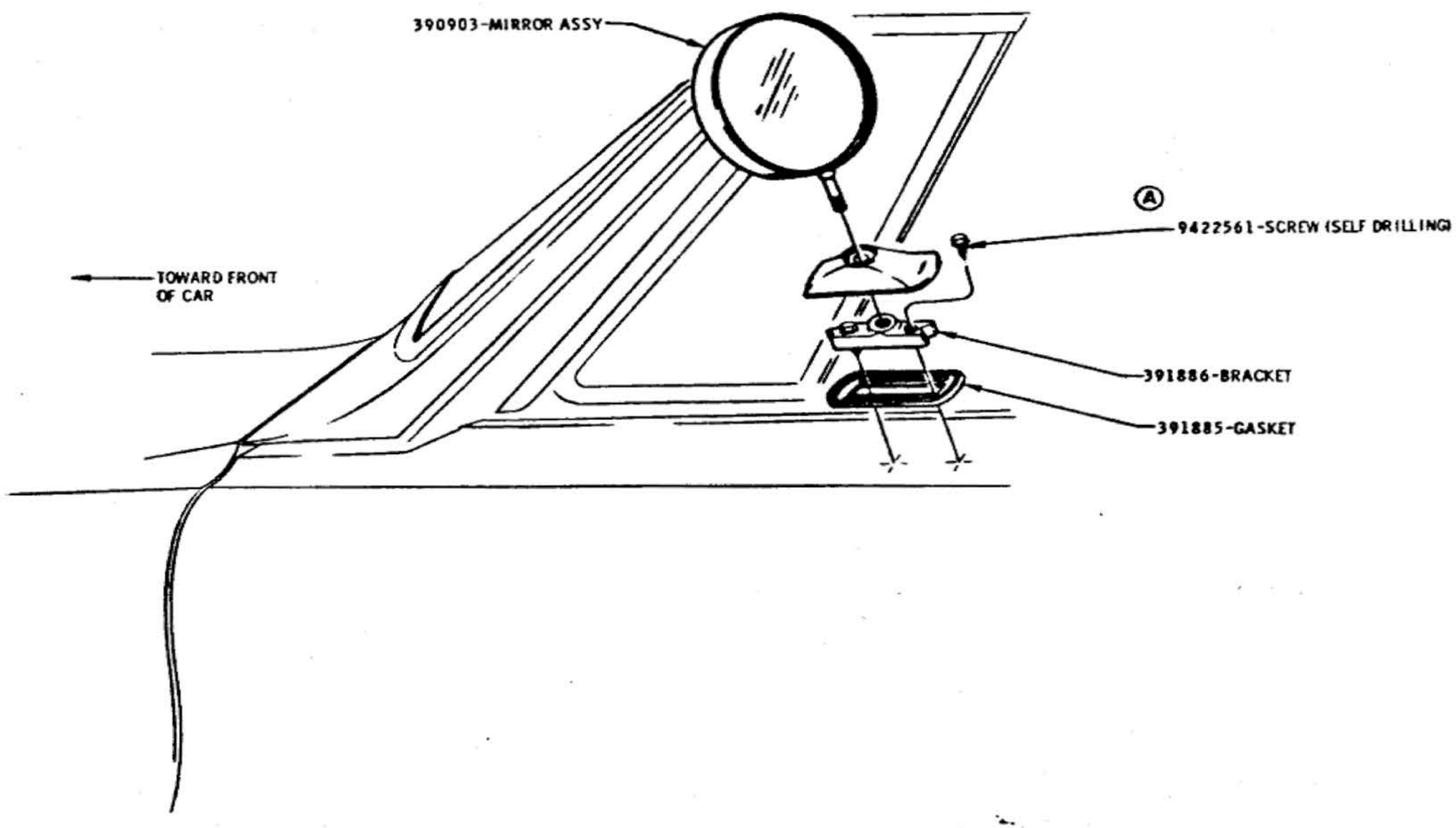

OUTSIDE REAR VIEW MIRROR

DATE	SYM	REVISION	DR.	CK.	DATE	SYM	REVISION	DR.	CK.	DATE	SYM	REVISION	DR.	CK.
										7-19-65	A	WAS 9420590-SCREW		

INSTALLATION **MISCELLANEOUS BODY PARTS**

DATE FEB. 18, 1965
DR. BY B. PARKER
CHECKED H. VAN PELT
APPR. G. NIHART
APPR.

FIRST USED 1966 — Oldsmobile Service ILLUSTRATION

SERIES A — REF. SSD 32 — PAGE 1-8.2 — PART NO. 589998

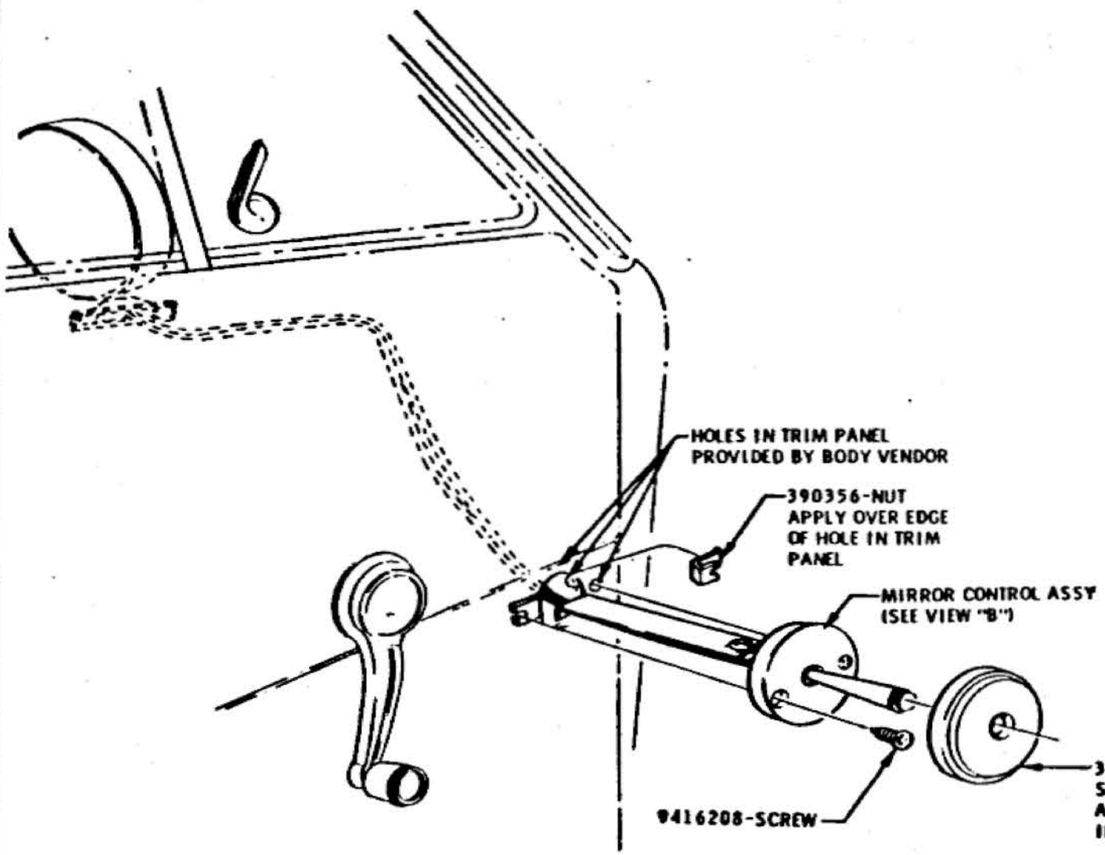

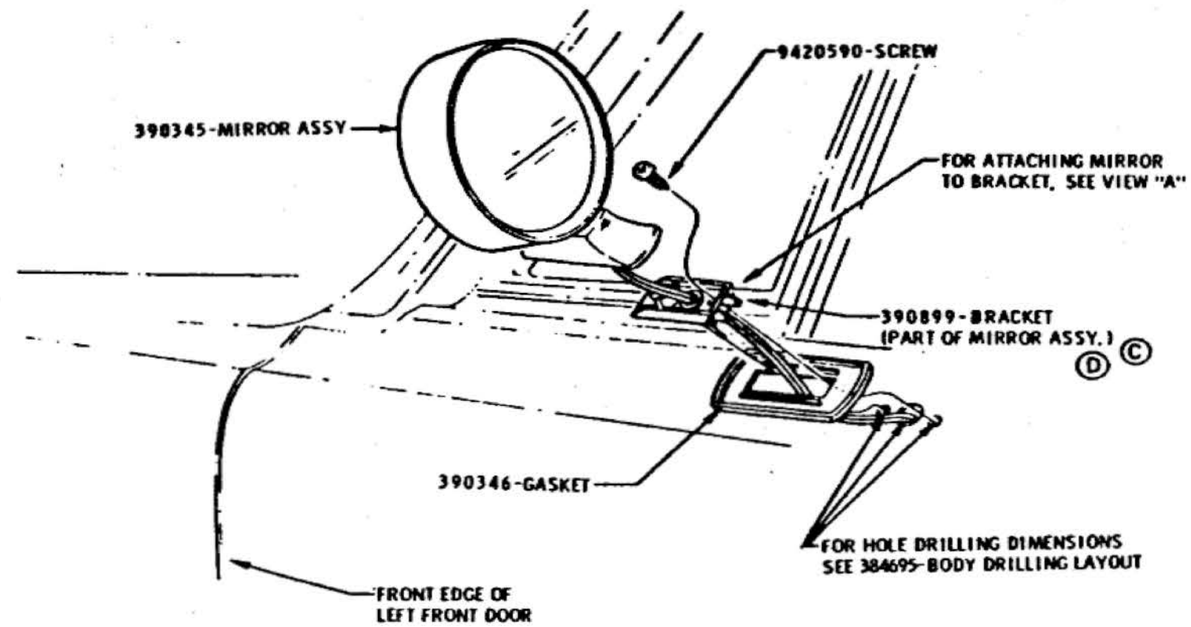

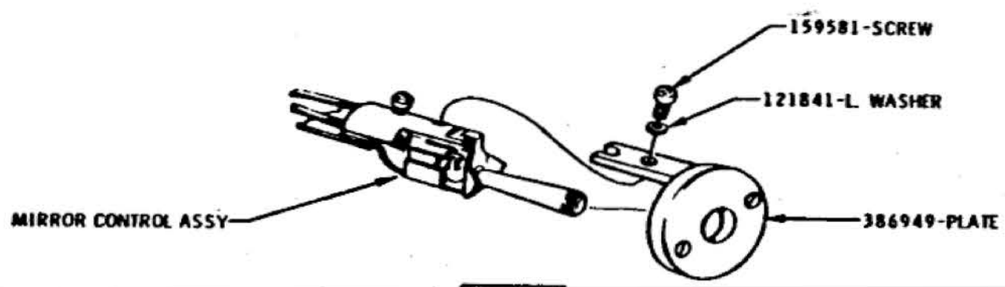

VIEW "B"

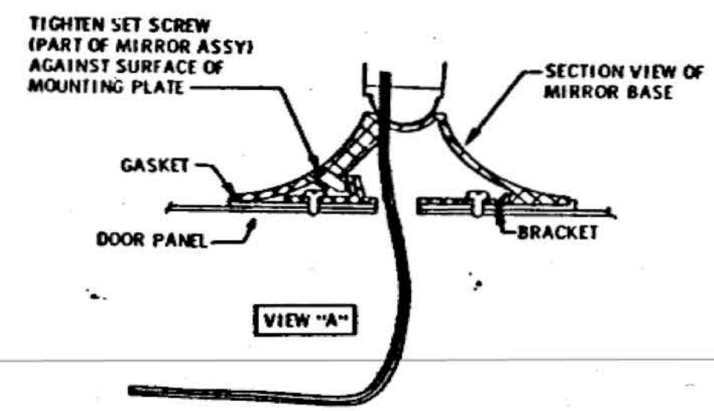

VIEW "A"

REMOTE CONTROL MIRROR (OUTSIDE)

DATE	SYM	REVISION	DR	CK	DATE	SYM	REVISION	DR	CK	DATE	SYM	REVISION	DR.	CK.
										10/2/65	E	VIEWS REVISED		DT
										7/2/65	D	NOTE ADDED		VP
										4/7/65	C	390899-BRACKET REVISED		VP
										5/28/65	B	MIRROR RELOCATED		VP
										4/20/65	A	WAS 380895 BRACKET		VP

INSTALLATION

DATE MAR 5, 1965
DR. BY B. PARKER
CHECKED H. VAN PELT
APPR.
APPR.

MISCELLANEOUS BODY PARTS

FIRST USED 1966

Oldsmobile GRAPHIC ILLUSTRATION

SECTION A

REF. 95D33

PAGE 1-8.3

PART NO. 589998

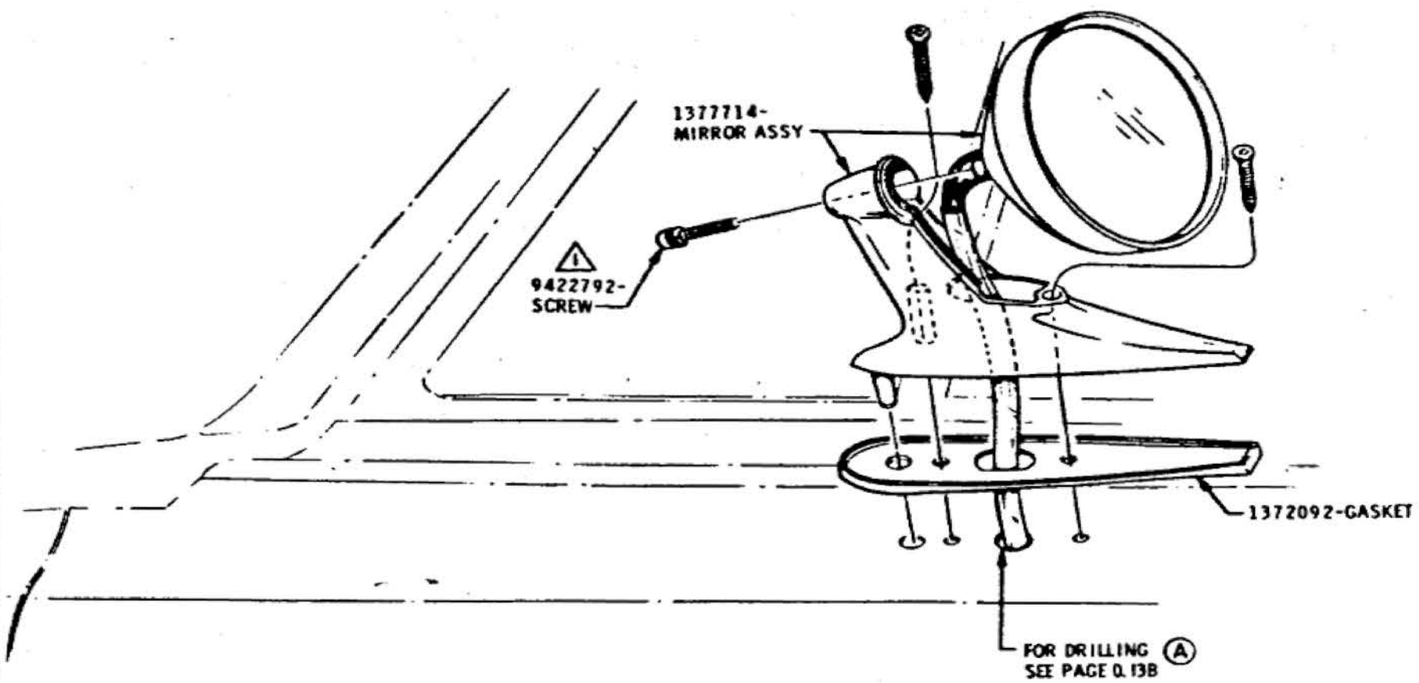

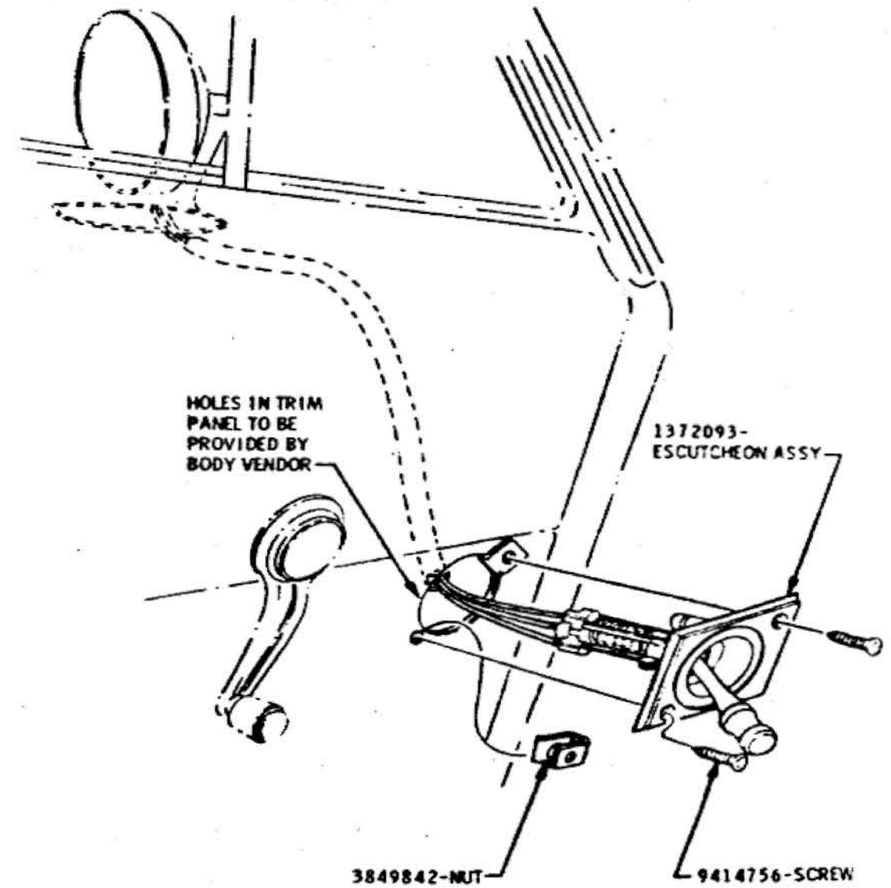

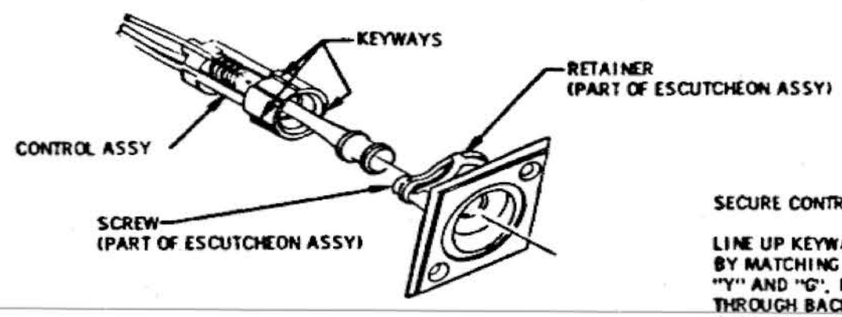

ESCUTCHEON ASSY TO CONTROL ASSY

SECURE CONTROL ASSY TO BACK OF ESCUTCHEON AS FOLLOWS:

LINE UP KEYWAYS ON CONTROL ASSY WITH THE KEYS ON THE RETAINER BY MATCHING RED, YELLOW AND GREEN MARKED CABLES WITH "R", "Y" AND "G", RESPECTIVELY, ON RETAINER. INSERT CONTROL ASSY THROUGH BACK OF ESCUTCHEON AND RETAINER AND TURN COUNTER-CLOCKWISE SLIGHTLY TO POSITION CONTROL, THEN TIGHTEN THE SCREWS WHICH HOLDS RETAINER TO ESCUTCHEON.

⚠ 20-30 LBS IN. Ⓑ

REMOTE CONTROL MIRROR-OUTSIDE (3 CABLE)

DATE	SYM	REVISION	DR.	CK.	DATE	SYM	REVISION	DR.	CK.	DATE	SYM	REVISION	DR.	CK.
										5-20-66	B	TORQUE ADDED		DT
										4-29-66	A	NOTE REVISED		

INSTALLATION	MISCELLANEOUS BODY PARTS		
DATE DEC. 28, 1965	FIRST USED 1966	Oldsmobile Division ILLUSTRATION	PAGE I-8.3A
DR. BY B. PARKER			
CHECKED	SERIES A	REF. 35035	PART NO. 589998
APPR.			
APPR.			

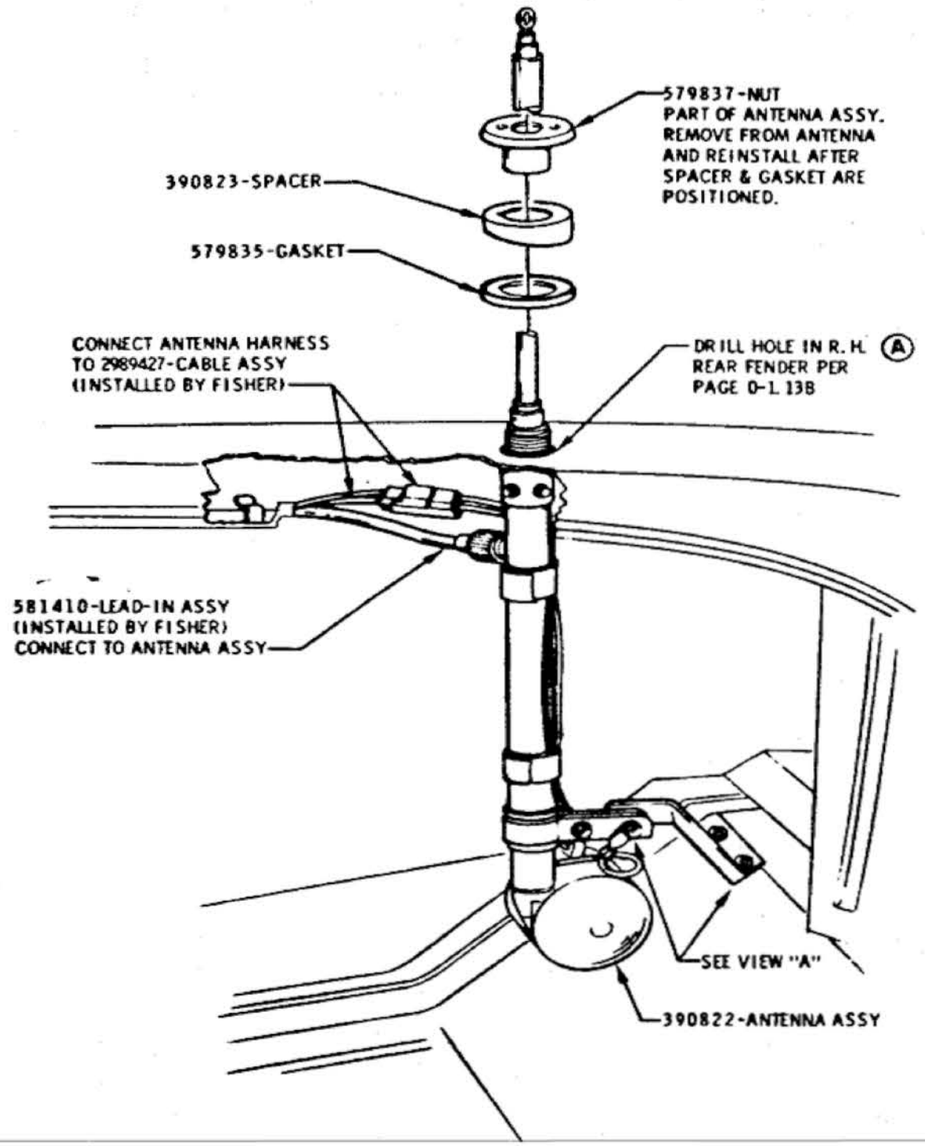

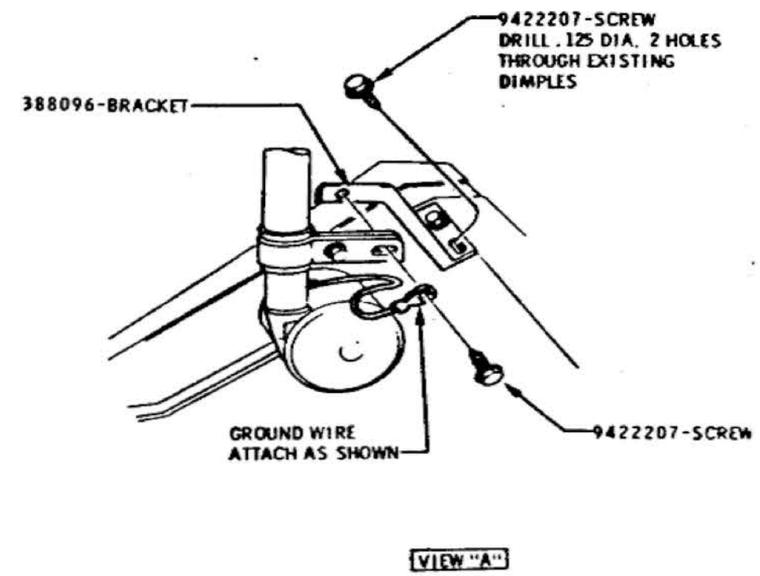

ELECTRIC ANTENNA (EXCEPT STATION WAGON)

DATE	SYM	REVISION	DR.	CK.	DATE	SYM	REVISION	DR.	CK.	DATE	SYM	REVISION	DR.	CK.
										2-24-66	A	NOTE REVISED	JJDT	

INSTALLATION	MISCELLANEOUS BODY PARTS		
DATE FEB. 25, 1965	FIRST USED 1966	Oldsmobile Service ILLUSTRATION	PAGE 1-8.4
DR. BY B. PARKER			
CHECKED H. VAN PELT	SERIES A	REF. 35075	PART NO. 589998
APPR.			
APPR.			

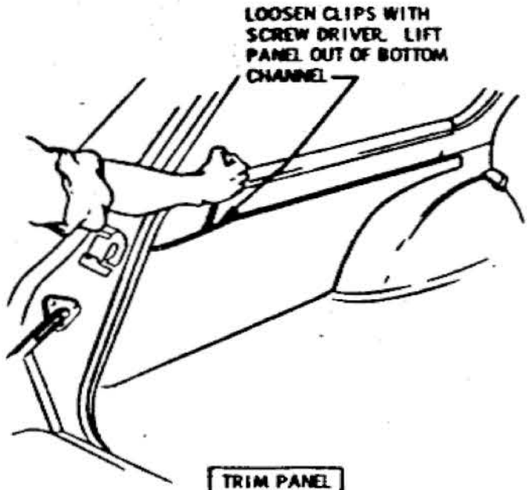

TRIM PANEL REMOVAL

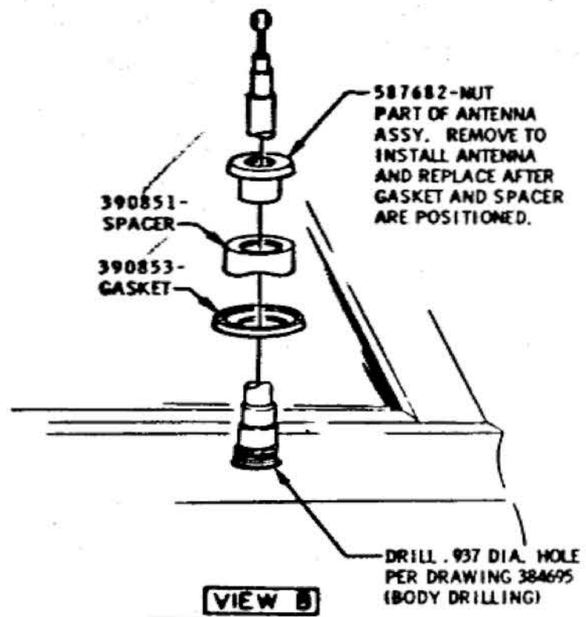

VIEW B

ANTENNA INSTALLATION L.H. QUARTER PANEL

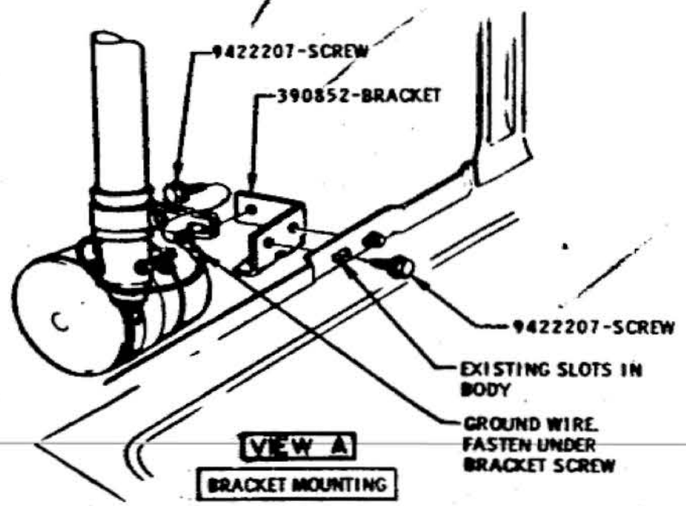

VIEW A

BRACKET MOUNTING

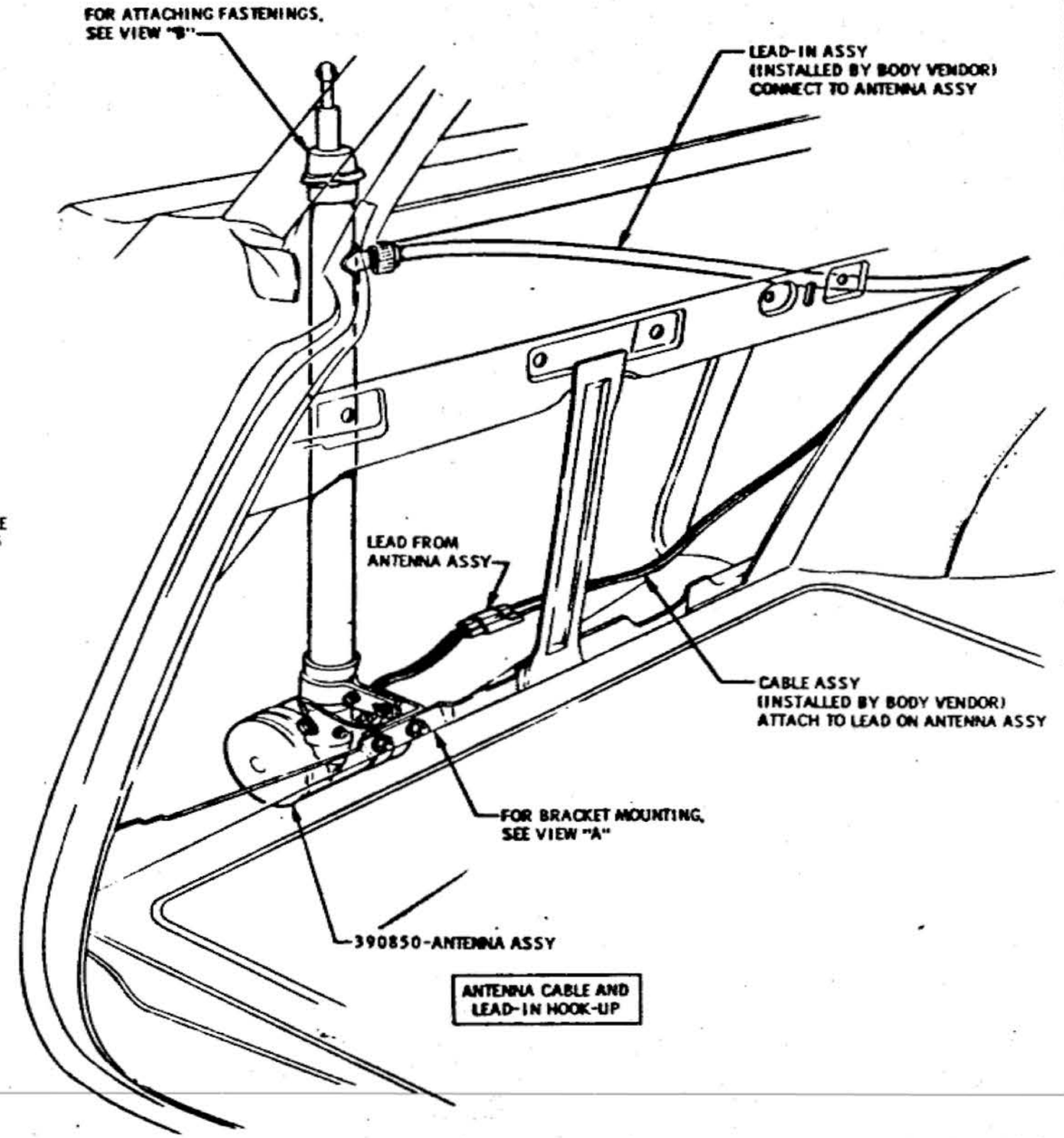

ANTENNA CABLE AND LEAD-IN HOOK-UP

ELECTRIC ANTENNA-STATION WAGONS

DATE	SYM	REVISION	DR.	CK.	DATE	SYM	REVISION	DR.	CK.	DATE	SYM	REVISION	DR.	CK.

INSTALLATION

DATE APR. 13 1966
DR. BY B. PARKER
CHECKED H. VAN PELT
APPR.
APPR.

MISCELLANEOUS BODY PARTS

FIRST USED 1966

Oldsmobile Service ILLUSTRATION

PAGE 1-8.5

SERIES A

REF. REV 45

PART NO. 589998

CAPLUG INSTALLATION

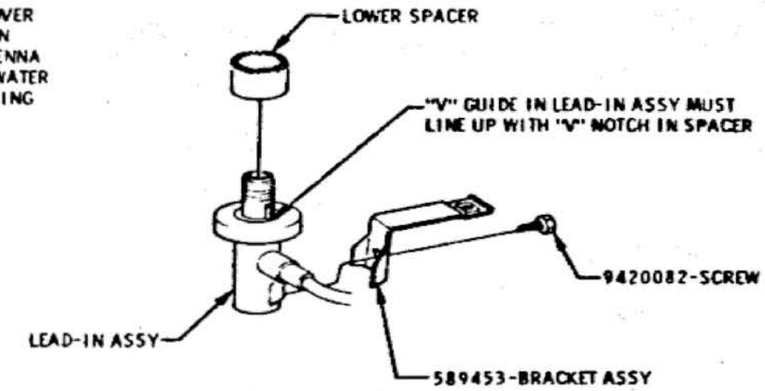

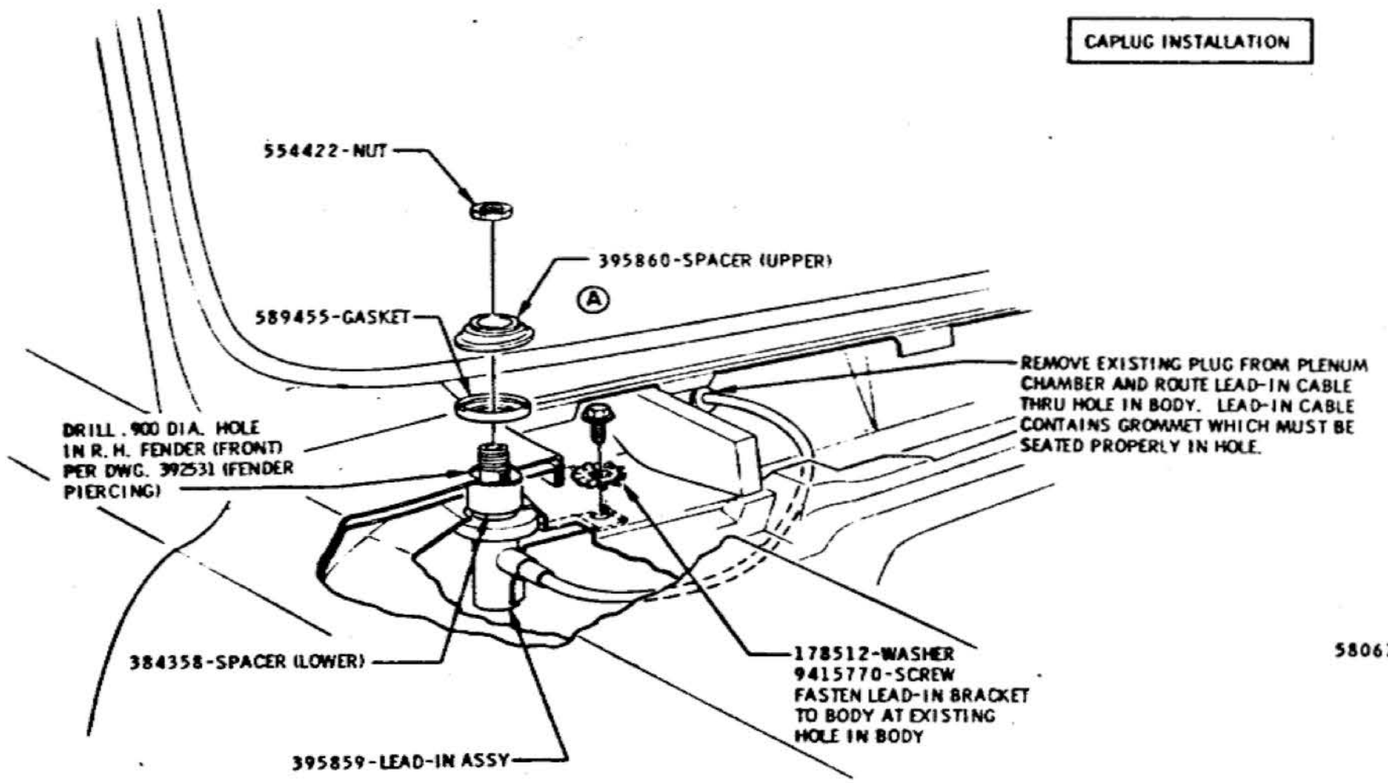

MAST AND LEAD-IN INSTALLATION

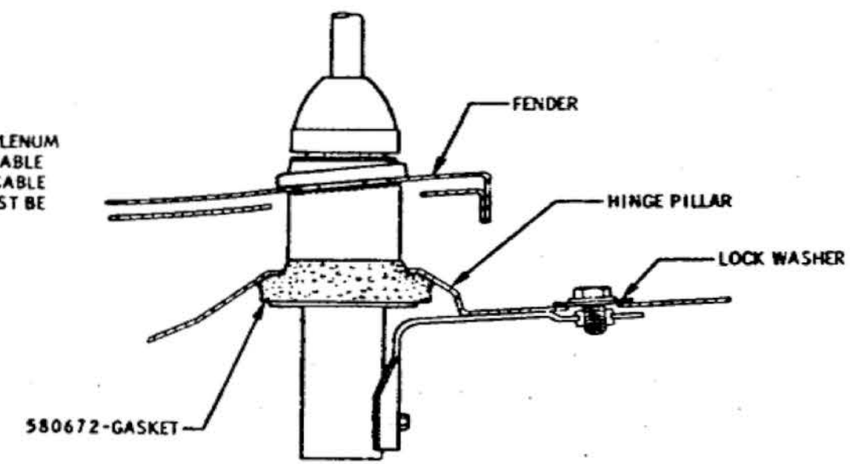

TYPICAL SECTION THRU BODY SHOWING ANTENNA MOUNTING

MANUAL ANTENNA

DATE	SYM	REVISION	DR.	CK.	DATE	SYM	REVISION	DR.	CK.	DATE	SYM	REVISION	DR.	CK.
										5-9-66	A	LEAD-IN, SPACER, HOW NOW REVISED	EP	DT

INSTALLATION **MISCELLANEOUS BODY PARTS**

DATE MAR. 8, 1965
DR. BY B. PARKER
CHECKED H. VAN PELT
APPR.
APPR.

FIRST USED 1966

Oldsmobile Service ILLUSTRATION

SERIES A

REF. 35U63

PAGE 1-8.6

PART NO. 589998

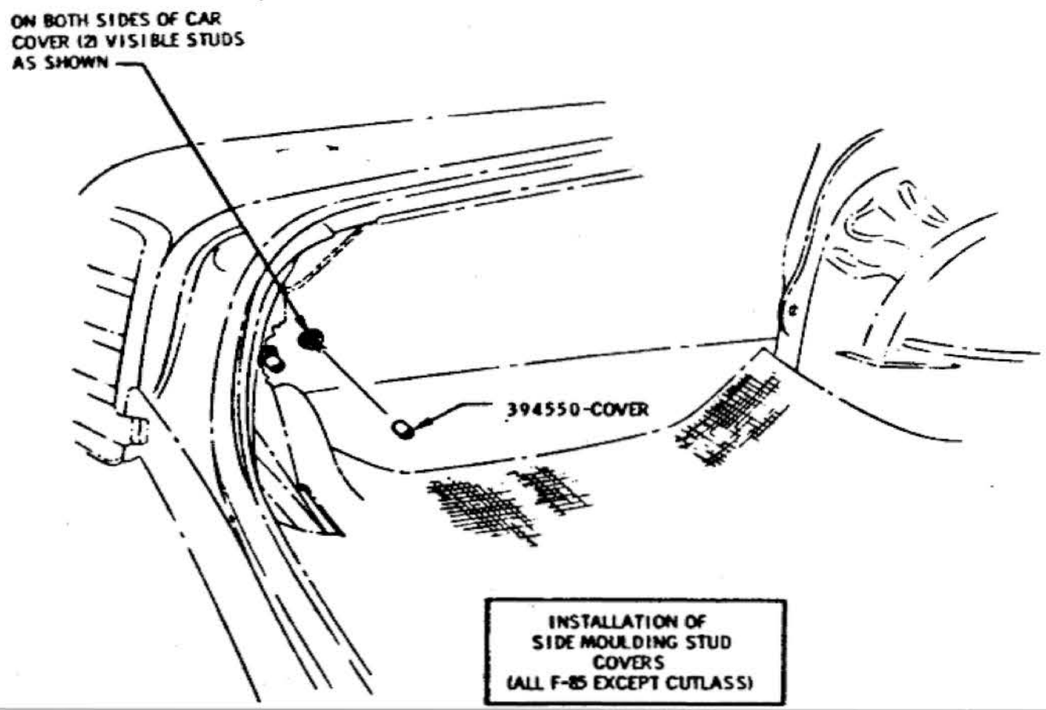

INSTALLATION OF
SIDE MOULDING STUD
COVERS
(ALL F-85 EXCEPT CUTLASS)

L.H. SIDE SHOWN

TRUNK COMPARTMENT MOULDING STUD COVERS

DATE	SYM	REVISION	DR.	CK.	DATE	SYM	REVISION	DR.	CK.	DATE	SYM	REVISION	DR.	CK.

INSTALLATION MISCELLANEOUS BODY PARTS

DATE NOV. 3, 1965
DR. BY C.V. BRACHWAL
CHECKED T.J. [illegible]
APPR. G. NIMIPT
APPR.

FIRST USED 1966

Oldsmobile Service ILLUSTRATION

SERIES A

REF. 1028

PAGE 1-87

PART NO. 589998

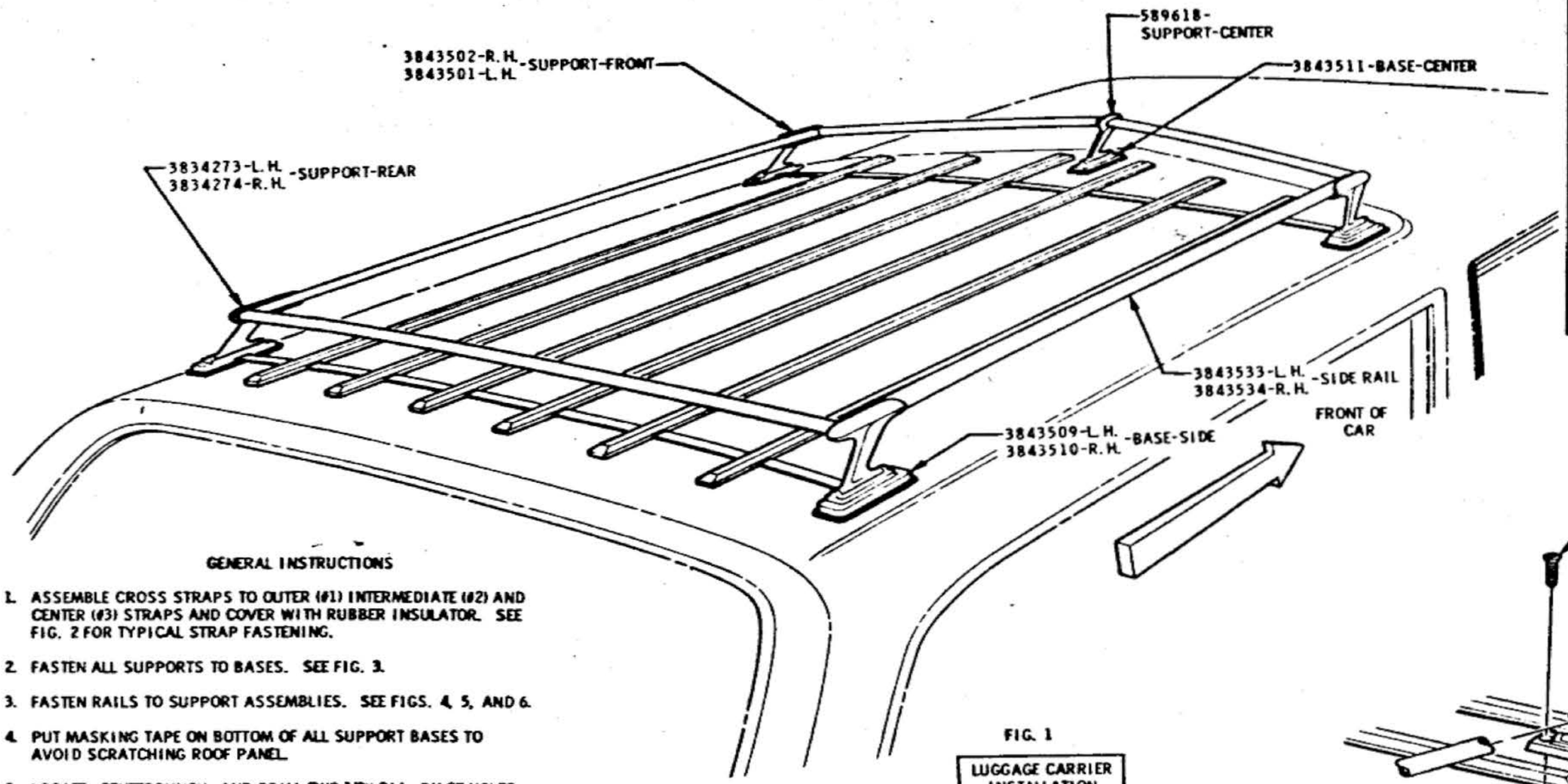

FIG. 1

LUGGAGE CARRIER INSTALLATION

PART NUMBER IDENTIFICATION CHART		
SYM	STRAP	INSULATOR
1	3843513	3843516
2	3843514	3843517
3	3843515	3843518
CROSS STRAP ASSEMBLY		
4	3843519	
FRONT RAIL		
5	3843507 - L.H.	
6	3843508 - R.H.	
REAR RAIL		
7	3843506	

GENERAL INSTRUCTIONS

1. ASSEMBLE CROSS STRAPS TO OUTER (#1) INTERMEDIATE (#2) AND CENTER (#3) STRAPS AND COVER WITH RUBBER INSULATOR. SEE FIG. 2 FOR TYPICAL STRAP FASTENING.
2. FASTEN ALL SUPPORTS TO BASES. SEE FIG. 3.
3. FASTEN RAILS TO SUPPORT ASSEMBLIES. SEE FIGS. 4, 5, AND 6.
4. PUT MASKING TAPE ON BOTTOM OF ALL SUPPORT BASES TO AVOID SCRATCHING ROOF PANEL.
5. LOCATE, CENTERPUNCH, AND DRILL TWO 1/8" DIA. PILOT HOLES FOR FRONT CENTER SUPPORT. THEN DRILL 1/2" DIA. HOLES THRU THE 1/8" DIA. PILOT HOLES. SEE FIG. 7. BE SURE TO USE A STOP ON THE DRILL TO PREVENT PIERCING THE HEADLINING. DE-BURR ALL HOLES.
6. PLACE CENTER GASKET OVER HOLES IN PANEL AND INSERT NUTS. PLACE RAIL ASSEMBLY ON ROOF PANEL AND FASTEN FRONT CENTER SUPPORT SEMI-TIGHT. ADJUST RAIL ASSEMBLY ON ROOF PANEL SO THAT THE SUPPORT BASES ARE EQUI-DISTANT FROM CENTER OF CAR.
7. TAPE BASES IN THIS POSITION AND SCRIBE HOLE LOCATIONS ON ROOF PANEL, AND REMOVE RAIL ASSEMBLY FROM ROOF.
8. CENTERPUNCH AND DRILL 1/8" DIA. PILOT HOLES THROUGH EACH SCRIBED HOLE AND ENLARGE HOLES TO 1/2" DIA.
9. POSITION REMAINING GASKETS OVER ALL HOLES AND INSERT NUTS THROUGH GASKETS INTO HOLES IN ROOF PANEL.
10. ASSEMBLE RAIL ASSEMBLY TO RACK ASSEMBLY, SEE FIG. 8.
11. CAREFULLY PLACE THE LUGGAGE CARRIER OVER THE GASKETS ON THE ROOF PANEL AND FASTEN CARRIER TO ROOF PANEL.

NOTE: USE LIGHT PRESSURE ON SCREWS UNTIL THREADS ENGAGE IN THE NUT TO AVOID PUSHING NUT THROUGH ROOF PANEL.

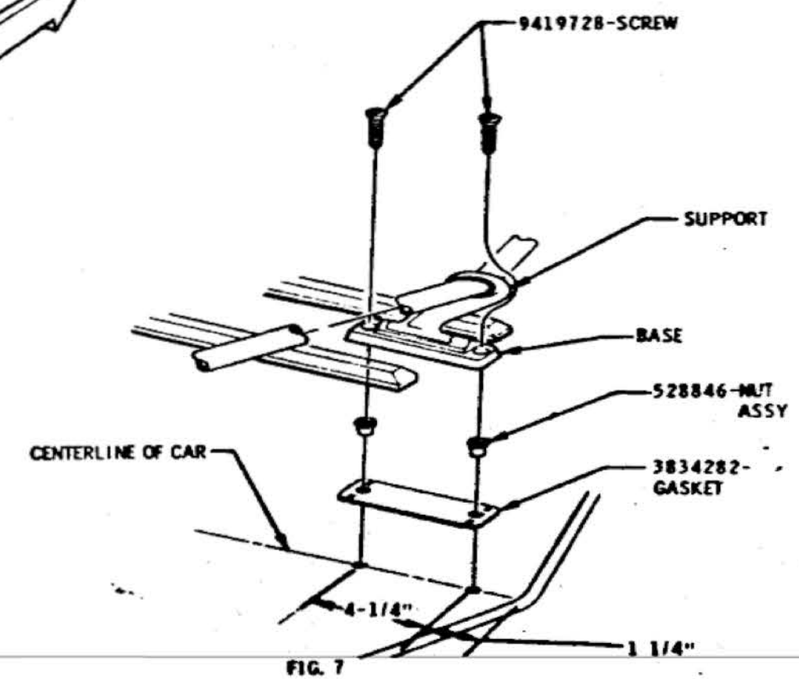

FIG. 7

FASTENING CENTER SUPPORT AND BASE TO ROOF

LUGGAGE CARRIER

DATE	SYM	REVISION	DR.	CK.	DATE	SYM	REVISION	DR.	CK.	DATE	SYM	REVISION	DR.	CK.

INSTALLATION MISCELLANEOUS BODY PART

DATE MAR. 3, 1965
DR. BY R.K. BEACHNAU
CHECKED H. VAN PELT
APPR.
APPR.

FIRST USED 1966

Oldsmobile Division General Motors Corporation

SERIES A

REF.

PAGE 1-8.8

PART NO. 589998

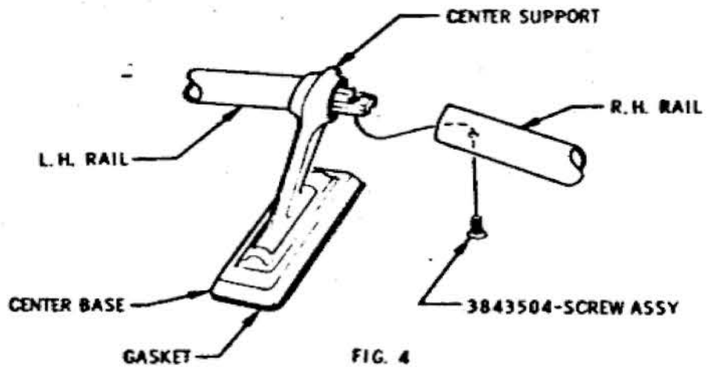

FIG. 4

TYPICAL FASTENING CENTER SUPPORT TO RAILS

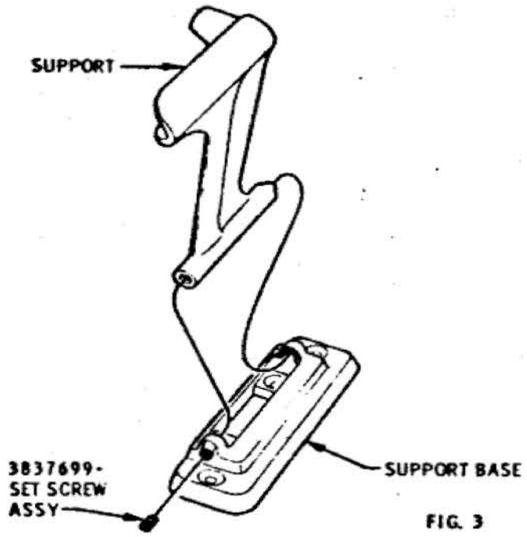

FIG. 3

TYPICAL SUPPORT AND BASE FASTENING

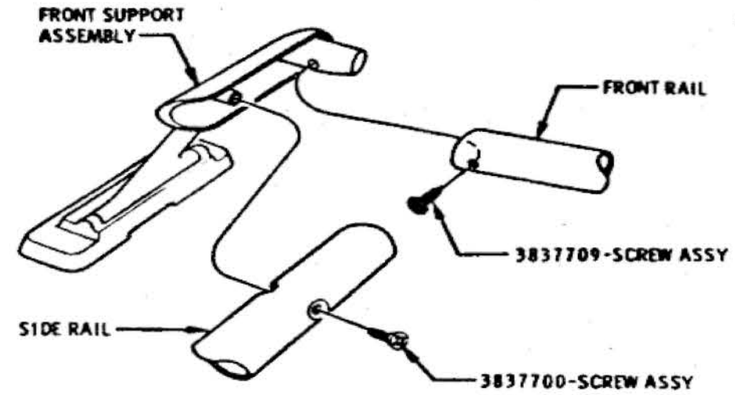

FIG. 5

TYPICAL FASTENING FRONT SUPPORT TO RAILS

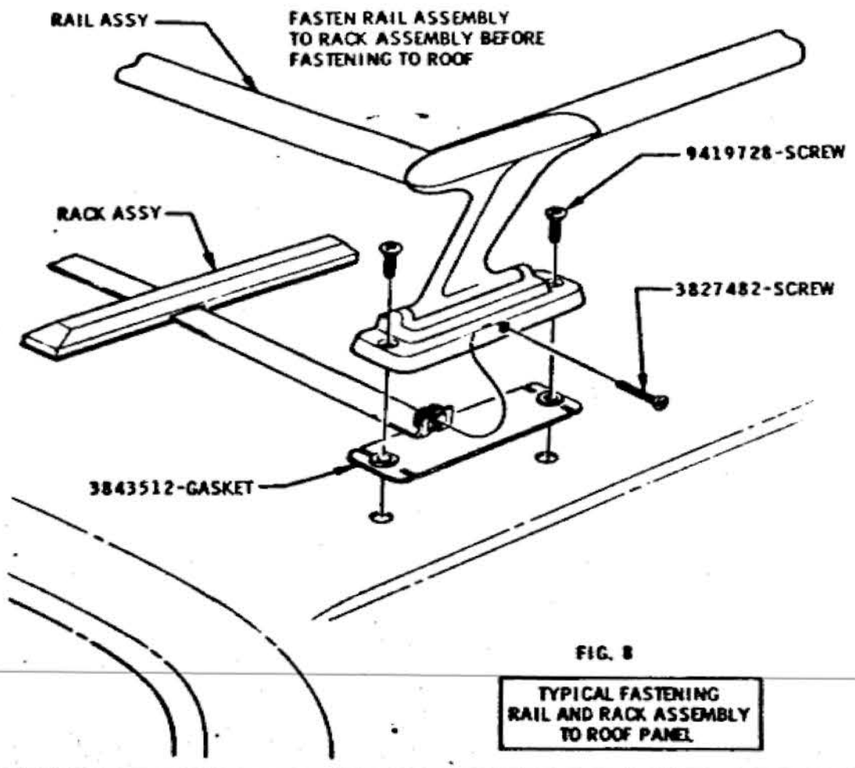

FIG. 8

TYPICAL FASTENING RAIL AND RACK ASSEMBLY TO ROOF PANEL

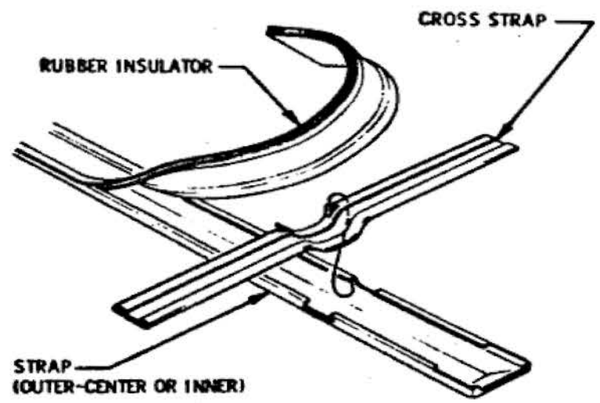

FIG. 2

TYPICAL STRAP FASTENING

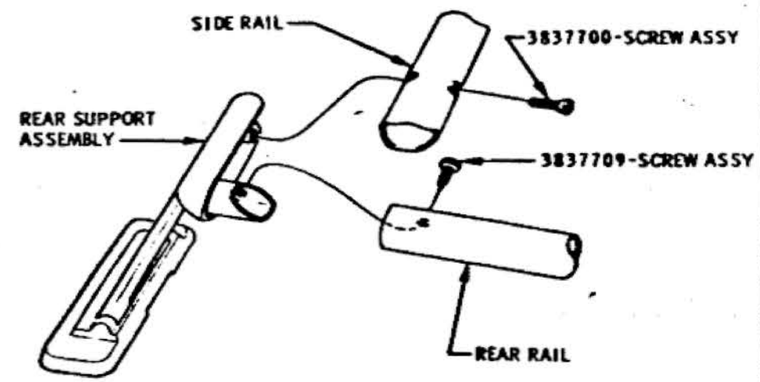

FIG. 6

TYPICAL FASTENING REAR SUPPORT TO RAILS

LUGGAGE CARRIER

DATE	SYM	REVISION	DR.	CK.	DATE	SYM	REVISION	DR.	CK.	DATE	SYM	REVISION	DR.	CK.

INSTALLATION MISCELLANEOUS BODY PARTS

DATE FEB. 26, 1965
DR. BY C.K. BEACHNAU
CHECKED H. VAN PELT
APPR.
APPR.

FIRST USED 1966

Oldsmobile Service ILLUSTRATION

SERIES A

REF. 85V55

PAGE I-8.9

PART NO. 589998

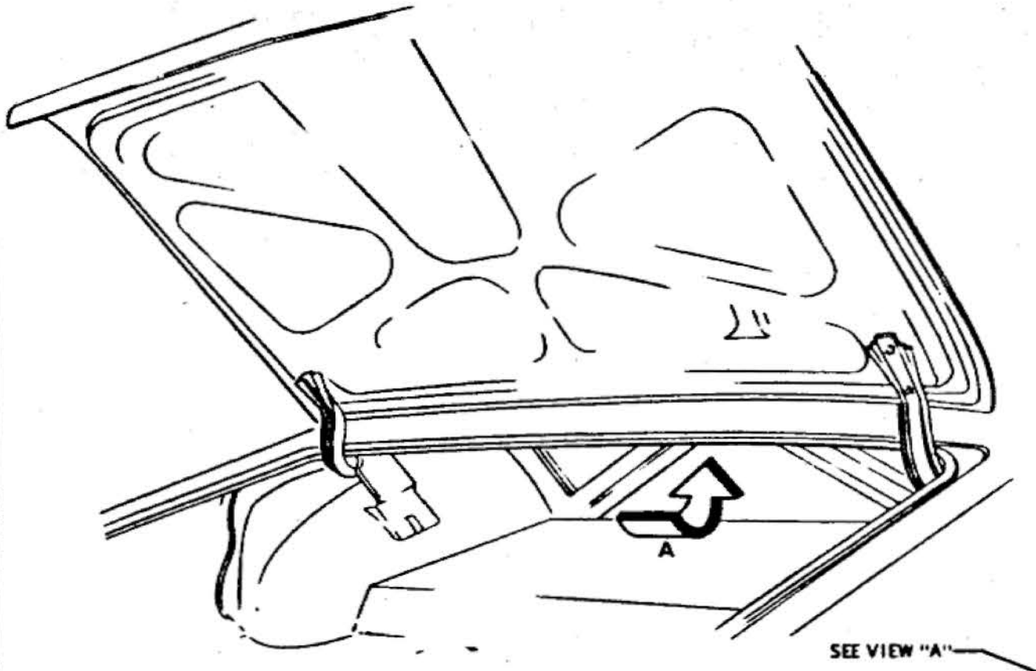

SEE VIEWS IN DIRECTION OF ARROW

PUSH "T" BOLT UP THROUGH EXISTING HOLE IN THE BOTTOM OF THE PACKAGE SHELF, AGAINST THE SPRING RETAINER, AND SLIDE BOLT INTO THE SQUARE PORTION OF THE HOLE WHERE IT WILL RETAIN ITSELF.

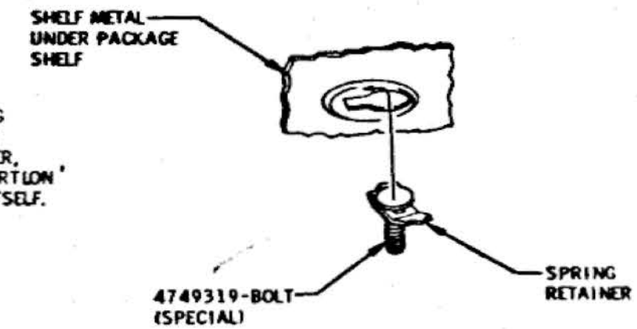

VIEW A

"T" BOLT INSTALLATION

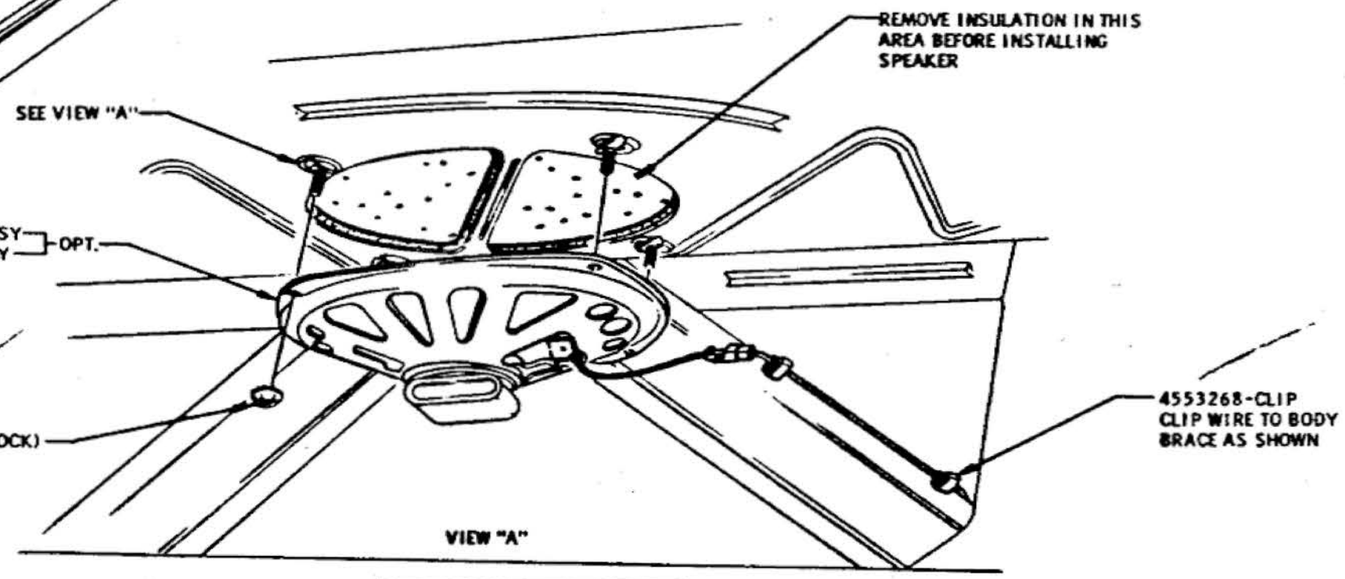

SPEAKER INSTALLATION FOR MODELS WITH WOVEN FABRIC (CHICKAPEE CLOTH) OVER PACKAGE SHELF SEDANS ONLY

REAR SEAT SPEAKER

DATE	SYM	REVISION	DR.	CK.	DATE	SYM	REVISION	DR.	CK.	DATE	SYM	REVISION	DR.	CK.

INSTALLATION — MISCELLANEOUS BODY PARTS

DATE MAR. 8, 1965
DR. BY B. PARKER
CHECKED H. VAN PELT
APPR.
APPR.

FIRST USED 1966 — Oldsmobile Service ILLUSTRATION — PAGE 3-8.10

SERIES A — REF. 35063 35090 — PART NO. 589998

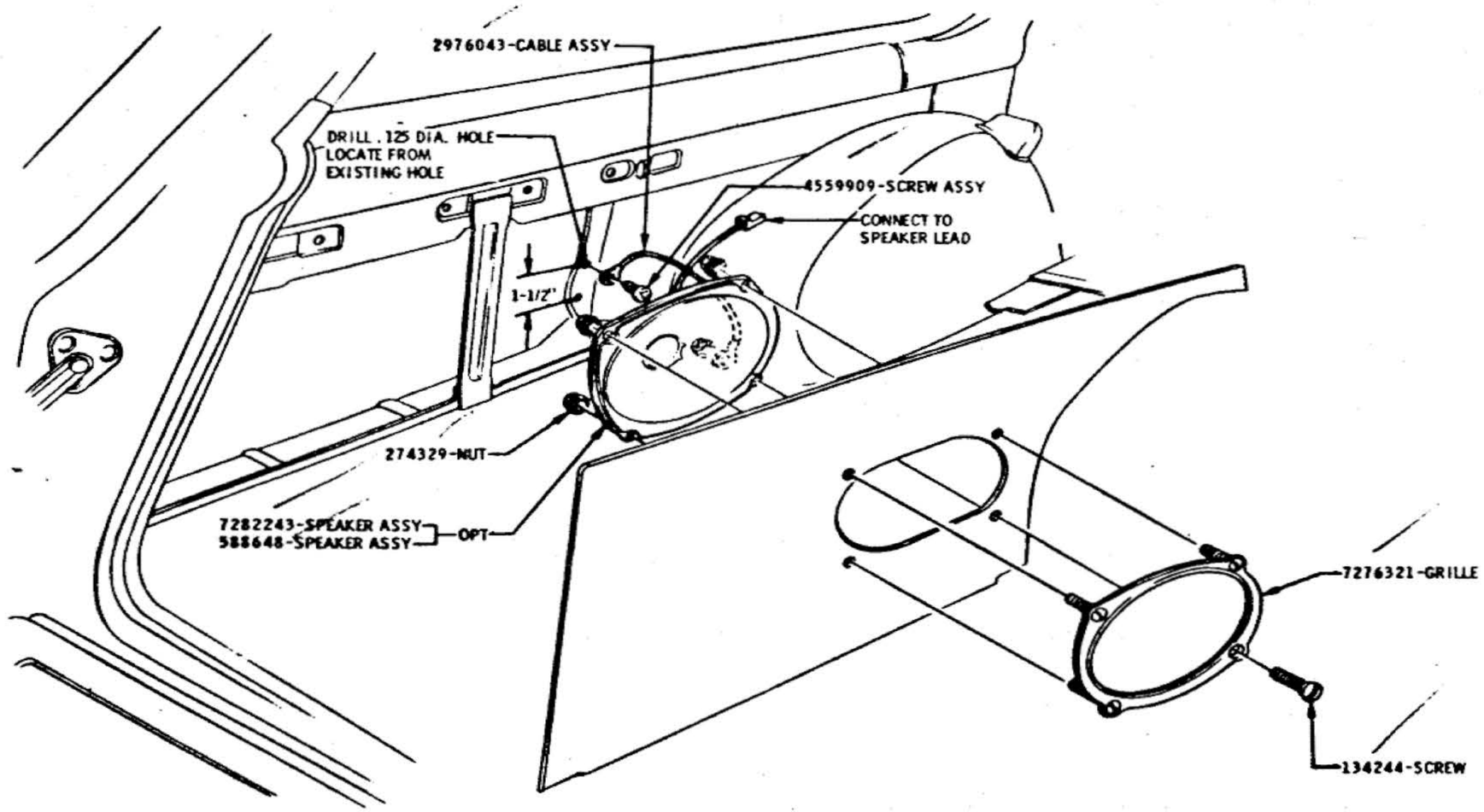

INSTALLATION OF SPEAKER PARTS

REAR SEAT SPEAKER (STATION WAGON)

DATE	SYM	REVISION	DR.	CK.	DATE	SYM	REVISION	DR.	CK.	DATE	SYM	REVISION	DR.	CK.

INSTALLATION	MISCELLANEOUS BODY PARTS		
DATE MAR. 12, 1965	FIRST USED 1966	Oldsmobile Service ILLUSTRATION	PAGE 1-8.11
DR. BY B. PARKER			
CHECKED H. VAN PELT	REVISION A	REF. 36U80	PART NO. 589998
APPR.			
APPR.			

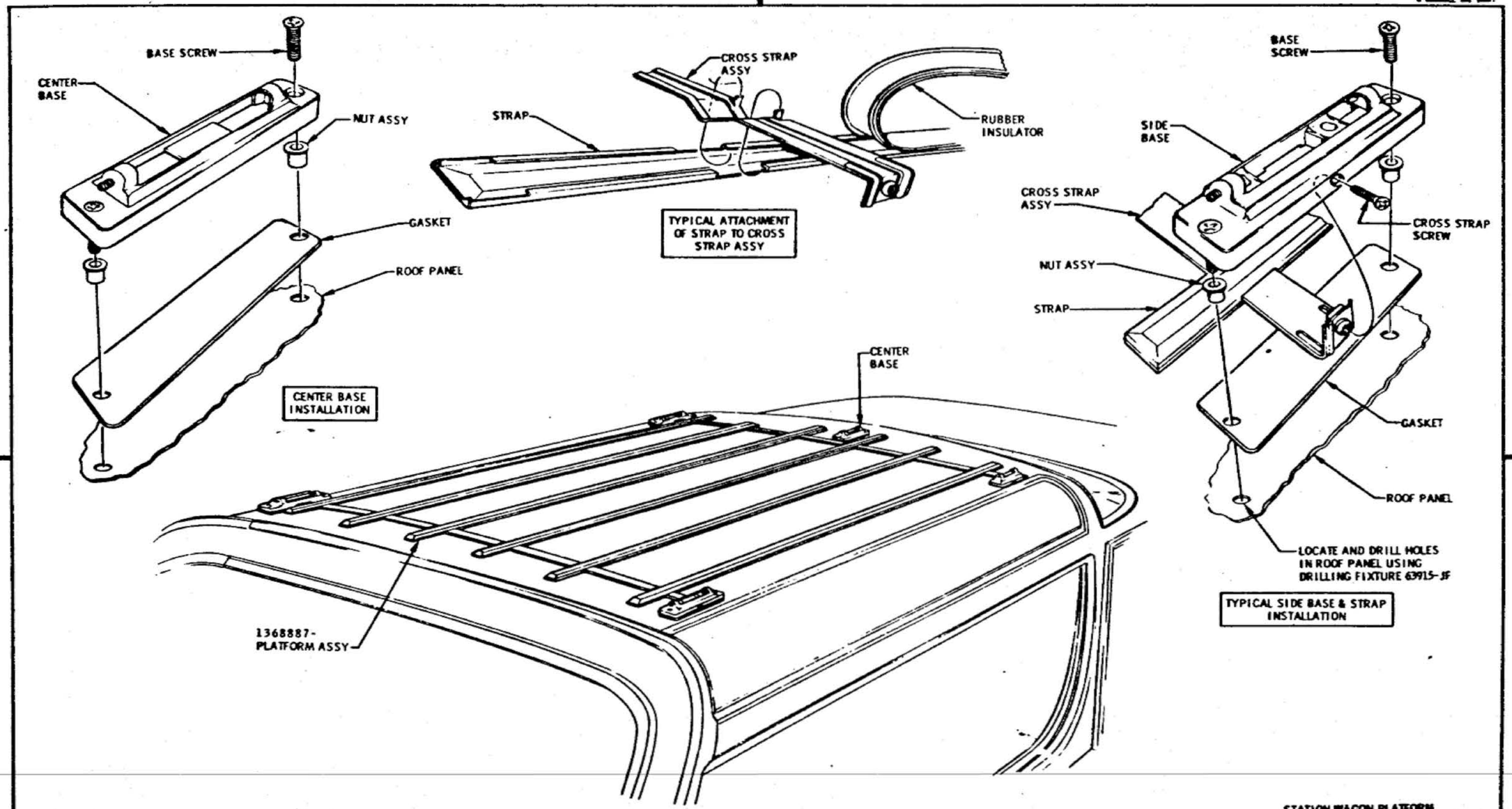

STATION WAGON PLATFORM

DATE	SYM	REVISION	DR.	CK.	DATE	SYM	REVISION	DR.	CK.	DATE	SYM	REVISION	DR.	CK.

INSTALLATION **MISCELLANEOUS BODY PARTS**

DATE APRIL 26, 1965
DR. BY B. PARKER
CHECKED H. VAN PELT
APPR.
APPR.

FIRST USED 1966 — Oldsmobile Graphic Illustration

SERIES A — DIV. 35U55 — PART NO. 589998

PAGE 1-8.12

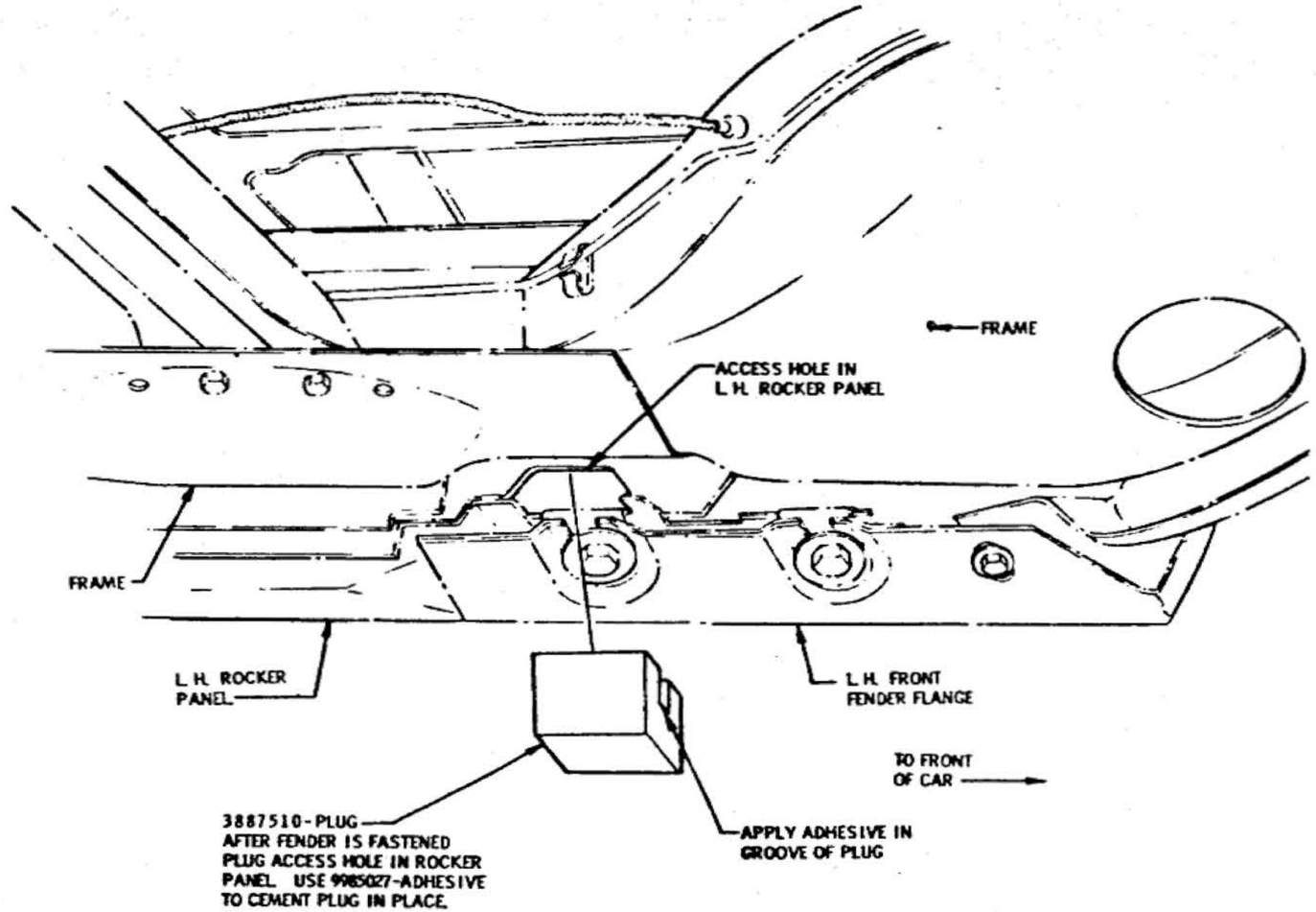

VIEW A

ACCESS HOLE IN L.H. ROCKER PANEL
(RIGHT HAND OPPOSITE)

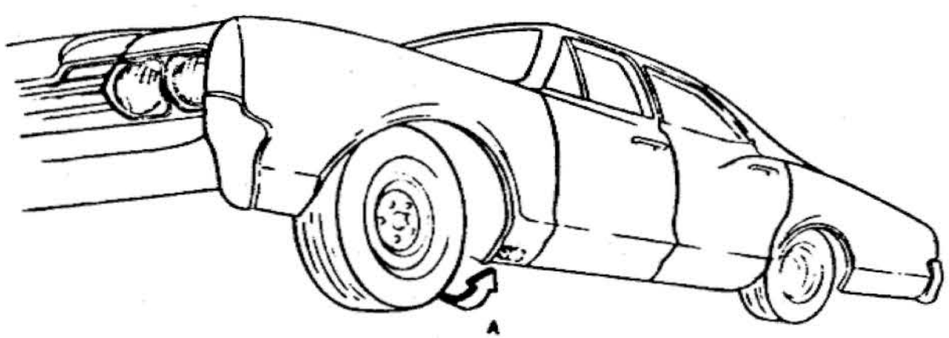

ROCKER PANEL ACCESS HOLE PLUG

DATE	SYM	REVISION	DR.	CK.	DATE	SYM	REVISION	DR.	CK.	DATE	SYM	REVISION	DR.	CK.

INSTALLATION: MISCELLANEOUS BODY PARTS

DATE: JUNE 28, 1965
DR. BY: B. PARKER
CHECKED: TJVA
APPR.: TWT
APPR.:

FIRST USED: 1966
Oldsmobile Graphic Illustration
SERIES: A
REF.: 1A2E
PAGE: 1-8.13
PART NO.: 589998

OLDSMOBILE PRODUCT INFORMATION MANUAL

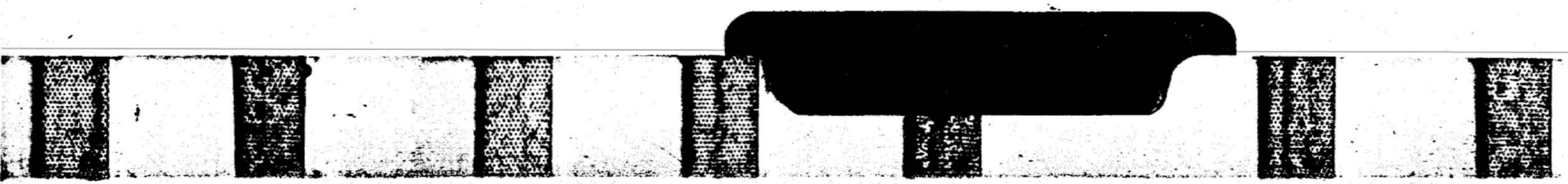

1- INSIDE OF CAR

GROUP 1- INSIDE OF CAR

TOE PAN INSULATORS, DIMMER SWITCH AND ACC. STUDS----------1-2.1
AIR CONDITIONING FLOOR INSULATORS----------1-2.2
FLOOR CARPET AND ACCELERATOR PEDAL----------1-2.3
STANDARD HEATER----------1-2.4
AIR CONDITIONING HEATER----------1-2.5
DEFROSTER OUTLET TO INSTR. PANEL & HEATER----------1-2.5A
A/C MANIFOLD ASSY TO HEATER----------1-2.6
A/C RH SHROUD PANEL & END AIR OUTLET----------1-2.7
L-6 THROTTLE CONTROL----------1-2.8
1-2.9
1-2.10
1-2.11
1-2.12
1-2.13
1-2.14
INSIDE REAR VIEW MIRROR----------1-2.15

VISOR VANITY MIRROR ---------- 1-2.16
1-2.17
1-2.18
1-2.19
SM CONSOLE-PANEL, SEAL AND MOULDING TO CONSOLE ---------- 1-2.20
SM CONSOLE-GLOVE BOX TO CONSOLE ---------- 1-2.21
SM CONSOLE-VACUUM GAGE ---------- 1-2.22
SM CONSOLE-CONSOLE TO FLOOR ---------- 1-2.23
JT CONSOLE-WIRING HARNESS TO NEUTRAL SAFETY SWITCH ---------- 1-2.24
JT CONSOLE-GAGE PANEL, PAD AND HARNESS TO CONSOLE ---------- 1-2.25
JT CONSOLE-CONTROL PANEL TO CONSOLE ---------- 1-2.26
JT CONSOLE-GLOVE BOX DOOR, MOULDINGS AND LAMPS ---------- 1-2.27
JT CONSOLE-CONSOLE TO MOUNTING BRACKETS ---------- 1-2.28
JT CONSOLE-CARPET CEMENTING TO CONSOLE ---------- 1-2.29

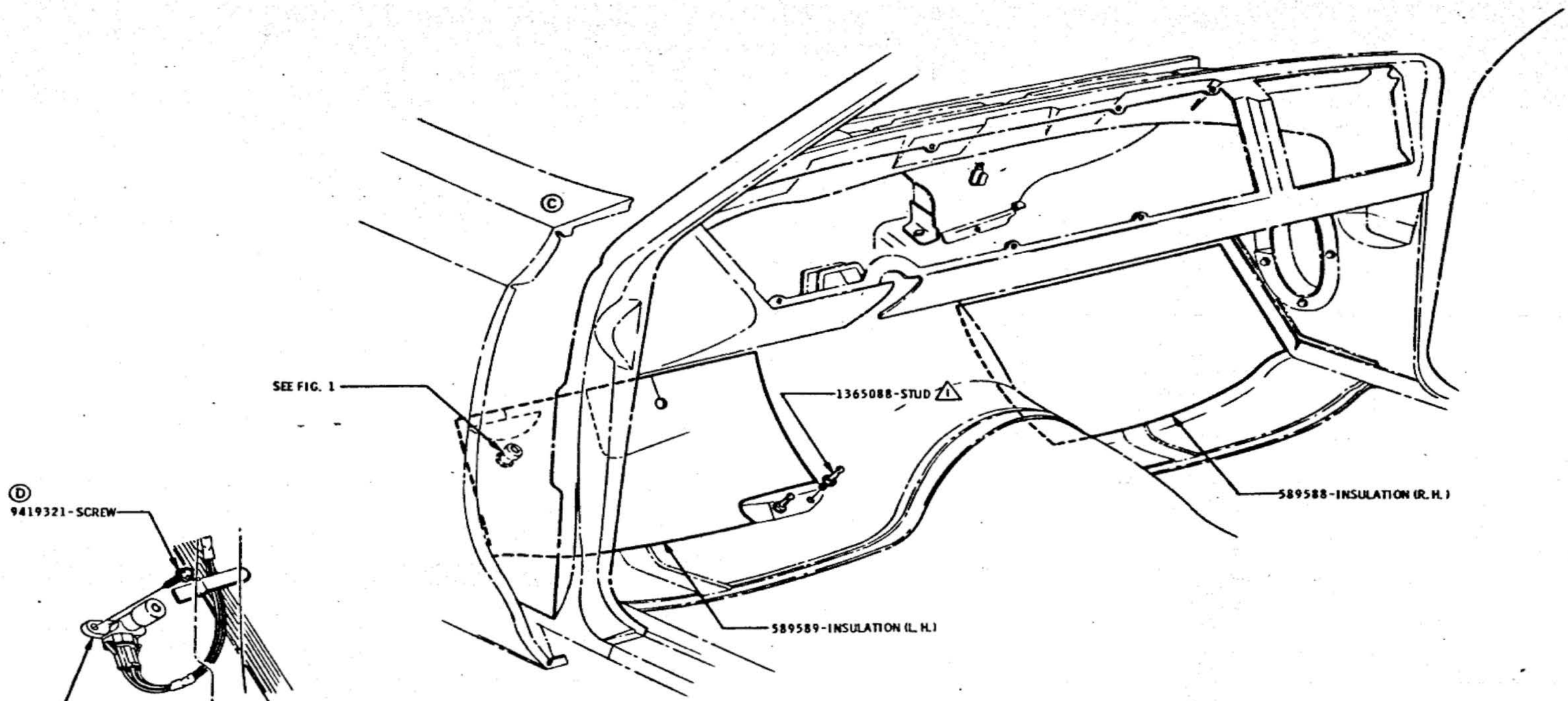

FIGURE 1

TOE PAN INSULATORS, DIMMER SWITCH & ACC. STUDS

DATE	SYM	REVISION	DR.	CK.	DATE	SYM	REVISION	DR.	CK.	DATE	SYM	REVISION	DR.	CK.
										9-17-65	D	WAS 9422207-SCREW	CM	DT
										6-1-65	C	VIEW REMOVED	CG	VD
										4-6-65	B	TORQUE ADDED	[illegible]	[illegible]
										3-23-65	A	CLIP LOCATION VIEW ADDED	JS	VP

INSTALLATION **INSIDE OF CAR**

DATE MAR. 8, 1965
DR. BY C. K. BEAUMAN
CHECKED H. VAN PELT
APPR. D. J. [illegible]
APPR.

PART GRP. 1966 — Oldsmobile Service ILLUSTRATION — PAGE 1-2.1

SERIES A — REF. 12 C 6 N2 1A2E — PART NO. 589998

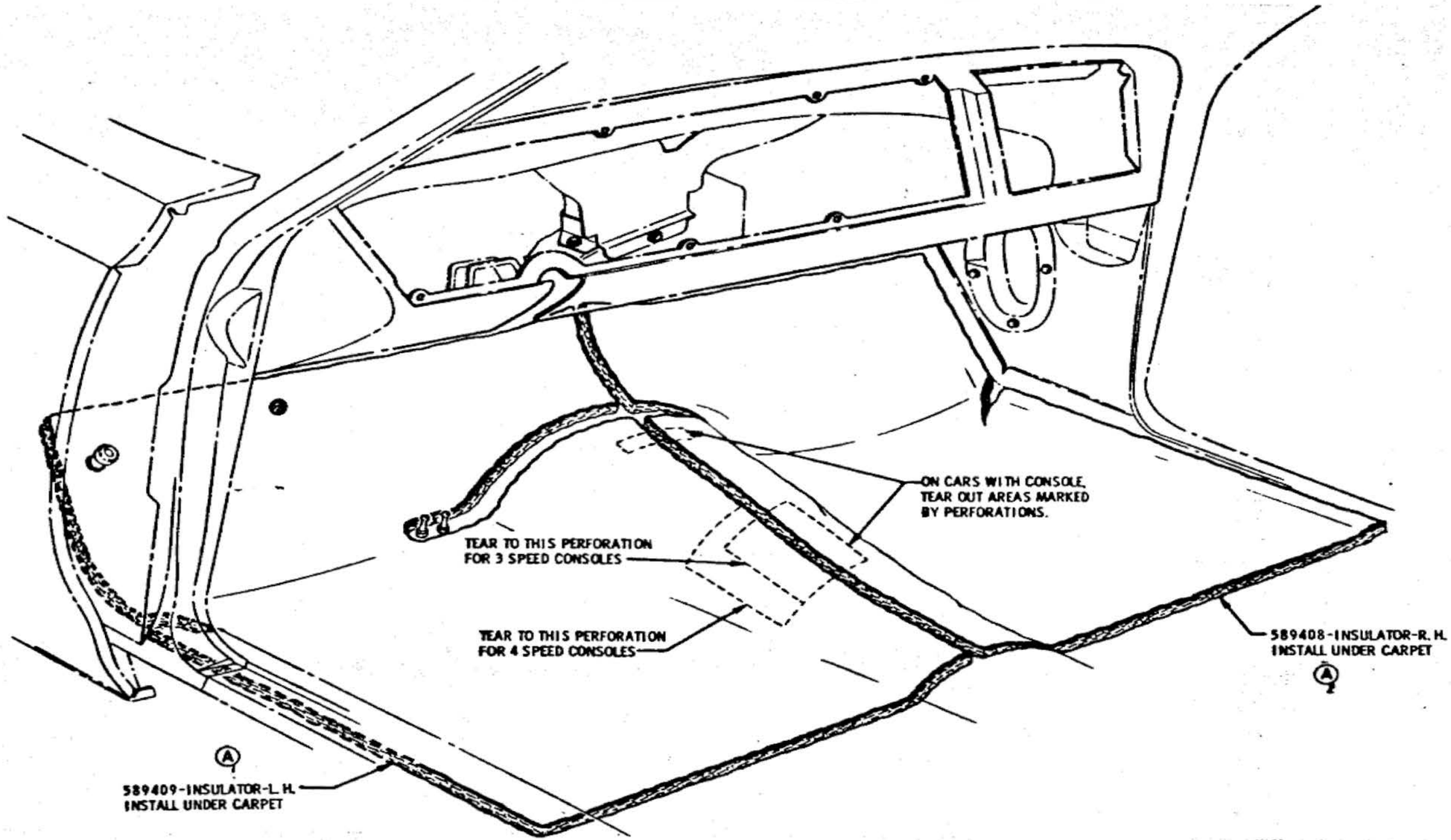

AIR CONDITIONING FLOOR INSULATORS

DATE	SYM	REVISION	DR.	CK.	DATE	SYM	REVISION	DR.	CK.	DATE	SYM	REVISION	DR.	CK.
										7-21-65	A2	NOTE REVERSED	CG	VP

INSTALLATION INSIDE OF CAR

DATE MAR. 5. 1965
DR. BY C.V. BEACHNAU
CHECKED H. VAN PELT
APPR. K.E. Mahlke
APPR.

FIRST USED 1966

Oldsmobile GENERAL ILLUSTRATION

PAGE 1-2.2

SERIES A

REF. 95C60

PART NO. 589998

OLDSMOBILE DIVISION GENERAL MOTORS CORPORATION LANSING — MICHIGAN

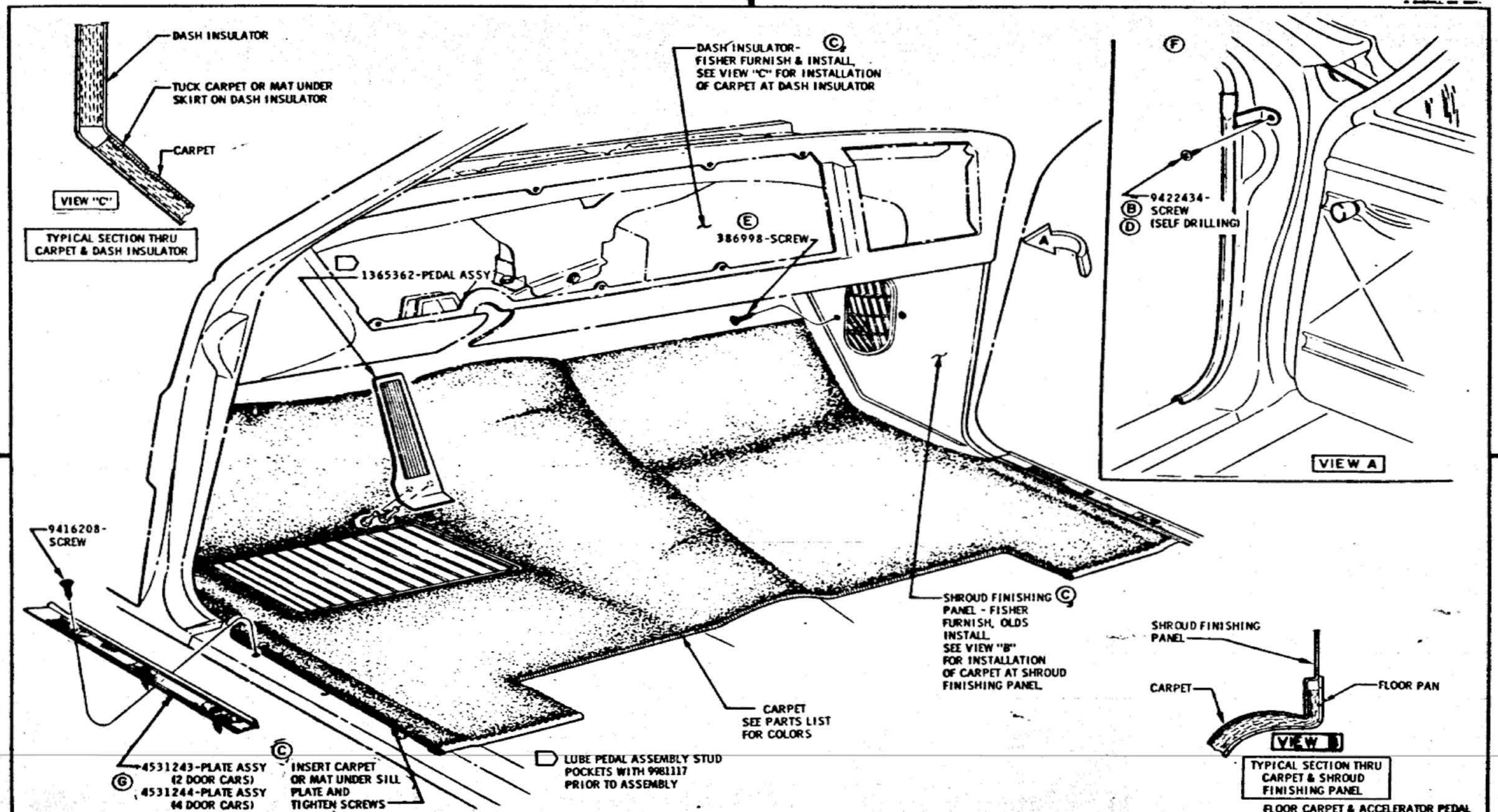

FLOOR CARPET & ACCELERATOR PEDAL

DATE	SYM	REVISION	DR.	CK.	DATE	SYM	REVISION	DR.	CK.	DATE	SYM	REVISION	DR.	CK.
										7-15-65	E	PART NO. ADDED	JJ	VP
										6-8-65	D	PART 9421977 SCREW	JJ	VP
										4-2-65	C	NOTES ADDED	JJ	VP
					8-4-65	G	PART NO'S REVISED	JJ	VP	4-2-65	B	WAS 9421997 SCREW	JJ	VP
					7-28-65	F	NOTE REMOVED	JJ	VP	4-6-65	A	LUBE NOTE ADDED	CG	VP

INSTALLATION **INSIDE OF CAR**

DATE MAR. 8, 1965
DR. BY C. K. BEAUCHAMP
CHECKED H. VAN PELT
APPR. G. BILLART

FIRST USED 1966 — Oldsmobile Service ILLUSTRATION

SERIES A — REF. 6A1 1A1

PAGE 1-2.3

PART NO. 589998

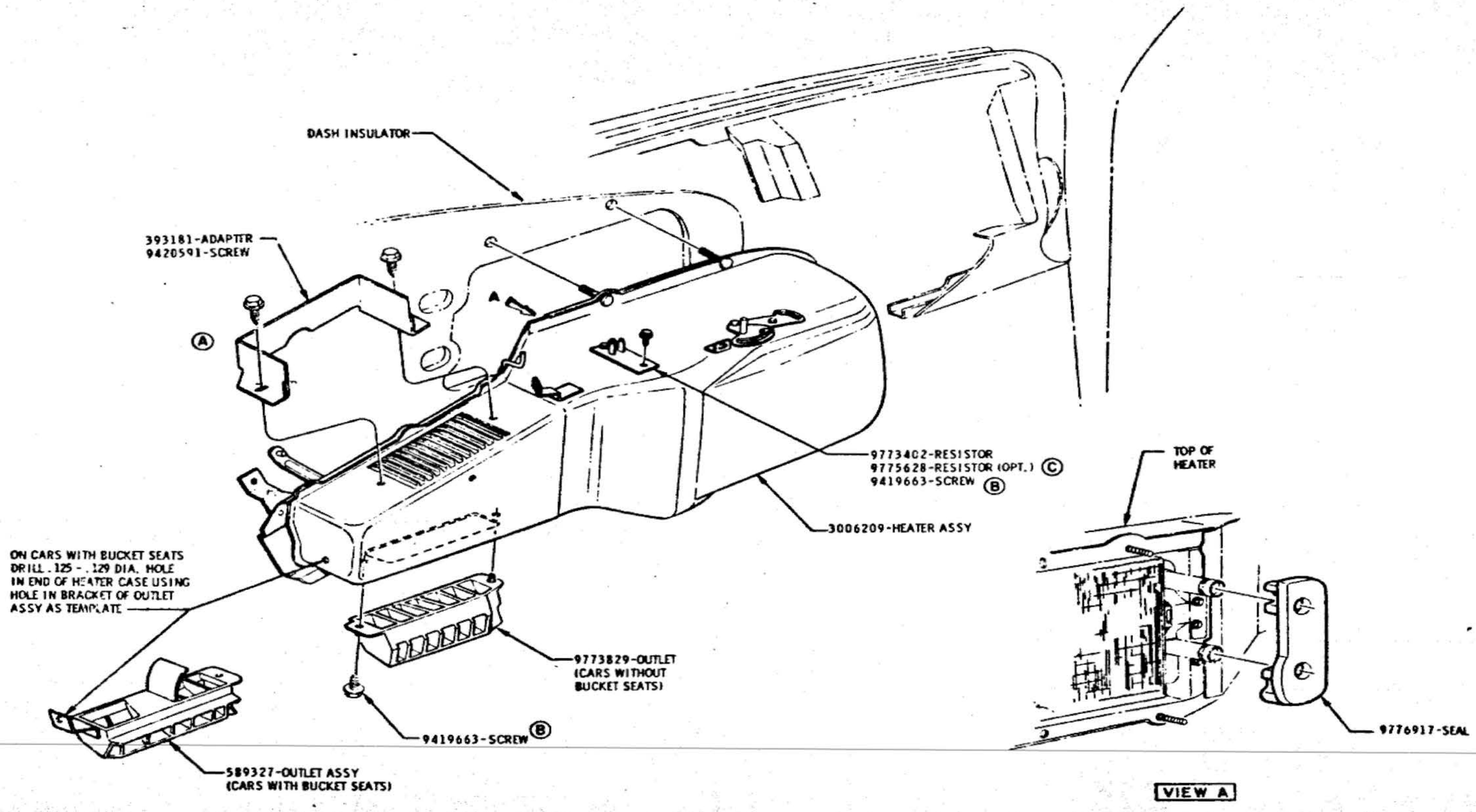

STANDARD HEATER

DATE	SYM	REVISION	DR.	CK.	DATE	SYM	REVISION	DR.	CK.	DATE	SYM	REVISION	DR.	CK.
										12-2-65	C	RESISTOR OPT. ADDED		DT
										8-20-65	B	WAS 9419303 SCREW		VP
										5-14-65	A	NEW ADDED		VP

INSTALLATION **INSIDE OF CAR**

DATE MAR. 12, 1965
DR. BY C.V. BEACHNAU
CHECKED H VAN PELT
APPR.
APPR.

FIRST USED 1966

Oldsmobile Graphic Illustration

SECTION A

REF. 1A2C

PAGE 1-2.4

PART NO. 589998

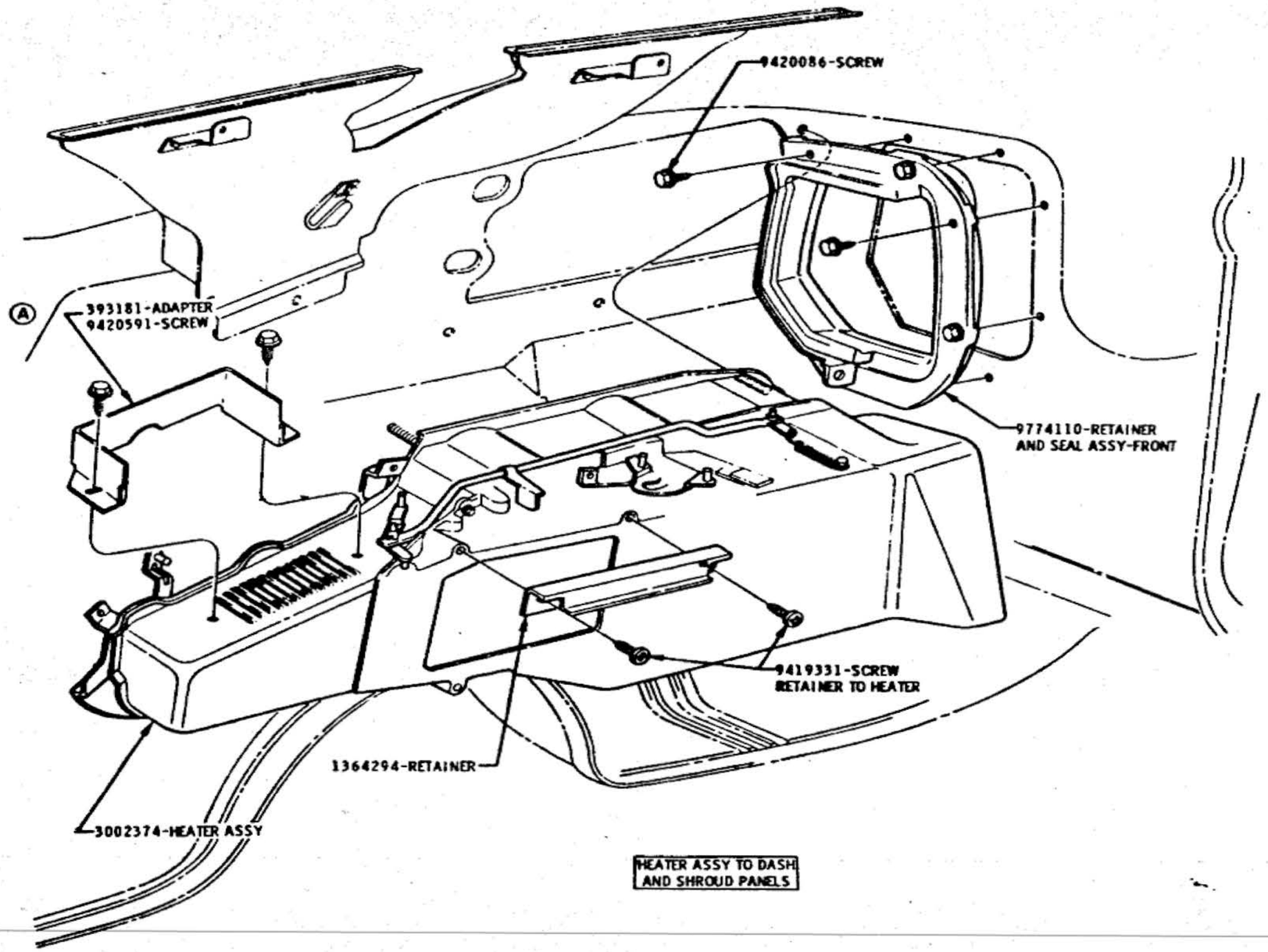

HEATER ASSY TO DASH AND SHROUD PANELS

AIR CONDITIONING HEATER

DATE	SYM	REVISION	DR.	CK.	DATE	SYM	REVISION	DR.	CK.	DATE	SYM	REVISION	DR.	CK.
										7-21-65	B	REDRAWN		
										5-14-65	A	VIEW ADDED		

INSTALLATION INSIDE OF CAR

DATE MAR. 8. 1965
DR. BY C. A. BEACHNAK
CHECKED N. VAN PELT
APPR.
APPR.

FIRST USED 1966 — Oldsmobile Graphic Illustration — PAGE 1-2.5

SERIES A — REV. 35C60 — PART NO. 589998

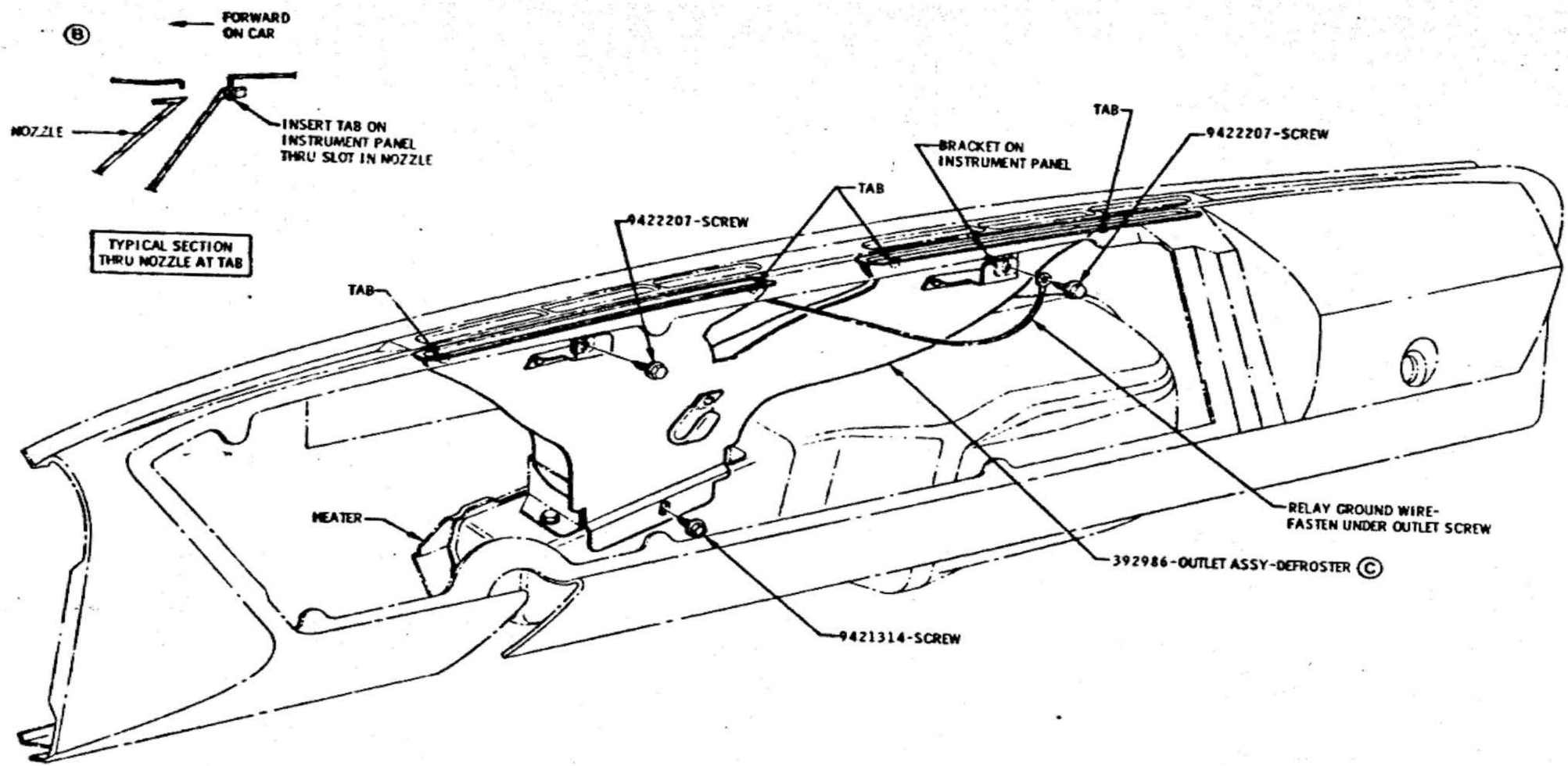

DATE	SYM	REVISION	DR.	CK.	DATE	SYM	REVISION	DR.	CK.	DATE	SYM	REVISION	DR.	CK.
										12-27-65	C	REVISED TO DETAIL		DT
										12-14-65	B	SECTION ADDED		DT
										6-25-65	A	7599937-CLIP NO. REMOVED		DT

DEFROSTER OUTLET TO INSTR. PANEL & HEATER

INSTALLATION INSIDE OF CAR

DATE MAY 14, 1965
DR. BY Tinue
CHECKED F. SANTZ
APPR.
APPR.

FIRST USED 1966

Oldsmobile GRAPHIC ILLUSTRATION

SERIES A

REF. 1ABC 1EN

PAGE 1-2.5A

PART NO. 589998

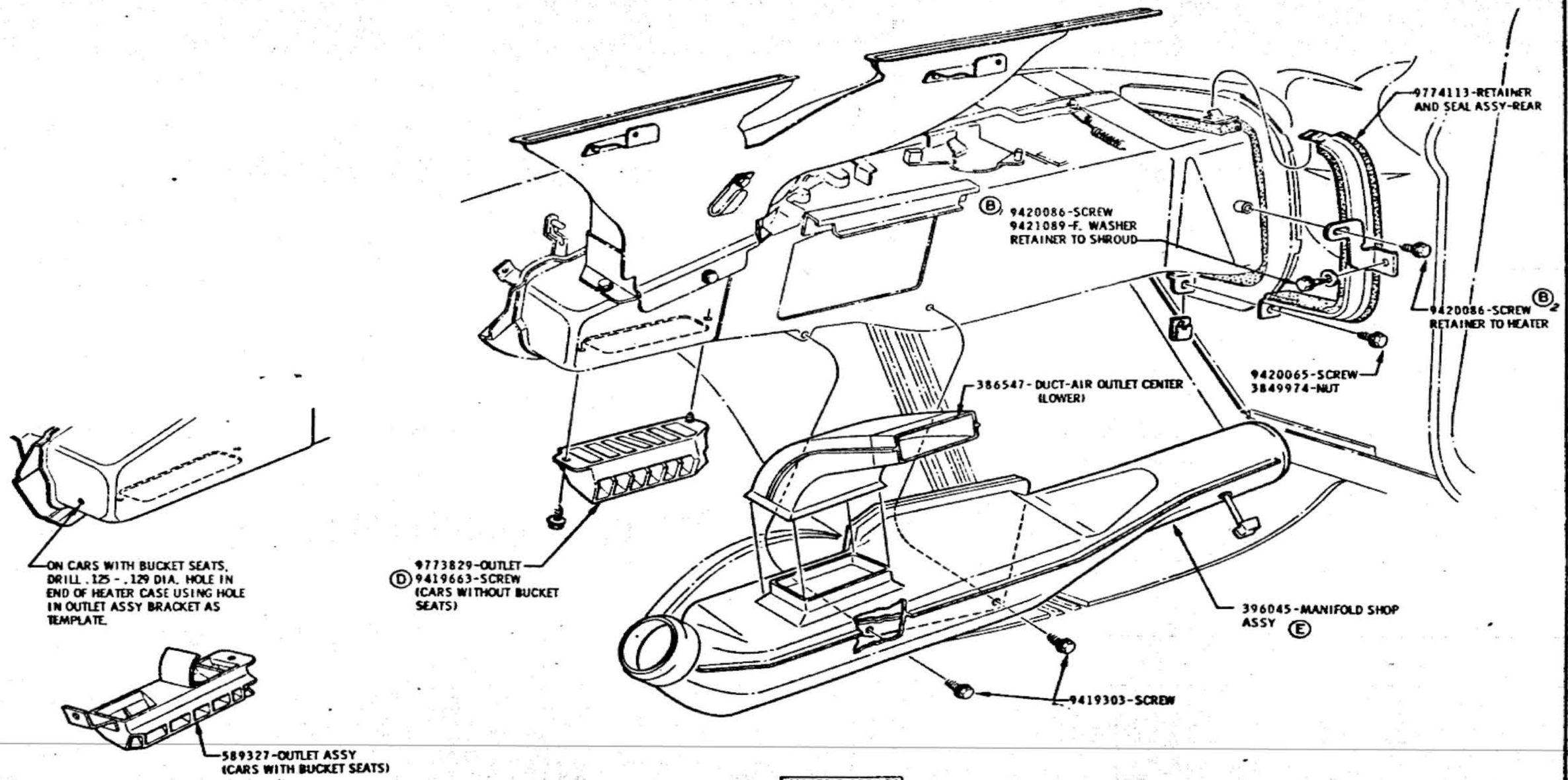

A/C MANIFOLD ASSY TO HEATER

DATE	SYM	REVISION	DR.	CK.	DATE	SYM	REVISION	DR.	CK.	DATE	SYM	REVISION	DR.	CK.
										8-19-66	E	WAS 387019 MANIFOLD		DT
										1-11-66	D	WAS 9419303 SCREW		DT
										7-22-65	C	REDRAWN		
										6-11-65	B2	CALLOUTS REVISED		VP
										4-6-65	A	WAS 9419663 SCREW	CG	VP

INSTALLATION INSIDE OF CAR
DATE MAR. 20, 1965
DR. BY C.V. BEACHNAU
CHECKED H. VAN PELT
APPR. J. E. [illegible]
APPR.

PRODUCT YEAR 1966 — Oldsmobile Service ILLUSTRATION
SERIES A — REF. 35C60
PAGE 1-2.6
PART NO. 589998

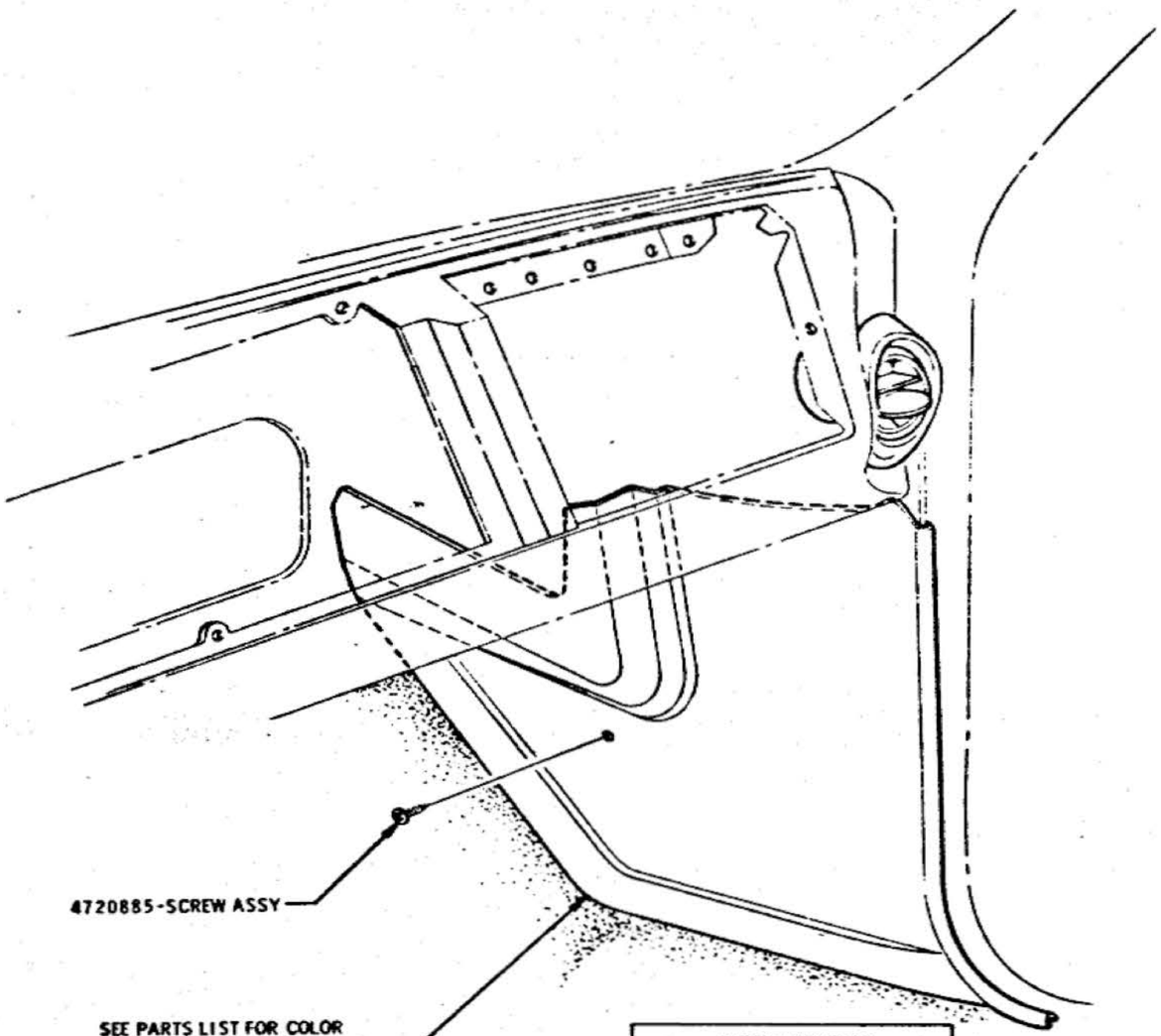

INSTALLATION OF R. H. SHROUD FOUNDATION PANEL A/C

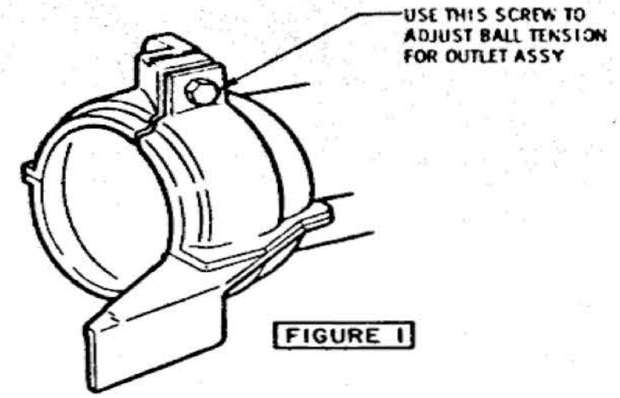

FIGURE 1

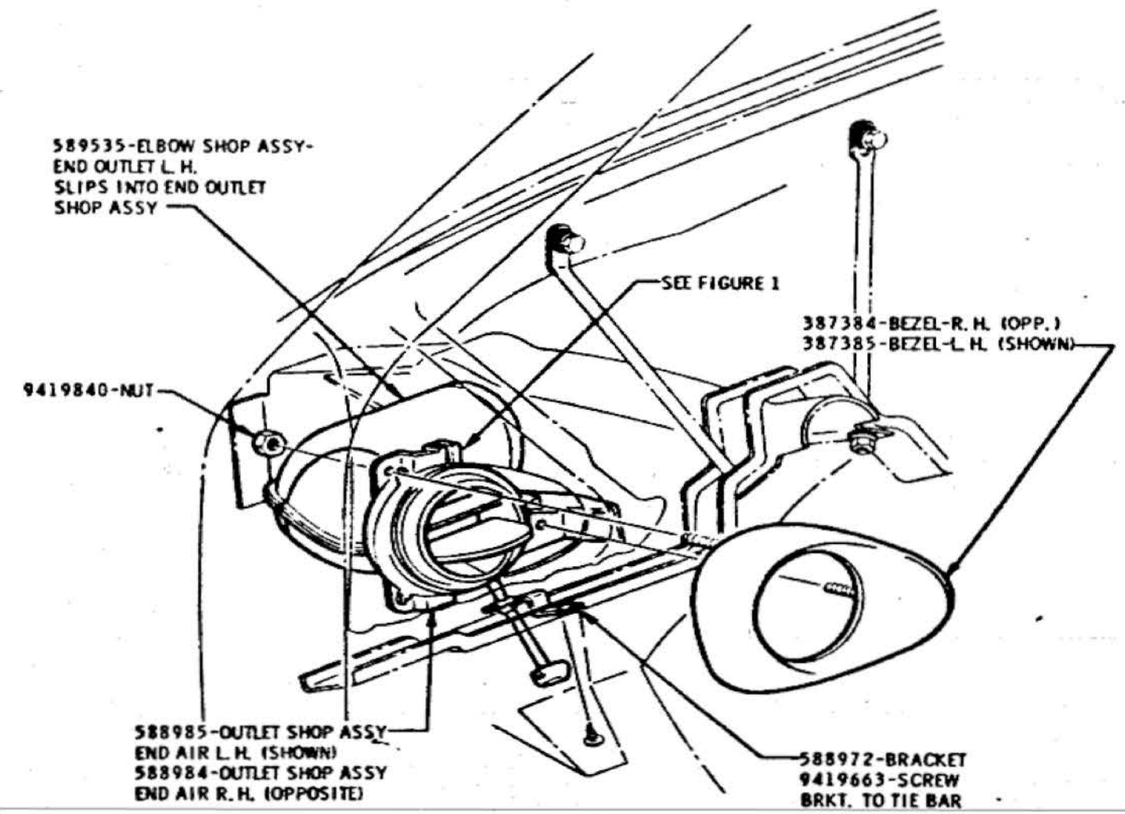

INSTALLATION OF AIR OUTLETS-A/C

A/C RH SHROUD PANEL & END AIR OUTLET

DATE	SYM	REVISION	DR	CK	DATE	SYM	REVISION	DR	CK	DATE	SYM	REVISION	DR	CK
										7-28-65	A	REDRAWN		

INSTALLATION: INSIDE OF CAR

DATE MAR. 19 1965
DR. BY C.V. BEACHNAU
CHECKED G. VAN PELT
APPR. J. S. M.
APPR.

FIRST USED 1966

Oldsmobile GRAPHIC ILLUSTRATION

SERIES A

REF. 35C60

PAGE 1-2.7

PART NO. 589998

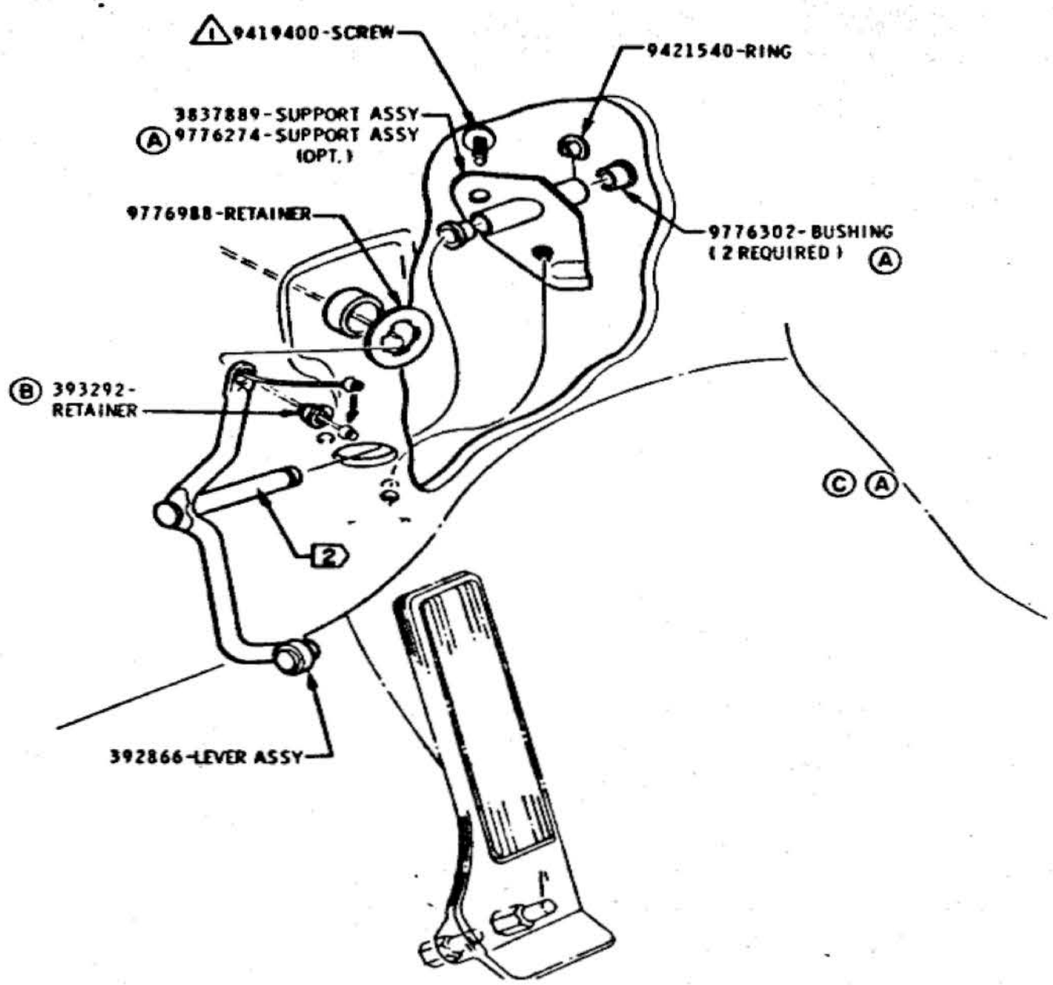

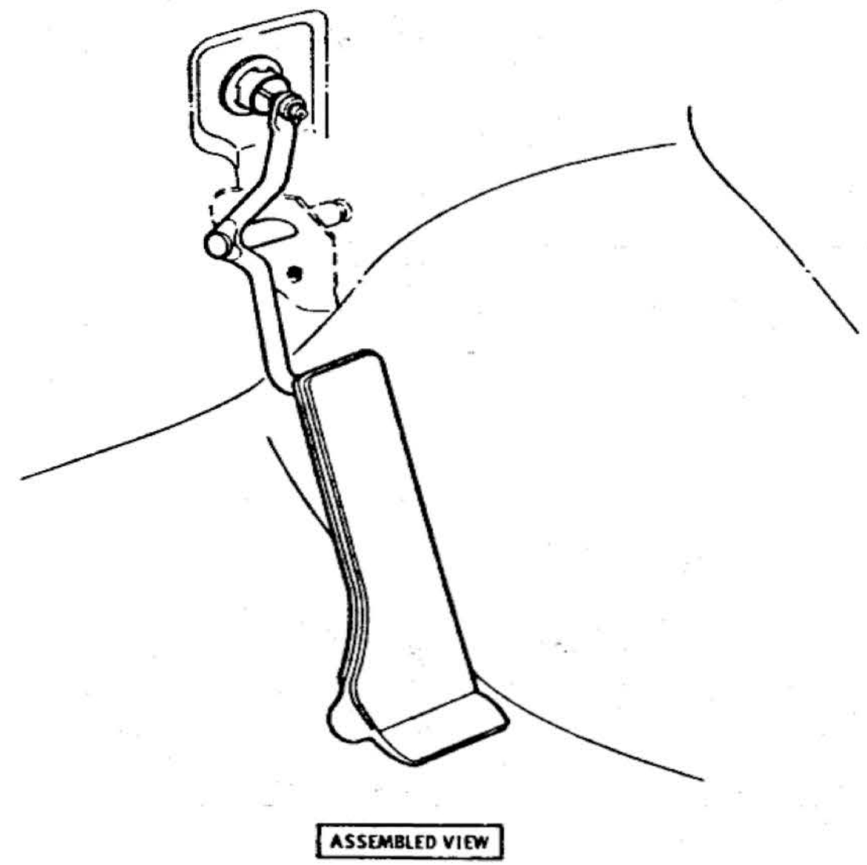

1 96-144 LB. IN.

LUBRICATE AREAS INDICATED 2 WITH 9985038-GREASE

L6 THROTTLE CONTROL

DATE	SYM	REVISION	DR.	CK.	DATE	SYM	REVISION	DR.	CK.	DATE	SYM	REVISION	DR.	CK.
										3-15-66	C	3792913 CANCELLED		
										6-9-65	B	WAS 392238		
										4-10-65	A3	PART NUMBERS ADDED		

INSTALLATION INSIDE OF CAR

DATE APRIL 6, 1965 — DR. BY Scott McDonald — CHECKED — APPR.

FIRST USED 1966 — SERIES A — Oldsmobile Graphic Illustration — REF. TR 69-12

PAGE 1-2.8

PART NO. 589998

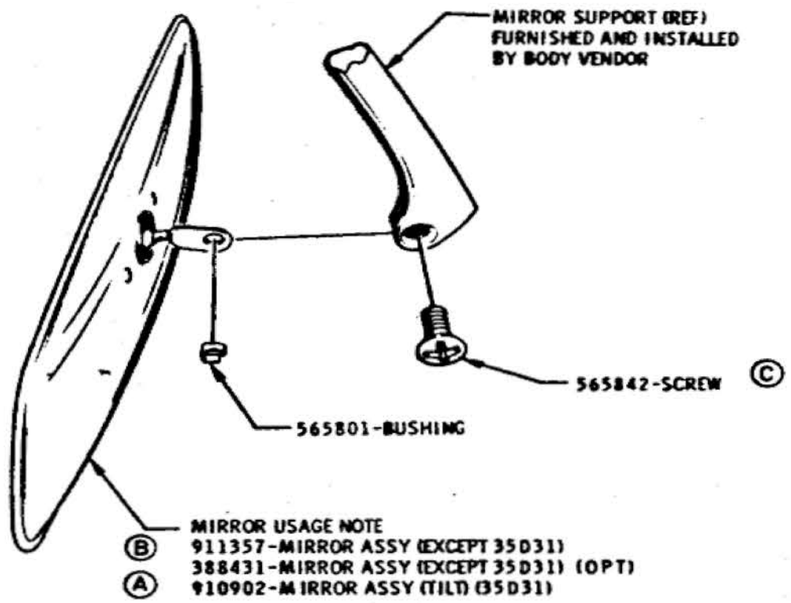

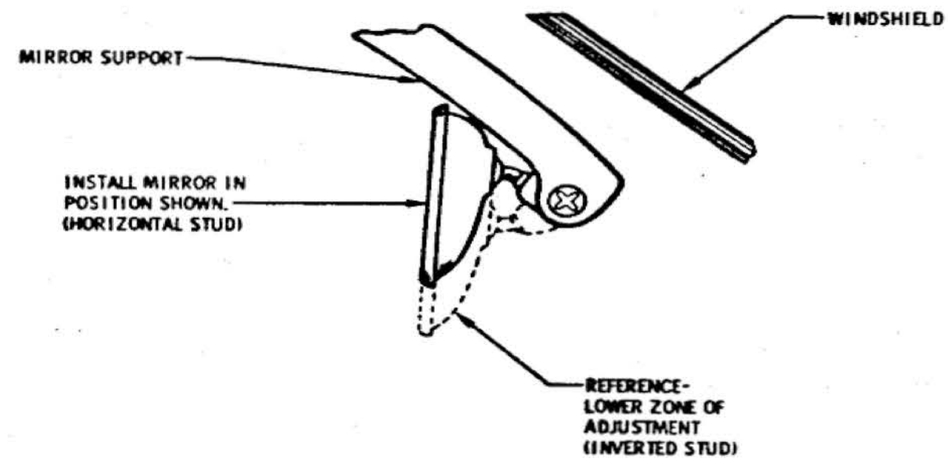

MIRROR INSTALLED
(SIDE VIEW)

INSIDE REAR VIEW MIRROR

DATE	SYM	REVISION	DR.	CK.	DATE	SYM	REVISION	DR.	CK.	DATE	SYM	REVISION	DR.	CK.
										9-3-65	C	534562-SCREW REMOVED	GC	DT
										8-25-65	B	WAS 829763 MIRROR	GC	VP
										4-28-65	A	9775984 MIRROR REMOVED	NJ	DT

INSTALLATION **INSIDE OF CAR**

DATE FEB. 18, 1965
DR. BY B. PARKER
CHECKED H. VAN PELT
APPR. G. NILHART
APPR.

FIRST USED 1966

Oldsmobile Service ILLUSTRATION

SECTION A

REF. 1A26 35D31

PAGE 1-2.15

PART NO. 589998

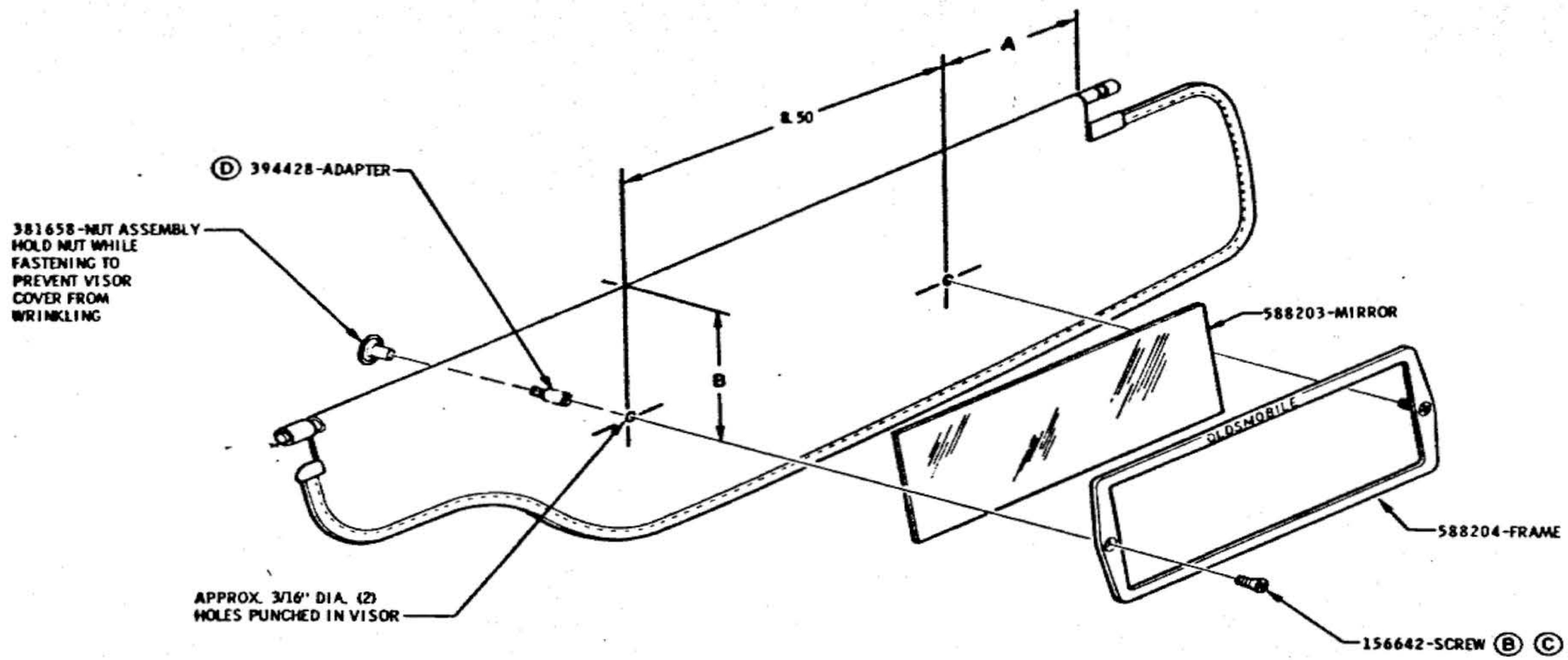

INSTALL MIRROR AND FRAME PARALLEL TO UPPER (STEEL ROD) EDGE OF SUNSHADE, EXCEPT ON CONVERTIBLES, WHERE THE MIRROR AND FRAME SHOULD BE PARALLEL TO LOWER (STITCHED) EDGE.

LOCATING DIMENSIONS		
DIM.	SEDANS	CONV.
A	1.00	.25
B	2.50	2.62

VISOR VANITY MIRROR

DATE	SYM	REVISION	DR.	CK.	DATE	SYM	REVISION	DR.	CK.	DATE	SYM	REVISION	DR.	CK.
										9-2-65	D	394428 ADAPTER ADDED		DT
										9-7-65	C	WAS 156650 SCREW		DT
										7-20-65	B	WAS 156642 SCREW		UP
										7-2-65	A	DIM. CHART ADDED		UP

INSTALLATION INSIDE OF CAR
DATE FEB. 25, 1965
DR. BY B. PARKER
CHECKED H. VAN PELT
APPR. G. MINAR
APPR.

FIRST USED 1966 — Oldsmobile Service ILLUSTRATION
SERIES A
REF. 55 Y60
PAGE 1-2.16
PART NO. 589998

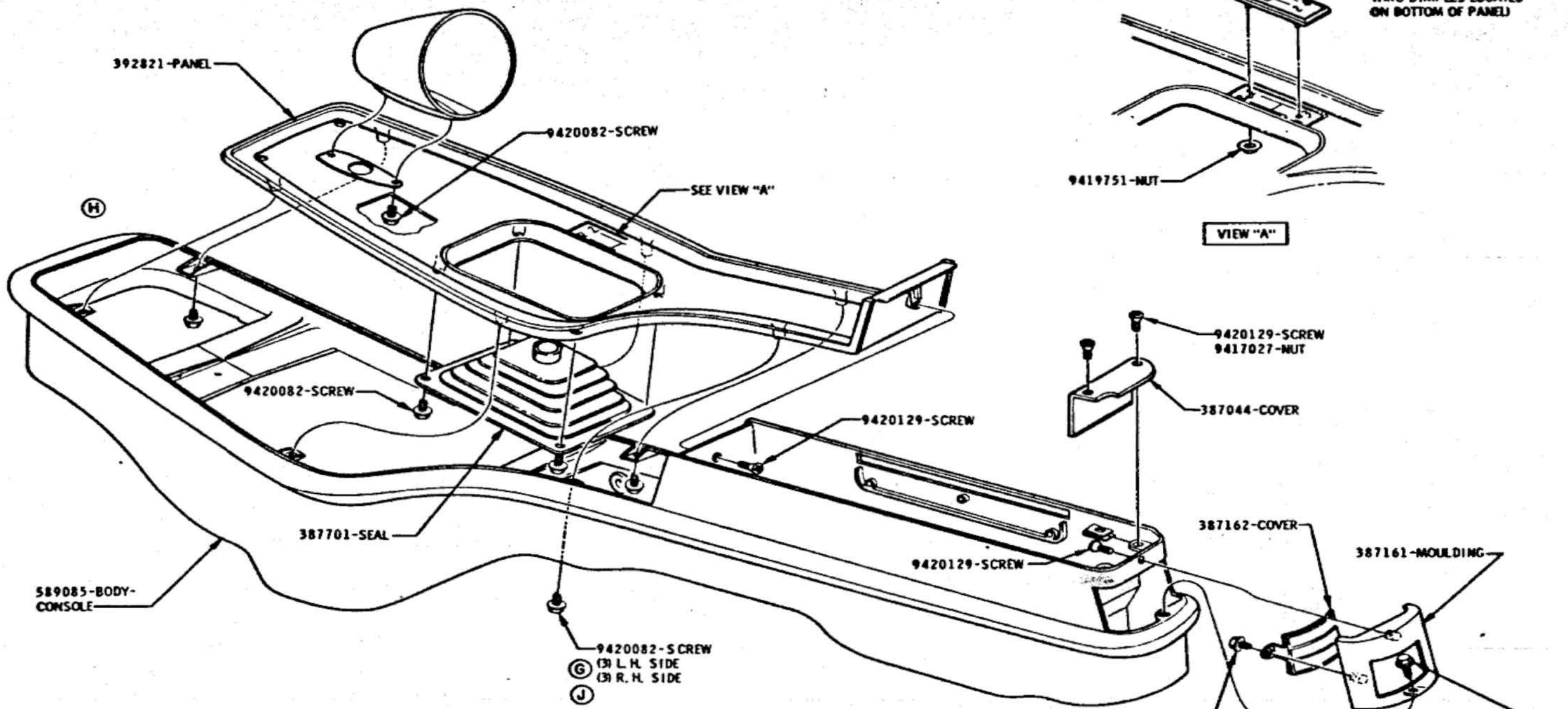

SM CONSOLE—
PANEL, SEAL & MOULDING TO CONSOLE

DATE	SYM	REVISION	DR.	CK.	DATE	SYM	REVISION	DR.	CK.	DATE	SYM	REVISION	DR.	CK.
										7-28-65	E	REDRAWN		
					4-13-66	J	USAGE REVISED		DT	6-24-65	D	NOTE ADDED	CB	DT
					4-13-66	H	NOTE REMOVED		DT	6-24-65	C	392822 PANEL REMOVED	CB	DT
					4-9-65	G	USAGE REVISED		DT	3-26-65	B	WAS 386409 PANEL	JS	DT
					4-22-65	F	SCREWS REVISED		DT	3-26-65	A	WAS 387169 PANEL	JS	DT

INSTALLATION **INSIDE OF CAR**

DATE MAR. 3, 1965
DR. BY T. TYLS
CHECKED H. VAN PELT
APPR. G. NIHART
APPR.

FIRST USED 1966
SERIES A
REF. 35DEF

Oldsmobile GRAPHIC ILLUSTRATION

PAGE 1-2.20
PART NO. 589998

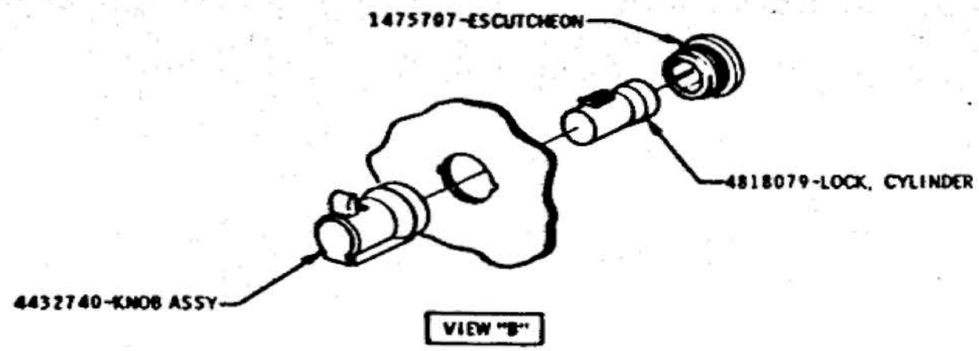

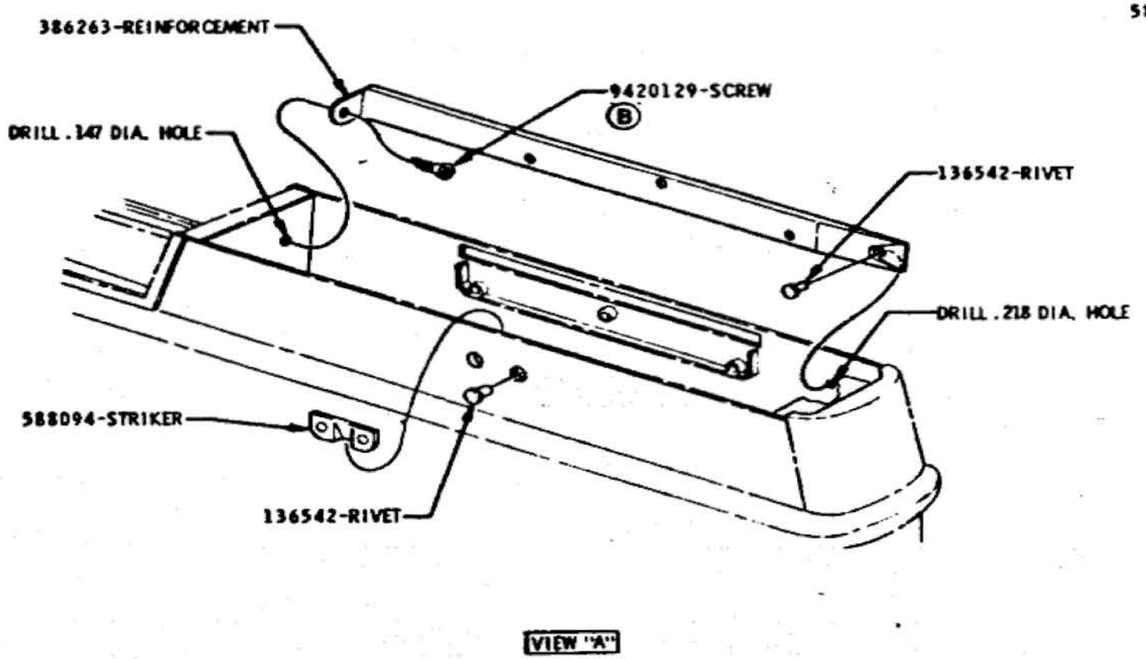

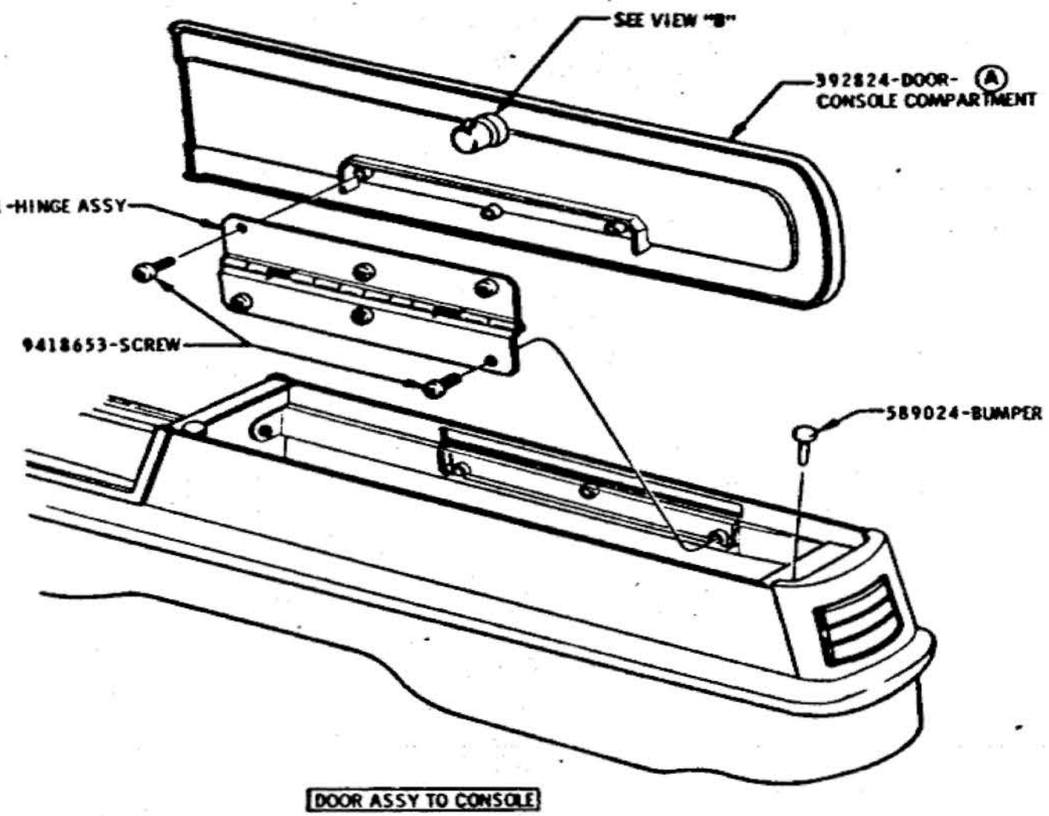

SM CONSOLE—
GLOVE BOX TO CONSOLE

DATE	SYM	REVISION	DR.	CK.	DATE	SYM	REVISION	DR.	CK.	DATE	SYM	REVISION	DR.	CK.
										11-22-65	B	SCREW REVISED		DT
										3-22-65	A	WAS 386410 DOOR	JS	DT

INSTALLATION INSIDE OF CAR
DATE MAR. 3, 1965
DR. BY TITKA
CHECKED H. VAN PELT
APPR. G. ANHART
APPR.

PART NEED 1966 — Oldsmobile GRAPHIC ILLUSTRATION — PAGE 1-2.21
SERIES A — REF. 95 D 55 — PART NO. 589998

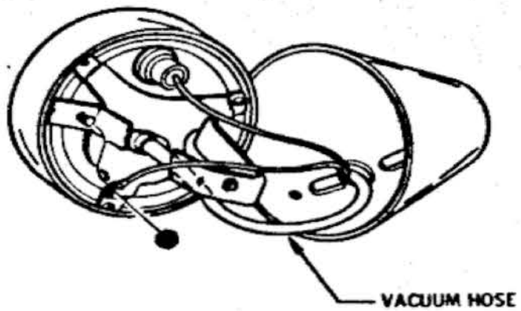

VACUUM GAGE HOOK UP

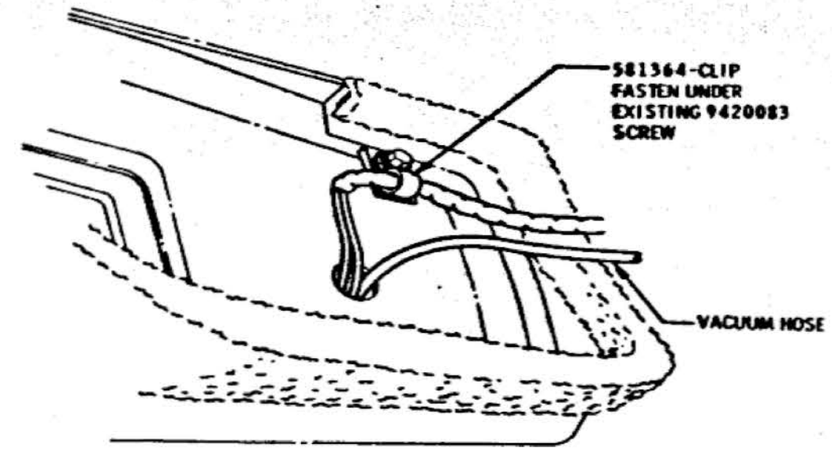

BOTTOM VIEW OF CONSOLE

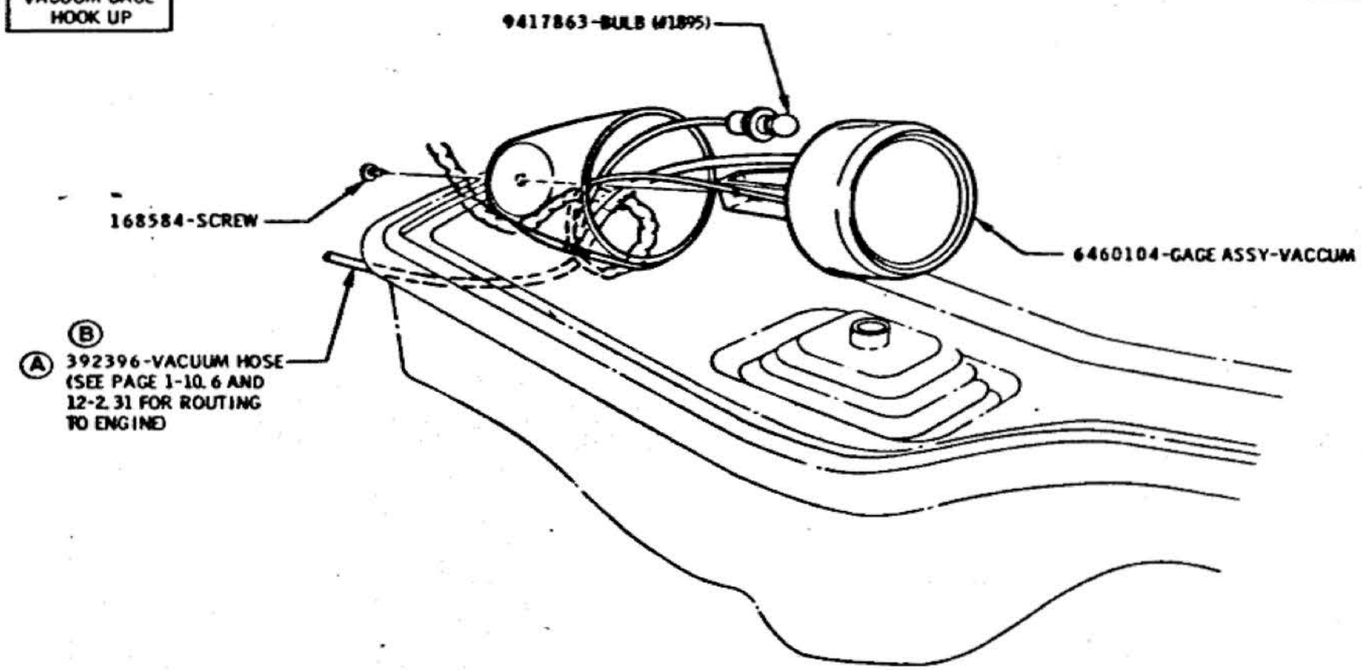

CONSOLE WIRING

SM CONSOLE—
VACUUM GAGE

DATE	SYM	REVISION	DR.	CK.	DATE	SYM	REVISION	DR.	CK.	DATE	SYM	REVISION	DR.	CK.
										9-14-65	B	WAS 392394-HOSE	VG	DT
										7-23-65	A	PART NO. ADDED	CG	VD

INSTALLATION INSIDE OF CAR
DATE MAR. 3, 1965
DR. BY TITUS
CHECKED H. VAN PELT
APPR. G. NIHART
APPR.

FIRST USED 1966
Oldsmobile Service ILLUSTRATION
SERIES A
REF. 35 DOT
PAGE 1-2.22
PART NO. 589998

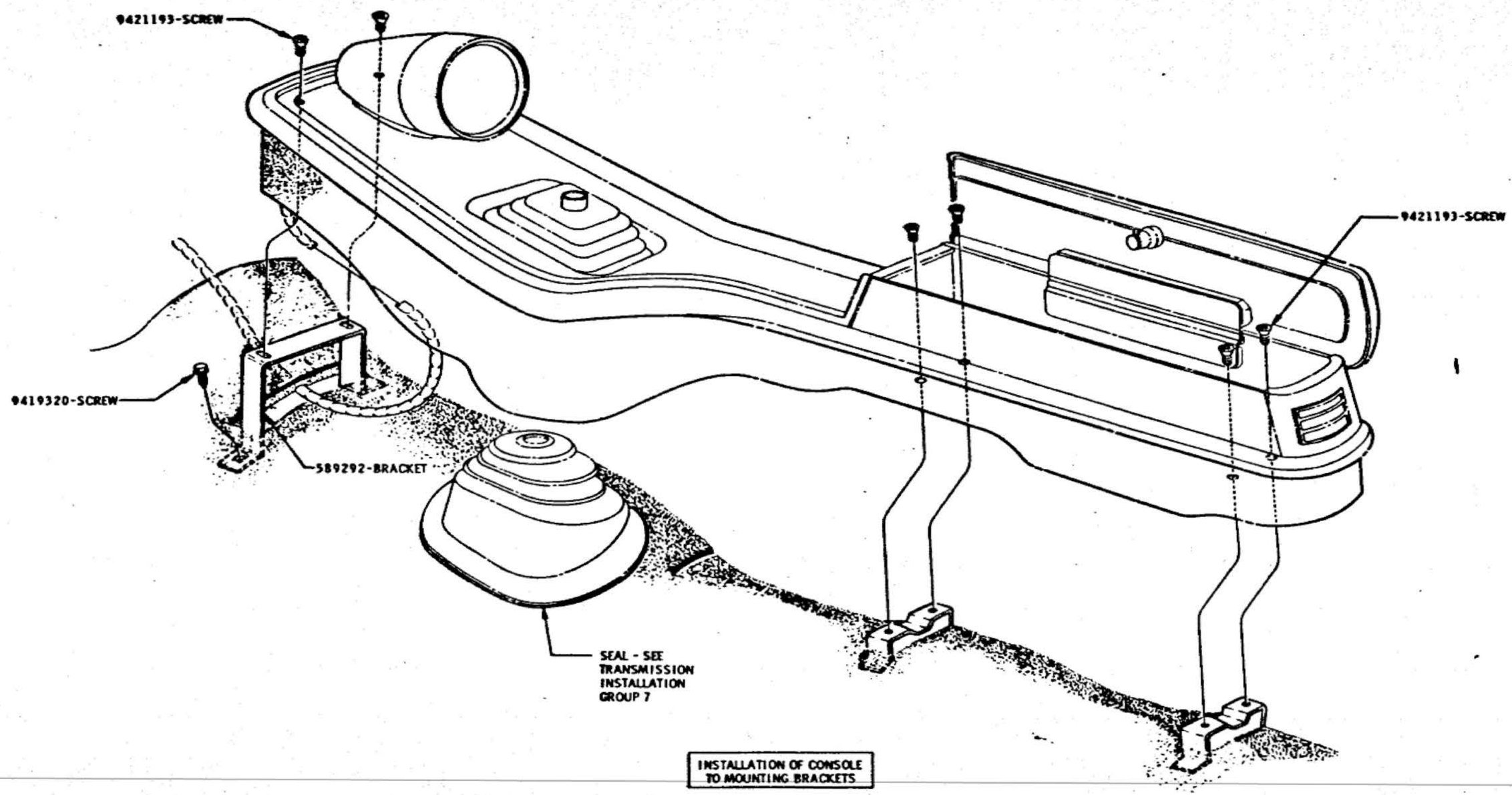

INSTALLATION OF CONSOLE TO MOUNTING BRACKETS

SM CONSOLE—
CONSOLE TO FLOOR

DATE	SYM	REVISION	DR.	CK.	DATE	SYM	REVISION	DR.	CK.	DATE	SYM	REVISION	DR.	CK.
										11-18-65	B	SCREWS REVISED		
										7-1-65	A	REDRAWN		

INSTALLATION INSIDE OF CAR

DATE MAR 3, 1965
DR. BY TITLE
CHECKED H. VAN PELT
APPR. G. NIMART
APPR.

FIRST USED 1966

Oldsmobile GRAPHIC ILLUSTRATION

GROUP A

DIV. 350 BS

PAGE 1-2.23

PART NO. 589998

OLDSMOBILE DIVISION GENERAL MOTORS CORPORATION LANSING — MICHIGAN

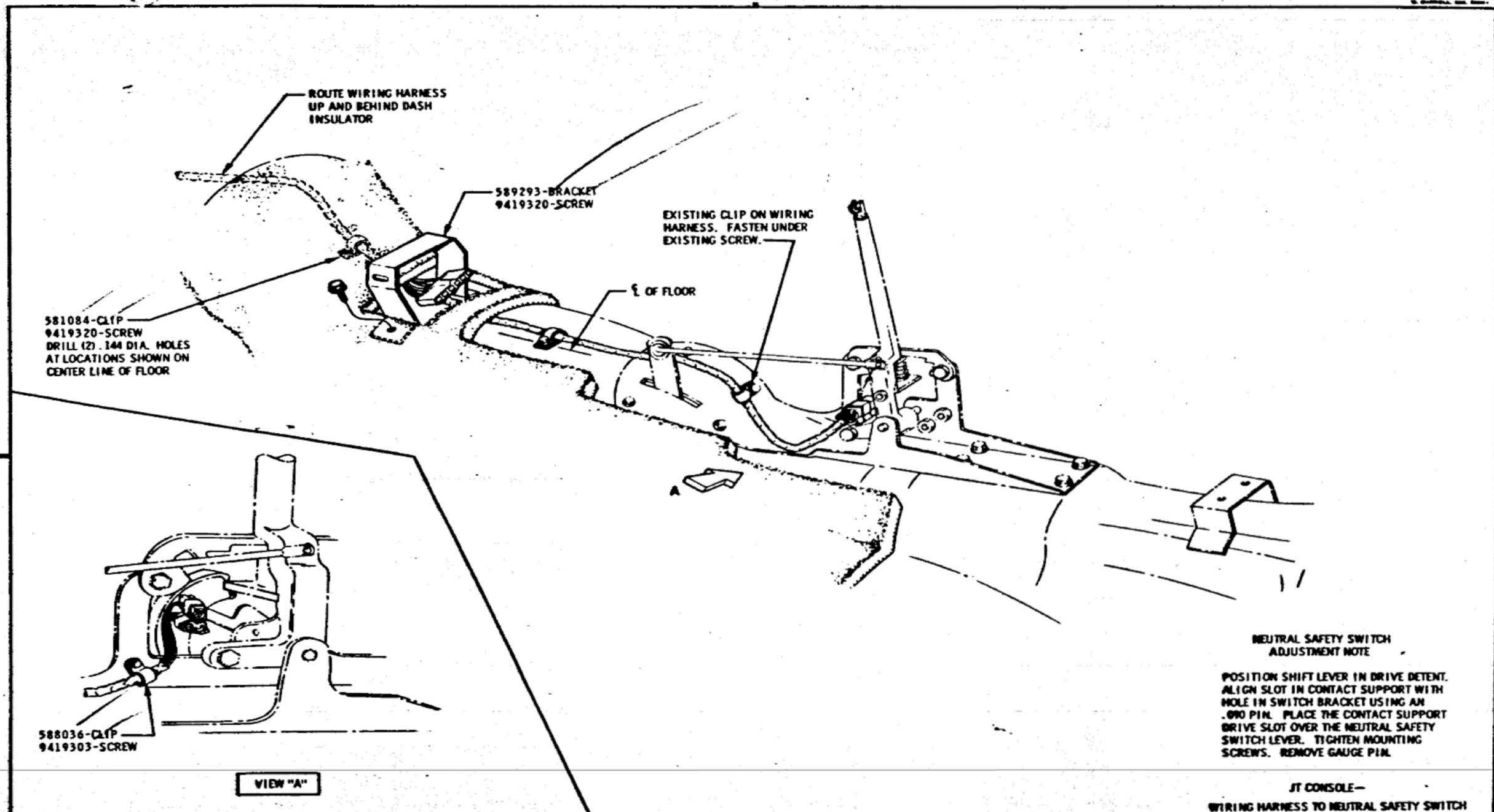

NEUTRAL SAFETY SWITCH ADJUSTMENT NOTE

POSITION SHIFT LEVER IN DRIVE DETENT. ALIGN SLOT IN CONTACT SUPPORT WITH HOLE IN SWITCH BRACKET USING AN .090 PIN. PLACE THE CONTACT SUPPORT DRIVE SLOT OVER THE NEUTRAL SAFETY SWITCH LEVER. TIGHTEN MOUNTING SCREWS. REMOVE GAUGE PIN.

JT CONSOLE—

WIRING HARNESS TO NEUTRAL SAFETY SWITCH

DATE	SYM	REVISION	DR.	CK.	DATE	SYM	REVISION	DR.	CK.	DATE	SYM	REVISION	DR.	CK.

INSTALLATION **INSIDE OF CAR**

DATE MAR. 3, 1965
DR. BY Tom
CHECKED H. VAN PELT
APPR. E. HAMRT
APPR.

FIRST USED 1966

Oldsmobile Division

PAGE 1-2.24

GROUP A

REV. 35 965

PART NO. 589998

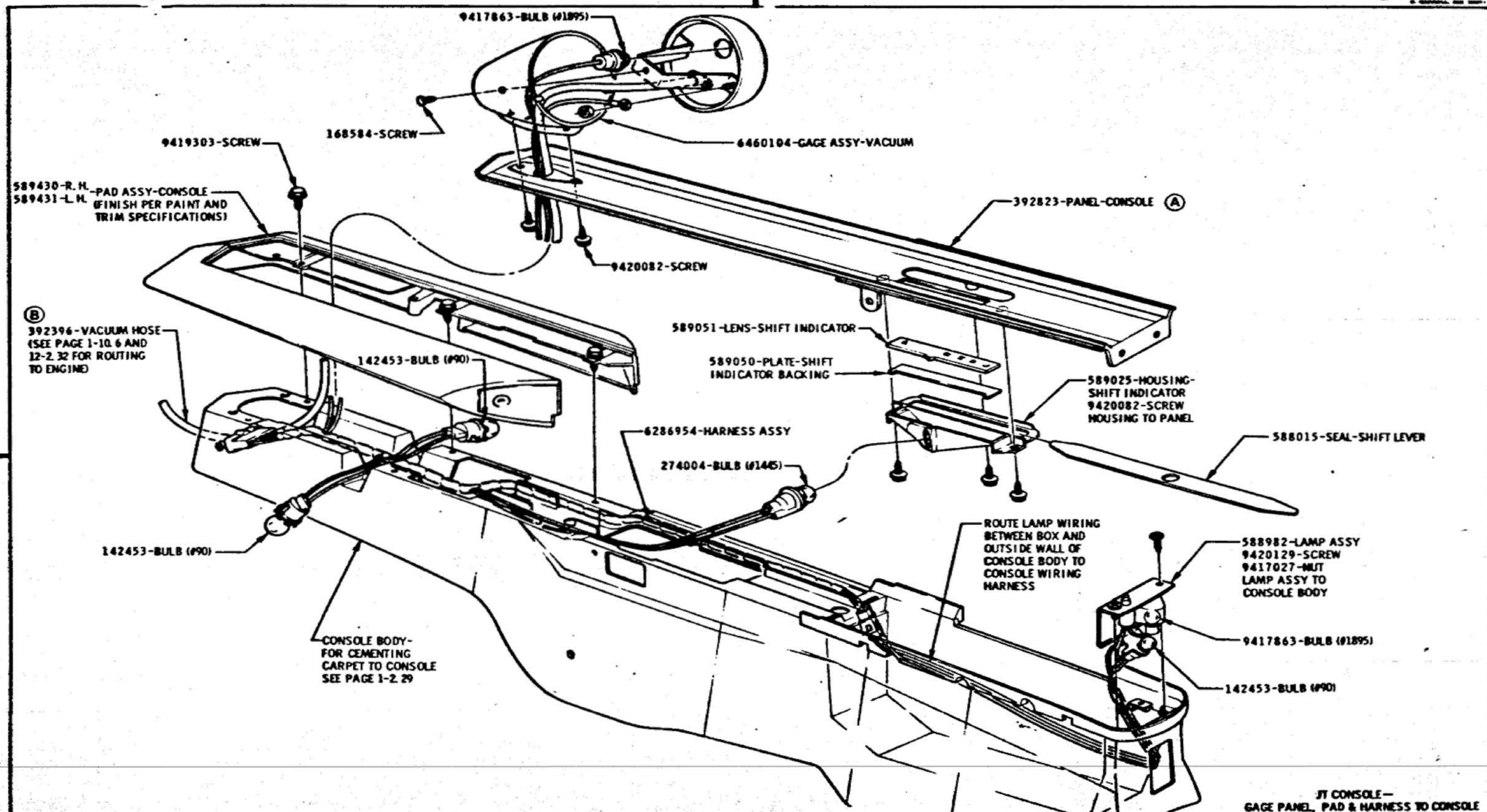

JT CONSOLE—
GAGE PANEL, PAD & HARNESS TO CONSOLE

DATE	SYM	REVISION	DR.	CK.	DATE	SYM	REVISION	DR.	CK.	DATE	SYM	REVISION	DR.	CK.
										9-13-66	B	PART NUMBER ADDED		DT
										9-27-66	A	WAS 356411 PANEL	JS	DT

INSTALLATION **INSIDE OF CAR**

DATE MAR. 3, 1963
DR. BY TITUS
CHECKED H. VAN PELT
APPR. G. NIHART
APPR.

FIRST USED 1966
Oldsmobile Service ILLUSTRATION
SUFFIX A
REF. REDOT 5E4.39
PAGE 1-2.B
PART NO. 589998

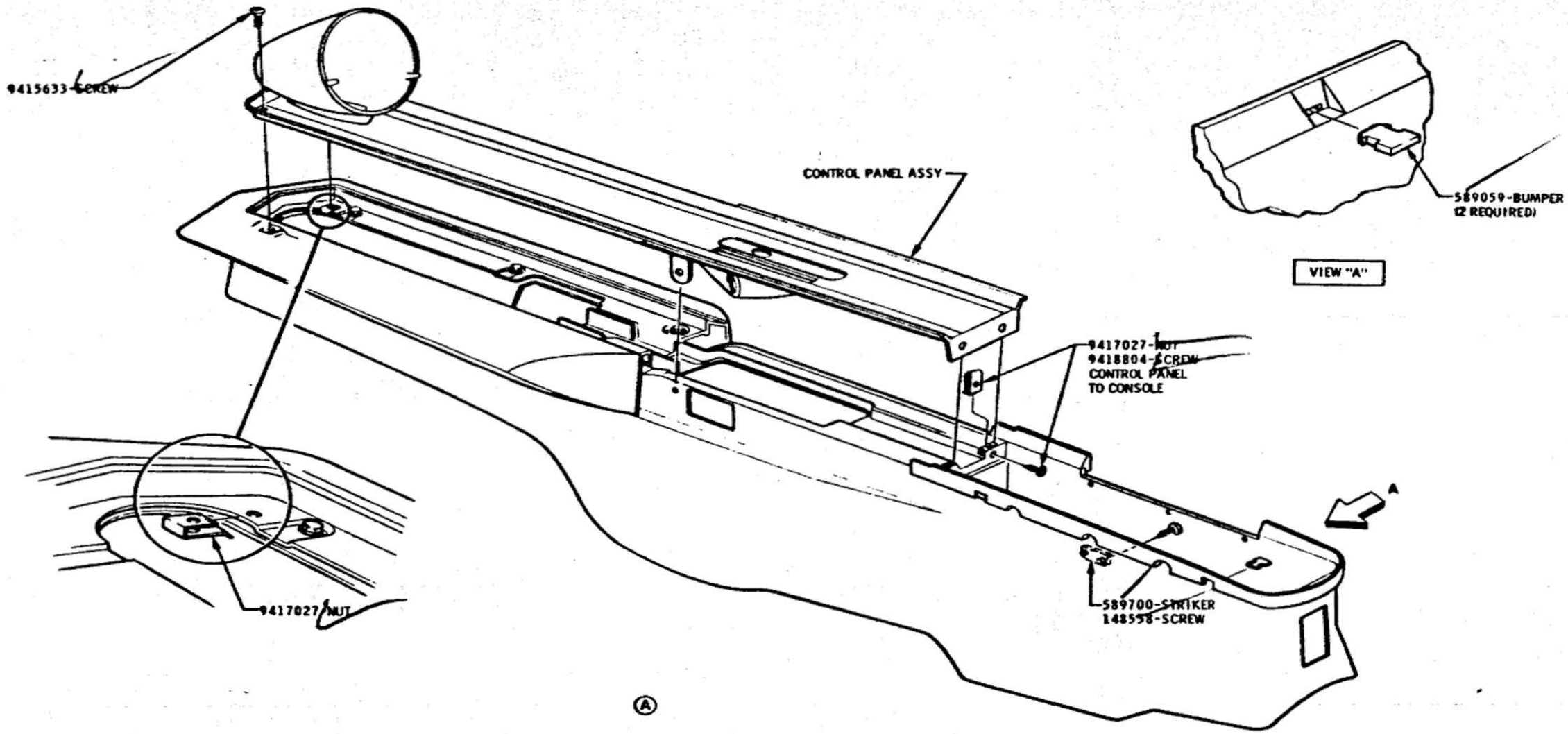

CONTROL PANEL TO CONSOLE BODY.

JT CONSOLE—
CONTROL PANEL

DATE	SYM	REVISION	DR.	CK.	DATE	SYM	REVISION	DR.	CK.	DATE	SYM	REVISION	DR.	CK.
										4-28-65	A	DEFLECTOR REMOVED		

INSTALLATION INSIDE OF CAR

DATE MAR. 3, 1965
DR. BY TITUS
CHECKED H. VAN PELT
APPR. G. WRIGHT
APPR.

FIRST USED 1966 — Oldsmobile Service ILLUSTRATION

SERIES A — REV. 3-1-65

PAGE 3-2.26

PART NO. 589998

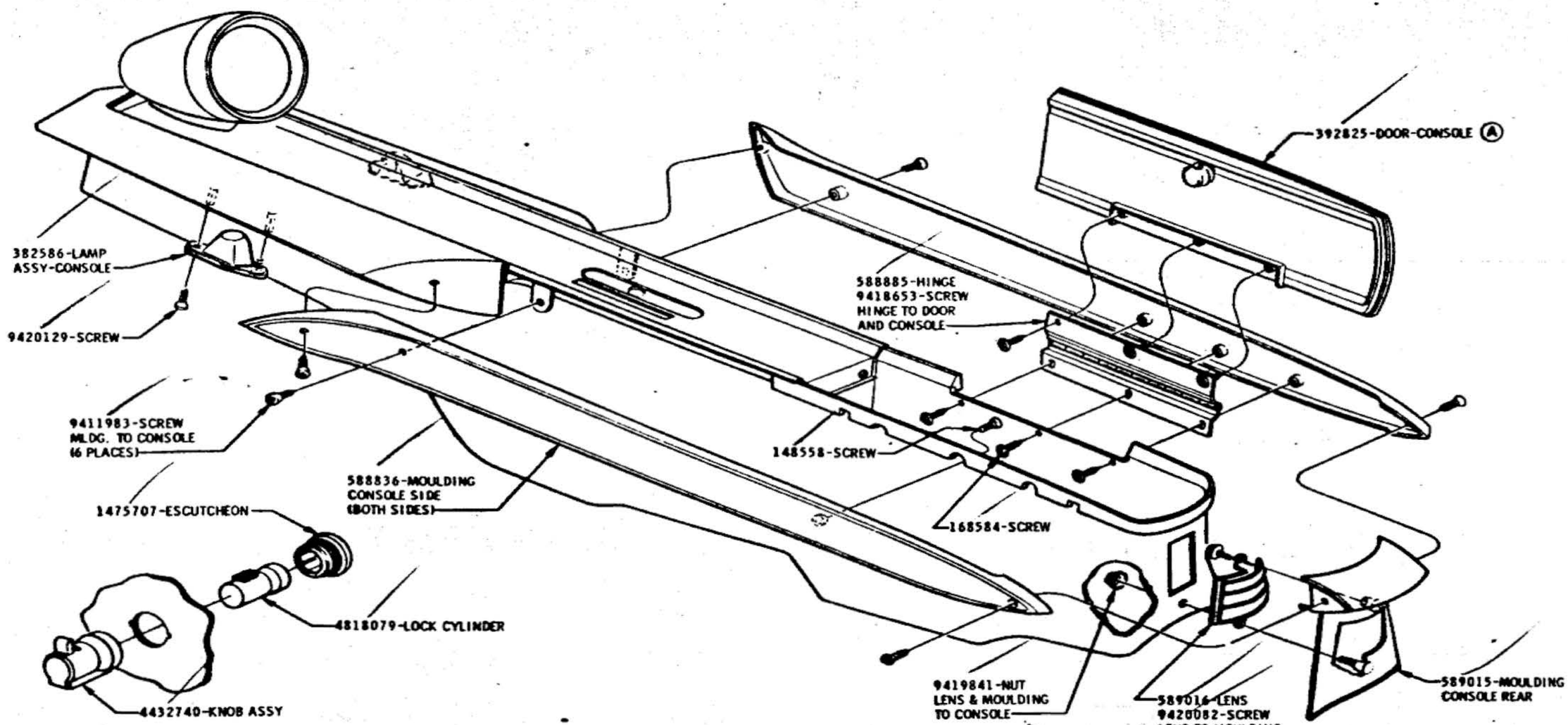

JT CONSOLE—
GLOVE BOX DOOR, MOULDINGS & LAMPS

DATE	SYM	REVISION	DR.	CK.	DATE	SYM	REVISION	DR.	CK.	DATE	SYM	REVISION	DR.	CK.
										3-27-65	A	WAS 386412 DOOR	JS	DT

INSTALLATION **INSIDE OF CAR**

DATE MAR. 3, 1965
DR. BY TITUS
CHECKED H. VAN PELT
APPR. G. F. HANT

FIRST USED 1966 — Oldsmobile Service Classification

SERIES A — REF. 35D55 — PAGE 1-2.27

PART NO. 589998

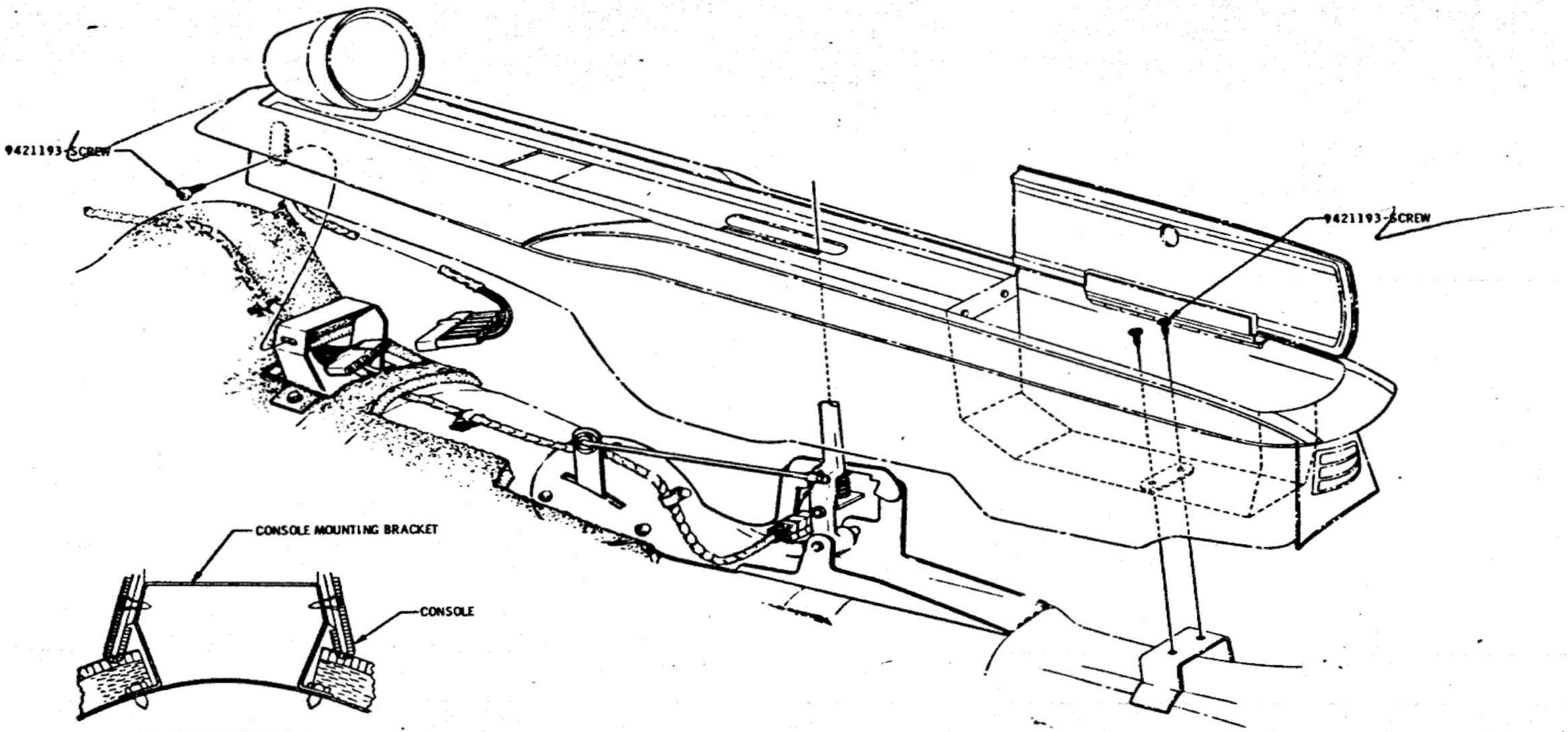

SECTION THRU CARPET AT MOUNTING BRACKET

INSTALLATION OF CONSOLE TO MOUNTING BRACKETS

JT CONSOLE—
CONSOLE TO MOUNTING BRACKETS

DATE	SYM	REVISION	DR.	CK.	DATE	SYM	REVISION	DR.	CK.	DATE	SYM	REVISION	DR.	CK.

INSTALLATION INSIDE OF CAR

DATE MAR. 3, 1965
DR. BY TITUS
CHECKED H. VAN PELT
APPR. G. HUBART
APPR.

FIRST USED 1966

Oldsmobile GRAPHIC ILLUSTRATION

SERIES A

REV. 3-DSS

PAGE 1-2 B

PART NO. 589998

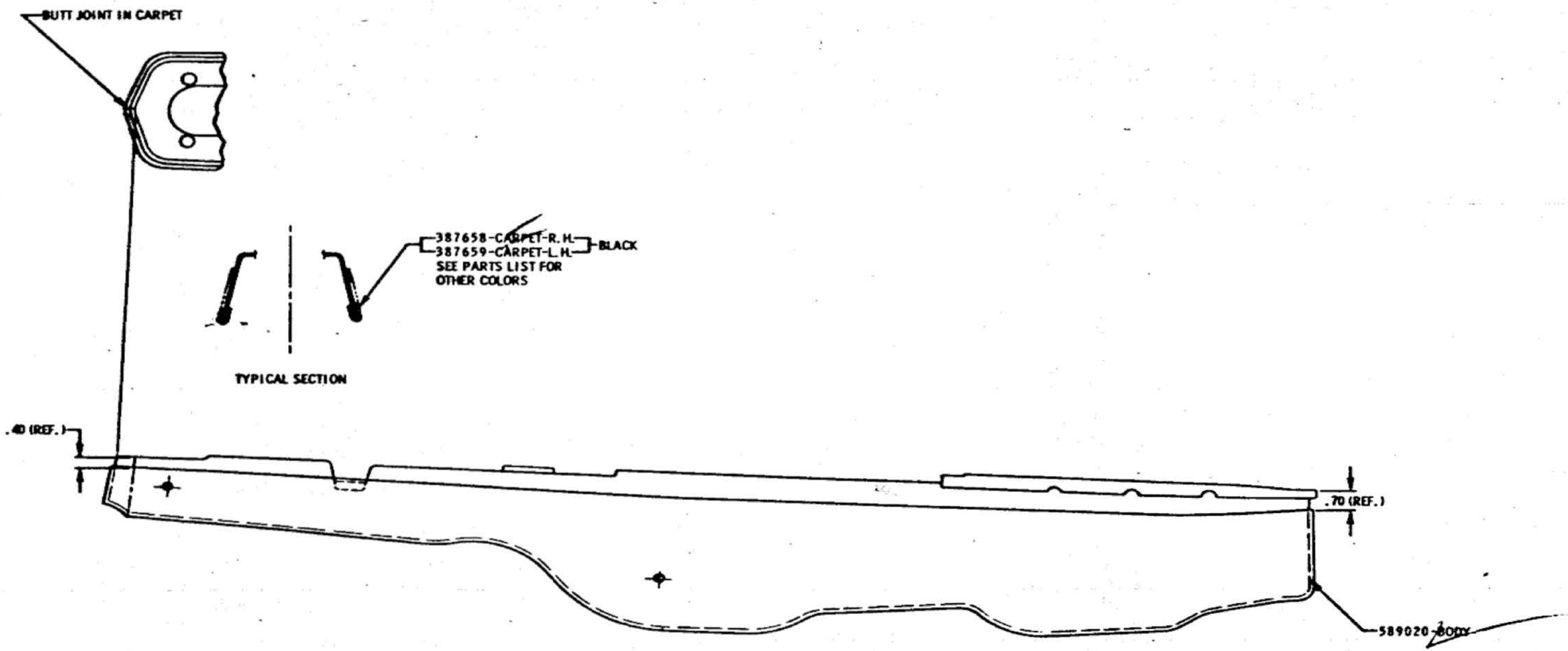

SECURE CARPET TO CONSOLE
BODY WITH CEMENT #9981192

JT CONSOLE-
CARPET CEMENTING TO CONSOLE

DATE	SYM	REVISION	DR.	CK.	DATE	SYM	REVISION	DR.	CK.	DATE	SYM	REVISION	DR.	CK.

INSTALLATION INSIDE OF CAR

DATE MAR. 3, 1965
DR. BY J.E. OSLER
CHECKED H. VAN PELT
APPR. G. ANHART
APPR.

FIRST USED 1966

Oldsmobile Service Illustration

SERIES A

REF. 35.D.55

PAGE 1-2.29

PART NO. 589998

GROUP 1B & 2B - BODY MOUNTING & FRAME

BODY MOUNTING & FRAME ---------- 1B & 2B-2. 1

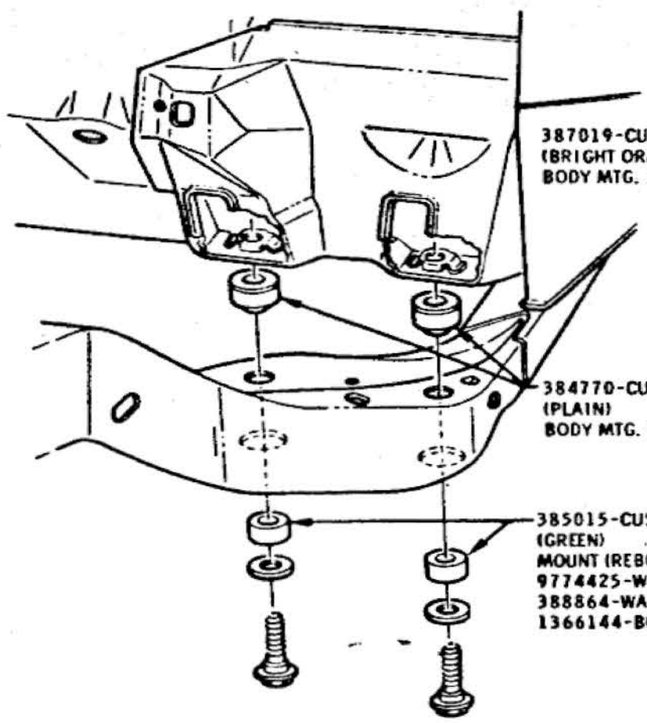

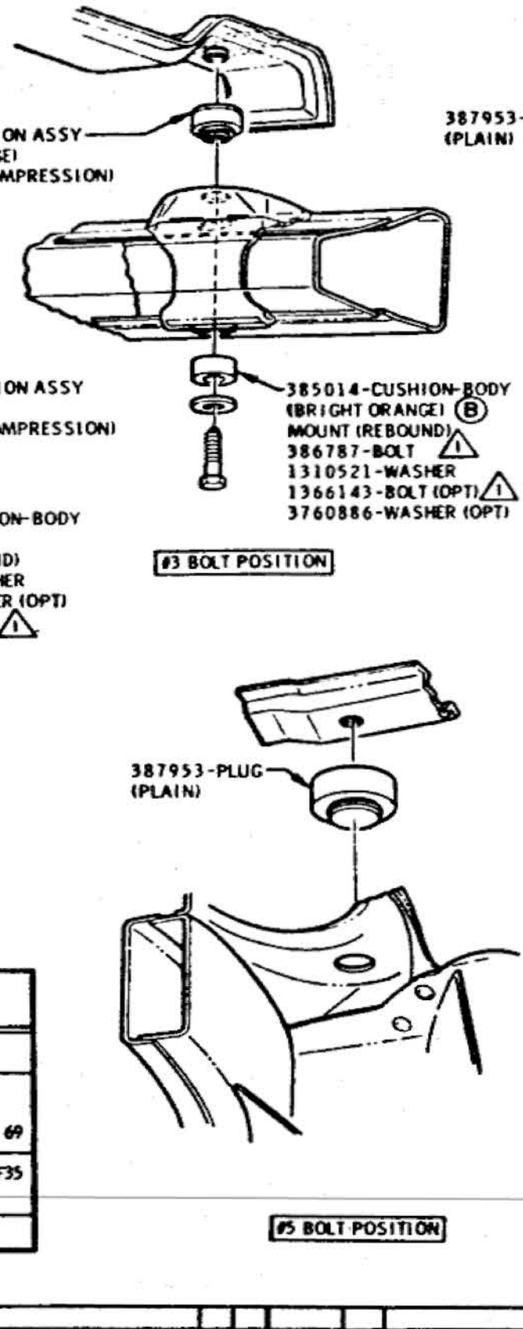

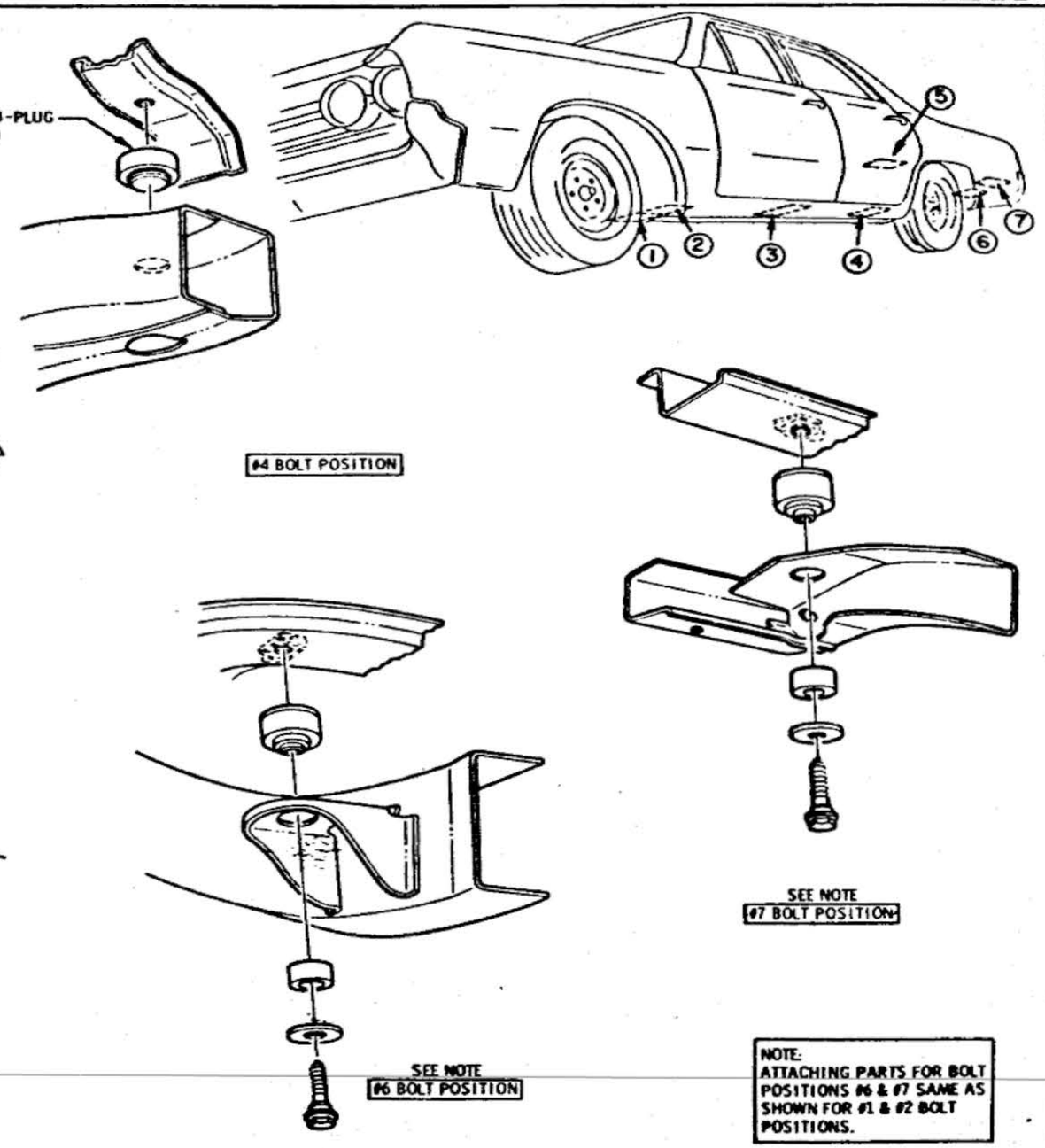

Ⓐ △1 25 - 45 LB. FT.

FRAME USAGE CHART

FRAME ASSY NO.	CODE	GROUP	USAGE
* 9782629	GV	2B	3300 & 3500
390504	GY	2B	3867
		35F35	3407, 69, 3639, 69, 17, 3807, 17, 39, 69
390502	GW	2B	3300, 3400, 3500, 3600, 3800 (EXC 35F35 & EXT. WAGONS & CONVERTIBLES)
390503	GX	2B	EXT. WAGONS

* OPTIONAL TO 390502

NOTE:
ATTACHING PARTS FOR BOLT POSITIONS #6 & #7 SAME AS SHOWN FOR #1 & #2 BOLT POSITIONS.

DATE	SYM	REVISION	DR.	CK.	DATE	SYM	REVISION	DR.	CK.	DATE	SYM	REVISION	DR.	CK.
										1-19-66	B	BRIGHT ORANGE WAS GREEN	JG	
										12-2-65	A	WAS 25-35 LB. FT.		

INSTALLATION **BODY MOUNTING & FRAME**

DATE MARCH 8, 1965
DR. BY. MODERN
CHECKED
APPR.
APPR.

FIRST USED 1966

Oldsmobile GRAPHIC ILLUSTRATION

SERIES A

REF.

PAGE 1B & 2B-2.1

PART NO. 589998

OLDSMOBILE PRODUCT INFORMATION MANUAL

3 - FRONT SUSPENSION

GROUP 3 - FRONT SUSPENSION

392172 CHART-FRONT SPRING USAGE---------- 3-1.2

393658 CHART-KNUCKLE SHOP ASSEMBLY CODE---------- 3-1.5

STEERING LINKAGE---------- 3-2.1
CONTROL ARMS, KNUCKLE, SHOCKS & SPRINGS----------3-2.2
STABILIZER CHART, SPRING SEAT, G.M. ASSEMBLY DIVISION & STATIC COLLECTOR---------- 3-2.3

OLDSMOBILE DIVISION GENERAL MOTORS CORPORATION LANSING — MICHIGAN

FRONT SUSPENSION SPRING USAGE - 1966 F-85

		SM-FS TRANSMISSION		JETAWAY TRANSMISSION		SM-FS & JETAWAY TRANSMISSION							
		3C	35C60	35M33	35C60	97F74 & 98F74 (J)		35B01 (F60)		35B07 (F60)		35W29 (F60)	
SERIES	MODEL	STD. CAR	STD. CAR WITH A/C	EXC. A/C	WITH A/C	EXPORT	EXPORT WITH A/C	POLICE EXC. A/C	POLICE WITH A/C	POLICE EXC. A/C	POLICE WITH A/C	EXC. A/C	WITH A/C
33300 L6	07	383909 SD	382818 SJ	383909 SD	382818 SJ	382819 SI	384543 SR	384117 SV	384117 SV	384117 SV	384117 SV	NA	NA
	35	383910 SE	381940 SK	383910 SE	381940 SK	382818 SJ	385016 SU	384117 SV	384117 SV	NA	NA	NA	NA
	69	383910 SE	381946 SL	383910 SE	381946 SL	382818 SJ	384544 SS	384117 SV	384117 SV	384117 SV	384117 SV	NA	NA
33400 V8	07	384544 SS	386288 SY	381946 SL	384752 ST	384544 SS	386288 SY	389421 RP	389422 RS	389421 RP	389422 RS	389421 RP	389422 RS
	35	381946 SL	386288 SY	381946 SL	386288 SY	385016 SU	386288 SY	389421 RP	389422 RS	NA	NA	NA	NA
	55	(G) 388285 RH	(H) 394553 LF	(G) 388285 RH	(H) 394553 LF	(G) 388285 RH	(H) 394553 LF	389421 RP	389422 RS	NA	NA	NA	NA
	65	388285 RH	394553 LF	388285 RH	394553 LF	388285 RH	394553 LF	389421 RP	389422 RS	NA	NA	NA	NA
	69	384544 SS	386288 SY	381946 SL	386288 SY	384544 SS	386288 SY	389421 RP	389422 RS	389421 RP	389422 RS	NA	NA
33500 L6	17	383909 SD	382818 SJ	383909 SD	382818 SJ	382819 SI	384543 SR	384117 SV	384117 SV	384117 SV	384117 SV	NA	NA
	35	383910 SE	381940 SK	383910 SE	381940 SK	382818 SJ	385016 SU	384117 SV	384117 SV	NA	NA	NA	NA
	39	383910 SE	381946 SL	383910 SE	381946 SL	382818 SJ	384544 SS	384117 SV	384117 SV	384117 SV	384117 SV	NA	NA
	69	383910 SE	381946 SL	383910 SE	381946 SL	382818 SJ	384544 SS	384117 SV	384117 SV	384117 SV	384117 SV	NA	NA
33600 V8	17	384544 SS	386288 SY	381946 SL	384752 ST	384544 SS	386288 SY	389421 RP	389422 RS	389421 RP	389422 RS	389421 RP	389422 RS
	35	381946 SL	386288 SY	381946 SL	386288 SY	385016 SU	386288 SY	389421 RP	389422 RS	NA	NA	NA	NA
	39	384544 SS	386288 SY	381946 SL	386288 SY	384544 SS	386288 SY	389421 RP	389422 RS	389421 RP	389422 RS	NA	NA
	69	384544 SS	386288 SY	381946 SL	386288 SY	384544 SS	386288 SY	389421 RP	389422 RS	389421 RP	389422 RS	NA	NA
33800 V8	07	384544 SS	386288 SY	381946 SL	384752 ST	384544 SS	386288 SY	389421 RP	389422 RS	NA	NA	389421 RP	389422 RS
	17	384544 SS	386288 SY	381946 SL	384752 ST	384544 SS	386288 SY	389421 RP	389422 RS	NA	NA	389421 RP	389422 RS
	39	384544 SS	386288 SY	381946 SL	386288 SY	384544 SS	386288 SY	389421 RP	389422 RS	NA	NA	NA	NA
	55	(G) 388285 RH	(H) 394553 LF	(G) 388285 RH	(H) 394553 LF	(G) 388285 RH	(H) 394553 LF	389421 RP	389422 RS	NA	NA	NA	NA
	65	388285 RH	394553 LF	388285 RH	394553 LF	388285 RH	394553 LF	389421 RP	389422 RS	NA	NA	NA	NA
	67	384752 ST	386288 SY	384544 SS	386288 SY	384752 ST	386288 SY	NA	NA	NA	NA	389421 RP	389422 RS
	69	384544 SS	386288 SY	381946 SL	386288 SY	384544 SS	386288 SY	389421 RP	389422 RS	NA	NA	NA	NA

SPRINGS SHOULD BE USED EITHER LOW RANGE ON BOTH SIDES OF CAR OR HIGH RANGE ON BOTH SIDES OF CAR.

TAPE IDENTIFICATION:-
HIGH LOAD RANGE-PLAIN IDENTIFICATION.
LOW LOAD RANGE-BLACK CIRCLE AROUND CODE LETTER.

FOR SPRING DETAIL SEE DRAWING 381935

DATE	SYM	REVISION	DR.	CK.	DATE	SYM	REVISION	DR.	CK.	DATE	SYM	REVISION	DR.	CK.
					11-1-66	J	97F74 ADDED	JJ	JA	3-8-65	D	386288 WAS 388288		JA
					10-5-65	H	WAS 388232	RC	JG	3-8-65	C	SS WAS ST		JA
					10-5-65	G	WAS 384752	RC	JA	3-8-65	B	WAS 384752		JA
					11-1-65	F	97F74 REMOVED	JJ	JA	3-8-65	A	USAGE REVISED		JA

CHART	FRONT SPRING USAGE
DATE	FEB. 1, 1965
DR. BY	GARY E. CRANDELL
CHECKED	E. BREEDING
APPR.	
APPR.	
FIRST USED	1966
SERIES	A
REV.	
PAGE	3-1.2
PART NO.	392172

OLDSMOBILE DIVISION GENERAL MOTORS CORPORATION LANSING — MICHIGAN

USAGE

STEERING KNUCKLE ASSEMBLIES

CODE	STEERING	MODEL	FIRST TYPE PART NO.	(F) SECOND TYPE PART NO.
OE	MANUAL	5200	391660-R. 391661-L.	
OC	POWER	5200	391662-R. 391663-L.	
OM	MANUAL	5200 WITH J-56	391664-R. 391665-L.	
OL	POWER	5200 WITH J-56	391666-R. 391667-L.	
OF	MANUAL	54, 56, 58	390692-R. (A) 390693-L.	
OA	POWER	84, 86 54, 56, 58	391668-R. 391669-L.	
OJ	MANUAL	56, 58 WITH J-56	387964-R. (B) 387965-L.	394970-R. 394971-L.
OR	POWER	56, 58, 84 WITH J-56	391670-R. 391671-L.	394978-R. 394979 L.
OH	MANUAL	56, 58 WITH B01-B07	387970-R. (C) 387971-L.	394972-R. 394973-L.
OG	POWER	56, 58 WITH B01-B07	391672-R. 391673 L.	394980-R. 394981-L.
OS	MANUAL	56, 58 WITH Y-75	387974-R. (D) 387975-L.	394974-R. 394975-L.
ON	POWER	56, 58 WITH Y-75	391674-R. 391675-L.	394982-R. 394983-L.
OT	MANUAL	56, 58 WITH Y-75 & J-56	387978-R. (E) 387979-L.	394976-R. 394977-L.
OP	POWER	56, 58 WITH Y-75 & J-56	391676-R. 391677-L.	394984-R. 394985-L.
OB		ALL F-85 EXC. EXT. WAGONS	383072-R. 383073-L.	
OD		ALL F-85 EXT. WAGONS	386088-R. 386089-L.	
OK		ALL F-85 WITH J-56	389164-R. 389165-L.	

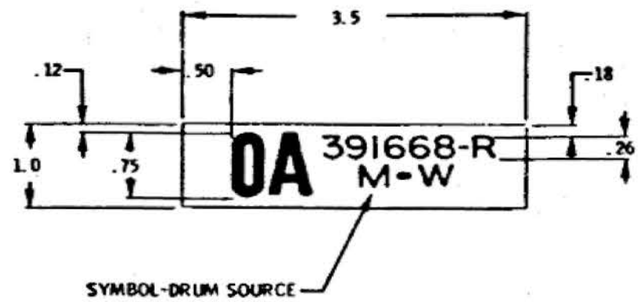

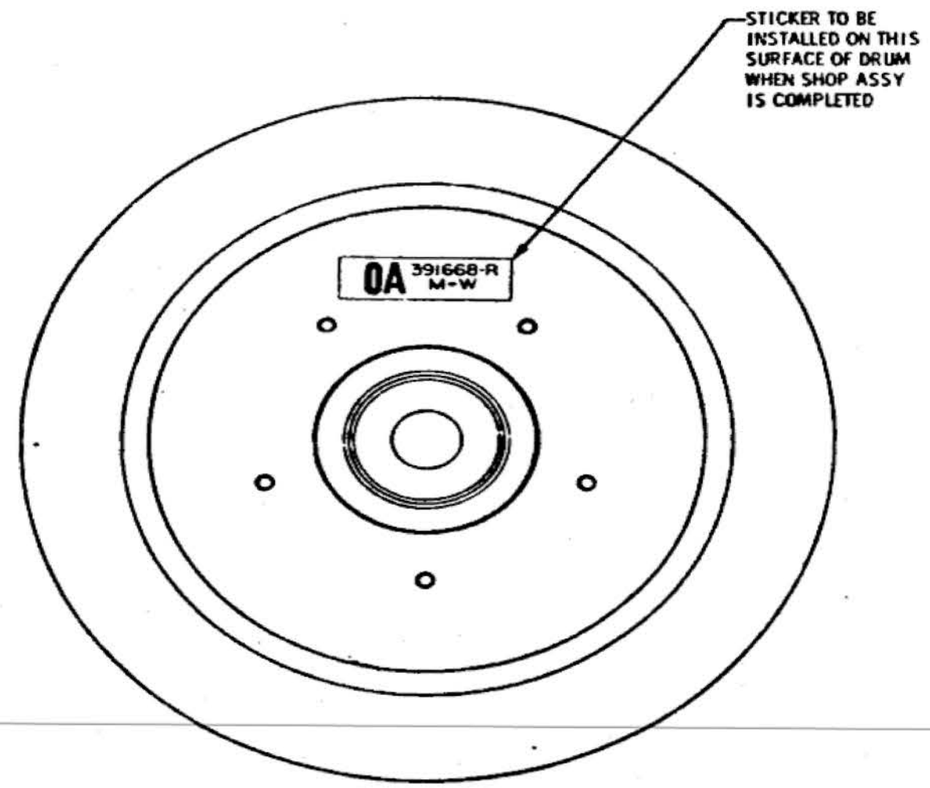

DATE	SYM	REVISION	DR	CK	DATE	SYM	REVISION	DR.	CK.	DATE	SYM	REVISION	DR.	CK.
											E	WAS 393224-5		
											D	WAS 393222-5		
											C	WAS 393218-5		
											B	WAS 393220-1		
					8-26-65	F	SECOND TYPE NO ADDED				A	WAS 393214-5		

CHART - KNUCKLE SHOP ASSEMBLY CODE

DATE AUGUST 18, 1965
DR. BY J.E. CASLER
CHECKED J.L. GRAY
APPR.
APPR. G.F. Carter

FIRST USED 1966

Oldsmobile GRAPHIC ILLUSTRATION

SERIES A-B-C

REF.

PAGE 3-2.5

PART NO. 393658

△1 30-50 LB. FT. - AFTER REACHING MIN. TORQUE REQ'D., NUT MUST ALWAYS BE TIGHTENED FURTHER, NEVER BACKED OFF, TO INSERT COTTER PIN.

△2 35-45 LB. FT.

△3 120-150 LB. FT.

Ⓒ △4 15-25 LB. FT. - AFTER SETTING WHEEL ALIGNMENT AND TRIM HEIGHTS.

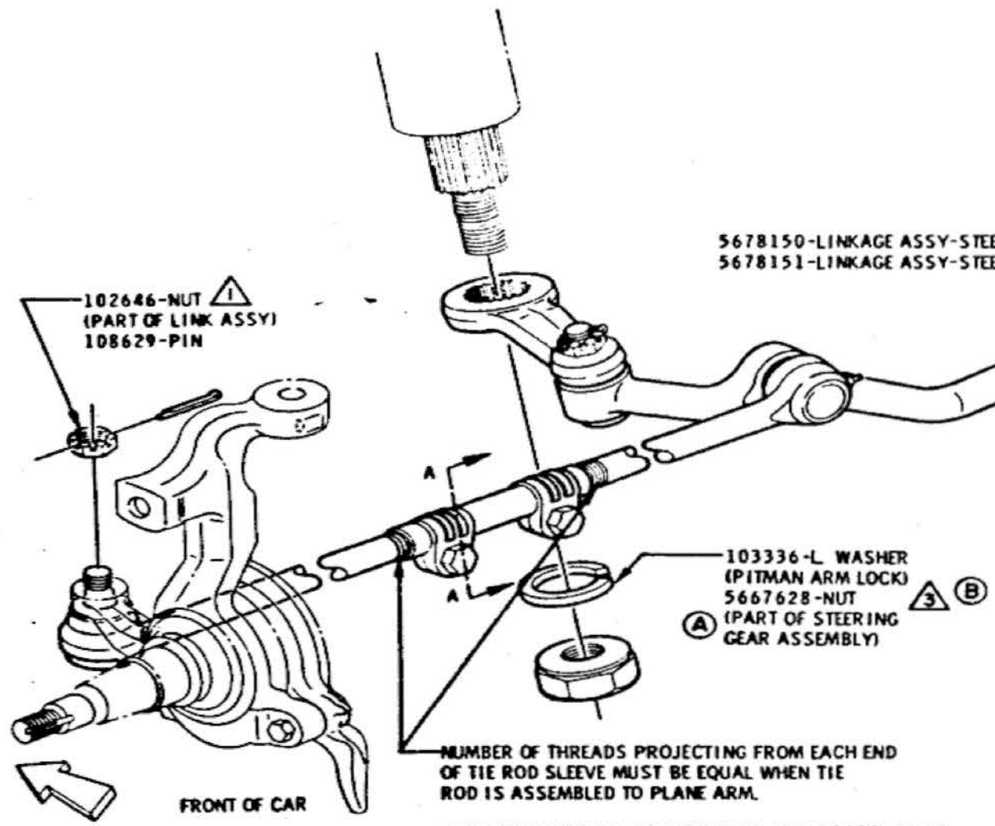

NUMBER OF THREADS PROJECTING FROM EACH END OF TIE ROD SLEEVE MUST BE EQUAL WHEN TIE ROD IS ASSEMBLED TO PLANE ARM.

WHEN MAKING FINAL ADJUSTMENTS OF TIE RODS, MAKE SURE THAT THE ROD END HOUSINGS ARE AT RIGHT ANGLES TO STEERING KNUCKLE ARMS IN SIDE VIEW.

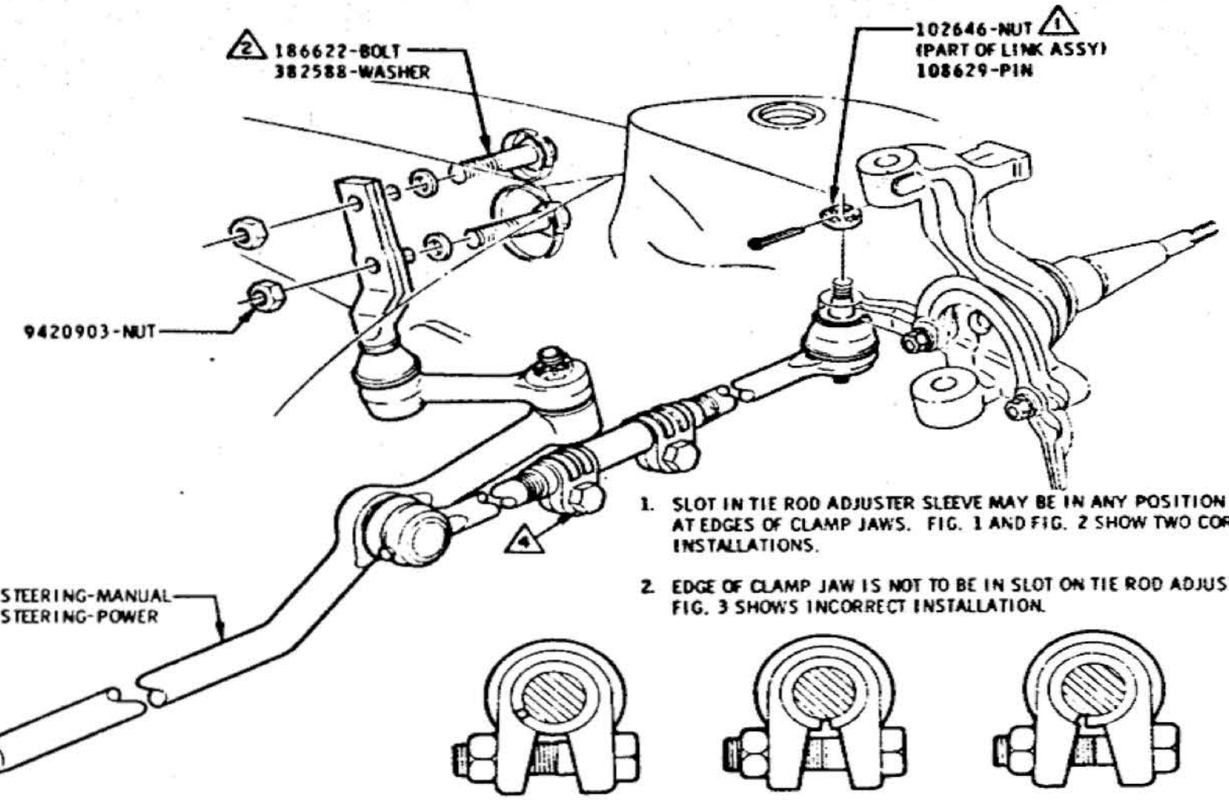

1. SLOT IN TIE ROD ADJUSTER SLEEVE MAY BE IN ANY POSITION EXCEPT AT EDGES OF CLAMP JAWS. FIG. 1 AND FIG. 2 SHOW TWO CORRECT INSTALLATIONS.

2. EDGE OF CLAMP JAW IS NOT TO BE IN SLOT ON TIE ROD ADJUSTER SLEEVE. FIG. 3 SHOWS INCORRECT INSTALLATION.

FIG. 1 FIG. 2 FIG. 3

POSITION OF TIE ROD ADJUSTER SLEEVE AND CLAMP

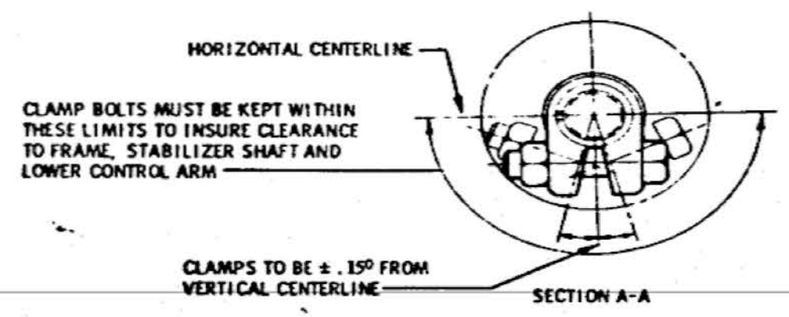

SECTION A-A

STEERING LINKAGE

DATE	SYM	REVISION	DR.	CK.	DATE	SYM	REVISION	DR.	CK.	DATE	SYM	REVISION	DR.	CK.
										10-19-65	C	TORQUE ADDED		
										6-17-65	B	TORQUE SYMBOL ADDED		
										5-25-65	A	NOTE ADDED		

INSTALLATION **FRONT SUSPENSION**

DATE MARCH 10, 1965
DR. BY Goodwin
CHECKED
APPR.
APPR.

FIRST USED 1966 — Oldsmobile Service ILLUSTRATION — SERIES A — REF.

PAGE 3-2.1

PART NO. 589998

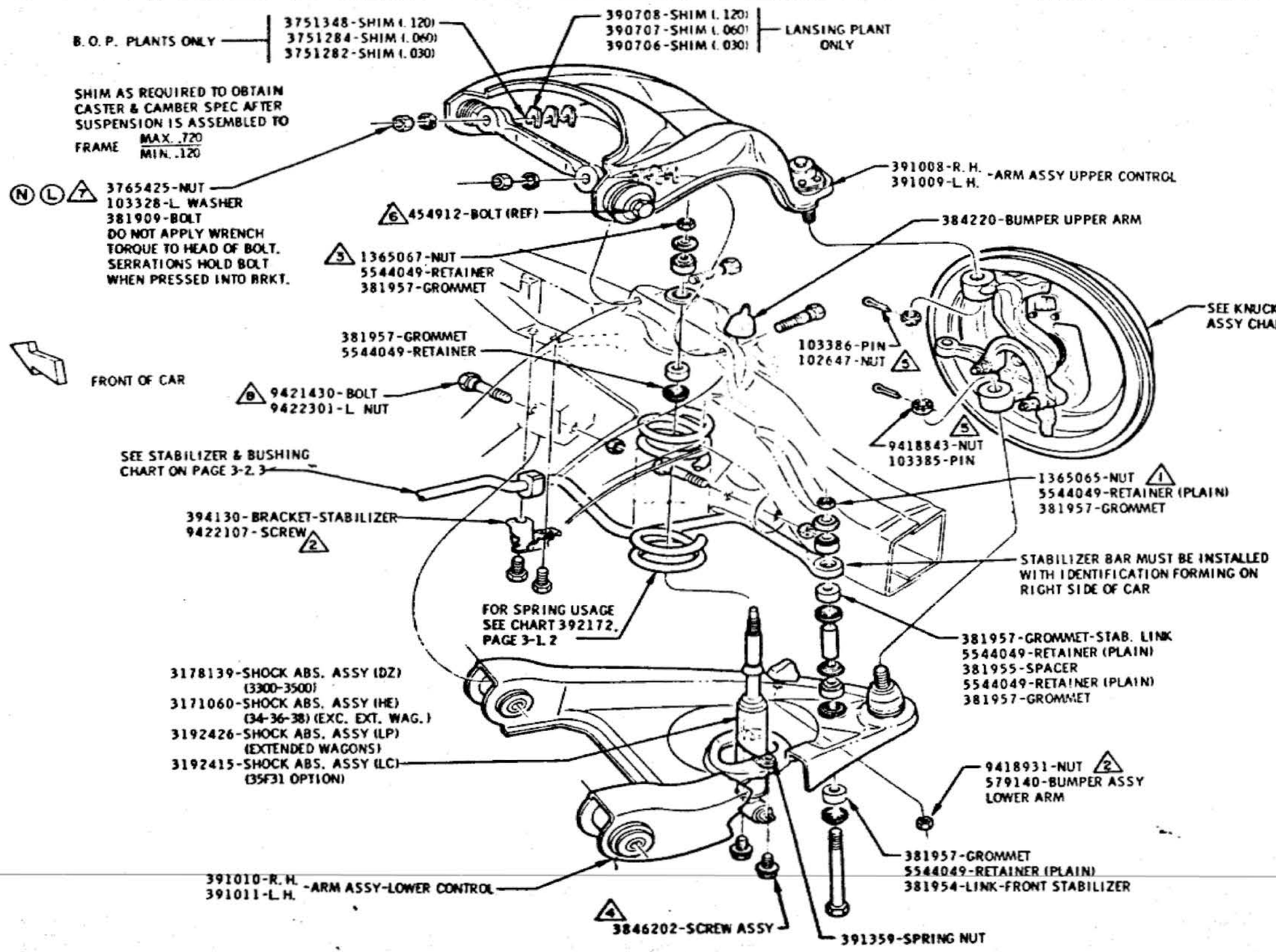

KNUCKLE SHOP ASSY

PART NO.	USAGE	CODE
383072-R. H. 383073-L. H.	ALL EXCEPT EXT. WAGONS	OB
386088-R. H. 386089-L. H.	EXT. WAGONS	OD
389164-R. H. 389165-L. H.	J56	OK

1 60-120 LB. IN.
2 120-180 LB. IN.
3 60-120 LB. IN.
4 15-24 LB. FT.
5 40 LB. FT. MIN. (NUT MUST ALWAYS BE TIGHTENED FURTHER, NEVER BACKED OFF, TO INSERT C'PIN)
6 45-60 LB. FT. - WHEN CAR IS AT CURB HEIGHT
7 55-75 LB. FT. M P
8 65-85 LB. FT. - WHEN CAR IS AT CURB HEIGHT

NOTE:
SPRINGS SHOULD BE USED EITHER LOW RANGE ON BOTH SIDES OF CAR OR HIGH RANGE ON BOTH SIDES. LOW RANGE DENOTED BY BLACK CIRCLE AROUND BROADCAST LETTERS.

CONTROL ARMS, KNUCKLE, SHOCKS & SPRINGS

DATE	SYM	REVISION	DR.	CK.	DATE	SYM	REVISION	DR.	CK.	DATE	SYM	REVISION	DR.	CK.
3-1-66	P	CHANGE "M" REINSTATED			1-4-66	K	WAS 10-20 LB.FT.			8-18-65	E	WAS 387184-BRACKET		
5-1-66	N	CHANGE "L" REINSTATED			10-18-65	J	WAS 393901-L. NUT			7-20-65	D	WAS 9422301-NUT		
2-7-66	M	WAS 65-75 LB. FT.			10-1-65	H	WAS 3186934 (E6)			5-24-65	C	3186934 WAS 3171061		
		ELIMINATED L. WASHER			9-9-65	G	WAS 3186966 (E2)			5-24-65	B	3178139 WAS 3171059		
2-7-66	L	WAS-3765425-NUT			9-9-65	F	391012, 13 CANCELLED			4-27-65	A	WAS PAGE 3-2.2		

INSTALLATION **FRONT SUSPENSION**

DATE MARCH 9, 1965
DR. BY MODERN
CHECKED
APPR.
APPR.

FIRST USED 1966 — Oldsmobile ILLUSTRATION

SERIES A — REF.

PAGE 3-2.2

PART NO. 589998

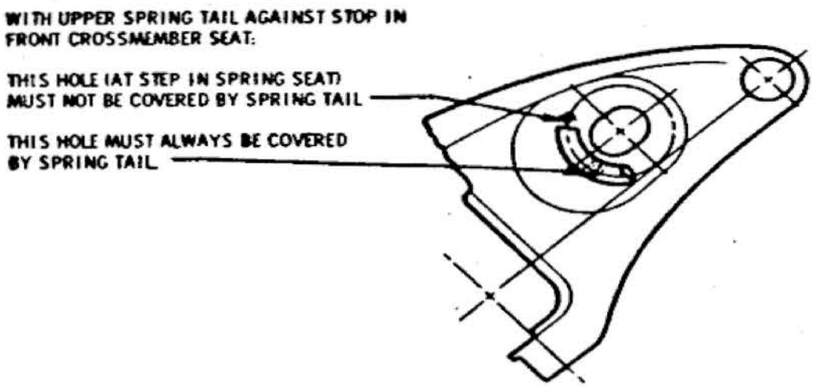

VIEW SHOWING POSITION OF SPRING TAIL AFTER INSTALLATION

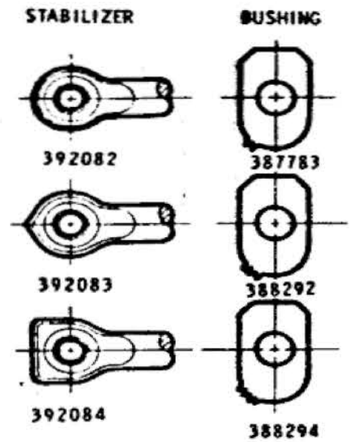

FRONT STABILIZER SHAFT AND MATCHING BUSHING IDENTIFICATION

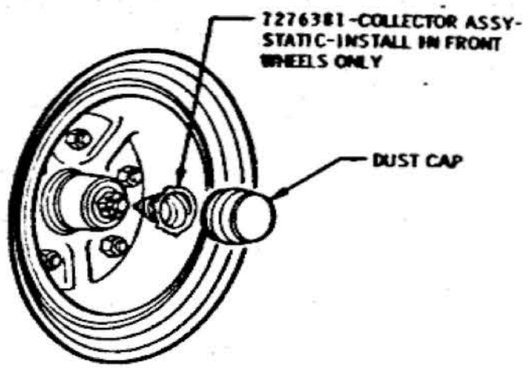

INSTALLATION OF STATIC COLLECTOR FOR CARS WITH RADIO

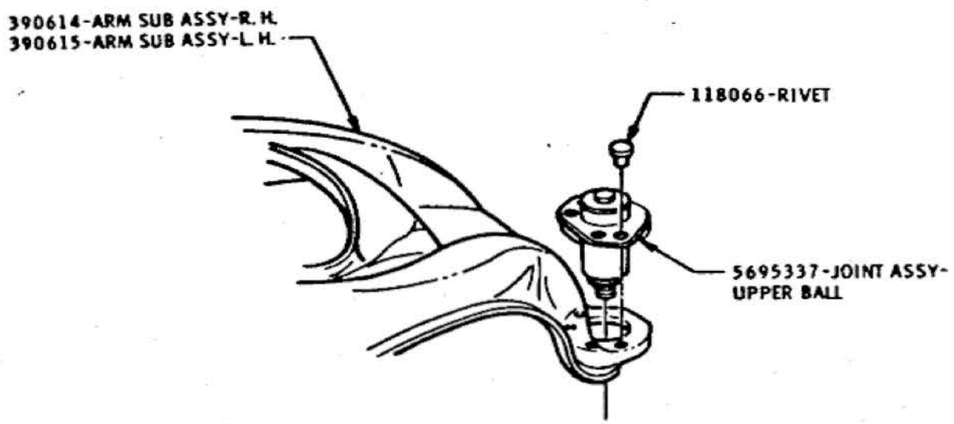

THIS VIEW FOR G.M. ASSEMBLY DIV. ONLY (A)

CHART - FRONT STABILIZER SHAFT & BUSHING

STABILIZER PART NO.	STAB. DIA.	BUSHING PART NO.	GRP.	
392082	.812	387783	3G	33 & 3500
392083	.875	388292	3G	34, 36, 3800 EXC. EXT. WAG. & 3867
392084	.937	388294	3G	EXT. WAGONS & 3867
			C60	34-36-3800
			F58	ALL MODELS

NOTE: INSTALL BUSHINGS WITH SLIT TOWARD FRONT OF CAR

(A) STABILIZER CHART & MISCELLANEOUS ITEMS

DATE	SYM	REVISION	DR.	CK.	DATE	SYM	REVISION	DR.	CK.	DATE	SYM	REVISION	DR.	CK.
										3-26-65	A	TITLES REVISED		

INSTALLATION FRONT SUSPENSION

DATE MARCH 4, 1965 | DR. BY ED ROE | CHECKED | APPR. | APPR.

FIRST USED 1966 | Oldsmobile ILLUSTRATION | SERIES A | REF. | PAGE 3-23 | PART NO. 589998

OLDSMOBILE PRODUCT INFORMATION MANUAL

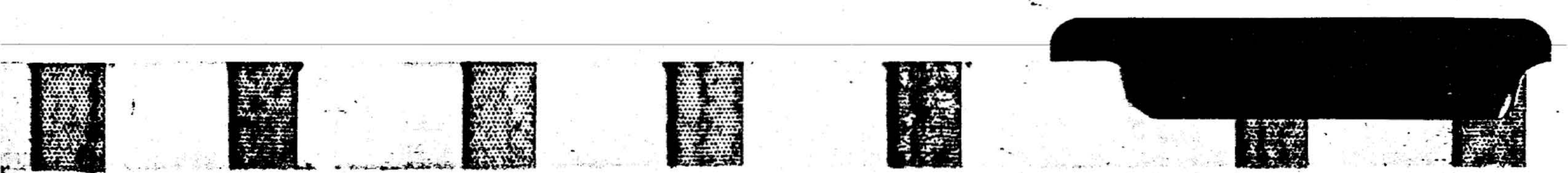

4 – REAR SUSPENSION

GROUP 4 - REAR SUSPENSION

392174 CHART-REAR SPRING USAGE---------- 4-1.2
392400 CHART-REAR AXLE USAGE (SHEET 1)----------4-1.3
392400 CHART-REAR AXLE USAGE (SHEET 2)----------4-1.4
392400 CHART-REAR AXLE USAGE (SHEET 3)----------4-1.5
392400 CHART-REAR AXLE USAGE (SHEET 4)----------4-1.6

PROPELLER SHAFT----------4-2.1
CONTROL ARMS, SHOCKS & SPRINGS----------4-2.2
STAB. ASSY., AXLE BUMPER, SPACER AND EXT. S.W. ----------4-2.3

OLDSMOBILE DIVISION GENERAL MOTORS CORPORATION LANSING — MICHIGAN

REAR SUSPENSION SPRING USAGE – 1966 F-85

SERIES	MODEL	SM-FS TRANS. 48 STD. CAR	JETAWAY TRANS. M33	SM-FS & JETAWAY TRANS. 35W29 (R)	97F74 & 98F74 EXPORT (ALL) (S)	35B01 POLICE	35B07 POLICE	G51 TRAILER HAULING	G67 SUPERLIFT	MODEL	SERIES
33300 (L6)	07	9773999 PD	9773999 PD	NA	9775691 PI	9785060 NH	9785060 NH	9776056 PL	9776457 PU	07	33300 (L6)
	35	9773806 NF	9773806 NF	NA	9775692 PJ	9774455 PH	NA	9774694 PF	9776458 PV	35	
	69	9773808 PB	9773808 PB	NA	9776244 PQ	9785060 NH	9785060 NH	9776056 PL	9773999 PD	69	
33400 (V8)	07	9775691 PI	9773999 PD	9785060 NH	9775691 PI	9785060 NH	9785060 NH	9776056 PL	9776457 PU	07	33400 (V8)
	35	9773806 NF	9773806 NF	NA	9775692 PJ	9774455 PH	NA	9774694 PF	9776458 PV	35	
	55	9775927 PO (N)	9775927 PO (N)	NA	9774693 PE	9774455 PH	NA	9774694 PF	9773806 NF	55	
	65	9774693 PE (P)	9774693 PE (P)	NA	9776246 PS	9774455 PH	NA	9776246 PS	9775927 PO	65	
	69	9775691 PI	9773999 PD	NA	9775691 PI	9785060 NH	9785060 NH	9776056 PL	9773999 PD	69	
33500 (L6)	17	9773999 PD	9773999 PD	NA	9775691 PI	9785060 NH	9785060 NH	9776056 PL	9776457 PU	17	33500 (L6)
	35	9773806 NF	9773806 NF	NA	9775692 PJ	9774455 PH	NA	9774694 PF	9776458 PV	35	
	39	9773808 PB	9773808 PB	NA	9776244 PQ	9785060 NH	9785060 NH	9776056 PL	9773999 PD	39	
	69	9773808 PB	9773808 PB	NA	9776244 PQ	9785060 NH	9785060 NH	9776056 PL	9773999 PD	69	
33600 (V8)	17	9775691 PI	9773999 PD	9785060 NH	9775691 PI	9785060 NH	NA	9776056 PL	9776457 PU	17	33600 (V8)
	35	9773806 NF	9773806 NF	NA	9775692 PJ	9774455 PH	NA	9774694 PF	9776458 PV	35	
	39	9775691 PI	9773999 PD	NA	9775691 PI	9785060 NH	9785060 NH	9776056 PL	9773999 PD	39	
	69	9775691 PI	9773999 PD	NA	9775691 PI	9785060 NH	9785060 NH	9776056 PL	9773999 PD	69	
							NA				
33800 (V8)	07	9775691 PI	9773999 PD	9785060 NH	9775691 PI	9785060 NH	NA	9776056 PL	9776457 PU	07	33800 (V8)
	17	9775691 PI	9773999 PD	9785060 NH	9775691 PI	9785060 NH	NA	9776056 PL	9776457 PU	17	
	39	9775691 PI	9773999 PD	NA	9775691 PI	9785060 NH	NA	9776056 PL	9773999 PD	39	
	55	9775927 PO (N)	9775927 PO (N)	NA	9774693 PE	9774455 PH	NA	9774694 PF	9773806 NF	55	
	65	9774693 PE (P)	9774693 PE (P)	NA	9776246 PS	9774455 PH	NA	9776246 PS	9775927 PO	65	
	67	9775691 PI	9773999 PD	9785060 NH	9775691 PI	NA	NA	9776056 PL	9776457 PU	67	
	69	9775691 PI	9773999 PD	NA	9775691 PI	9785060 NH		9776056 PL	9773999 PD	69	

SPRINGS SHOULD BE USED EITHER LOW RANGE ON BOTH SIDES OF CAR OR HIGH RANGE ON BOTH SIDES OF CAR.

TAPE IDENTIFICATION:-

HIGH LOAD RANGE-PLAIN IDENTIFICATION.
LOW LOAD RANGE-BLACK CIRCLE AROUND CODE LETTER.

FOR SPRING DETAIL
SEE DRAWING 9773805

DATE	SYM	REVISION	DR.	CK.	DATE	SYM	REVISION	DR.	CK.	DATE	SYM	REVISION	DR.	CK.
										11-66	S	97F74 ADDED	JJ	

CHART – REAR SPRING USAGE

DATE JAN. 20, 1965
DR. BY J.E. CASLER
CHECKED
APPR.
APPR.

FIRST USED 1966
ILLUSTRATION
SERIES A
REF.
PAGE 4-1.2
PART NO. 392174

OLDSMOBILE DIVISION GENERAL MOTORS CORPORATION LANSING — MICHIGAN

STD. TYPE DIFFERENTIAL (EXC. 3455, 65, 3855, 65)									
EQUIPMENT	AXLE ASSY	CODE	RATIO	GEARS	AXLE SUB ASSY SHOWN ON CHART		SHAFT ASSY AXLE	BRAKE ASSY LH, RH	DRUM ASSY BRAKE
					BUICK	PONTIAC 9782434			
EXC. J56	392401	SA	2.78	39-14	1376672	9784132	393246 (F) OR 393906	5467122 5467123	382306 OR 382307
	392402	SC	3.08	40-13	1376669	9782437			
	392403	SE	3.23	42-13	1376666	9782438			
	392404	SJ	3.55	39-11	1376662	9782440			
	392405	TG	3.90	39-10		9782441			
WITH J56	392406	SK	2.78	39-14	1376672	9784132	393246 (F) OR 393906	5465492 5465493	383829
	392407	SQ	3.08	40-13	1376669	9782437			
	392408	SV	3.23	42-13	1376666	9782438			
	392409	SX	3.55	39-11	1376662	9782440			
	392410	TJ	3.90	39-10		9782441			
STD. TYPE DIFFERENTIAL (3455, 65, 3855, 65)									
EXC. J56	392411	SM	3.08	40-13	1376667		393247 (G) OR 393908	5467132 5467133	1368329
	392412	SO	3.23	42-13	1376664				
	392413	SU	3.55	39-11	1376660				
WITH J56	392414	SG	3.08	40-13	1376667		393247 (G) OR 393908	5465562 5465563	1368329
	392415	TC	3.23	42-13	1376664				
	392416	TE	3.55	39-11	1376660				

LOCKING TYPE DIFFERENTIAL (EXC. 3455, 65, 3855, 65)									
EQUIPMENT	AXLE ASSY	CODE	RATIO	GEARS	AXLE SUB ASSY SHOWN ON CHART		SHAFT ASSY AXLE	BRAKE ASSY LH, RH	DRUM ASSY BRAKE
					BUICK	PONTIAC 9783380			
EXC. J56	392417	SB	2.78	39-14	1376671	9784134	393246 (F) OR 393906	5467122 5467123	382306 OR 382307
	392418	SD	3.08	40-13	1376670	9783374			
	392419	SF	3.23	42-13	1376665	9783375			
	392420	SJ	3.55	39-11	1376661	9783377			
	392421	TH	3.90	39-10		9783378			
(J)	397373	TT	4.11	37-9		397374	397375		
WITH J56	392422	SL	2.78	39-14	1376671	9784134	393246 OR (F) 393906	5465492 5465493	383829
	392423	SR	3.08	40-13	1376670	9783374			
	392424	SW	3.23	42-13	1376665	9783375			
	392425	SZ	3.55	39-11	1376661	9783377			
	392426	TK	3.90	39-10		9783378			
LOCKING TYPE DIFFERENTIAL (3455, 65, 3855, 65)									
EXC. J56	392427	SN	3.08	40-13	1376668		393247 OR 393908 (G)	5467132 5467133	1368329
	392428	SP	3.23	42-13	1376663				
	392429	SY	3.55	39-11	1376659				
WITH J56	392430	SH	3.08	40-13	1376668		393247 OR 393908 (G)	5465562 5465563	1368329
	392431	TD	3.23	42-13	1376663				
	392432	TF	3.55	39-11	1376659				

THE FOLLOWING LIST OF COMPONENT PARTS ARE REQUIRED FOR USE IN CONJUNCTION WITH A BUICK OR PONTIAC AXLE SUB-ASSEMBLY OF SELECTED RATIO FROM THE ABOVE CHARTS TO COMPLETE AXLE ASSEMBLY FOR USE ON PRODUCTION LINE OR ASSEMBLY PLANTS.

EXCEPT				
3455, 65	3455, 65			
3855, 65	3855, 65			
(**)	(**)	1	AXLE SUB ASSEMBLY	- REAR (SELECT RATIO FROM CHART)
SEE CHART	SEE CHART	1	BRAKE ASSEMBLY	- REAR - L.
SEE CHART	SEE CHART	1	BRAKE ASSEMBLY	- REAR - R.
1367324		2	GASKET	- BRAKE TO AXLE
9776221		*	GASKET	- BRAKE TO AXLE (OPT)
384944		*	GASKET	- BRAKE TO AXLE (OPT)
	1368330	4	GASKET	- BRAKE & BEARING RETAINER TO AXLE
9776453	414999	8	BOLT	- BRAKE TO AXLE
	1368360	*	BOLT	- BRAKE TO AXLE (OPT)
385186	385186	8	NUT	- BRAKE TO AXLE
SEE CHART	SEE CHART	2	SHAFT ASSEMBLY	- REAR AXLE
SEE CHART	SEE CHART	2	DRUM ASSEMBLY	- REAR BRAKE
358501	358501	4	NUT (ASSEMBLY PLANTS)	- DRUM TO AXLE
1365334		2	GASKET	- OUTER BEARING RETAINER
384939		*	GASKET	- OUTER BEARING RETAINER (OPT)
9774551		*	GASKET	- OUTER BEARING RETAINER (OPT)
387621	387621	2	CABLE ASSEMBLY	- REAR PARKING BRAKE
9416029	9416029	4	NUT (SPRING/LANSING ONLY)	- DRUM TO AXLE
*** 3820840	3820840	1	VENT ASSEMBLY	- REAR AXLE

*** VENT ASSEMBLY 3820840 SUPPLIED AND INSTALLED BY BOP AND LANSING AT FINAL ASSEMBLY. REMOVE AND DISCARD SHIPPING PLUG 544116 INSTALLED BY AXLE VENDOR.

(E) ON ALL AXLE ASSEMBLIES COMPLETE, BUILT WITH BUICK AXLE SUB-ASSEMBLIES, THE BRAKE HOSE BRACKET 1361970 MUST BE REPLACED WITH 9782655.

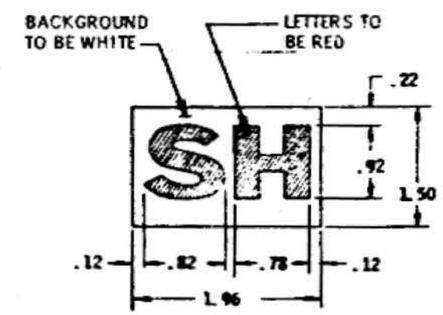

TYPICAL TAPE IDENTIFICATION

THIS REPRESENTS AXLE AS SHIPPED TO B. O. P. ASSEMBLY PLANT BY VENDOR OR AS FABRICATED BY OLDSMOBILE FOR LANSING PLANT. (**) PURCHASED FOR LANSING PLANT ONLY. FOR ASSEMBLY INFORMATION, SEE 392433 MANUFACTURER'S IDENTIFICATION MUST APPEAR ON THIS PART. LOCATION TO BE APPROVED BY ENGINEERING DEPARTMENT. OMISSION REQUIRES APPROVAL OF PURCHASING DIVISION.

PRODUCTION SAMPLE TO BE TESTED AND APPROVED BY PRODUCT ENGINEERING FOR OLDSMOBILE PARTS.

SHEET 1 OF 4

DATE	SYM	REVISION	DR.	CK.	DATE	SYM	REVISION	DR.	CK.
4-22-66	J	397373 ADDED	KL	[illegible]	9-3-65	E	NOTE ADDED	KL	[illegible]
4-6-66	H	WAS SHEET 1 OF 3	CG	JA	5-11-65	D	393247 WAS 386259	CG	JA
4-6-66	G	393908 ADDED	CG	JA	5-11-65	C	393246 WAS 386259	CG	JA
4-6-66	F	393906 ADDED	CG	JA	3-15-65	B	SL WAS SJ	GC	JA
					3-15-65	A	PART NOS ADDED	GC	JA

CHART REAR AXLE USAGE

DATE FEB. 17 1965
DR. BY J.L. GRAY
CHECKED H. PAGE
APPR. R.C. STEMPEL
APPR.

FIRST USED 1966
SERIES A
REF.
PAGE 4-1.3
PART NO. 392400

OLDSMOBILE DIVISION

GENERAL MOTORS CORPORATION
LANSING — MICHIGAN

REAR AXLE	ENGINE USAGE (CUBIC INCHES, CYLINDERS, CARBURETOR, COMPRESSION) (W)							TRANSMISSION USAGE				AXLE RATIO USED ON MODEL						
	RELEASE GROUP	250 L-6 1 BBL LOW	330 V-8 2 BBL LOW	330 V-8 4 BBL LOW	330 V-8 4 BBL HIGH	400 V-8 4 BBL HIGH	400 V-8 3-2 BBL HIGH	FULLY SYNCHRONIZED 3 SPEED	FULLY SYNCHRONIZED 4 SPEED WIDE RATIO	FULLY SYNCHRONIZED 4 SPEED CLOSE RATIO	JETAWAY	33300 STANDARD 07, 35, 69	33400 STANDARD 07, 35, 69	33400 STANDARD 55, 65	33500 DELUXE 17, 35 39, 69	33600 DELUXE 17, 35, 39, 69	33800 CUTLASS 07, 17, 39, 67, 69	33800 CUSTOM 55, 65
STANDARD	4A-1	S						S				2.78	N.A.	N.A.	2.78	N.A.	N.A.	N.A.
STANDARD	4A-1		S					S, M-14	M-20			N.A.	3.08	3.23	N.A.	3.08	N.A.	3.23
STANDARD	4A-1				S			S, M-14	M-20			N.A.			N.A.		3.23	
(Z) AUTOMATIC	M-31	S									M-31	2.78			2.78			
(Z) AUTOMATIC	M-33		S								M-33, M-34		2.78	3.08		2.78		3.08
(Z) AUTOMATIC	M-33				S						M-33, M-34						3.08	
(AA)																		
EXPORT	98	L-90						S			M-31	2.78	N.A.	N.A.	2.78	N.A.	N.A.	N.A.
EXPORT	98		L-90					S, M-14	M-20			N.A.	3.08	3.23	N.A.	3.08	N.A.	3.23
EXPORT	98			L-90				S, M-14	M-20			N.A.			N.A.		3.23	
EXPORT	98		L-90								M-33 M-34	N.A.	2.78	3.08	N.A.	2.78		3.08
EXPORT	98			L-90							M-33 M-34	N.A.			N.A.		3.08	
(AB) 4 SPEED CLOSE RATIO	M-21		S L-90	L-73 L-90	S L-74					M-21		N.A. (AE)	3.90		N.A. (AE)	3.90	3.90	
4 SPEED CLOSE RATIO	M-21		S L-90	N.A.	L-74					M-21				3.55				3.55
442 PERFORMANCE PACKAGE	W-29					L-78	L-69	M-13, M-14				N.A.	3.23 (3)	N.A.	N.A.	3.23 (4)	3.23 (5)	N.A.
442 PERFORMANCE PACKAGE	W-29					L-78	L-69		M-20			N.A.	3.55 (3)	N.A.	N.A.	3.55 (4)	3.55 (5)	N.A.
442 PERFORMANCE PACKAGE	W-29					L-78	L-69			M-21		N.A.	3.90 (3)	N.A.	N.A.	3.90 (4)	3.90 (5)	N.A.
442 PERFORMANCE PACKAGE	W-29					L-78	N.A.				M-32	N.A.	3.23 (3)	N.A.	N.A.	3.23 (4)	3.23 (5)	N.A.
LOW COMPRESSION ENG.	4A-1			L-73				S, M-14	M-20			N.A.	3.23	N.A.	N.A.	3.23	3.23	N.A.
LOW COMPRESSION ENG.	M-33			L-73							M-33 M-34	N.A.	3.08	3.08 (X)	N.A.	3.08	3.08	3.08 (X)
HIGH COMPRESSION ENG.	4A-1				L-74			S, M-14	M-20			N.A.	3.23	3.23	N.A.	3.23	3.23 (Y)	3.23
HIGH COMPRESSION ENG.	M-33				L-74						M-33 M-34	N.A.	3.08	3.08	N.A.	3.08	3.08 (X)	3.08
AIR CONDITIONING	C-60	S, L-90						S			M-31	3.08			3.08			
(AC) AIR CONDITIONING	C-60		S L-90	L-73 L-90	S L-74	L-78	L-69			M-21			3.55			3.55	3.55	
		BALANCE OF C-60 SAME AS STANDARD USAGE SHOWN ABOVE																

NOTES: AXLE - TRANSMISSION COMBINATION

FULLY SYNCHRONIZED 3 SPEED (STD., M-13, M-14) 2.78, 3.08, 3.23, 3.55, 3.90, 4.11, 4.33
FULLY SYNCHRONIZED 4 SPEED WIDE RATIO (M-20) 3.08, 3.23, 3.55.
FULLY SYNCHRONIZED 4 SPEED CLOSE RATIO (M-21) 3.55, 3.90, 4.11, 4.33.
(AD) L-6 JETAWAY (M-31) 2.78, 3.08, 3.23.
V-8 JETAWAY (M-32, M-33, M-34) 2.78, 3.08, 3.23, 3.55, 3.90, 4.11, 4.33

S - STANDARD
N.A. - NOT AVAILABLE
N.R. - NOT RECOMMENDED USAGE

(1) AVAILABLE ALL EXCEPT CONVERTIBLE (67) MODELS.
(2) AVAILABLE ALL EXCEPT STATION WAGON (35) MODELS.
(3) AVAILABLE ONLY ON COUPE (07) MODEL.
(4) AVAILABLE ONLY ON COUPE (17) MODEL.
(5) AVAILABLE ALL EXCEPT SEDAN (39, 69) MODELS.

SHEET 2

DATE	SYM	REVISION	DR.	CK.	DATE	SYM	REVISION	DR.	CK.	DATE	SYM	REVISION	DR.	CK.
2-22-66	AE	USAGE REVISED			2-22-66	AA	STANDARD LINE REM'D.			9-7-65	V2	M-34 ADDED	JG	JA
2-22-66	AD	3.55 & 3.90 RATIO REM'D			1-6-66	Y	3.23 RATIO ADDED	CG	JA	9-7-65	U	RATIO USAGE REVISED	JG	JA
2-22-66	AC	LINE ADDED			1-6-66	X2	3.08 RATIO ADDED	CG	JA	9-7-65	T	L-90 ADDED	JG	JA
2-22-66	AB	4SP CL RATIO LINE REM'D			12-8-65	W	ENGINE USAGE ADDED	JG	JA	8-27-65	S	EXPORT AXLES ADDED	JG	JA
											R	M-21 WAS 3.55 RATIO	JG	JG

CHART REAR AXLE USAGE

DATE FEB. 17, 1965
DR. BY R.R. STANLAKE
CHECKED H. PAGE
APPR. R.C. STRAMEL
APPR.

FIRST USED 1966
SERIES A
REF.
ILLUSTRATION
PAGE 4-1.4
PART NO. 392400

OLDSMOBILE DIVISION

GENERAL MOTORS CORPORATION
LANSING — MICHIGAN

	REAR AXLE	ENGINE USAGE (CUBIC INCHES, CYLINDERS, CARBURETOR, COMPRESSION)							TRANSMISSION USAGE				AXLE RATIO USED ON MODEL						
									FULLY SYNCHRONIZED										
		RELEASE GROUP	250 L-6 1 BBL LOW	330 V-8 2 BBL LOW	330 V-8 4 BBL LOW	330 V-8 4 BBL HIGH	400 V-8 4 BBL HIGH	400 V-8 3-2 BBL HIGH	3 SPEED	4 SPEED WIDE RATIO	4 SPEED CLOSE RATIO	JETAWAY	33300 STANDARD 07, 35, 69 (AD)	33400 STANDARD 07, 35, 69	33400 STANDARD 55, 65	33500 DELUXE 17, 35, 39, 69	33600 DELUXE 17, 35, 39, 69	33800 CUTLASS 07, 17, 39, 67, 69	33800 CUSTOM 55, 65
(AF)	POLICE-CITY	B-01	S						S			M-31	3.08			3.08			
(AG)	POLICE-CITY	B-01		S		S			SM-14	M-20		M-34 M33		3.08	3.06		3.08	3.08 ①	3.06
	POLICE-CITY	B-01				L-76			S, M-14				N.A.	3.23	3.23	N.A.	3.23	3.23 ①	3.23
	POLICE-CITY	B-01				L-76						M-34	N.A.	3.23	3.23	N.A.	3.23	3.23 ①	3.23
	POLICE-CITY	B-01					L-77		M-13, M-14	M-20			N.A.	3.55 ②	N.A.	N.A.	3.55 ②	3.55 ①	N.A.
	POLICE-CITY	B-01					L-77				M-21		N.A.	3.90 ②	N.A.	N.A.	3.90 ②	3.90 ①	N.A.
	POLICE-CITY	B-01					L-77					M-32	N.A.	3.23 ②	N.A.	N.A.	3.23 ②	3.23 ①	N.A.
(AH)	POLICE HIGHWAY	B-07	S						S			M-31	3.08 ②			3.08 ②			
(AJ)	POLICE-HIGHWAY	B-07		S					S, M-14	M-20		M-33, M-34		3.08 ②	N.A.		3.08 ②	N.A.	N.A.
	POLICE-HIGHWAY	B-07				L-76			S, M-14	M-20			N.A.	3.23 ②	N.A.	N.A.	3.23 ②	N.A.	N.A.
	POLICE-HIGHWAY	B-07				L-76						M-34	N.A.	3.23 ②	N.A.	N.A.	3.23 ②	N.A.	N.A.
	POLICE-HIGHWAY	B-07					L-77		M-13, M-14	M-20			N.A.	3.55 ②	N.A.	N.A.	3.55 ②	N.A.	N.A.
	POLICE-HIGHWAY	B-07					L-77				M-21		N.A.	3.90 ②	N.A.	N.A.	3.90 ②	N.A.	N.A.
	POLICE-HIGHWAY	B-07					L-77					M-32	N.A.	3.23 ②	N.A.	N.A.	3.23 ②	N.A.	N.A.
	PERFORMANCE	G-90	S						S		N.A.	M-31	3.08			3.08			
	PERFORMANCE	G-90		S							N.A.	M-33, M-34		3.08	3.08		3.08	3.08	3.08
	PERFORMANCE (LIGHT TRAILER HAULING)	G-91	S L-90	S L-90	L-73 L-90	L-76 L-74 S	L-77 L-78	L-69	S, M-14 ③	M-20	N.A.	M-31 M-33 M-34	3.23	3.23	3.23	3.23	3.23	3.23	3.23
(AK)	PERFORMANCE (HEAVY TRAILER HAULING)	G-93		S L-90	L-73 L-90	S L-74 L-76	L-77 L-78	L-69	S, M-14 M-13	M-20	M-21	M-31, M-32 M-33, M-34		3.55	3.55		3.55	3.55	3.55
(AK)	PERFORMANCE	G-94		S L-90	L-73 L-90	L-76 L-74 S	L-77 L-78	L-69	S, M-14 M-13	N.A.	M-21	M-31, M-32 M-33, M-34		3.90	N.A.		3.90	3.90	N.A.
	PLAINS	G-95	S L-90						S	N.A.	N.A.	M-31	2.78			2.78			
	PLAINS	G-95		S L-90	L-73 L-90	L-76 L-74 S	N.A.	N.A.	N.A.	N.A.	N.A.	M-33 M-34		2.78	N.A.		2.78	2.78	N.A.
	LOCKING	G-80	ALL OF THE ABOVE COMBINATIONS ARE DUPLICATED FOR LOCKING TYPE ANTI-SPIN AXLES - ON BOTH SHEET 1 & 2																
	DEALER INSTALLED PERFORMANCE	90-4		S	L-73	S	L-77 L-78	L-69	S, M-14 M-13	N.A.	M-21	M-32 M-33 M-34	N.R.	4.11 4.33	N.R.	N.R.	(AC) 4.11 4.33	4.11 4.33	N.R.

NOTES: AXLE - TRANSMISSION COMBINATION

FULLY SYNCHRONIZED 3 SPEED (STD., M-13, M-14) 2.78, 3.08, 3.23, 3.55, 3.90, 4.11, 4.33.
FULLY SYNCHRONIZED 4 SPEED WIDE RATIO (M-20) 3.08, 3.23, 3.55
FULLY SYNCHRONIZED 4 SPEED CLOSE RATIO (M-21) 3.55, 3.90, 4.11, 4.33.
(AL) L-6 JETAWAY (M-31) 2.78, 3.08, 3.23.
V-8 JETAWAY (M-32, M-33, M-34) 2.78, 3.08, 3.23, 3.55, 3.90, 4.11, 4.33.

S - STANDARD.
N.A. - NOT AVAILABLE.
N.R. - NOT RECOMMENDED USAGE.

① AVAILABLE ALL EXCEPT CONVERTIBLE (67) MODELS.
② AVAILABLE ALL EXCEPT STATION WAGON (35) MODELS.
③ M-13, M-14 NOT AVAILABLE WITH 33300 OR 33500 SERIES.

SHEET 3

DATE	SYM	REVISION	DR.	CK.	DATE	SYM	REVISION	DR.	CK.	DATE	SYM	REVISION	DR.	CK.
										2-22-66	AK	USAGE REMOVED		
										2-22-66	AJ	LINE REVISED		
										2-22-66	AH	LINE ADDED		
										2-22-66	AG	LINE ADDED		
					2-22-66	AL	3.55 & 3.90 REMOVED			2-22-66	AF	LINE REVISED		

CHART REAR AXLE USAGE

DATE FEB. 17, 1965
DR. BY R. R. STANLAKE
CHECKED H. PAGE
APPR. R. C. STAI. KEL
APPR.

FIRST USED 1966
SERIES A
REV.
ILLUSTRATION
PAGE 4-1.5
PART NO. 392400

OLDSMOBILE DIVISION

GENERAL MOTORS CORPORATION
LANSING — MICHIGAN

	REAR AXLE	ENGINE USAGE (CUBIC INCHES, CYLINDERS, CARBURETOR, COMPRESSION)							TRANSMISSION USAGE				AXLE RATIO USED ON MODEL						
									FULLY SYNCHRONIZED										
		RELEASE GROUP	250 L-6 1 BBL LOW	330 V-8 2 BBL LOW	330 V-8 4 BBL LOW	330 V-8 4 BBL HIGH	400 V-8 4 BBL HIGH	400 V-8 3-2 BBL HIGH	3 SPEED	4 SPEED WIDE RATIO	4 SPEED CLOSE RATIO	JETAWAY	33300 STANDARD 07, 35, 69 (AD)	33400 STANDARD 07, 35, 69	33400 STANDARD 55, 65	33500 DELUXE 17, 35, 39, 69	33600 DELUXE 17, 35, 39, 69	33800 CUTLASS 07, 17, 39, 67, 69	33800 CUSTOM 55, 65
(AF)	POLICE-CITY	B-01	S						S			M-31	3.08			3.08			
(AG)	POLICE-CITY	B-01		S		S			SM-14	M-20		M-34 M33		3.08	3.08		3.08	3.08 ①	3.08
	POLICE-CITY	B-01				L-76			S, M-14				N.A.	3.23	3.23	N.A.	3.23	3.23 ①	3.23
	POLICE-CITY	B-01				L-76						M-34	N.A.	3.23	3.23	N.A.	3.23	3.23 ①	3.23
	POLICE-CITY	B-01					L-77		M-13, M-14	M-20			N.A.	3.55 ②	N.A.	N.A.	3.55 ②	3.55 ①	N.A.
	POLICE-CITY	B-01					L-77				M-21		N.A.	3.90 ②	N.A.	N.A.	3.90 ②	3.90 ①	N.A.
	POLICE-CITY	B-01					L-77					M-32	N.A.	3.23 ②	N.A.	N.A.	3.23 ②	3.23 ①	N.A.
(AH)	POLICE HIGHWAY	B-07	S						S			M-31	3.08 ②			3.08 ②			
(AJ)	POLICE-HIGHWAY	B-07		S					S, M-14	M-20		M-33, M-34		3.08 ②	N.A.		3.08 ②	N.A.	N.A.
	POLICE-HIGHWAY	B-07				L-76			S, M-14	M-20			N.A.	3.23 ②	N.A.	N.A.	3.23 ②	N.A.	N.A.
	POLICE-HIGHWAY	B-07				L-76						M-34	N.A.	3.23 ②	N.A.	N.A.	3.23 ②	N.A.	N.A.
	POLICE-HIGHWAY	B-07					L-77		M-13, M-14	M-20			N.A.	3.55 ②	N.A.	N.A.	3.55 ②	N.A.	N.A.
	POLICE-HIGHWAY	B-07					L-77				M-21		N.A.	3.90 ②	N.A.	N.A.	3.90 ②	N.A.	N.A.
	POLICE-HIGHWAY	B-07					L-77					M-32	N.A.	3.23 ②	N.A.	N.A.	3.23 ②	N.A.	N.A.
	PERFORMANCE	G-90	S						S		N.A.	M-31	3.08			3.08			
	PERFORMANCE	G-90		S							N.A.	M-33, M-34		3.08	3.08		3.08	3.08	3.08
	PERFORMANCE (LIGHT TRAILER HAULING)	G-91	S L-90	S L-90	L-73 L-90	L-76 L-74 S	L-77 L-78	L-69	S, M-14 ③	M-20	N.A.	M-31 M-33 M-34	3.23	3.23	3.23	3.23	3.23	3.23	3.23
(AK)	PERFORMANCE (HEAVY TRAILER HAULING)	G-93		S L-90	L-73 L-90	S L-74 L-76	L-77 L-78	L-69	S, M-14 M-13	M-20	M-21	M-31, M-32 M-33, M-34		3.55	3.55		3.55	3.55	3.55
(AK)	PERFORMANCE	G-94		S L-90	L-73 L-90	L-76 L-74 S	L-77 L-78	L-69	S, M-14 M-13	N.A.	M-21	M-31, M-32 M-33, M-34		3.90	N.A.		3.90	3.90	N.A.
	PLAINS	G-95	S L-90						S	N.A.	N.A.	M-31	2.78			2.78			
	PLAINS	G-95		S L-90	L-73 L-90	L-76 L-74 S	N.A.	N.A.	N.A.	N.A.	N.A.	M-33 M-34		2.78	N.A.		2.78	2.78	N.A.
	LOCKING	G-80	ALL OF THE ABOVE COMBINATIONS ARE DUPLICATED FOR LOCKING TYPE ANTI-SPIN AXLES - ON BOTH SHEET 1 & 2																
(AM)	LOCKING-PERFORMANCE	G-80 & G-89	N.A.	N.A.	N.A.	N.A.	N.A.	L-69	N.A.	N.A.	M-21	N.A.	N.A.	4.11 ④	N.A.	N.A.	4.11 ④	4.11 ④	N.A.
	DEALER INSTALLED PERFORMANCE	90-4		S	L-73	S	L-77 L-78	L-69	S, M-14 M-13	N.A.	M-21	M-32 M-33 M-34	N.R.	4.11 4.33	N.R.	N.R.	(AC) 4.11 4.33	4.11 4.33	N.R.

NOTES: AXLE - TRANSMISSION COMBINATION

FULLY SYNCHRONIZED 3 SPEED (STD., M-13, M-14) 2.78, 3.08, 3.23, 3.55, 3.90, 4.11, 4.33.
FULLY SYNCHRONIZED 4 SPEED WIDE RATIO (M-20) 3.08, 3.23, 3.55
FULLY SYNCHRONIZED 4 SPEED CLOSE RATIO (M-21) 3.55, 3.90, 4.11, 4.33.
(AL) L-6 JETAWAY (M-31) 2.78, 3.08, 3.23.
V-8 JETAWAY (M-32, M-33, M-34) 2.78, 3.08, 3.23, 3.55, 3.90, 4.11, 4.33.

S - STANDARD.
N.A. - NOT AVAILABLE.
N.R. - NOT RECOMMENDED USAGE.

① AVAILABLE ALL EXCEPT CONVERTIBLE (67) MODELS.
② AVAILABLE ALL EXCEPT STATION WAGON (35) MODELS.
③ M-13, M-14 NOT AVAILABLE WITH 33300 OR 33500 SERIES.
④ 4.11 AVAILABLE ONLY ON 07, & 17 MODELS.

SHEET 3

DATE	SYM	REVISION	DR.	CK.	DATE	SYM	REVISION	DR.	CK.	DATE	SYM	REVISION	DR.	CK.
										2-22-66	AK	USAGE REMOVED		
										2-22-66	AJ	LINE REVISED		
										2-22-66	AH	LINE ADDED		
					2-22-66	AM	LINE ADDED			2-22-66	AG	LINE ADDED		
					2-22-66	AL	3.55 & 3.90 REMOVED			2-22-66	AF	LINE REVISED		

CHART REAR AXLE USAGE

DATE FEB. 17, 1965
DR. BY R. R. STANLAKE
CHECKED H. PAGE
APPR. R. C. STEINEL
APPR.

FIRST USED 1966
SERIES A
ILLUSTRATION
REF.
PAGE 4-1.5
PART NO. 392400

OLDSMOBILE DIVISION

GENERAL MOTORS CORPORATION
LANSING — MICHIGAN

EQUIPMENT	L.O. AXLE ASSY 395344	CODE	RATIO	AXLE SUB-ASSY SHOWN ON CHART 395200	CARRIER ASSY OLDS 394629	CARRIER ASSY OLDS GEARS	SHAFT ASSY AXLE	BRAKE ASSY L.H.-R.H.	DRUM ASSY BRAKE
STANDARD TYPE DIFFERENTIAL (EXC. 55, 65 MODELS)									
	395345	SA	2.78	395201	394630	39-14			
EXC.	395346	SC	3.08	395202	394631	40-13	393906	5467122	382306
J56	395347	SE	3.23	395203	394632	42-13			OR
(A) 1								5467123	382307
	395350	SK	2.78	395201	394630	39-14			
WITH	395351	SQ	3.08	395202	394631	40-13	393906	5465492	383829
J56	395352	SV	3.23	395203	394632	42-13			
(A) 2								5465493	
STANDARD TYPE DIFFERENTIAL (55, 65 MODELS)									
	395355	SM	3.08	395206	394631	40-13			
EXC.	395356	SD	3.23	395207	394632	42-13	393908	5467132	1368329
J56 (A) 3								5467133	
	395358	SG	3.08	395206	394631	40-13	393908	5465562	1368329
WITH	395359	TC	3.23	395207	394632	42-13			
J56 (A) 4								5465563	

EQUIPMENT	L.O. AXLE ASSY 395344	CODE	RATIO	AXLE SUB-ASSY SHOWN ON CHART 395200	CARRIER ASSY OLDS 394629	CARRIER ASSY OLDS GEARS	SHAFT ASSY AXLE	BRAKE ASSY L.H.-R.H.	DRUM ASSY BRAKE
LOCKING TYPE DIFFERENTIAL (EXC. 55, 65 MODELS)									
	395361	SB	2.78	395209	394662	39-14			
EXC.	395362	SD	3.08	395210	394663	40-13	393906	5467122	382306
J56	395363	SF	3.23	395211	394664	42-13			OR
(A) 5								5467123	382307
	395366	SL	2.78	395209	394662	39-14			
WITH	395367	SR	3.08	395210	394663	40-13	393906	5465492	383829
J56	395368	SW	3.23	395211	394664	42-13			
(A) 6									
LOCKING TYPE DIFFERENTIAL (55, 65 MODELS)									
	395371	SN	3.08	395214	394663	40-13			
EXC.	395372	SP	3.23	395215	394664	42-13	393908	5467132	1368329
J56 (A) 7								5467133	
	395374	SH	3.08	395214	394663	40-13			
WITH	395375	TD	3.23	395215	394664	42-13	393908	5465562	1368329
J56 (A) 8								5465563	

THE FOLLOWING LIST OF COMPONENT PARTS ARE REQUIRED FOR USE IN CONJUNCTION WITH AXLE SUB-ASSEMBLY OF SELECTED RATIO FROM THE ABOVE CHARTS TO COMPLETE AXLE ASSEMBLY FOR USE ON PRODUCTION LINE OR ASSEMBLY PLANTS.

PART NO.	PART NO. EXCEPT 3455, 65 3855, 65	QUANTITY	DESCRIPTION	
		1	AXLE SUB ASSEMBLY	- REAR (SELECT RATIO FROM CHART)
SEE CHART	SEE CHART	1	BRAKE ASSEMBLY	- REAR - L.
SEE CHART	SEE CHART	1	BRAKE ASSEMBLY	- REAR - R.
1367324		2	GASKET	- BRAKE TO AXLE
9776221		*	GASKET	- BRAKE TO AXLE (OPT)
383944		*	GASKET	- BRAKE TO AXLE (OPT)
	1368330	4	GASKET	- BRAKE & BEARING RETAINER TO AXLE
9776453	414999	8	BOLT	- BRAKE TO AXLE
	1368360	*	BOLT	- BRAKE TO AXLE (OPT)
385186	385186	8	NUT	- BRAKE TO AXLE
SEE CHART	SEE CHART	2	SHAFT ASSEMBLY	- REAR AXLE
SEE CHART	SEE CHART	2	DRUM ASSEMBLY	- REAR BRAKE
358501	358501	4	NUT(ASSEMBLY PLANTS)	- DRUM TO AXLE
1365334		2	GASKET	- OUTER BEARING RETAINER
384939		*	GASKET	- OUTER BEARING RETAINER (OPT)
9774551		*	GASKET	- OUTER BEARING RETAINER (OPT)
387621	387621	2	CABLE ASSEMBLY	- REAR PARKING BRAKE
9416029	9416029	4	NUT (SPRING) (LANSING)	- DRUM TO AXLE
3820840	3820840	1	VENT ASSEMBLY	- REAR AXLE
		1	BRACKET	- BRAKE HOSE (OLDS AXLE)
9782655	9782655	1	BRACKET	- BRAKE HOSE (PONTIAC-BUICK)

THIS REPRESENTS AXLE AS USED AT LANSING PLANT AND AS SHIPPED TO G.M.A.D. ASSEMBLY PLANTS. FOR ASSEMBLY INFORMATION, SEE 394600. MANUFACTURER'S IDENTIFICATION MUST APPEAR ON THIS PART. LOCATION TO BE APPROVED BY ENGINEERING DEPARTMENT. OMISSION REQUIRES APPROVAL OF PURCHASING DIVISION.

PRODUCTION SAMPLE TO BE TESTED AND APPROVED BY PRODUCTION ENGINEERING FOR OLDSMOBILE PARTS.

DATE	SYM	REVISION	DR.	CK.
4-2-66	A0	3.42 & 3.91 DATES REVISED		

SHEET 4

CHART REAR AXLE USAGE

DATE JAN. 5, 1966
DR. BY C. GORDON
CHECKED J. N. JAMES
APPR.
APPR.

FIRST USED 1966

Oldsmobile service ILLUSTRATION

SERIES A

REV.

PAGE 4-1.6

PART NO. 392400

PROPELLER SHAFT USAGE CHART				
PART NO.	COLOR CODE	GROUP	MODELS	
5695098	(1) RED (1) WHITE	4A4	ALL SM MODELS EXC. EXT. WAGONS & G71	
5695094	(1) RED (1) BLACK	4A4	ALL SM EXT. WAGONS	
5697021	(1) BROWN	G71	4S SM (M21) EXC. EXT. WAGONS	Ⓑ
5697022	(2) BROWN	G71	3S SM (M14) (M13)	Ⓒ
5697023	(1) GREEN (1) YELLOW (1) WHITE	G71	AT (M32) EXC. EXT. WAGONS	
5679502	(1) GREEN (1) YELLOW	M33	ALL EXC. EXT. WAGONS	
5693802	(1) GREEN (1) PURPLE	M33	ALL EXT. WAGONS	

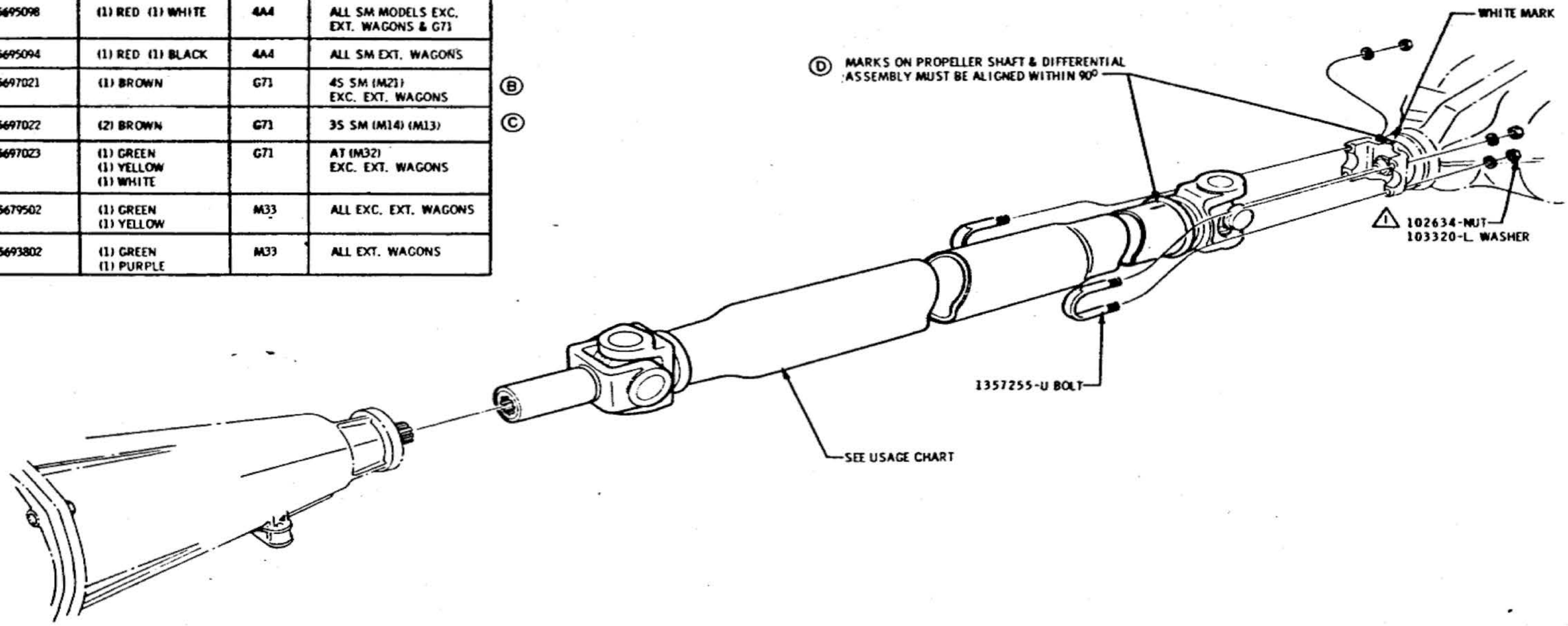

1 12-16 LB. FT.

PROPELLER SHAFT

DATE	SYM	REVISION	DR.	CK.	DATE	SYM	REVISION	DR.	CK.	DATE	SYM	REVISION	DR.	CK.
										4-4-66	D	NOTE REVISED	RS	DMS
										1-20-66	C	WAS (2) GOLD	JJ	MB
										1-20-66	B	WAS (1) GOLD	JJ	MB
										7-28-65	A	REDRAWN	MB	[illegible]

INSTALLATION **REAR SUSPENSION**

DATE FEBRUARY 15, 1965 — FIRST USED 1966 — Oldsmobile Service ILLUSTRATION — PAGE 4-2.1

DR. BY Scott McDonald — CHECKED [illegible] — APPR. [illegible] — APPR. [illegible]

SERIES A — REF. — PART NO. 589998

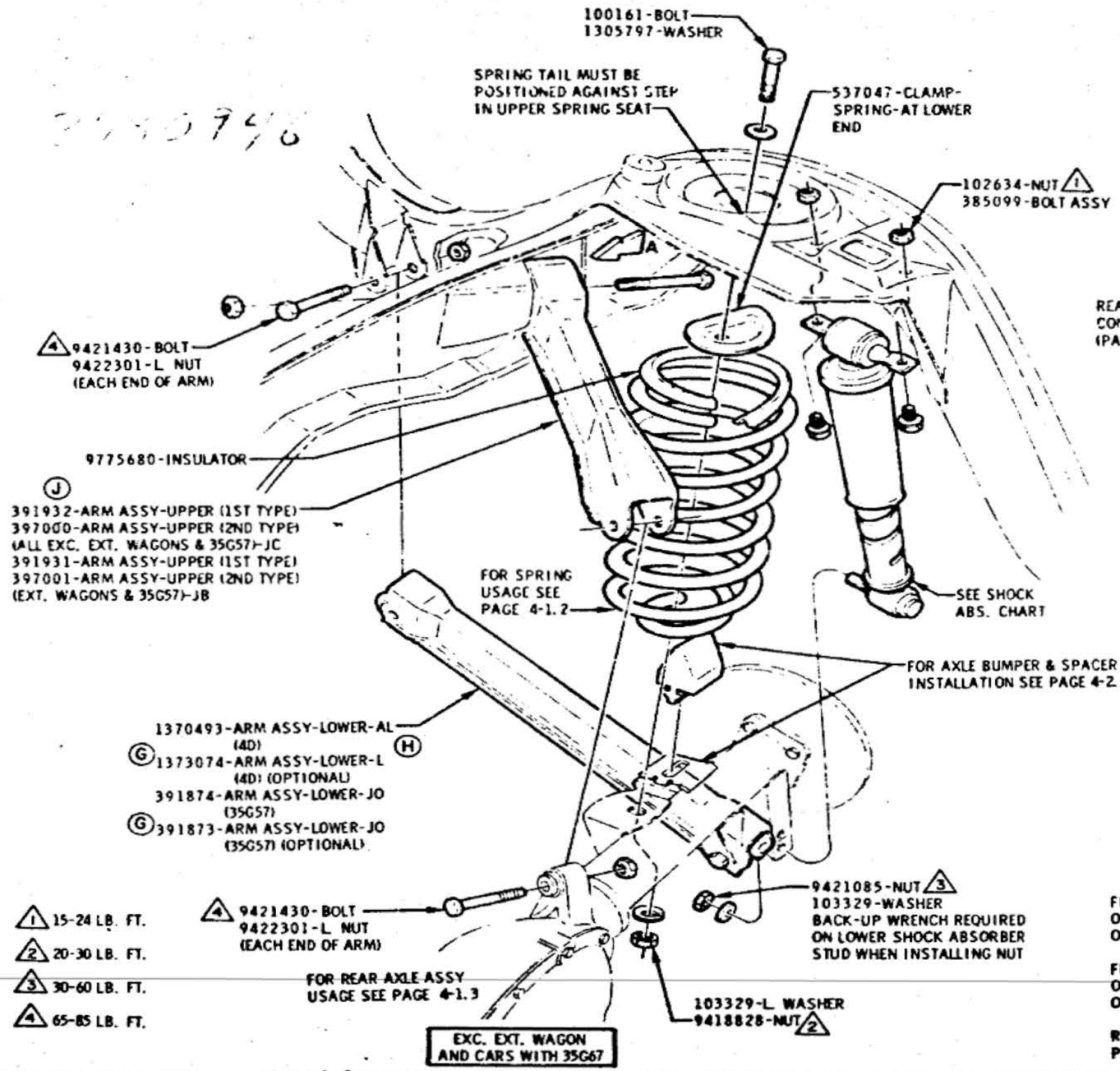

△1 15-24 LB. FT.
△2 20-30 LB. FT.
△3 30-60 LB. FT.
△4 65-85 LB. FT.

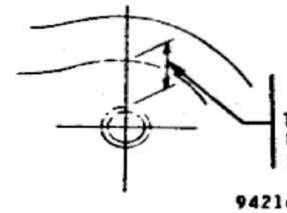

PRODUCTION SETTING

TIGHTEN UPPER & LOWER CONTROL ARM BUSHING BOLTS WITH SPRING COMPRESSED SO TOP OF AXLE TO FRAME IS 5.00 ± .50.

9421430-BOLTS MUST BE INSTALLED IN DIRECTION SHOWN FOR LOWER CONTROL ARM & EXTENDED WAGON UPPER ARM FRONT POSITIONS. UPPER CONTROL ARM POSITIONS EXCEPT FOR EXTENDED WAGON ARE OPTIONAL. TORQUE NUTS OR BOLTS AT ASSEMBLY. SPECIFIED TORQUE APPLIES ONLY WHEN CHECKING ON NUTS.

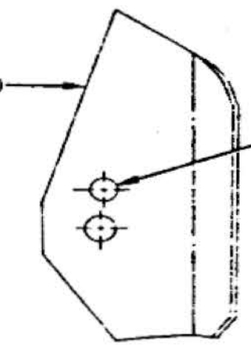

VIEW A

NOTE:
SPRINGS SHOULD BE USED EITHER LOW RANGE ON BOTH SIDES OF CAR OR HIGH RANGE ON BOTH SIDES. LOW RANGE DENOTED BY BLACK CIRCLE AROUND BROADCAST LETTERS.

FILL STANDARD DIFFERENTIALS TO BOTTOM OF FILLER PLUG HOLE WITH 3.00 PINTS OF 9985055 DIFFERENTIAL OIL.

FILL LOCKING TYPE DIFFERENTIALS TO BOTTOM OF FILLER PLUG HOLE WITH 3.00 PINTS OF 9985035 DIFFERENTIAL OIL.

REINSTALL DIFFERENTIAL FILLER PLUG TO 25-35 LB. FT.

CHART-SHOCK ABSORBER ASSY

SHOCK ABS. ASSY	GROUP	MODEL	IDENT.
3186947	4	EXC. S.W.	BB
3192408	F51	EXC. EXT. WAGON	KV
3178142	4	S.W. EXC. EXT. WAGON	EB
3178161	4	EXT. WAGON	EC
3178191	F51	EXT. WAGON	EF
3178194-R.H.	G67	EXC. EXT. WAGON	KJ
3178195-L.H.	G67	EXC. EXT. WAGON	KK
3186851-R.H.	G67	EXT. WAGON	KL
3186852-L.H.	G67	EXT. WAGON	KM

CONTROL ARMS, SHOCKS & SPRINGS

DATE	SYM	REVISION	DR.	CK.	DATE	SYM	REVISION	DR.	CK.	DATE	SYM	REVISION	DR.	CK.
										7-20-65	E2	WAS 9422301-NUT		
					4-27-66	J	2ND TYPE ADDED			6-8-65	D	WAS 3186967		
					3-12-66	H	PART NOS. REVISED			5-25-65	C	PART NO. ADDED		
					10-27-65	G2	OPTION ADDED			5-3-65	B	TITLE REVISED		
					10-18-65	F1	WAS 3113901-L. NUT			5-3-65	A	CHART REVISED		

INSTALLATION **REAR SUSPENSION**

DATE MARCH 15, 1965 — DR. BY MODERN ENGINEERING — CHECKED — APPR. — APPR.

FIRST USED 1966 — Oldsmobile ILLUSTRATION — SERIES A — REF.

PAGE 4-2.2

PART NO. 589998

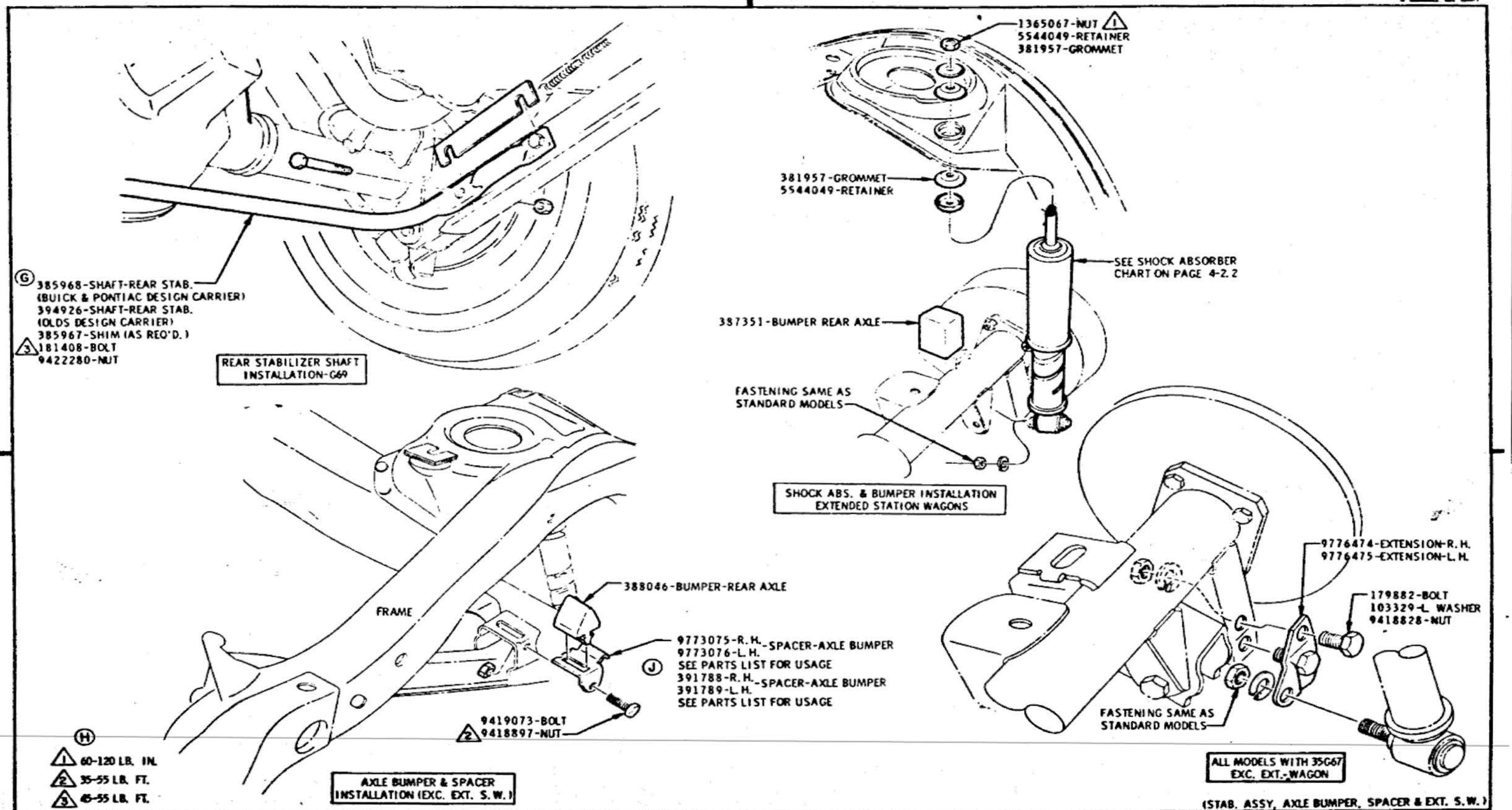

(STAB. ASSY, AXLE BUMPER, SPACER & EXT. S.W.)

DATE	SYM	REVISION	DR.	CK.	DATE	SYM	REVISION	DR.	CK.	DATE	SYM	REVISION	DR.	CK.
										8-30-65	E	REDRAWN		
					2-26-66	J	NOTES REVISED			8-10-65	D	WAS 1026337-NUT		
					1-4-66	H	WAS 10-20 LB. FT.			6-30-65	C	WAS 9418776 NUT		
					12-10-65	G	385968 ADDED			5-25-65	B	WAS TORQUE (3)		
					11-5-65	F	WAS [illegible] SHAFT			5-3-65	A	35G67 INFO. ADDED		

INSTALLATION REAR SUSPENSION

DATE MARCH 15, 1965 — FIRST USED 1966 — Oldsmobile Service ILLUSTRATION — PAGE 4-2.3

DR. BY MODERN ENGINEERING — SERIES A — REF.

CHECKED [illegible] — PART NO. 589998

APPR. [illegible]

APPR. [illegible]

GROUP 5 - BRAKE SYSTEM

PIPE & HOSE ROUTING (EXC. EXT. S.W. & CONV.) ---------- 5-2.1
PIPE ROUTING FOR CONVERTIBLE & (35F35) HEAVY DUTY FRAME ---------- 5-2.1A
PIPE & HOSE ROUTING (EXTENDED STATION WAGON) ---------- 5-2.2
PARKING BRAKE ---------- 5-2.3
BRAKE PEDAL, STOP LIGHT SWITCH & MASTER CYLINDER ---------- 5-2.4
POWER BRAKE, CRUISE CONTROL SWITCH & V8 VACUUM HOSE ROUTING ---------- 5-2.5
PARKING BRAKE ASSY & SWITCH ---------- 5-2.6
L6 POWER BRAKE VACUUM HOSE ROUTING ---------- 5-2.7
35L69 VACUUM HOSE ROUTING ---------- 5-2.8

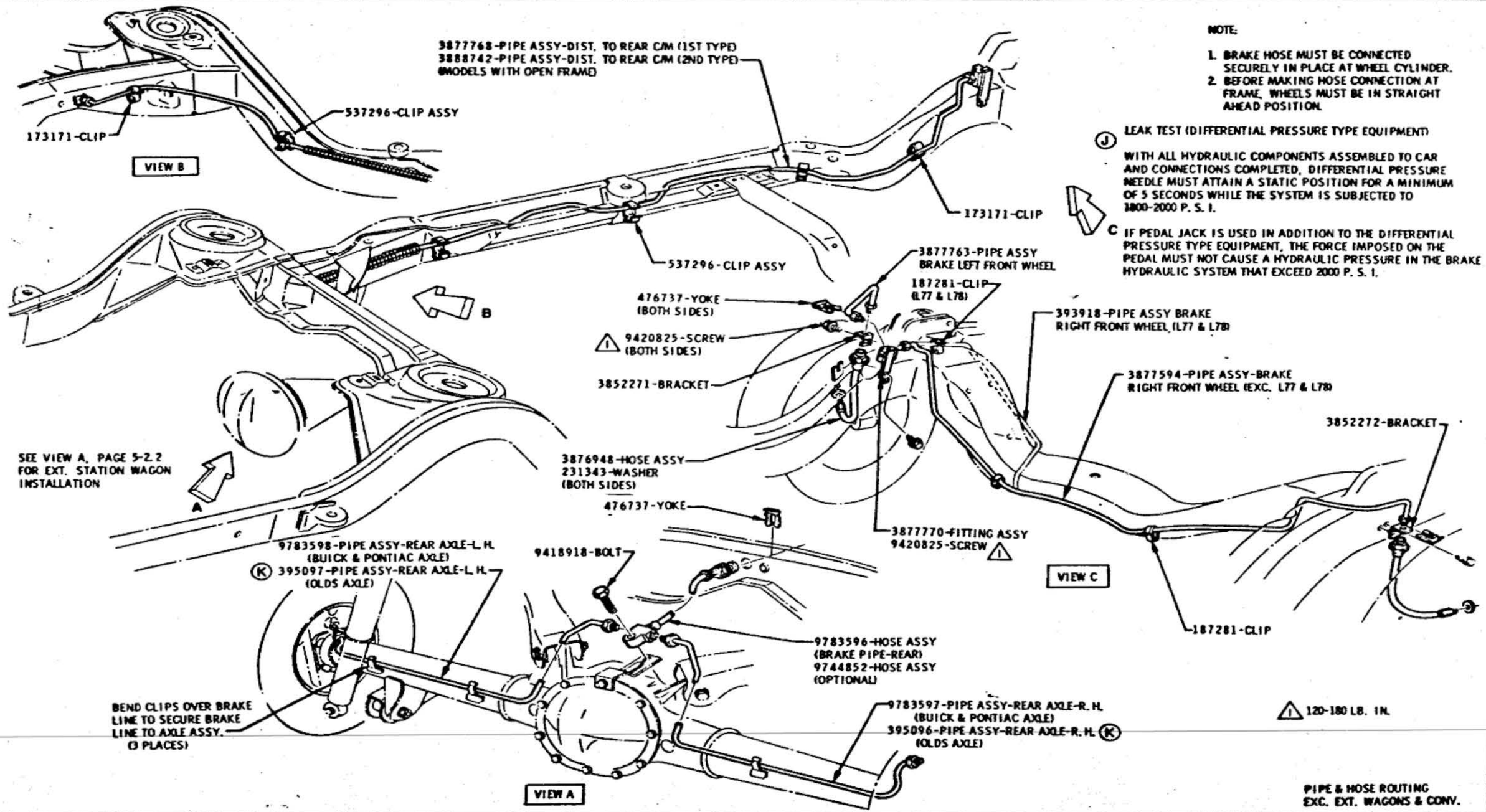

NOTE:

1. BRAKE HOSE MUST BE CONNECTED SECURELY IN PLACE AT WHEEL CYLINDER.
2. BEFORE MAKING HOSE CONNECTION AT FRAME, WHEELS MUST BE IN STRAIGHT AHEAD POSITION.

(J) LEAK TEST (DIFFERENTIAL PRESSURE TYPE EQUIPMENT)

WITH ALL HYDRAULIC COMPONENTS ASSEMBLED TO CAR AND CONNECTIONS COMPLETED, DIFFERENTIAL PRESSURE NEEDLE MUST ATTAIN A STATIC POSITION FOR A MINIMUM OF 5 SECONDS WHILE THE SYSTEM IS SUBJECTED TO 1800-2000 P. S. I.

C IF PEDAL JACK IS USED IN ADDITION TO THE DIFFERENTIAL PRESSURE TYPE EQUIPMENT, THE FORCE IMPOSED ON THE PEDAL MUST NOT CAUSE A HYDRAULIC PRESSURE IN THE BRAKE HYDRAULIC SYSTEM THAT EXCEED 2000 P. S. I.

1 120-180 LB. IN.

PIPE & HOSE ROUTING
EXC. EXT. WAGONS & CONV.

DATE	SYM	REVISION	DR.	CK.	DATE	SYM	REVISION	DR.	CK.	DATE	SYM	REVISION	DR.	CK.
					2-1-66	K	PART NO'S ADDED			8-2-65	C	PART NOS. ADDED		
					11-2-65	J	LEAK TEST NOTE ADDED			8-2-65	D	PART NO'S. REVISED		
					10-1-65	H	S.W. INFO. MOVED TO 5-2.2			6-8-65	G	WAS 187281		
					9-1-65	G	WAS 385160			6-2-65	B	WAS 1366288		
					8-2-65	F	WAS 3753771			6-2-65	A	WAS 1367898		

INSTALLATION **BRAKE CONTROL**

DATE MARCH 3, 1965
DR. BY E. D. ROE
CHECKED
APPR.
APPR.

FIRST USED 1966 — Oldsmobile Service ILLUSTRATION

REVISED A — REV.

PAGE 5-2.1

PART NO. 589998

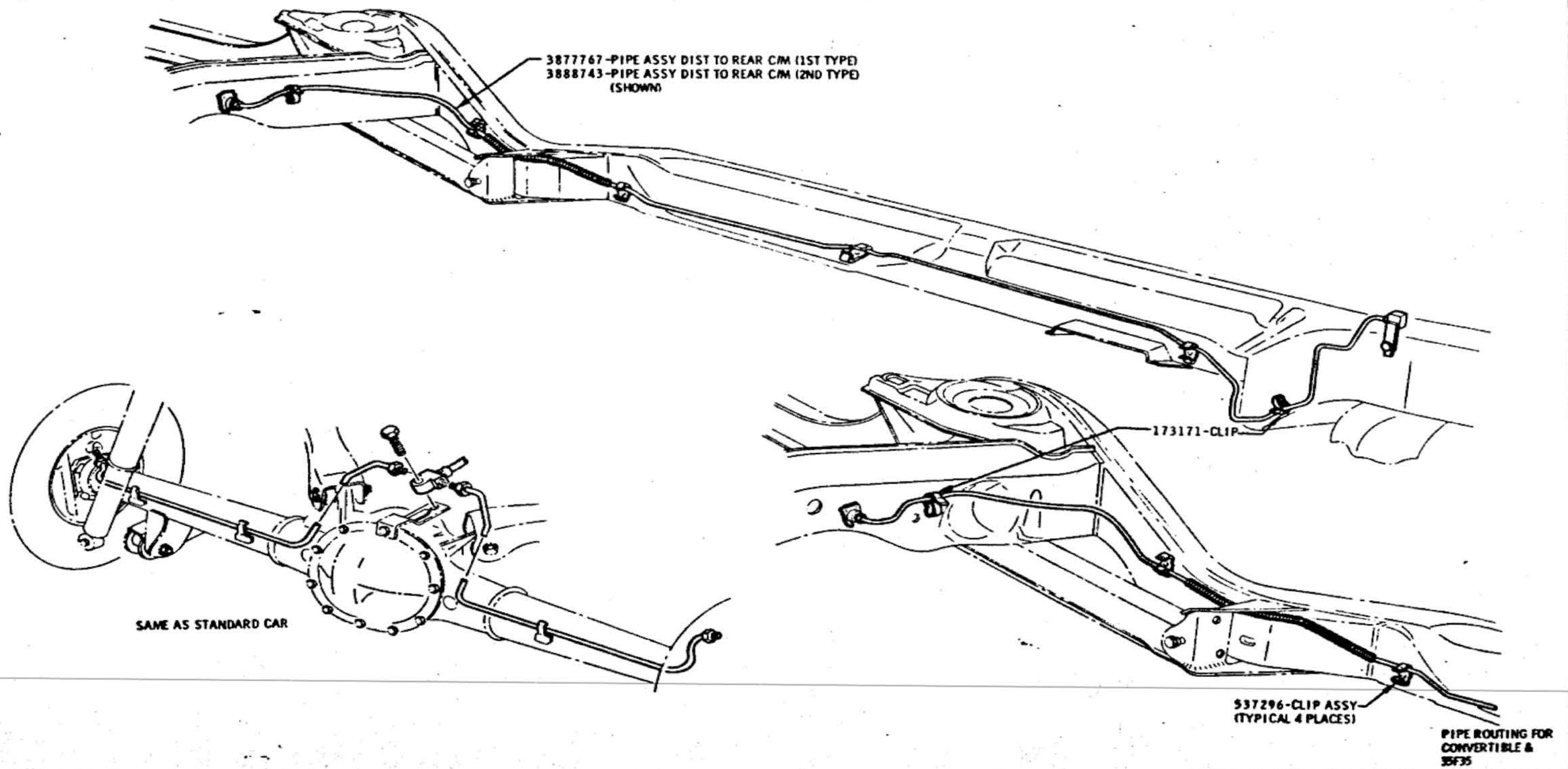

PIPE ROUTING FOR CONVERTIBLE & 35F35

DATE	SYM	REVISION	DR.	CK.	DATE	SYM	REVISION	DR.	CK.	DATE	SYM	REVISION	DR.	CK.

INSTALLATION **BRAKE CONTROL**

DATE OCTOBER 14, 1965
DR. BY P. McKESSY
CHECKED M. Bonhart
APPR. [illegible]
APPR. [illegible]

FIRST USED 1966

Oldsmobile Service ILLUSTRATION

SERIES A

REF.

PAGE 5-2.1A

PART NO. 589998

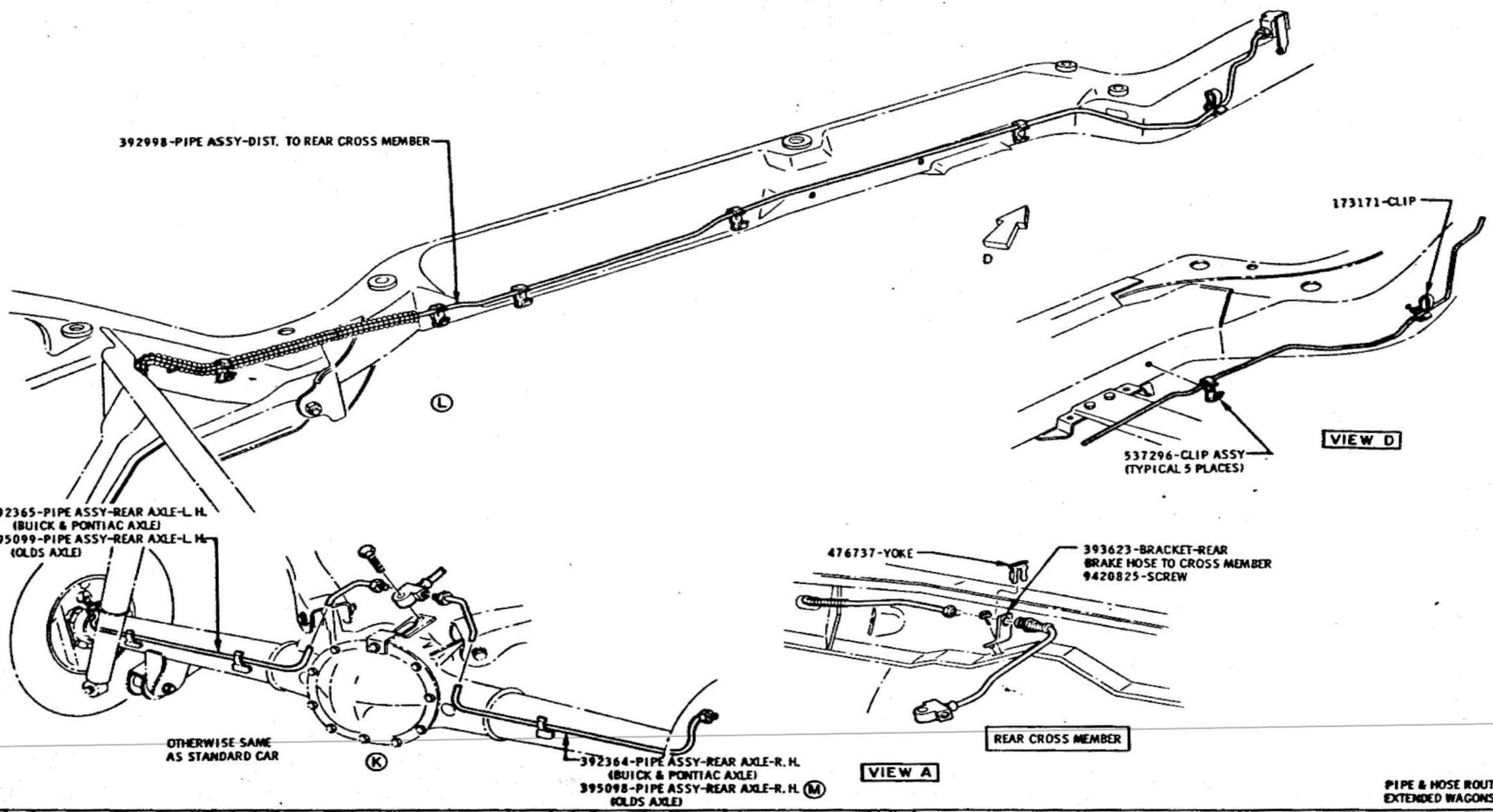

PIPE & HOSE ROUTING
EXTENDED WAGONS

DATE	SYM	REVISION	DR.	CK.	DATE	SYM	REVISION	DR.	CK.	DATE	SYM	REVISION	DR.	CK.
					10-14-65	K	VIEW ADDED			8-12-65	G	WAS 3753771		
					10-14-65	J	CONV. INFO. MOVED TO 5-2.1A			6-18-65	D	WAS 1363761-BRKT.		
					10-14-65	H	CLIP ADDED			6-2-65	C	WAS 1872281		
2-1-66	M	PART NO'S ADDED			10-14-65	G	173171-CLIP REMOVED			6-2-65	B	WAS 1968651		
11-29-65	L	SCE528-CLIP REMOVED			8-12-65	F	PART NUMBER ADDED			6-2-65	A	WAS 1967899		

INSTALLATION **BRAKE CONTROL**

DATE MARCH 31, 1965
DR. BY ED ROE
CHECKED
APPR. J. R. Jones
APPR.

FIRST USED 1966
SERIES A
REF.
ILLUSTRATION
PAGE 5-2.2
PART NO. 589998

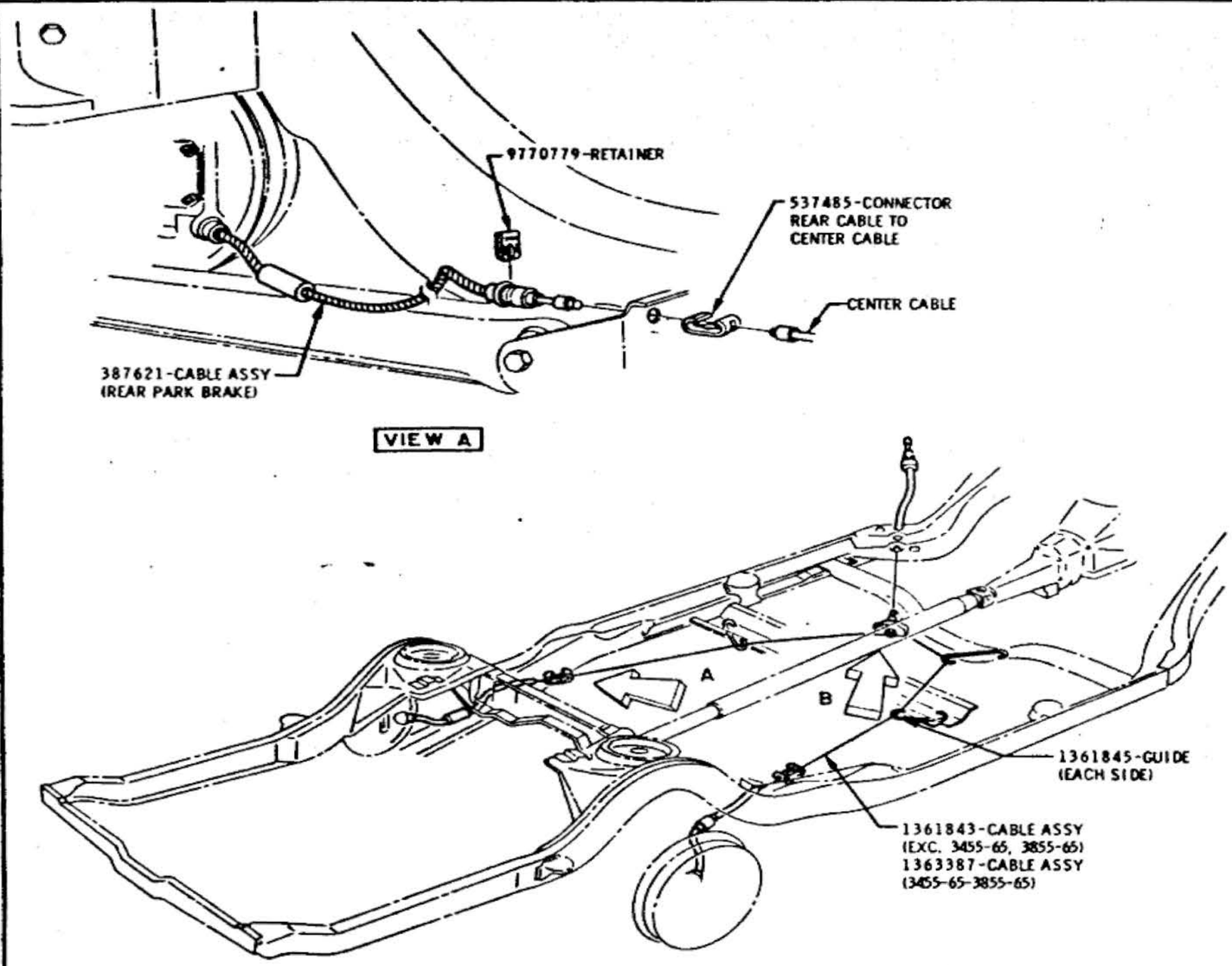

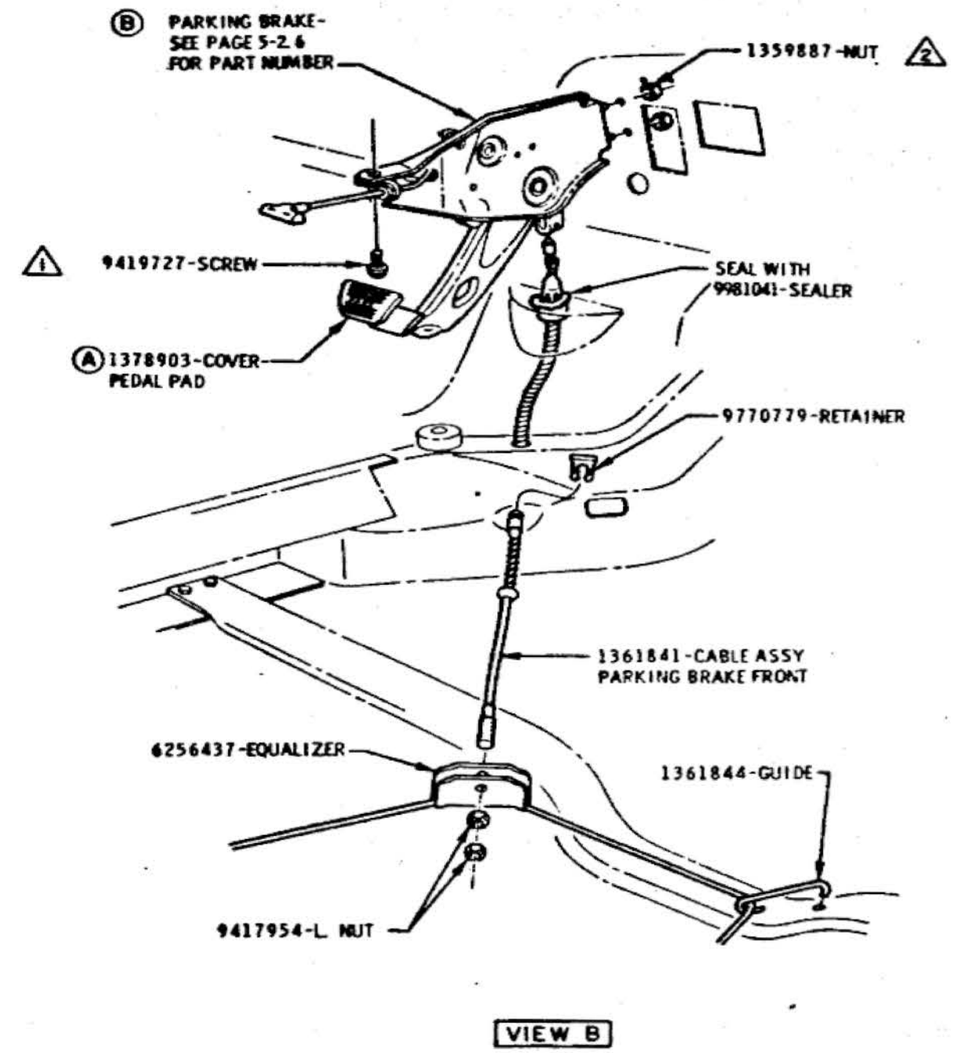

ADJUST REAR CABLE TENSION IN RELEASED POSITION TO PRODUCE A PEDAL LOAD OF 55-65 LBS FOR 5 CLICKS TRAVEL OF PEDAL

1 72-108 LB. IN.

2 84-120 LB. IN.

PARKING BRAKE

DATE	SYM	REVISION	DR.	CK.	DATE	SYM	REVISION	DR.	CK.	DATE	SYM	REVISION	DR.	CK.
										10-14-65	B	PART NOS. MOVED TO 5-2.6		
										10-7-65	A	WAS 1363585		

INSTALLATION BRAKE CONTROL

DATE MARCH 3, 1965

DR. BY

CHECKED

APPR.

APPR.

FIRST USED 1966

Oldsmobile Service ILLUSTRATION

SERIES A

REF.

PAGE 5-2.3

PART NO. 589998

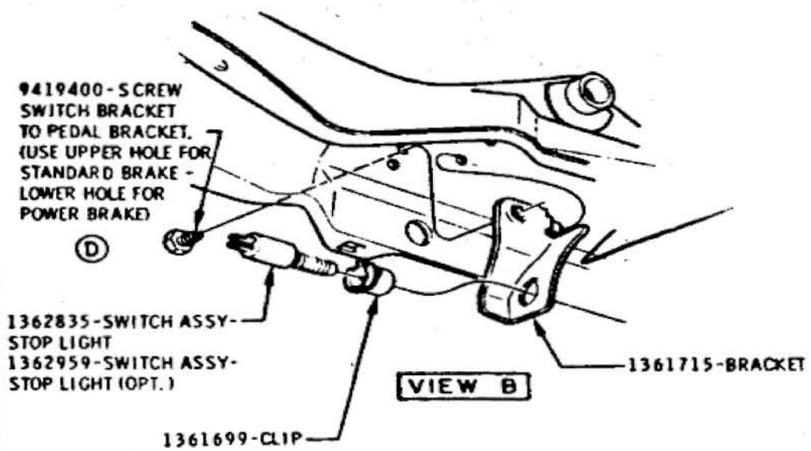

STOP LIGHT SWITCH SETTING
1. ADJUST BRAKE PEDAL HEIGHT BEFORE ADJUSTING SWITCH.
2. INSERT SWITCH INTO TUBULAR CLIP UNTIL SWITCH BODY SEATS ON TUBE CLIP.
3. PULL BRAKE PEDAL REARWARD AGAINST INTERNAL PEDAL STOP. SWITCH WILL BE MOVED IN TUBULAR CLIP PROVIDING PROPER ADJUSTMENT.

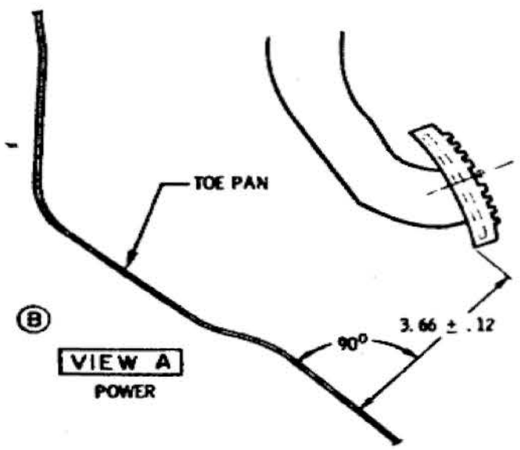

PEDAL HEIGHT MEASURED
15.00" OUTBOARD FROM CENTERLINE
OF CAR FOR SMT & JT

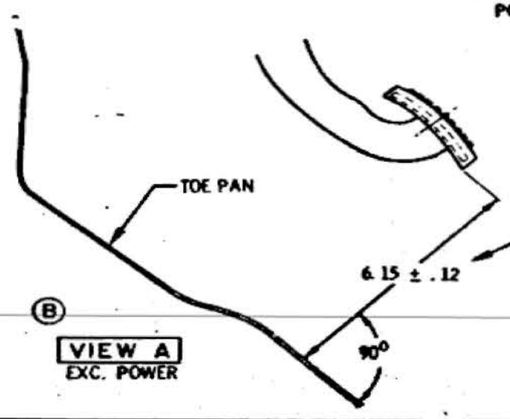

SMT-BRAKE PEDAL HEIGHT TO
MATCH CLUTCH PEDAL WITHIN
.12 INCH AFTER CLUTCH CONTROL
HAS BEEN INSTALLED.

JT-PEDAL HEIGHT MEASURED
15.00" OUTBOARD FROM
CENTERLINE OF CAR.

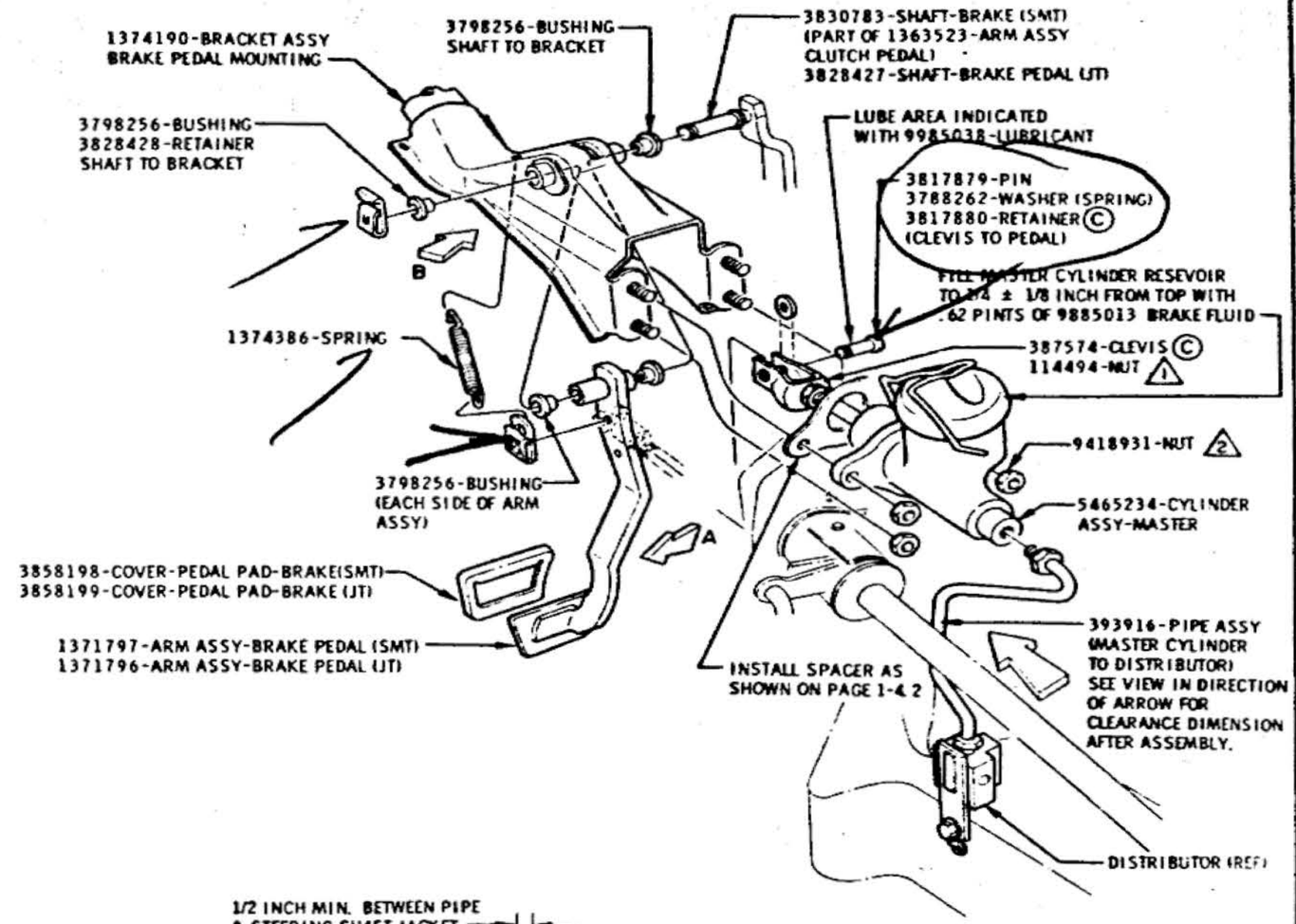

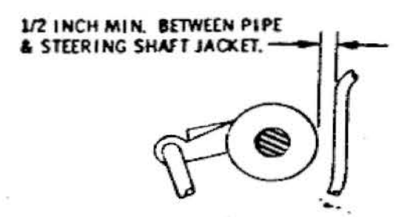

VIEW IN DIRECTION OF
ARROW AFTER ASSEMBLY

1 60-120 LB. IN.
2 20-28 LB. FT.

BRAKE PEDAL, STOP LIGHT SWITCH & MASTER CYLINDER

DATE	SYM	REVISION	DR.	CK.	DATE	SYM	REVISION	DR.	CK.	DATE	SYM	REVISION	DR.	CK.
										2-10-66	D	NOTE REVISED		
										1-20-66	C	REVISED TO DETAIL		
										9-23-65	B	VIEW "A" REVISED		
										8-12-65	A	393916 WAS 367326		

INSTALLATION	BRAKE CONTROL		
DATE MARCH 4, 1965	FIRST USED 1966	Oldsmobile Service ILLUSTRATION	PAGE 5-2.4
DR. BY ED ROE			
CHECKED	SERIES A	REF.	PART NO. 589998
APPR.			
APPR.			

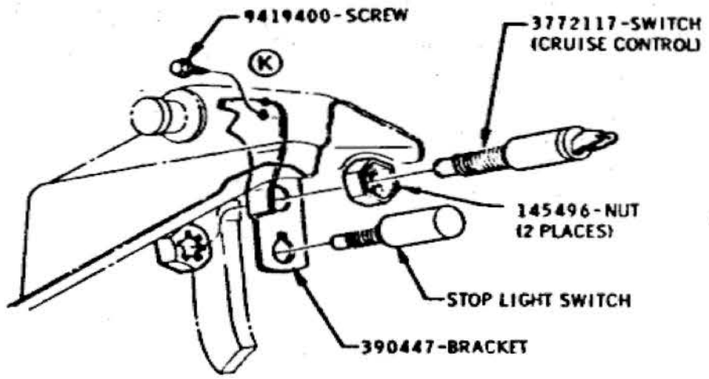

VIEW B
CRUISE CONTROL SWITCH FASTENING

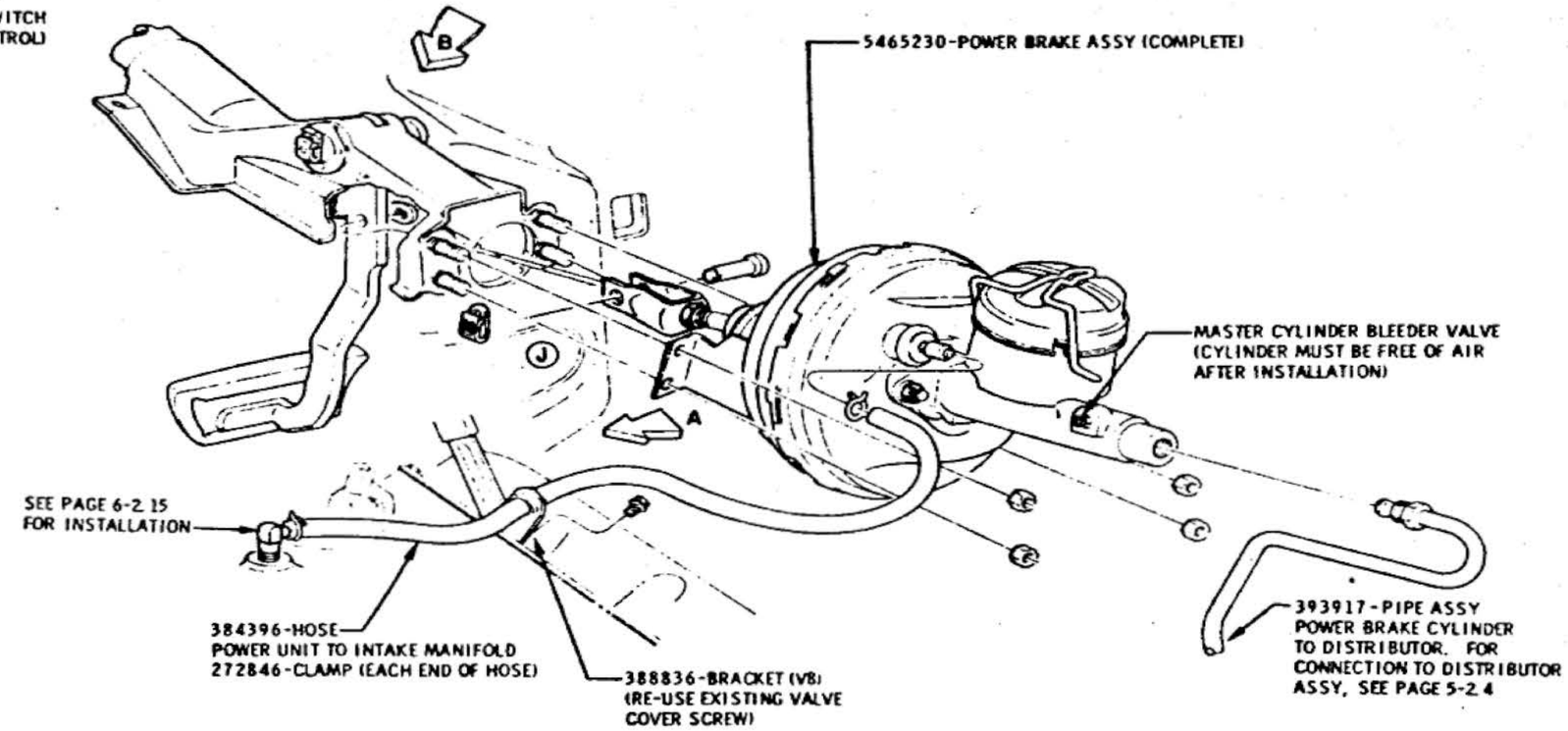

BALANCE OF PARTS ARE SHOWN ON PAGE 5-2.4

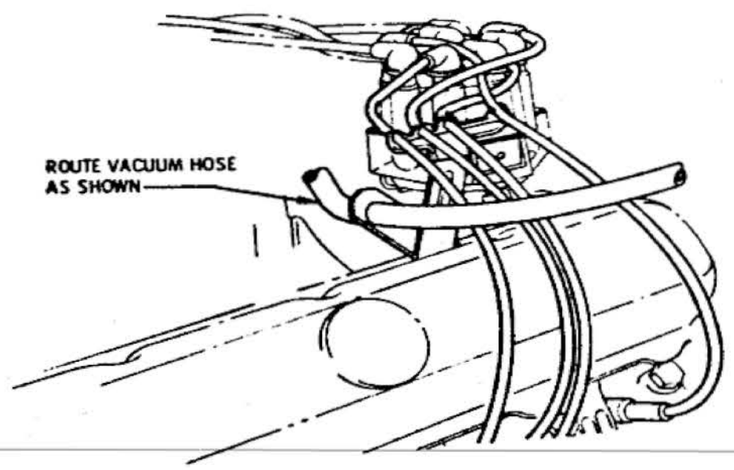

1 20-25 LB. FT.

VIEW A

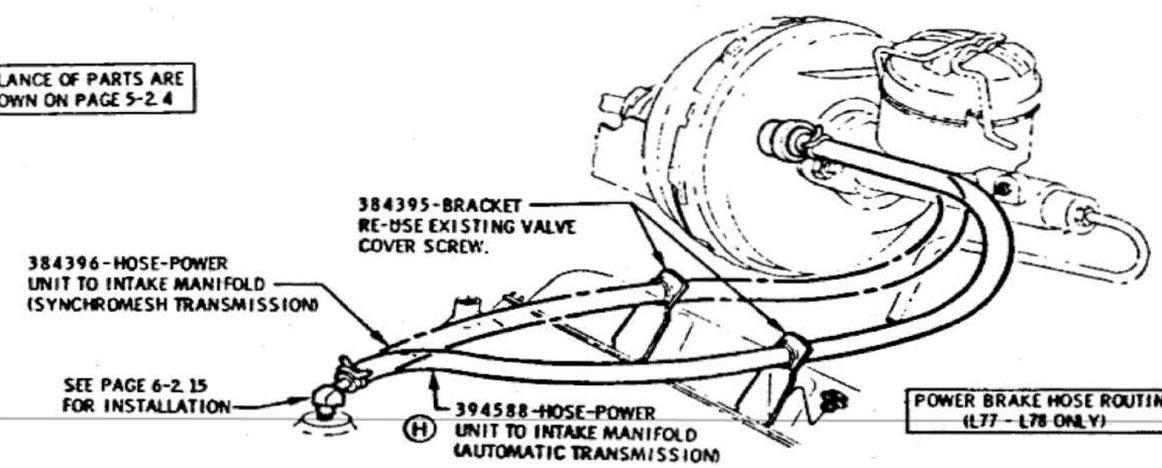

POWER BRAKE HOSE ROUTING (L77 - L78 ONLY)

POWER BRAKE, CRUISE CONTROL SWITCH & V8 VACUUM HOSE ROUTING

DATE	SYM	REVISION	DR.	CK.	DATE	SYM	REVISION	DR.	CK.	DATE	SYM	REVISION	DR.	CK.
					2-8-66	K	SCREW RELOCATED			9-20-65	E	WAS 9419569 SCREW		
					1-21-66	J	REVISED TO DETAIL			8-11-65	D	393917 WAS 351327		
					11-2-65	H	WAS 577883-HOSE			8-11-65	C2	NOTE REVISED		
					9-21-65	G	SUB ASSY REMOVED			7-28-65	B	REDRAWN		
					9-20-65	F	VIEW REVISED & REDRAWN			5-27-65	A	VIEW ADDED		

INSTALLATION **BRAKE CONTROL**

DATE MARCH 8, 1965
DR. BY
CHECKED
APPR.
APPR.

FIRST USED 1966 — Oldsmobile Service ILLUSTRATION

SERIES A — REF.

PAGE 5-2.5

PART NO. 589998

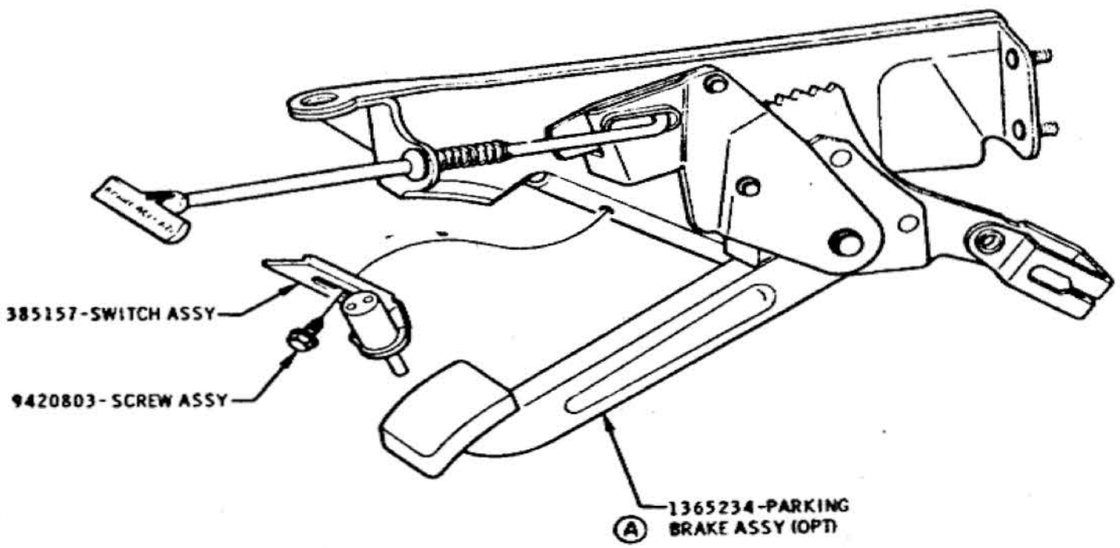

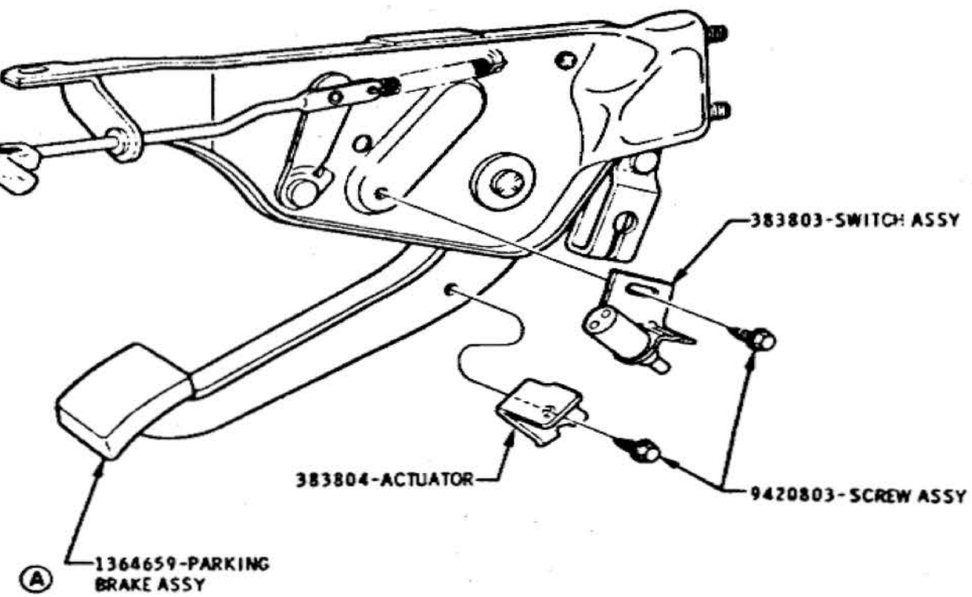

(B) PARKING BRAKE SIGNAL LIGHT MUST COME ON AS LEVER IS DEPRESSED TO THE SECOND CLICK.

PARKING BRAKE ASSY & SWITCH

DATE	SYM	REVISION	DR.	CK.	DATE	SYM	REVISION	DR.	CK.	DATE	SYM	REVISION	DR.	CK.
										10-7-65	B	NOTE REVISED		
										10-14-65	A	PART NOS. ADDED		

INSTALLATION BRAKE CONTROL

DATE MARCH 18, 1965 | FIRST USED 1966 | Oldsmobile Classic ILLUSTRATION | PAGE 5-2.6

DR. BY MODERN ENG. | SERIES A | REF. | PART NO. 589998

CHECKED | APPR. | APPR.

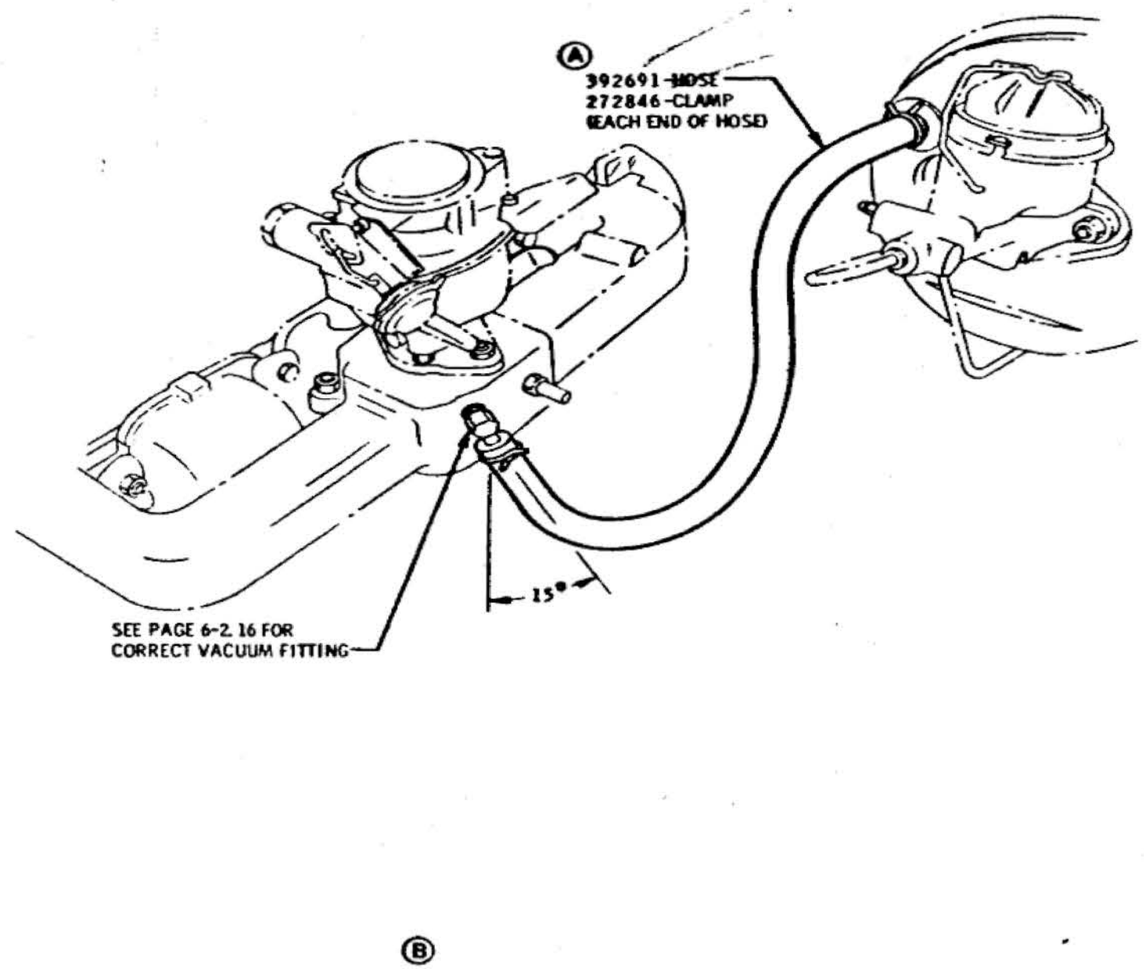

(L6 - VACUUM HOSE ROUTING)

DATE	SYM	REVISION	DR	CK	DATE	SYM	REVISION	DR.	CK.	DATE	SYM	REVISION	DR.	CK.
										6-2-65	B	CONNECTOR INFO REMOVED		
										52465	A	MNS 392691 -HOSE		

INSTALLATION **BRAKE SYSTEM**

DATE MARCH 31, 1965
DR. BY R.E. MASON
CHECKED
APPR.
APPR.

FIRST USED 1966 — Oldsmobile Service ILLUSTRATION

SERIES A — REF.

PAGE 5-2.7

PART NO. 589998

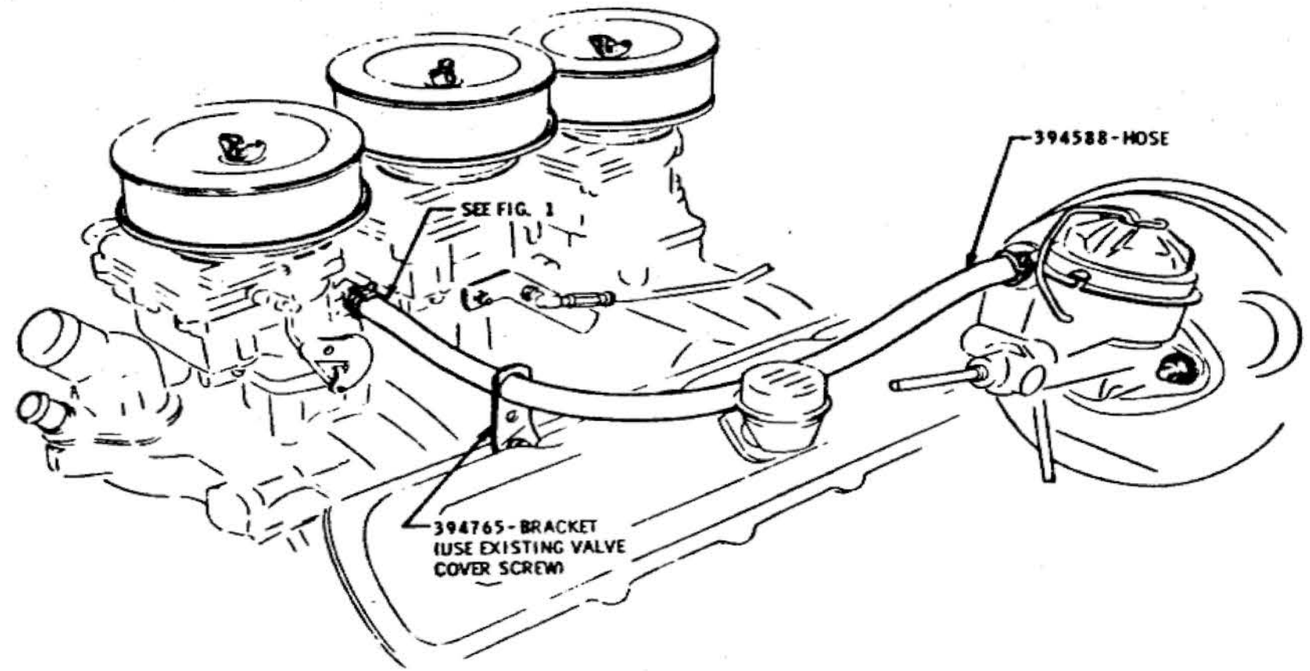

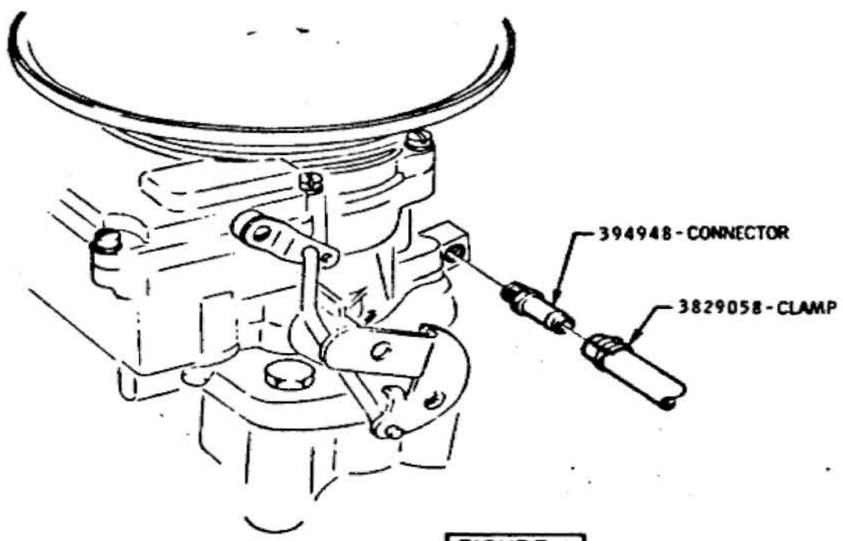

FIGURE 1

(35L69 VACUUM HOSE ROUTING)

DATE	SYM	REVISION	DR.	CK.	DATE	SYM	REVISION	DR.	CK.	DATE	SYM	REVISION	DR.	CK.

INSTALLATION BRAKE CONTROL

DATE NOV. 12, 1965
DR. BY D.C. MIMBERLAUGH
CHECKED
APPR.
APPR.

FIRST USED 1966

Oldsmobile Service ILLUSTRATION

SERIES A

REF. 35L69

PAGE 5-2.8

PART NO. 589998

OLDSMOBILE PRODUCT INFORMATION MANUAL

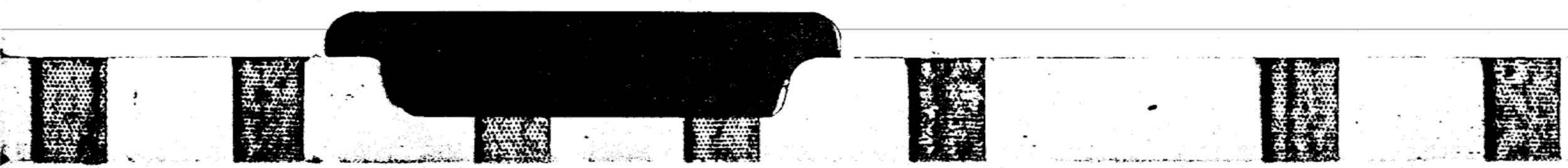

6 - ENGINE

GROUP 6 – ENGINE

391800	CHART-V8 ENGINE IDENTIFICATION (SHEET 1)	6-1.2
391800	CHART-L6 ENGINE IDENTIFICATION (SHEET 2)	6-1.2A
393260	CHART-ENGINE APPEARANCE (SHEET 1)	6-1.3
393260	CHART-ENGINE APPEARANCE (SHEET 2)	6-1.3A
391974	CHART-V8 PULLEY AND BELT DATA (SHEET 1)	6-1.4
391974	CHART-L6 PULLEY AND BELT DATA (SHEET 2)	6-1.4A
391988	CHART-V8 PULLEY AND BELT DIAGRAM (SHEET 1)	6-1.5
391988	CHART-V8 PULLEY AND BELT DIAGRAM (SHEET 2)	6-1.6
391988	CHART-V8 PULLEY AND BELT DIAGRAM (SHEET 3)	6-1.7
391988	CHART-V8 PULLEY AND BELT DIAGRAM (SHEET 4)	6-1.8
391988	CHART-V8 PULLEY AND BELT DIAGRAM (SHEET 5)	6-1.9
391988	CHART-V8 PULLEY AND BELT DIAGRAM (SHEET 6)	6-1.10
391988	CHART-L6 PULLEY AND BELT DIAGRAM (SHEET 7)	6-1.11
391988	CHART-L6 PULLEY AND BELT DIAGRAM (SHEET 8)	6-1.12
391988	CHART-L6 PULLEY AND BELT DIAGRAM (SHEET 9)	6-1.13
393038	CHART-V8 THROTTLE ADJUSTMENT (SHEET 1)	6-1.14
393038	CHART-L6 THROTTLE ADJUSTMENT (SHEET 2)	6-1.14A
393388	CHART-V8 ENGINE CONVERSION (SHEET 1)	6-1.15
393388	CHART-L6 ENGINE CONVERSION (SHEET 2)	6-1.15A
	CHART-ENGINE VACUUM SOURCE (2 BBL. CARB.)	6-1.16
	CHART-ENGINE VACUUM SOURCE (4 BBL. CARB.) (EXC. 35L77-L78)	6-1.16A
	CHART-ENGINE VACUUM SOURCE (4 BBL. CARB.) (35L77-L78)	6-1.16B
	CHART-AIR INJECTION REACTOR SYSTEM DIAGRAM (V8 EXC. 35L77-L78)	6-1.17
	CHART-AIR INJECTION REACTOR SYSTEM DIAGRAM (35L77-L78)	6-1.17A
	CHART-AIR INJECTION REACTOR SYSTEM DIAGRAM (L6)	6-1.17B
395619	CHART-ENGINE UNIT NUMBER	6-1.18

V8 FAN & PULLEY ASSY & H. D. FAN & CLUTCH ---------- 6-2.1
V8 POWER STEERING PUMP, BRACKETS & BATTERY CABLE ---------- 6-2.2
L-6 OIL SENDING UNIT, DIP STICK, TUBE, STARTER AND GENERATOR ---------- 6-2.3
V8 GENERATOR ASSEMBLY ---------- 6-2.4
L-6 CARBURETOR AND AIR CLEANER ---------- 6-2.5
L-6 A/C COMPRESSOR AND BRACKETS ---------- 6-2.6
V8 A/C COMPRESSOR AND BRACKETS (EXC. 35K19) ---------- 6-2.7
L-6 FAN & PULLEY & H. D. FAN & CLUTCH ---------- 6-2.8
L-6 FUEL AND VACUUM LINES, CRANKCASE VENT., FUEL PUMP & OIL FILTER ---------- 6-2.9
L-6 POWER STEERING PUMP AND BRACKET (EXC. 35K19) ---------- 6-2.10
6-2.11
L-6 THROTTLE CONTROL ---------- 6-2.12
L-6 IGNITION COIL & CABLES ---------- 6-2.13
V8 AIR CONDITIONING GENERATOR MOUNTING ---------- 6-2.14
V8 WATER VALVES, OUTLETS, & PLUGS ---------- 6-2.15
L-6 VACUUM FITTINGS ---------- 6-2.16
V8 DASHPOT TO ENGINE (EXC. 35K19) ---------- 6-2.17
35K30 VACUUM SERVO MOUNTING TO L-6 ---------- 6-2.18
V8 OIL INDICATOR ASSY ---------- 6-2.19
35L69 VENTILATION, CARB. LINKAGE AND COIL ASSY ---------- 6-2.20

V8 POWER PLANT TO FRAME----------6-3.1
L-6 POWER PLANT TO FRAME----------6-3.2
V8 CRANKCASE VENTILATION----------6-3.3
L-6 CRANKCASE VENTILATION & 35K19----------6-3.4
V8 35K19 PUMP, BRACKETS, VALVES & MANIFOLD (EXC. 35L77-L78)----------6-3.5
V8 35K19 HOSE ROUTING (EXC. 35L77-L78)----------6-3.6
V8 A/C COMPRESSOR WITH 35K19----------6-3.7
35K19 PUMP, BRACKETS, VALVES & MANIFOLD (35L77-L78)----------6-3.8
35K19 HOSE ROUTING (35L77-L78)----------6-3.9
L-6 35K19 AIR PUMP----------6-3.10
L-6 35K19 AIR PIPE & CHECK VALVE ASSY----------6-3.11
35K19 THERMOSTATIC VACUUM SWITCH & HOSE ROUTING/35L77-L78----------6-3.12

OLDSMOBILE DIVISION GENERAL MOTORS CORPORATION LANSING — MICHIGAN

PART NUMBER	UPC GROUP	PROD. CODE	TRANSMISSION			CARBURETOR			COMPRESSION RATIO					EXHAUST MANIFOLDS			AIR CONDITIONING	SPECIAL ACCESSORIES
									PISTON									
			SYNCHROMESH	AUTOMATIC		2 BARREL	4 BARREL	3-2 BARRELS	EXPORT	REG. FUEL	PREM. FUEL			"A" BODY	"B" BODY			
391813	M33	QA		X		X				X				X				
391810	K19	KQA		X		X				X				X				
391809	C60	QB		X		X				X				X			X	
391811	K19	KQB		X		X				X				X			X	
© 391812	L90	QC		X		X			X					X				
391801	6	QI	X			X				X				X				
391802	6	QJ	X			X				X				X				HEAVY DUTY CLUTCH
391807	L90	QK	X			X			X					X				
391818	M33	QN		X			X				X			X				
391815	K19	KQN		X			X				X			X				
391817	L90	QO		X			X		X					X				
391814	C60	QP		X			X				X			X			X	
391816	K19	KQP		X			X				X			X			X	
391822	M32	QR		X			X				X			X				399.5 CU. INCH
391819	K19	KQR		X			X				X			X				399.5 CU. INCH
© 391821	L73	QS		X			X			X				X				LOW COMP.
391820	K19	KQS		X			X			X				X				LOW COMP.
© 391805	L73	QU	X				X			X				X				LOW COMP.
391803	6	QV	X				X				X			X				
391806	L78	QW	X				X				X			X				399.5 CU. INCH
391804	6	QX	X				X				X			X				HEAVY DUTY CLUTCH
391808	L90	QY	X				X		X					X				
Ⓑ Ⓔ 394946 Ⓕ	L69	QZ Ⓓ	X					X			X			X				399.5 CU. INCH

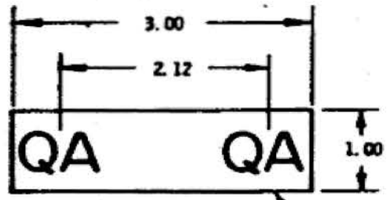

TAPE TO HAVE RED LETTERS ON WHITE BACKGROUND

TYPE OF TAPE TO BE DETERMINED BY MANUFACTURING

INSTALL TAPE ON OIL FILLER TUBE AS SHOWN

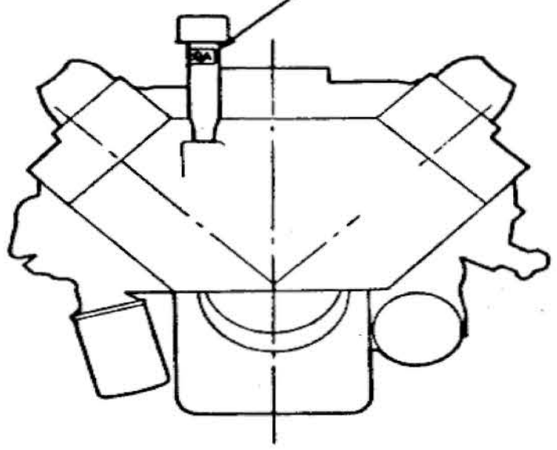

Ⓐ CALIFORNIA ENGINES WITH K20 ONLY WILL HAVE A "K20" TAPE ADDED

330 & 399.5 CUBIC INCH ENGINE ASSEMBLIES

SHEET 1 of 2

DATE	SYM	REVISION	DR.	CK.	DATE	SYM	REVISION	DR.	CK.	DATE	SYM	REVISION	DR.	CK.
										2-27-65	E	393479 REMOVED	JJ	JA
										6-4-65	D	CODE QZ WAS Q	JJ	JA
										5-17-65	C	GROUP REVISED	DS	JA
										5-17-65	B	393979 ADDED	DS	JA
					11-19-65	F	394946 ADDED	JE	JA	5-17-65	A	NOTE REVISED	DS	JA

CHART – ENGINE IDENTIFICATION

DATE JAN. 19, 1965
DR. BY J. D. SMITH
CHECKED O.B. WIGHTMAN
APPR.
APPR.

FIRST USED 1966

Oldsmobile ILLUSTRATION

SERIES A

REV.

PAGE 6-1.2

PART NO. 391800

PART NUMBER	UPC GROUP	PRODUCTION CODE	TRANSMISSION		SPECIAL ACCESSORIES			
			SYNCHROMESH	AUTOMATIC	(A) C60 OR Y76	K19	K20	
391498	6	VA	X					
391680	C60	VB	X		X			
391682	K20	VC	X				X	
391686	K20	VD	X		X		X	
391499	M33	VE		X				
391681	C60	VF		X	X			
391683	K19	VG		X		X	X	
391687	K19	VH		X	X	X	X	
393341	L90	VJ	X					EXPORT
393342	L90	VK		X				EXPORT

PRODUCTION CODE LETTER TAG WILL BE APPLIED BY VENDOR

250 CUBIC IN (L-6) ENGINE ASSEMBLIES

SHEET 2 of 2

DATE	SYM	REVISION	DR.	CK.	DATE	SYM	REVISION	DR.	CK.	DATE	SYM	REVISION	DR.	CK.
										REPRINT	A	Y76 ADDED	JJ	JA

CHART ENGINE IDENTIFICATION

DATE APRIL 5, 1965
DR. BY J.E. CASLER
CHECKED
APPR. J. Lorgwork
APPR.

FIRST USED 1966

Oldsmobile GRAPHIC ILLUSTRATION

SERIES A

REF.

PAGE 6-L.2A

PART NO. 391800

OLDSMOBILE DIVISION GENERAL MOTORS CORPORATION LANSING — MICHIGAN

ENGINE AND COLOR	COMPRESSION RATIO	ENGINE CODE	AIR CLEANER PART NO.	AIR CLEANER COLOR	LABEL CLAMP AND COLOR
L6 (250 CU. IN.) ACTIONLINE 6 1 BBL. GOLD	REGULAR FUEL LOW	VA VB VE VF	6418735 EXC. K19 OR K20	BLACK	NONE
		VC VD	6420500 WITH K20		
		VG VH	6422100 WITH K19		
	EXPORT LOW	VJ VK	6418735		
V8 (330 CU. IN.) JETFIRE 2 BBL. GOLD	REGULAR FUEL LOW	QA QB QI QJ	6422602 EXC. K20	BLACK	391392 BLACK
		QI QJ QOA KQB	6421925 WITH K20		
	EXPORT LOW	QC QK	6422602		
V8 (330 CU. IN.) CUTLASS 4 BBL. GOLD	STD. HIGH	QN QP QX QV	6422604 EXC. K20	RED	391394 RED
		QX QV KQN KQP	6421929 WITH K20		
V8 (330 CU. IN.) CUTLASS 4 BBL. GOLD	REGULAR FUEL LOW	QS QU	6422605 EXC. K20	BLACK	391395 BLACK
		QU KQS	6421931 WITH K20		
	EXPORT LOW	QQ QY	6422605		

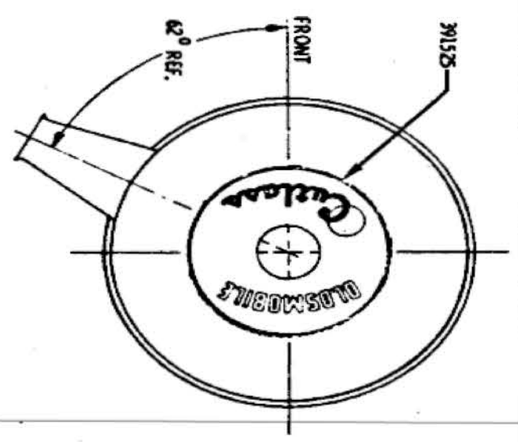

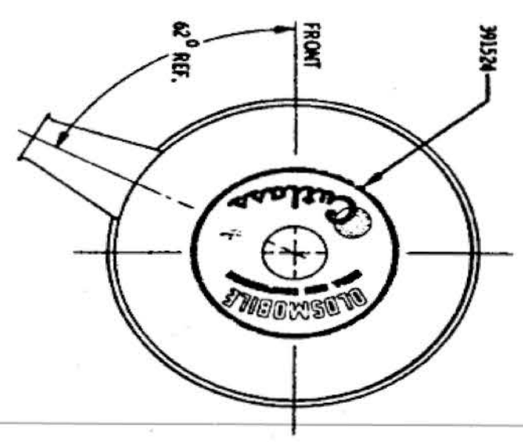

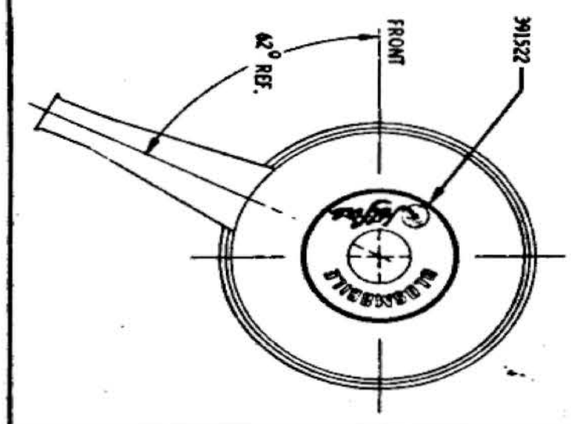

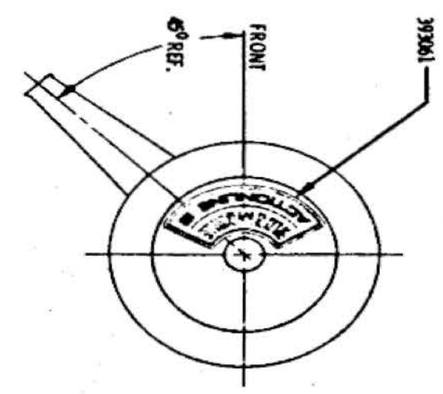

AIR CLEANER LABEL
← FRONT

SHEET 1 OF 2

DATE	SYM	REVISION	DR.	CK.	DATE	SYM	REVISION	DR.	CK.	DATE	SYM	REVISION	DR.	CK.
										7-17-65	A	ENG. CODE & A/C PART NO. COLUMN REVISED		

CHART	ENGINE APPEARANCE		
DATE APRIL 29, 1965	FIRST USED 1966	Oldsmobile ILLUSTRATION	PAGE 6-1.3
DR. BY R.R. STANLAKE			
CHECKED	SERIES A	REF.	PART NO. 393260
APPR.			
APPR.			

OLDSMOBILE DIVISION GENERAL MOTORS CORPORATION LANSING — MICHIGAN

ENGINE AND COLOR	COMPRESSION RATIO	ENGINE CODE	AIR CLEANER PART NO.	AIR CLEANER COLOR	LABEL CLAMP AND COLOR
V8 (400 CU. IN.) 442 4 BBL. BRONZE	STD. HIGH	QR	392692 A.T. EXC. K20	CHROME	391394 RED
		QW	393580 S.M. NO SNORKEL EXC. K20		
		KQR	391887 A.T. WITH K20		
		QW	393581 S.M. NO SNORKEL WITH K20		
V8 (330 CU. IN.) CUTLASS HIGHWAY PATROL 4 BBL. GOLD	STD. HIGH	QN QP QX QV	642260M EXC. K20	RED	NO CLAMP SELF ADHERING LABEL
		QX QV KQN KQP	642192G WITH K20		
V8 (400 CU. IN.) 442 HIGHWAY PATROL 4 BBL. BRONZE	STD. HIGH	QR	392692 A.T. EXC. K20	CHROME	
		QW	393580 S.M. NO SNORKEL EXC. K20		
		KQR	391887 A.T. WITH K20		
		QW	393581 S.M. NO SNORKEL WITH K20		

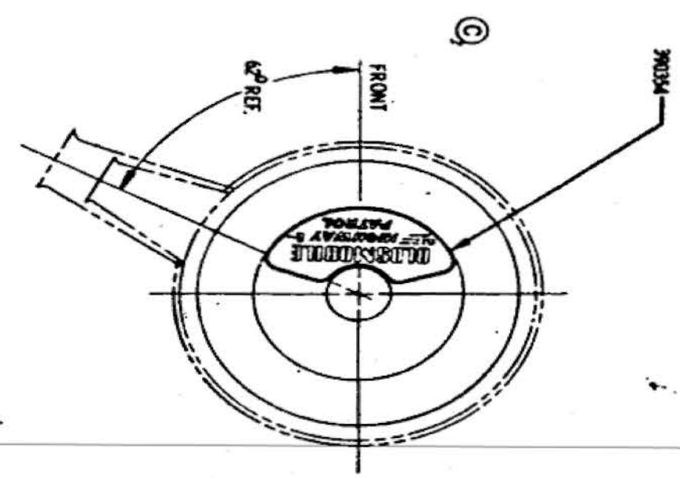

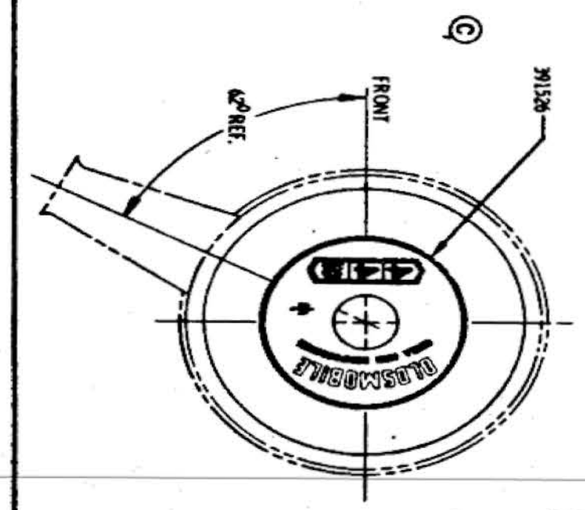

AIR CLEANER LABEL
FRONT

SHEET 2 OF 2

DATE	SYM	REVISION	DR.	CK.	DATE	SYM	REVISION	DR.	CK.	DATE	SYM	REVISION	DR.	CK.
										7-19-65	C	PICTURE REVISED		DL
										7-19-65	B	ENG. CODE & A/C PART NO.		
												COLUMN REVISED		DL
										7-7-65	A	COLUMN REVISED	JJ	JEG

CHART **ENGINE APPEARANCE**

DATE APRIL 29, 1965
DR. BY R.R. STANLAKE
CHECKED
APPR.
APPR.

FIRST USED 1966 — Oldsmobile Graphic Illustration

SERIES A — REF.

PAGE 6-L.3A

PART NO. 393260

OLDSMOBILE DIVISION GENERAL MOTORS CORPORATION LANSING — MICHIGAN

1966 PRODUCTION DRIVE RATIOS

PULLEY	RATIOS	USAGE
CRANK / FAN	6.110 / 7.200 = .8486 TO 1	NON AIR CONDITIONING
CRANK / FAN	7.080 / 6.250 = 1.1328 TO 1	AIR CONDITIONING
CRANK / GENERATOR	6.110 / 2.50 = 2.444 TO 1	NON AIR CONDITIONING
CRANK / GENERATOR	7.080 / 2.50 = 2.832	AIR CONDITIONING
CRANK / POWER STEERING	6.110 / 5.450 = 1.1211 TO 1	NON AIR CONDITIONING
CRANK / POWER STEERING	6.110 / 5.134 = 1.190 TO 1	NON AIR CONDITIONING
CRANK / POWER STEERING	7.080 / 6.270 = 1.1292 TO 1	AIR CONDITIONING
CRANK / POWER STEERING	7.080 / 5.950 = 1.190 TO 1	AIR CONDITIONING
CRANK / COMPRESSOR	7.080 / 5.00 = 1.416 TO 1	AIR CONDITIONING
CRANK / AIR PUMP	6.110 / 4.888 = 1.250 TO 1	NON AIR CONDITIONING
CRANK / AIR PUMP	7.080 / 5.664 = 1.250 TO 1	AIR CONDITIONING

1966 PRODUCTION PULLEYS

CODE	PART NO.	DESCRIPTION	P. D.	O. D.	NO. OF GROOVES
JA	390206	FAN DRIVE	6.110	6.205	2
JB	389645	FAN DRIVE	7.080	7.175	3
JC	391432	FAN DRIVE	6.110	6.205	3
JD	391434	FAN DRIVE	7.080	7.175	4
JE	390207	FAN & WATER PUMP	7.200	7.295	2
JF	389644	FAN & WATER PUMP	6.250	6.345	2
JG	391113	FAN & WATER PUMP	7.200	7.295	1
JH	391114	FAN & WATER PUMP	6.250	6.345	3
JI	391433	FAN & WATER PUMP	7.200	7.295	3
JK	391435	FAN & WATER PUMP	6.250	6.345	4
JL	390144	POWER STEERING	5.134	5.284	1
JM	384678	POWER STEERING	6.270	6.365	1
JN	391140	POWER STEERING	5.950	6.080	1
JO	382418	POWER STEERING	5.450	5.580	1
JP	391061	POWER STEERING	5.450	5.580	1
JR	390120	AIR PUMP	4.888	4.983	1
JS	390272	AIR PUMP	5.664	5.759	1

1966 PRODUCTION DRIVE BELTS

CODE	PART NO.	BELT LENGTH
LB	382616	49.62
LO	391445	46.97
LR	391210	46.03
LU	390525	51.86
LS	391209	48.75 (R)
LC	382644	59.50
LD	382645	61.00
LM	587257	61.70
LL	386066	63.47
LF	384423	58.50
LJ	390423	62.75
LK	386064	64.05
LV	390540	53.30
LW	391213	54.59
LT	391201	50.00
LY	391117	58.89
LZ	391118	60.32
* LE	384424 (SET)	49.62
** LP	391444 (SET)	46.97
LH	393183	53.85

* 384424 BELT SET CONTAINS (2) 382616 MATCHED BELTS.

** 381444 BELT SET CONTAINS (2) 391445 MATCHED BELTS.

1966 PRODUCTION GENERATORS

CODE	PART NO.	AMPS	PULLEY NO. OF GROOVES	PULLEY P. D.	PULLEY O. D.
AC	1100734	42	1	2.50	2.62
(P) AF	1100765	42	1	2.50	2.62
AB	1100733	55	1	2.50	2.62
XD	1100705	37	1	2.50	2.62
(N) AG (S)	1100767	37	1	2.50	2.62
AA	1100730	55	2	2.50	2.62

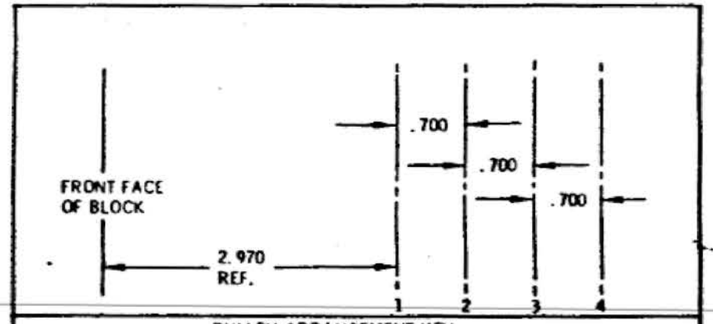

PULLEY ARRANGEMENT KEY

BELT TENSION

BELTS ARE TO BE CHECKED FOR CORRECT TENSION WITH A BURROUGHS GAGE #33-70 AFTER ROLL TEST.

FOR PULLEY & BELT DIAGRAM INFORMATION, REFER TO CHARTS
391988 (A CAR)
391989 (B & C CAR)
391990 (E CAR)

V-8 ENGINE | SHEET 1 OF 2

DATE	SYM	REVISION	DR	CK	DATE	SYM	REVISION	DR	CK	DATE	SYM	REVISION	DR	CK
										12-5-65	S	WAS CODE AB	JJ	AF

CHART — PULLEY & BELT DATA

DATE JAN 14, 1965
DR BY GALE GRAY
CHECKED D. LAFOND
APPR.
APPR.

FIRST USED 1966 — Oldsmobile Service ILLUSTRATION

SERIES A-B-C-E — REF.

PAGE 6-1.4

PART NO. 391974

OLDSMOBILE DIVISION GENERAL MOTORS CORPORATION LANSING — MICHIGAN

1966 PRODUCTION DRIVE RATIOS

PULLEY	RATIO	USAGE
CRANK / FAN	6.64 / 7.00 = .948 TO 1	NON AIR CONDITIONING
CRANK / FAN	7.18 / 6.19 = 1.160 TO 1	AIR CONDITIONING
CRANK / GENERATOR	6.64 / 2.50 = 2.656 TO 1	NON AIR CONDITIONING
CRANK / GENERATOR	7.18 / 2.50 = 2.872 TO 1	AIR CONDITIONING
CRANK / POWER STEERING	6.64 / 5.60 = 1.186 TO 1	NON AIR CONDITIONING
CRANK / POWER STEERING	7.18 / 5.60 = 1.282 TO 1	AIR CONDITIONING
CRANK / AIR PUMP	6.64 / 5.31 X 5.60 / 5.31 = 1.319 TO 1	NON AIR CONDITIONING
CRANK / AIR PUMP	7.18 / 5.31 X 5.60 / 5.31 = 1.426 TO 1	AIR CONDITIONING
CRANK / A/C COMPRESSOR	7.18 / 5.00 = 1.436 TO 1	AIR CONDITIONING

1966 PRODUCTION PULLEYS

CODE	PART NO.	DESCRIPTION	P.D.	O.D.	NO. OF GROOVES
*	3876726	FAN DRIVE	7.18	7.28	2
*	3876722	FAN DRIVE	6.64	6.72	2
BV	3876872	FAN DRIVE	7.18	7.30	1
(A) CT	3890419	FAN & WATER PUMP	6.19	6.31	2
(B) CG	3788472	FAN & WATER PUMP	7.00	7.12	1
CH	3790356	FAN & WATER PUMP	7.00	7.12	2
CI	3791943	POWER STEERING	5.60	5.71	1
DO	3880866	POWER STEERING	5.60	5.71	2
	3880800	AIR PUMP	5.31	5.43	1

* PART OF ENGINE ASSEMBLY

1966 PRODUCTION DRIVE BELTS

CODE	PART NO.	BELT LENGTH
MA	392326	38.86
MB	392590	54.20
MC	392327	38.64
(C) LS	391209	48.75
WB	3845648	49.50
XO	3880802	30.00
MD	392333	31.14
LB	382616	49.62

1966 PRODUCTION GENERATORS

CODE	PART NO.	AMPS	PULLEY NO. OF GROOVES	PULLEY P.D.	PULLEY O.D.
XD	1100705	37	1	2.50	2.62
TN	1100744	37	2	2.50	2.62
AB	1100733	55	1	2.50	2.62
AD	1100752	55	2 (1.24 SPAC)	2.50	2.62
AA	1100730	55	2 (.70 SPAC)	2.50	2.62

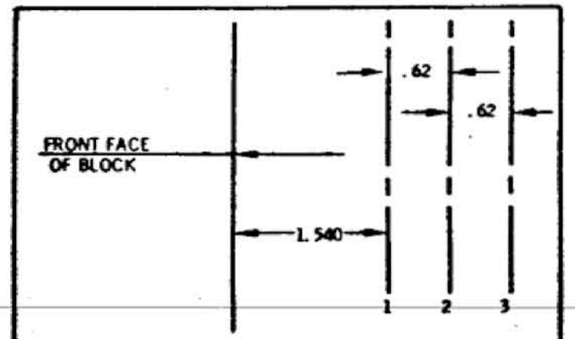

PULLEY ARRANGEMENT KEY

250 CUBIC INCH L-6 | SHEET 2 OF 2

DATE	SYM	REVISION	DR.	CK.	DATE	SYM	REVISION	DR.	CK.	DATE	SYM	REVISION	DR.	CK.
										6-8-66	C	LINE REVISED	XA	A
										10-5-65	B	CODE WAS CJ	KG	DL
										10-5-65	A	WAS 3850680	KG	DL

CHART PULLEY & BELT DATA

DATE MAY 17, 1965
DR. BY J.D. SMITH
CHECKED
APPR.
APPR.

FIRST USED 1966 | Oldsmobile Service ILLUSTRATION | PAGE 6-L 4A
SERIES A | REF. | PART NO. 391974

OLDSMOBILE DIVISION GENERAL MOTORS CORPORATION LANSING — MICHIGAN

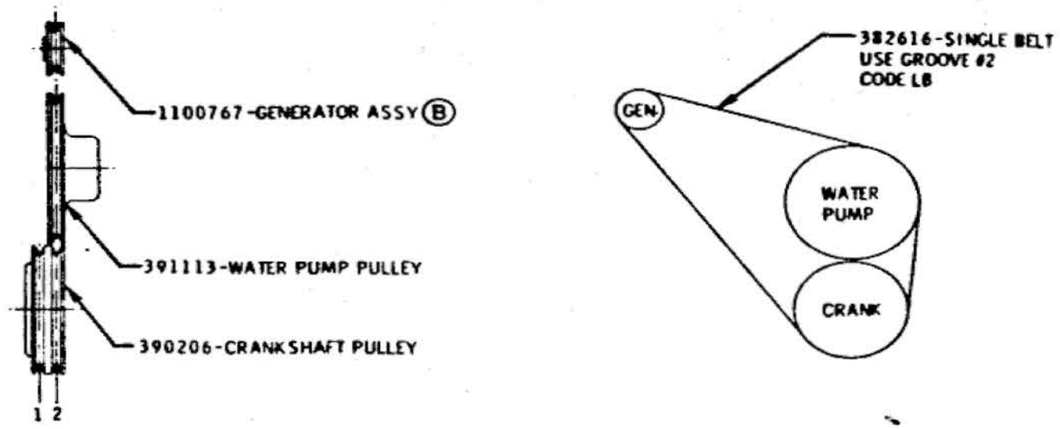

STANDARD

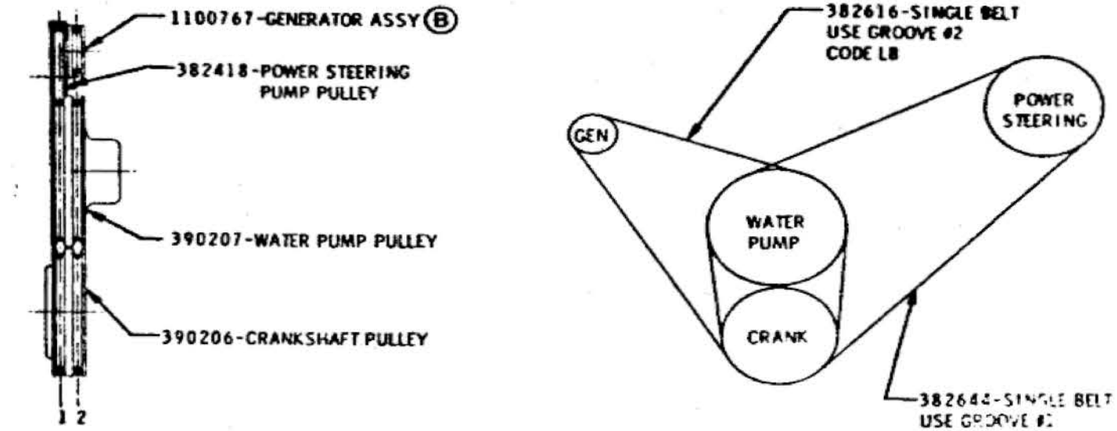

POWER STEERING

FOR ADDITIONAL PULLEY & BELT DRIVE INFORMATION, SEE PULLEY & BELT DATA CHART 391974

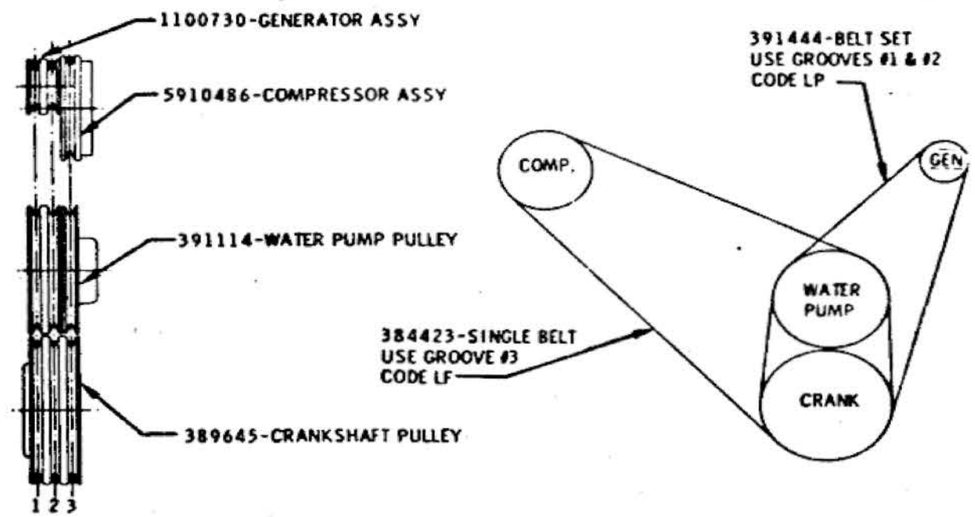

AIR CONDITIONING

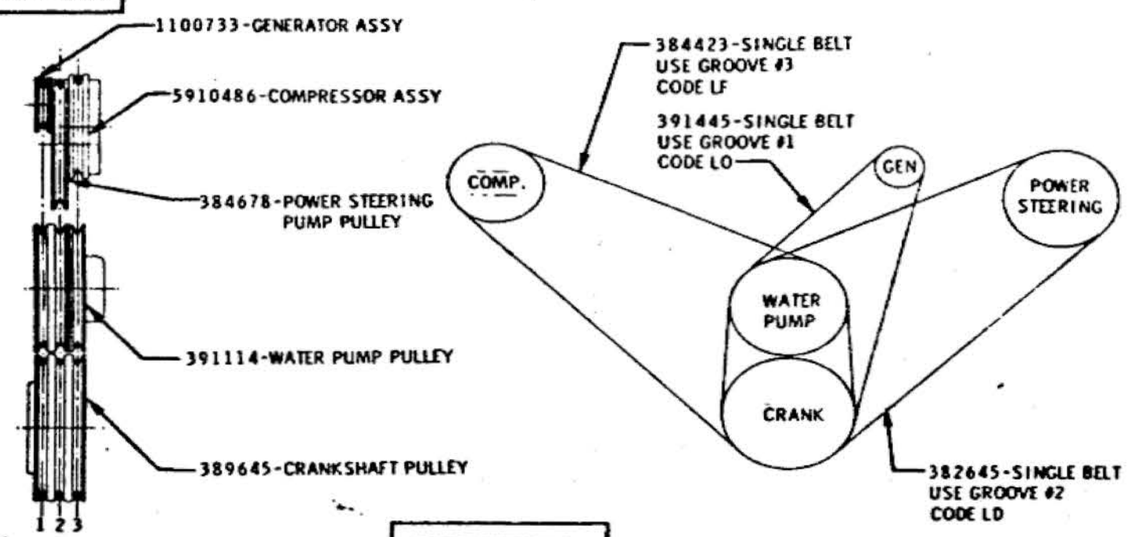

POWER STEERING WITH AIR CONDITIONING

ENGINE-330 CU. IN. V8
COLOR-GOLD

DATE	SYM	REVISION	DR.	CK.	DATE	SYM	REVISION	DR.	CK.	DATE	SYM	REVISION	DR.	CK.
										11-3-65	B	WAS 1100705		JP
										8-27-65	A	WAS SHEET 1 OF 6		JLG

CHART	PULLEY & BELT DIAGRAM		SHEET 1 OF 9
DATE JAN. 14, 1966	FIRST USED 1966	Oldsmobile Service ILLUSTRATION	PAGE 6-1.5
DR. BY GALE GRAY			
CHECKED	SERIES A	REF.	PART NO. 391988
APPR.			
APPR.			

OLDSMOBILE DIVISION GENERAL MOTORS CORPORATION LANSING — MICHIGAN

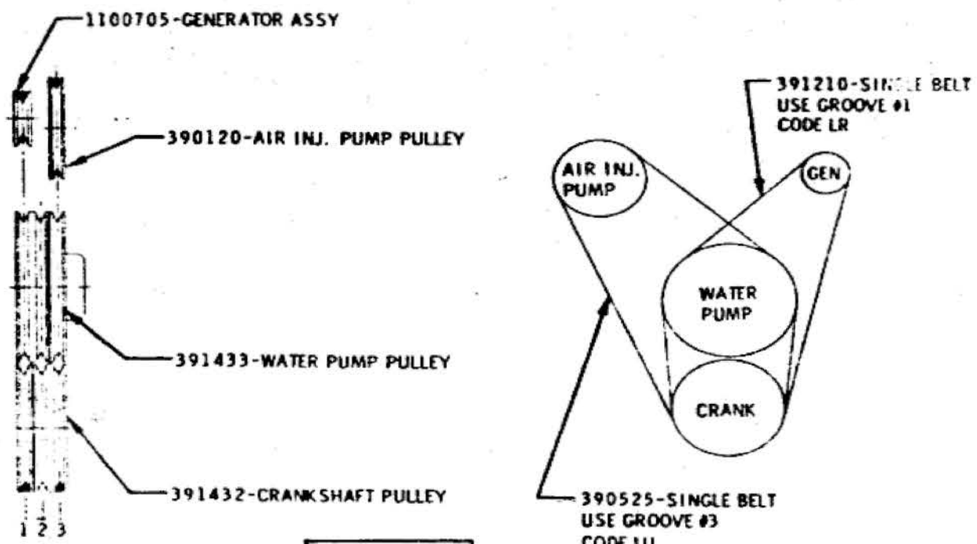

STANDARD WITH AIR INJ. PUMP

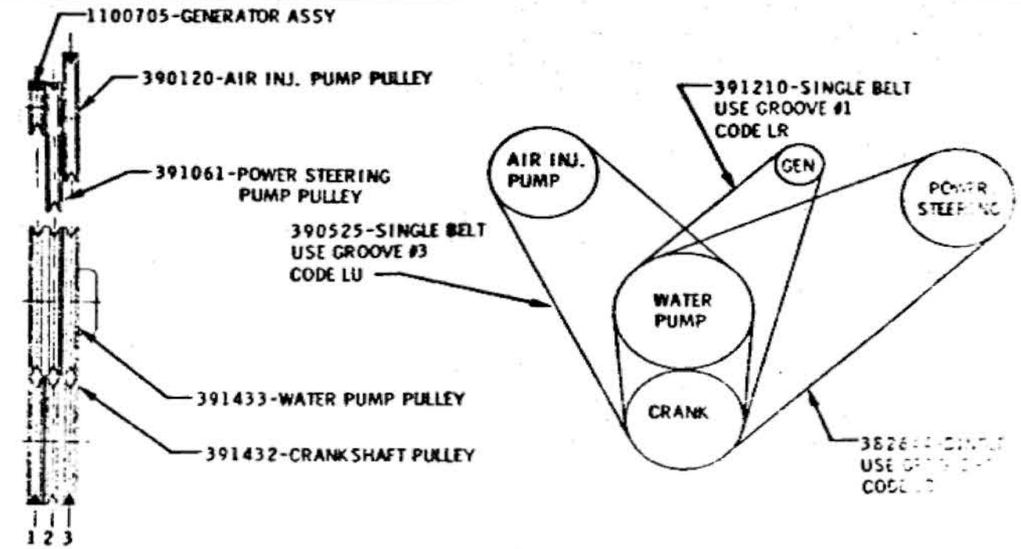

POWER STEERING WITH AIR INJ. PUMP

FOR ADDITIONAL PULLEY & BELT DRIVE INFORMATION, SEE PULLEY & BELT DATA CHART 391974

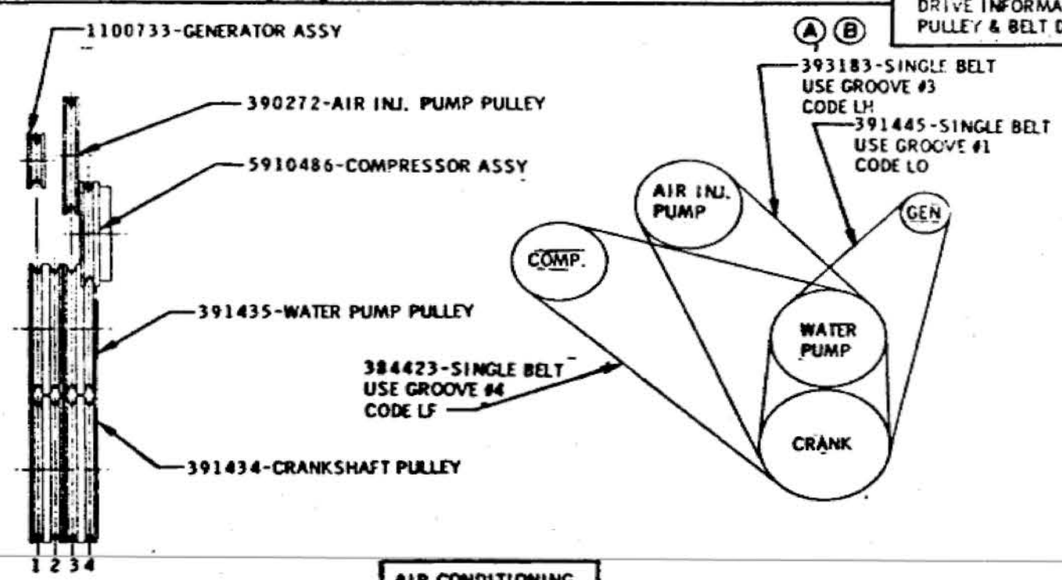

AIR CONDITIONING WITH AIR INJ. PUMP

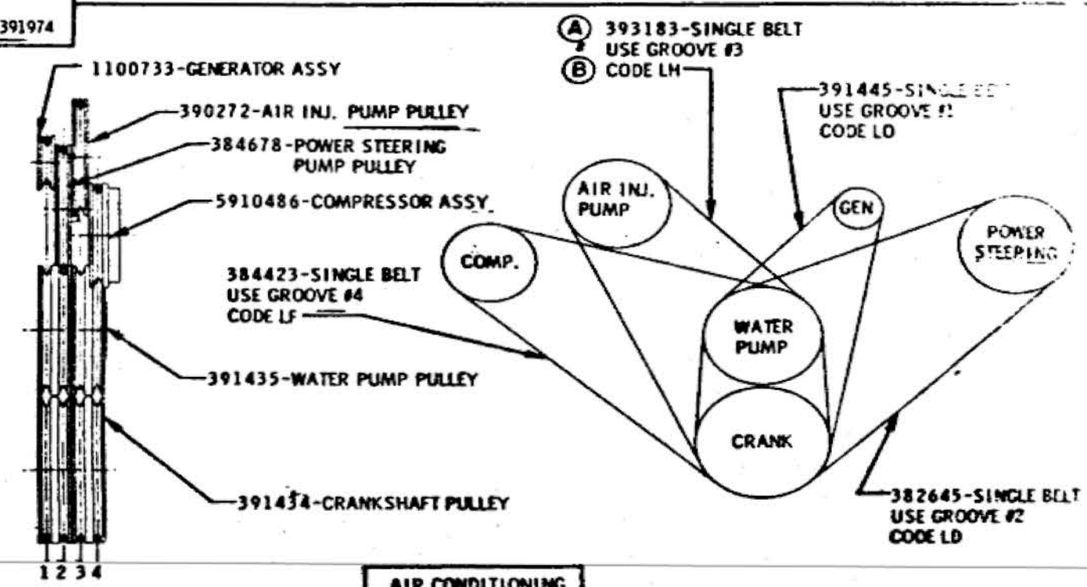

AIR CONDITIONING AND POWER STEERING WITH AIR INJ. PUMP

ENGINE-330 CU. IN. V8
COLOR-GOLD

DATE	SYM	REVISION	DR.	CK.	DATE	SYM	REVISION	DR.	CK.	DATE	SYM	REVISION	DR.	CK.
										8-23-65	B	WAS CODE 'LV'	RG	JKG
										8-10-65	A	WAS 390540	RG	JKG

CHART PULLEY & BELT DIAGRAM — SHEET 2 OF 9

DATE JAN. 14, 1965
DR. BY GALE GRAY
CHECKED
APPR.
APPR.

FIRST USED 1966 — Oldsmobile Graphic Illustration

SERIES A — REV. — PAGE 6-16 — PART NO. 391988

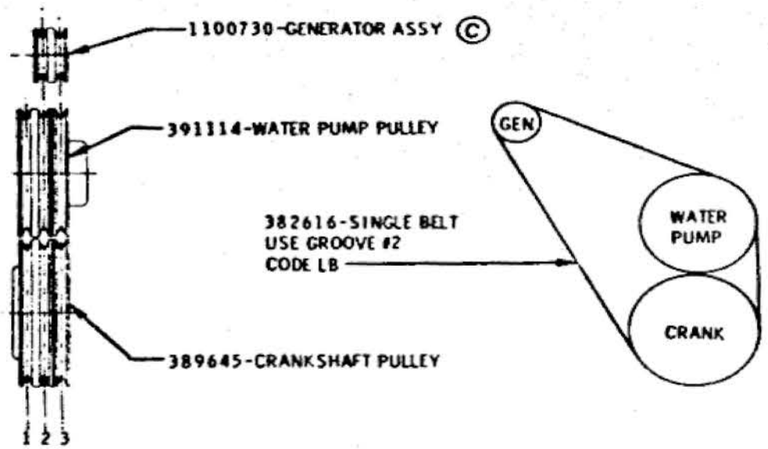

HEAVY DUTY GENERATOR AND ENGINE COOLING

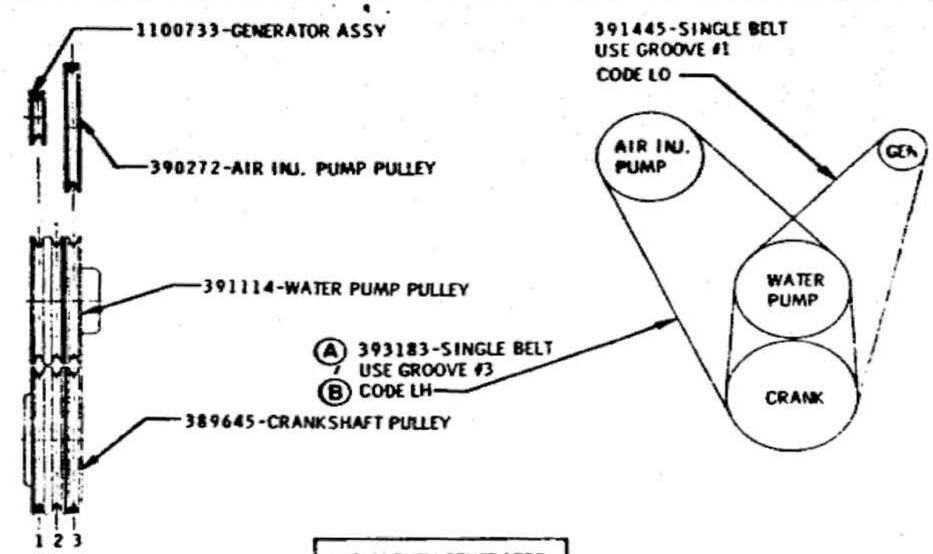

HEAVY DUTY GENERATOR AND ENGINE COOLING WITH AIR INJ. PUMP

FOR ADDITIONAL PULLEY & BELT DRIVE INFORMATION, SEE PULLEY & BELT DATA CHART 391974

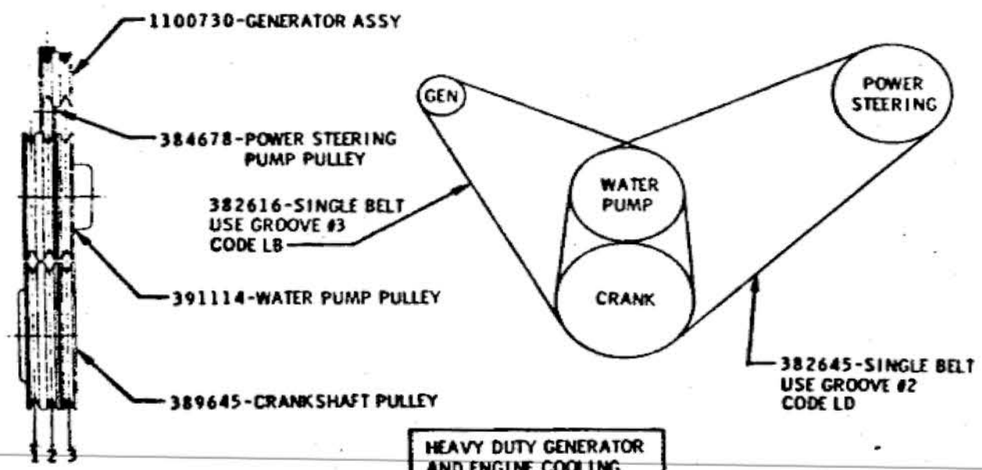

HEAVY DUTY GENERATOR AND ENGINE COOLING WITH POWER STEERING

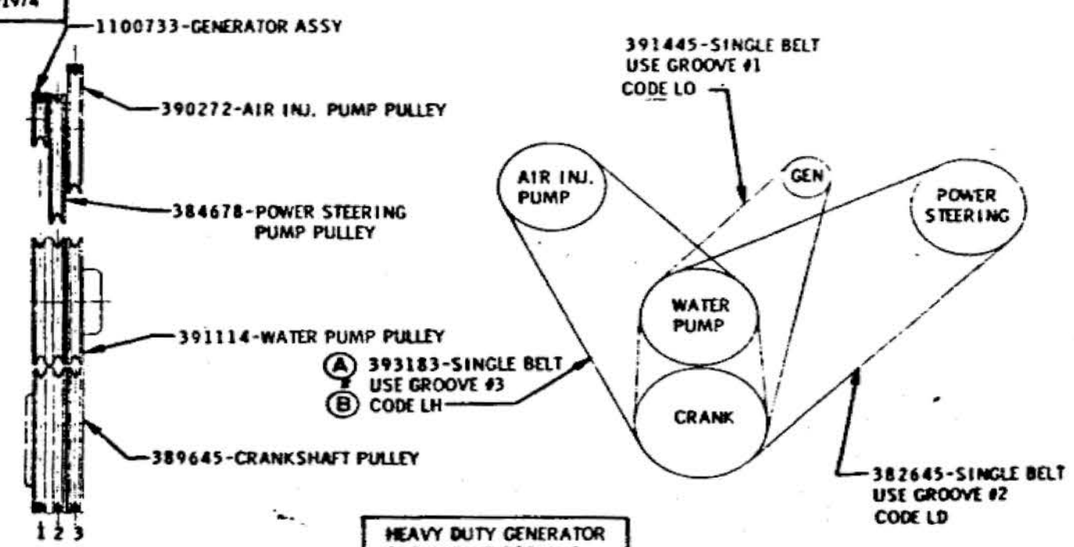

HEAVY DUTY GENERATOR AND ENGINE COOLING WITH POWER STEERING AND AIR INJ. PUMP

ENGINE-330 CU. IN. V8
COLOR-GOLD

DATE	SYM	REVISION	DR.	CK.	DATE	SYM	REVISION	DR.	CK.	DATE	SYM	REVISION	DR.	CK.
										4-3-65	C	WAS 1100733		
										8-3-65	B	WAS CODE 'LV'		
										3-10-65	A	WAS 390540		

CHART PULLEY & BELT DIAGRAM SHEET 3

DATE JAN 14, 1965
DR. BY GALE GRAY
CHECKED
APPR.
APPR.

FIRST USED 1966

Oldsmobile Service ILLUSTRATION

SERIES A

REF.

PAGE 6-2.7

PART NO. 391988

OLDSMOBILE DIVISION GENERAL MOTORS CORPORATION LANSING — MICHIGAN

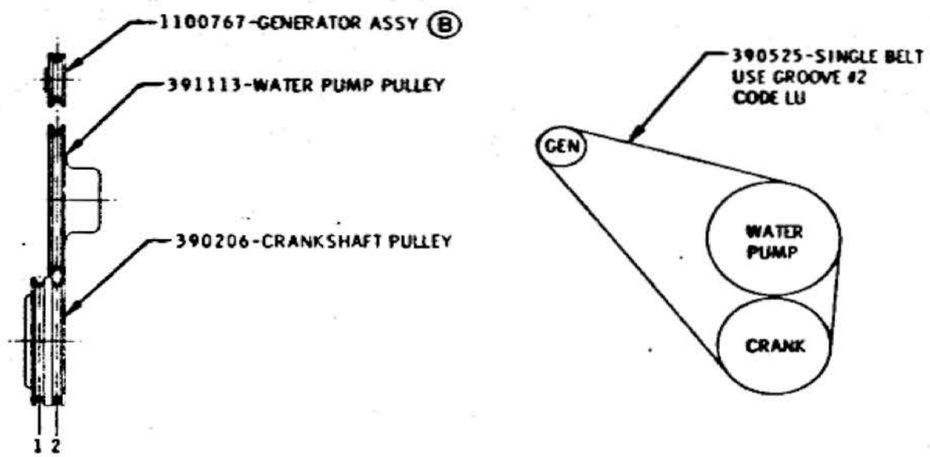

STANDARD

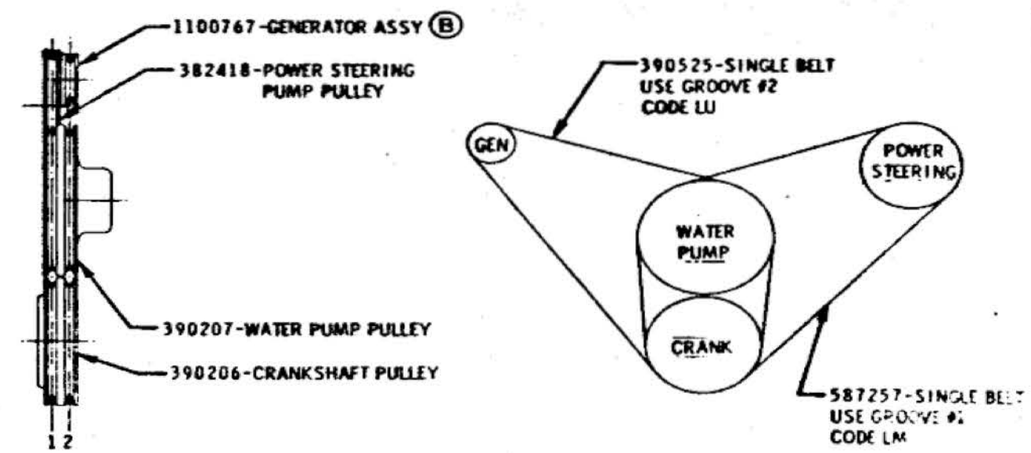

POWER STEERING

FOR ADDITIONAL PULLEY & BELT DRIVE INFORMATION, SEE PULLEY & BELT DATA CHART 391974

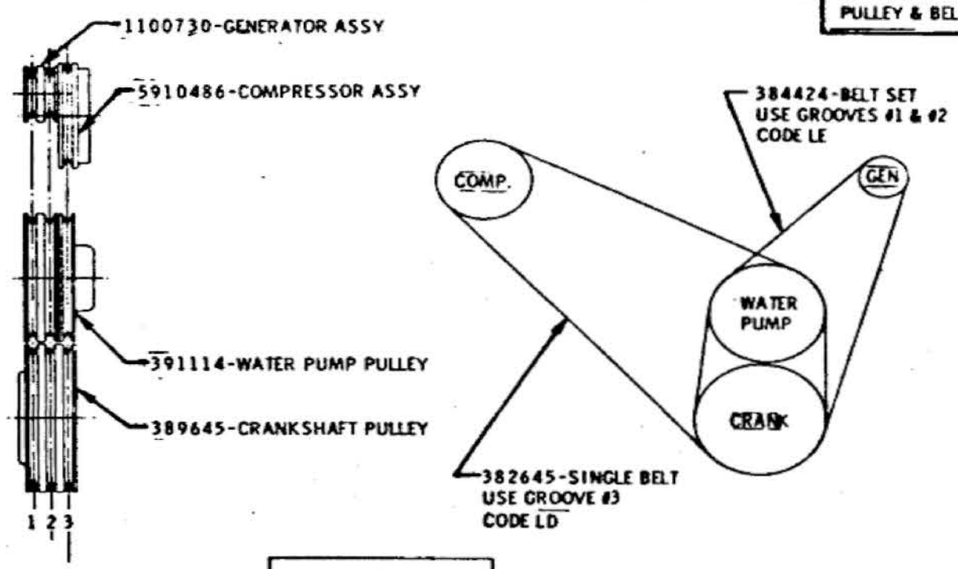

AIR CONDITIONING

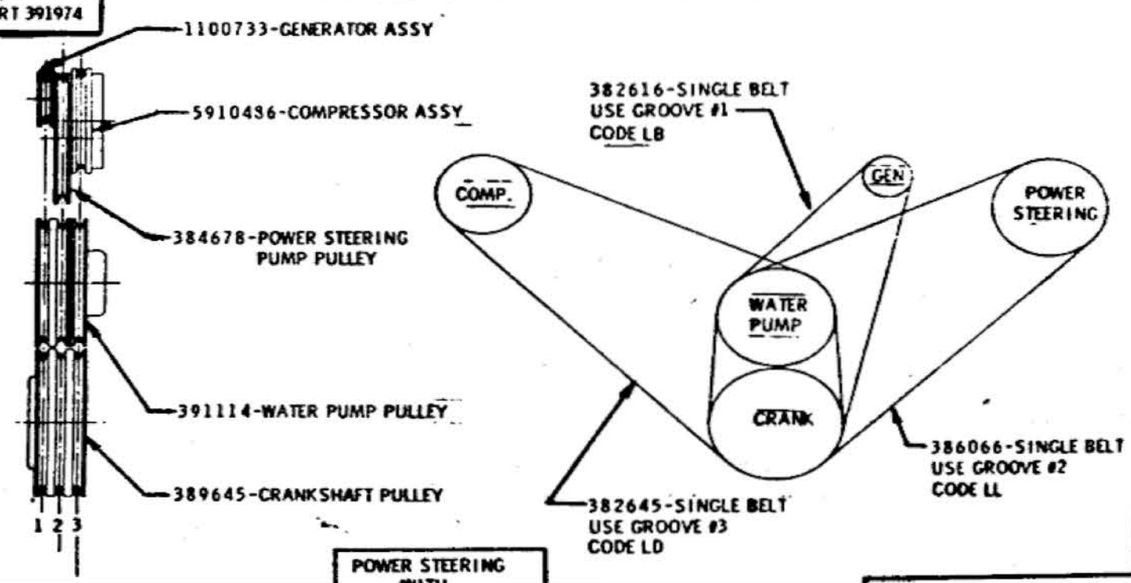

POWER STEERING WITH AIR CONDITIONING

ENGINE-400 CU. IN. V8
COLOR-BRONZE

DATE	SYM	REVISION	DR.	CK.	DATE	SYM	REVISION	DR.	CK.	DATE	SYM	REVISION	DR.	CK.
										4-3-65	B	WAS 1100705	RG	A
										8-27-65	A	WAS SHEET 4 OF 6	RG	KG

CHART	PULLEY & BELT DIAGRAM		SHEET 4
DATE JAN. 14, 1965	FIRST USED 1966	Oldsmobile Graphic Illustration	PAGE 6-L8
DR. BY GALE GRAY			
CHECKED	SERIES A	REF.	PART NO. 391988
APPR.			
APPR.			

OLDSMOBILE DIVISION GENERAL MOTORS CORPORATION LANSING — MICHIGAN

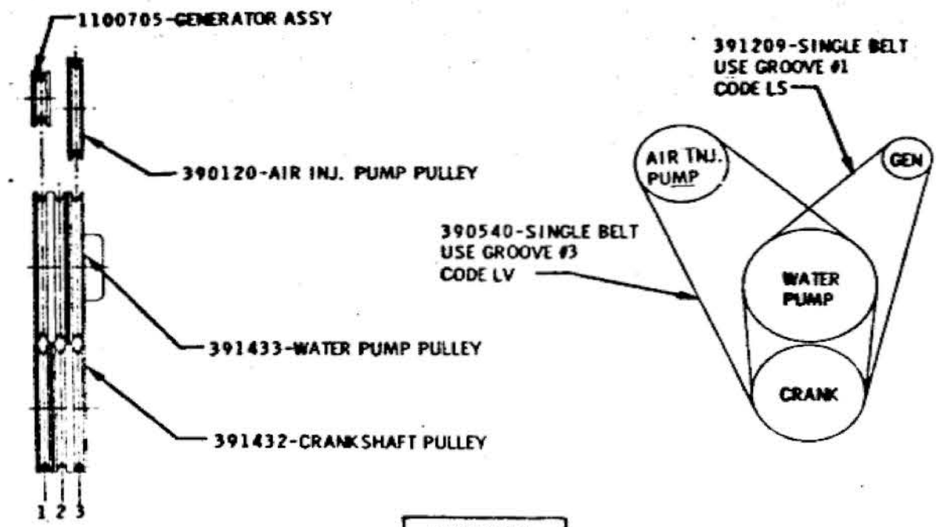

STANDARD WITH AIR INJ. PUMP

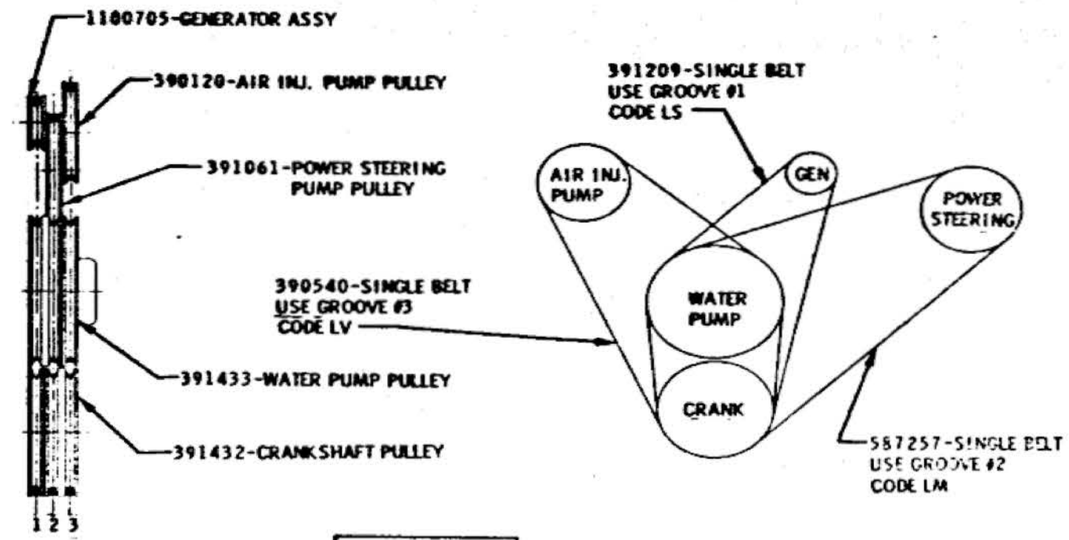

POWER STEERING WITH AIR INJ. PUMP

FOR ADDITIONAL PULLEY & BELT DRIVE INFORMATION, SEE PULLEY & BELT DATA CHART 391974

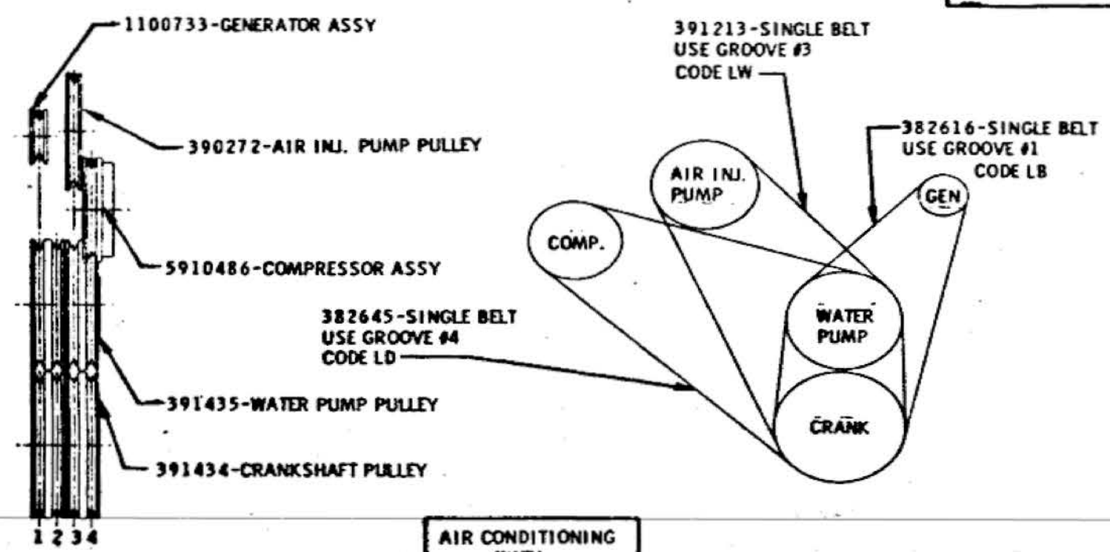

AIR CONDITIONING WITH AIR INJ. PUMP

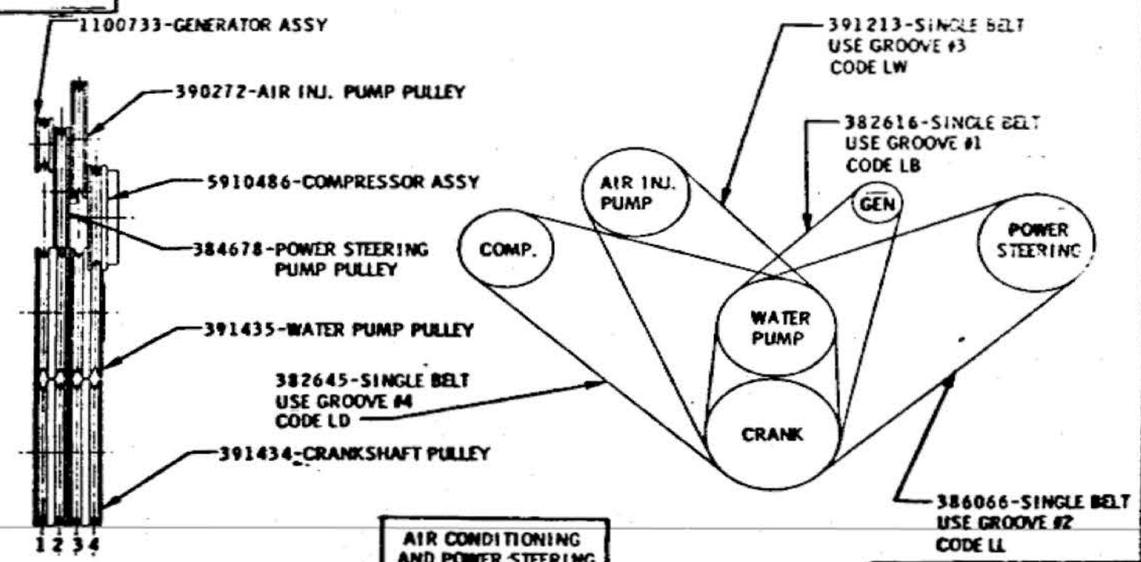

AIR CONDITIONING AND POWER STEERING WITH AIR INJ. PUMP

ENGINE-400 CU. IN. V8
COLOR-BRONZE

DATE	SYM	REVISION	DR.	CK.	DATE	SYM	REVISION	DR.	CK.	DATE	SYM	REVISION	DR.	CK.
										8-27-65	A	WAS SHEET 5 OF 6		KG

CHART PULLEY & BELT DIAGRAM SHEET 5

DATE JAN 14, 1965
DR. BY GALE GRAY
CHECKED
APPR.
APPR.

FIRST USED 1966 — Oldsmobile Graphic ILLUSTRATION

SERIES A — REF.

PAGE 6-L9

PART NO. 391988

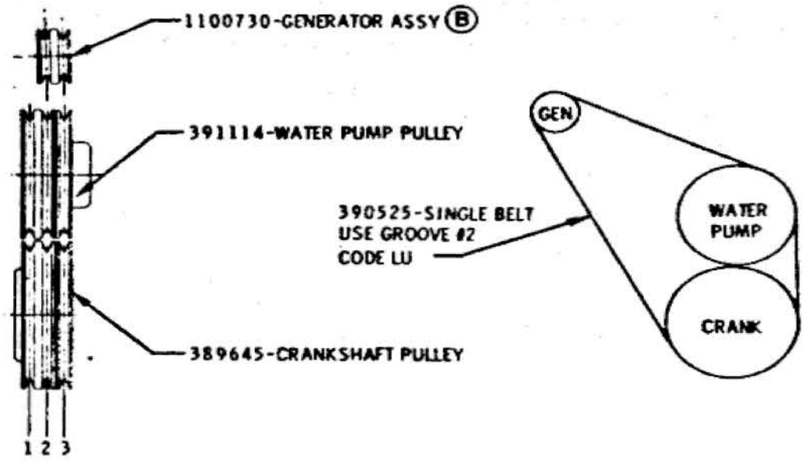

HEAVY DUTY GENERATOR AND ENGINE COOLING

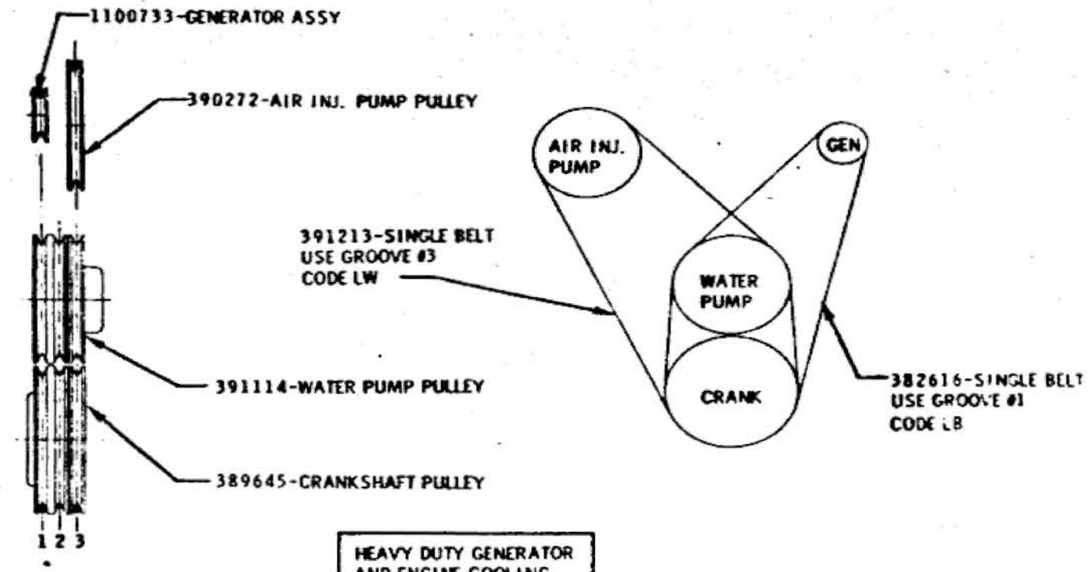

HEAVY DUTY GENERATOR AND ENGINE COOLING WITH AIR INJ. PUMP

FOR ADDITIONAL PULLEY & BELT DRIVE INFORMATION, SEE PULLEY & BELT DATA CHART 391974

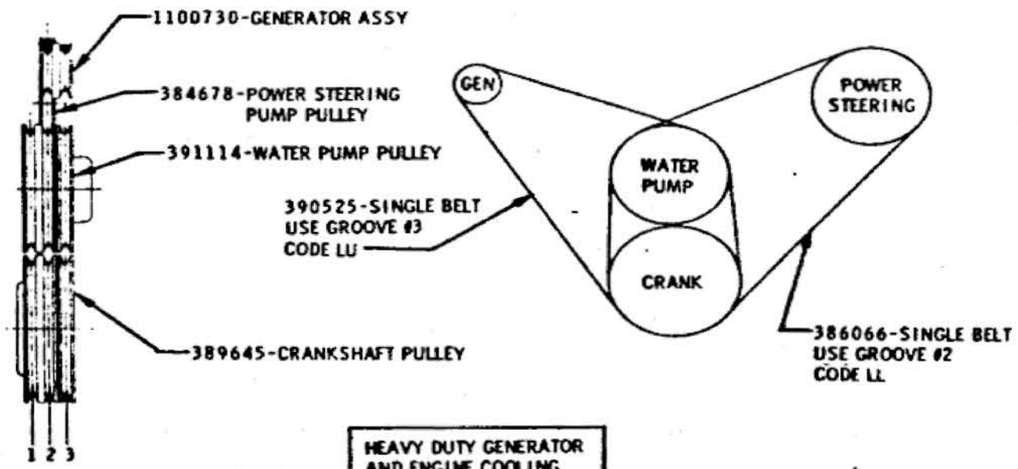

HEAVY DUTY GENERATOR AND ENGINE COOLING WITH POWER STEERING

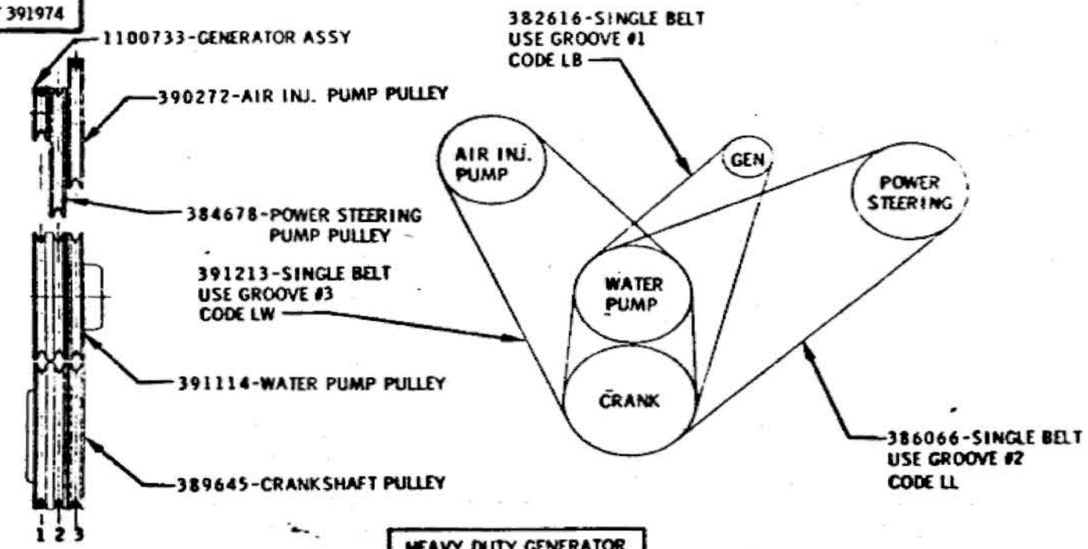

HEAVY DUTY GENERATOR AND ENGINE COOLING WITH POWER STEERING AND AIR INJ. PUMP

ENGINE-400 CU. IN. V8
COLOR-BRONZE

DATE	SYM	REVISION	DR.	CK.	DATE	SYM	REVISION	DR.	CK.	DATE	SYM	REVISION	DR.	CK.
										4-29-65	B	WAS 1100733	RJF	
										8-27-65	A	WAS SHEET 6 OF 6	RJG	

CHART	PULLEY & BELT DIAGRAM		SHEET 6
DATE JAN. 14, 1966	FIRST USED 1966	Oldsmobile Service ILLUSTRATION	PAGE 6-1.10
DR. BY GALE GRAY			
CHECKED	SERIES A	REF.	PART NO. 391988
APPR.			
APPR.			

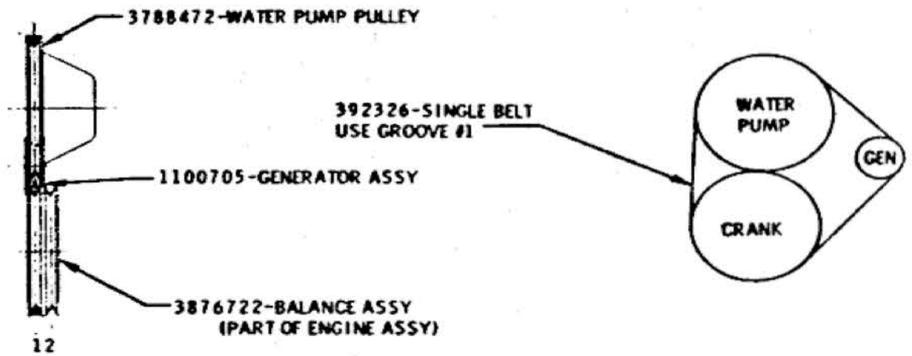

STANDARD

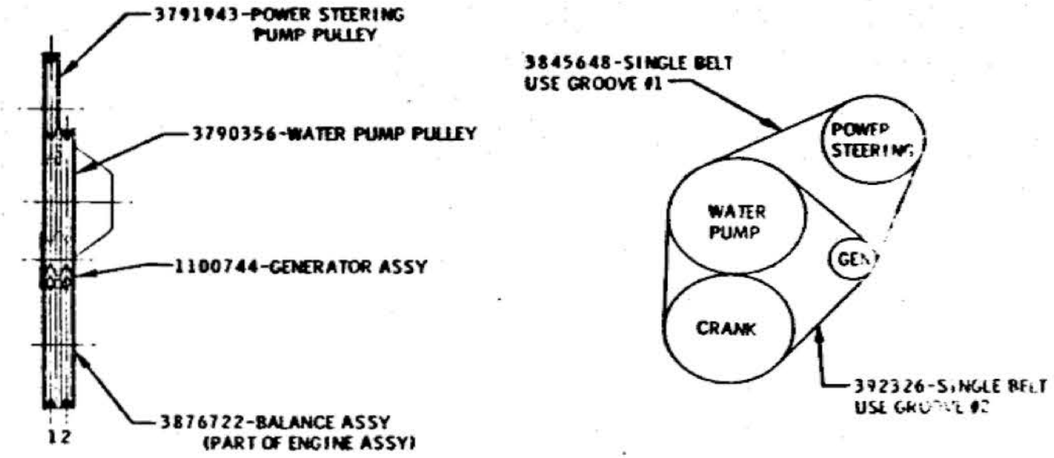

POWER STEERING

FOR ADDITIONAL PULLEY & BELT DRIVE INFORMATION, SEE PULLEY & BELT DATA CHART 391974

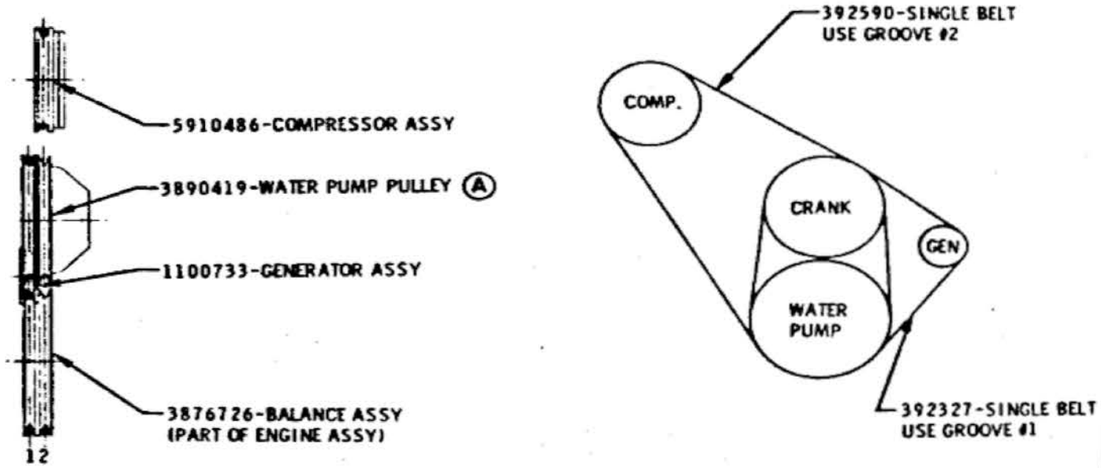

AIR CONDITIONING

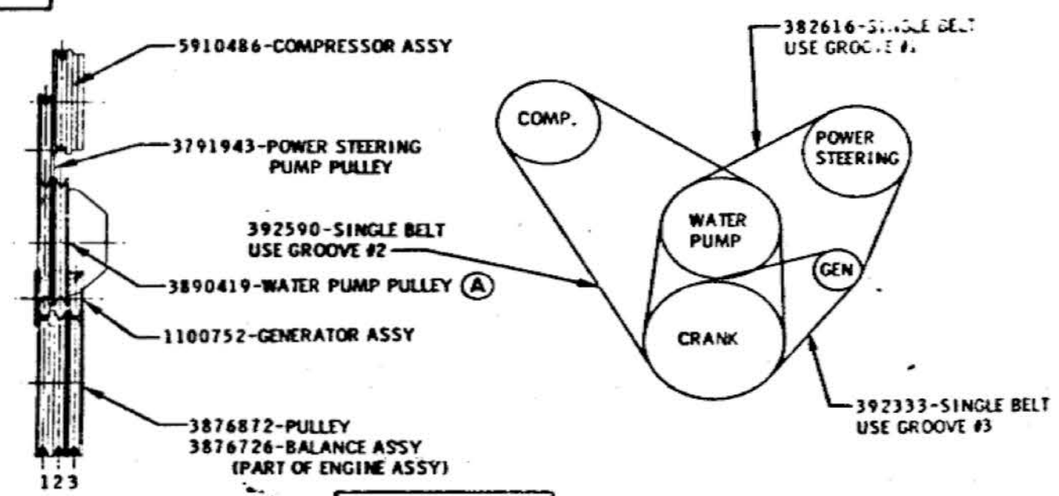

POWER STEERING WITH AIR CONDITIONING

ENGINE - 250 CU. IN. L6
COLOR - GOLD

DATE	SYM	REVISION	DR	CK	DATE	SYM	REVISION	DR.	CK.	DATE	SYM	REVISION	DR.	CK.
										10-565A2		WAS 3850680	LG	DL

CHART	BELT & PULLEY DIAGRAM		SHEET 7
DATE APRIL 23, 1965	FIRST USED 1966	Oldsmobile Service ILLUSTRATION	PAGE 6-L 11
DR. BY GALE GRAY			
CHECKED			
APPR.	SERIES A	REF.	PART NO. 391988
APPR.			

OLDSMOBILE DIVISION GENERAL MOTORS CORPORATION LANSING — MICHIGAN

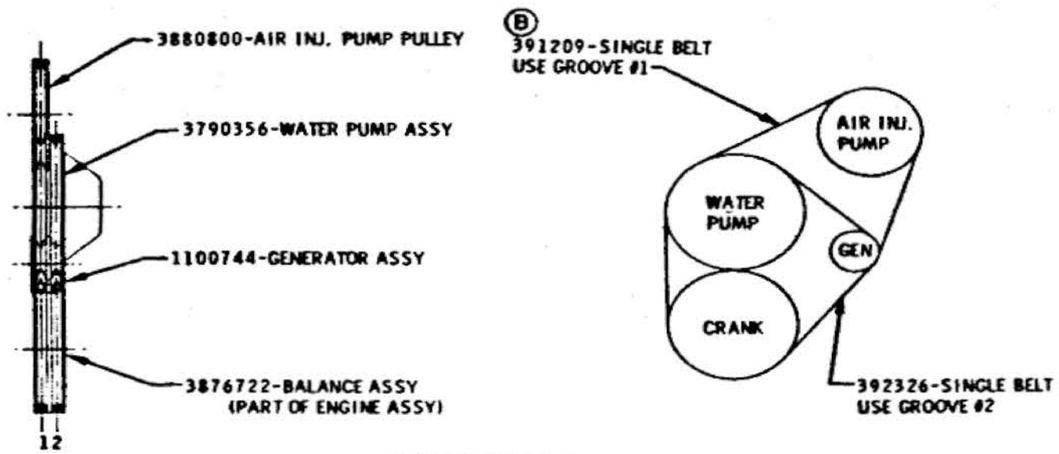

STANDARD WITH AIR INJ. PUMP

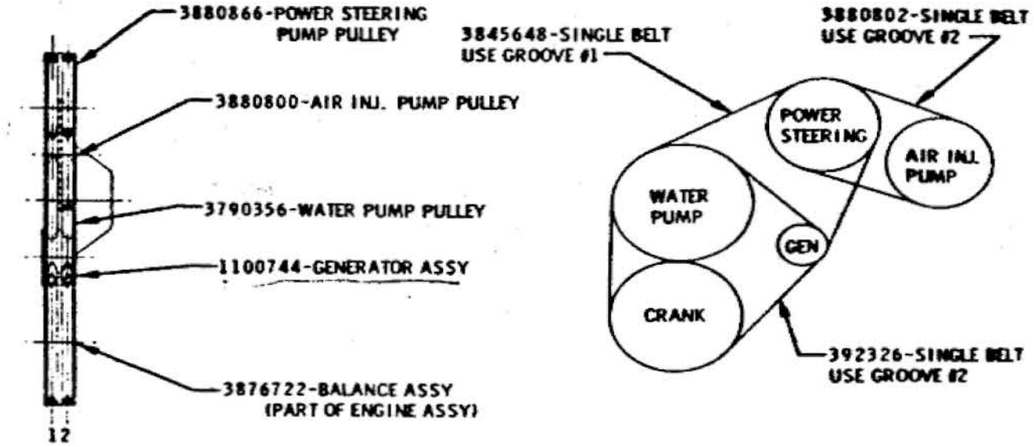

POWER STEERING WITH AIR INJ. PUMP

FOR ADDITIONAL PULLEY & BELT DRIVE INFORMATION, SEE PULLEY & BELT DATA CHART 391974

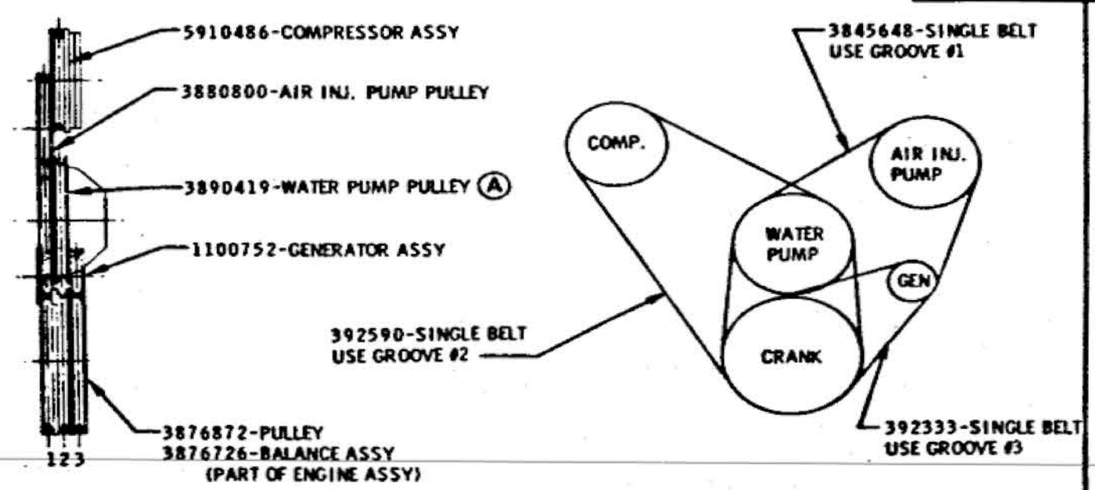

AIR CONDITIONING WITH AIR INJ. PUMP

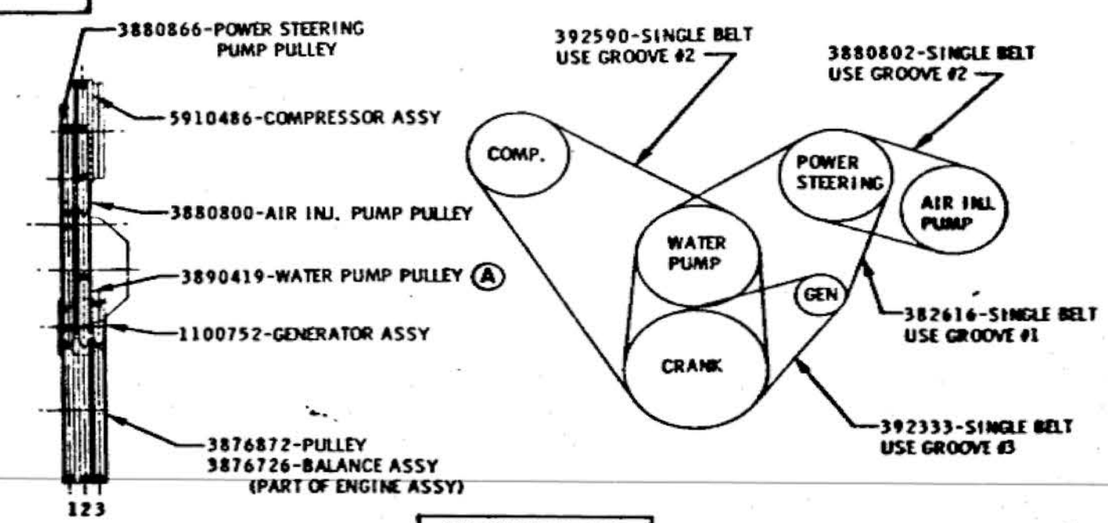

AIR CONDITIONING AND POWER STEERING WITH AIR INJ. PUMP

ENGINE-250 CU. IN. L6
COLOR - GOLD

DATE	SYM	REVISION	DR.	CK.	DATE	SYM	REVISION	DR.	CK.	DATE	SYM	REVISION	DR.	CK.
										6-8-66	B	WAS 392305	JSA	FT
										0-5-65	A2	WAS 3850680	JLG	DL

CHART	BELT & PULLEY DIAGRAM		SHEET #
DATE APRIL 23, 1965	FIRST USED 1966	Oldsmobile GRAPHIC ILLUSTRATION	PAGE 6-L.12
DR. BY GALE GRAY			
CHECKED B. L. Ford	SERIES A	REF.	PART NO. 391988
APPR.			
APPR.			

OLDSMOBILE DIVISION GENERAL MOTORS CORPORATION LANSING — MICHIGAN

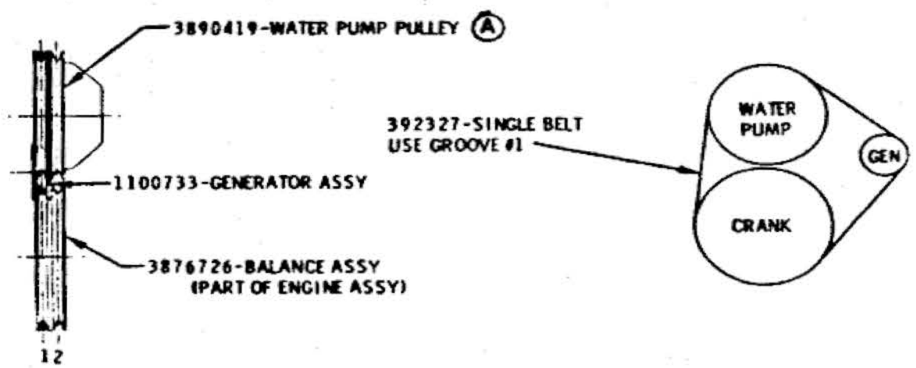

HEAVY DUTY GENERATOR AND ENGINE COOLING

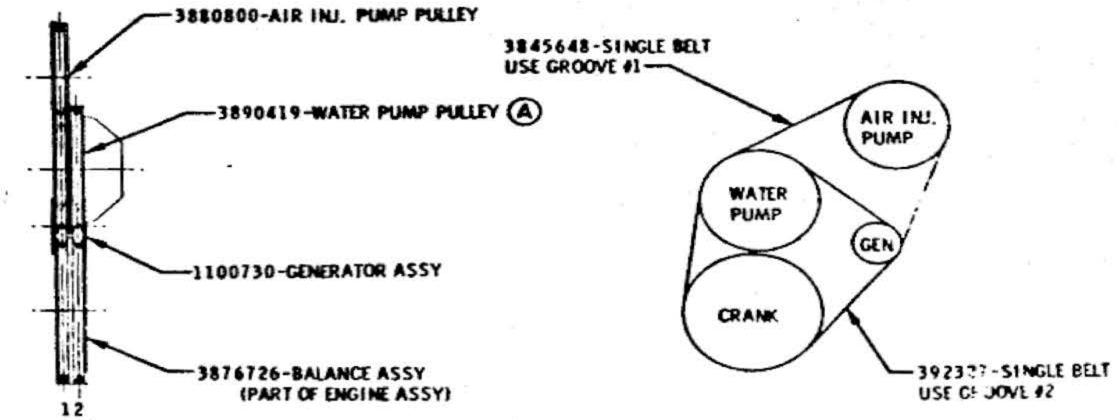

HEAVY DUTY GENERATOR AND ENGINE COOLING WITH AIR INJ. PUMP

FOR ADDITIONAL PULLEY & BELT DRIVE INFORMATION, SEE PULLEY & BELT DATA CHART 391974

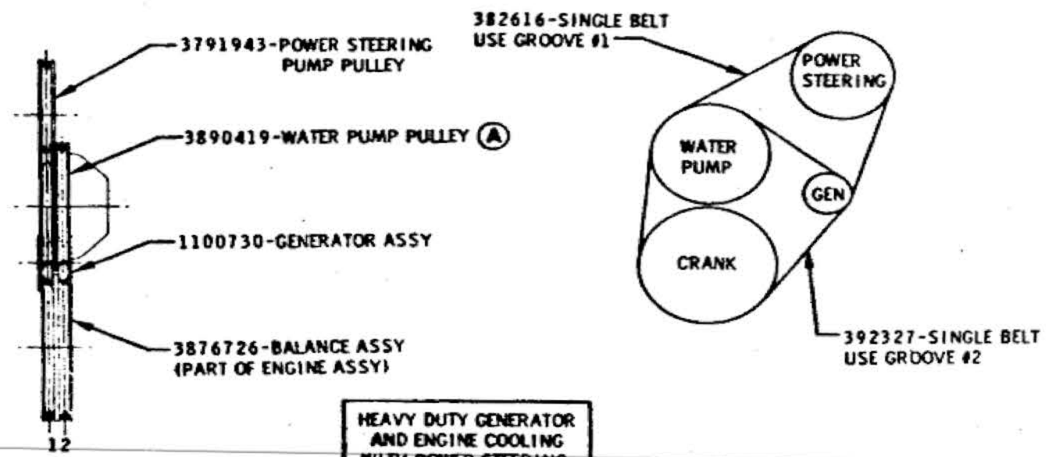

HEAVY DUTY GENERATOR AND ENGINE COOLING WITH POWER STEERING

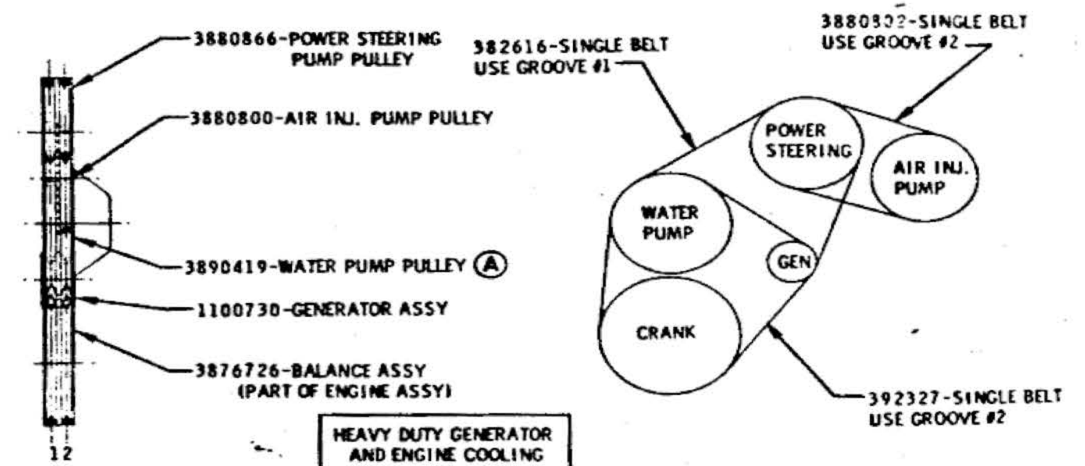

HEAVY DUTY GENERATOR AND ENGINE COOLING WITH POWER STEERING AND AIR INJ. PUMP

ENGINE-250 CU. IN. L6
COLOR - GOLD

DATE	SYM	REVISION	DR.	CK.	DATE	SYM	REVISION	DR.	CK.	DATE	SYM	REVISION	DR.	CK.
										10-5-65	A4	WAS 3850680	VG	DL

CHART	BELT & PULLEY DIAGRAM		SHEET 9
DATE APRIL 23, 1965	FIRST USED 1966	Oldsmobile Service ILLUSTRATION	PAGE 6-L 13
DR. BY GALE GRAY	SERIES A	REV.	PART NO. 391988
CHECKED			
APPR.			
APPR.			

I. SLOW IDLE ADJUSTMENT

A. REQUIRED CONDITIONS

1. ENGINE TO BE WARM.
2. THROTTLE RETURN SPRING TO BE EFFECTIVELY HOLDING THROTTLE LEVER AGAINST SLOW IDLE ADJUSTING SCREW STOP.
3. WHILE SETTING IDLE ON CARS EQUIPPED WITH JT TRANSMISSION, CARBURETOR ROD IS TO HAVE A PRELIMINARY ADJUSTMENT SO THAT THE "HI ANGLE" VARIABLE VANE FUNCTION (BLACK WIRE) IS ENERGIZED.
4. CAUTION: G-67 (AUTOMATIC SUPERLIFT REAR SHOCK ABSORBERS) VACUUM PUMP MUST BE INOPERATIVE WHEN ADJUSTING SLOW IDLE SPEED.

B. ADJUSTMENT

1. ADJUST THE SLOW IDLE SCREW TO OBTAIN THE FOLLOWING R. P. M.

TRANS.	AIR COND.	A. I. R.	RANGE	R. P. M.
SM & FS EXC. L69	WITHOUT	N. A.	N	600
SM & FS EXC. L69	WITH	N. A.	N	600 *
SM & FS WITH L69	WITHOUT	N. A.	N	600
SM & FS WITH L69	WITH	N. A.	N	700 *
JT EXC. L77, L78	WITHOUT	WITHOUT	DR	500
JT EXC. L77, L78	WITH	WITHOUT	DR	575 *
JT EXC. L77, L78	WITHOUT	WITH	DR	600
JT EXC. L77, L78	WITH	WITH	DR	600 *
JT WITH L77, L78	WITHOUT	WITHOUT	DR	550
JT WITH L77, L78	WITH	WITHOUT	DR	600 *
JT WITH L77, L78	WITHOUT	WITH	DR	600
JT WITH L77, L78	WITH	WITH	DR	600 *

* AIR CONDITIONING "OFF" AND THE COMPENSATOR OR CARB-AIRATOR VALVE HELD CLOSED.

II. FAST IDLE ADJUSTMENT

A. REQUIRED CONDITIONS

1. TRANSMISSION IN NEUTRAL
2. ENGINE TO BE WARM.
3. THROTTLE RETURN SPRING LOAD TO BE EFFECTIVELY HOLDING THROTTLE LEVER FAST IDLE SCREW ON PROPER STEP OF FAST IDLE CAM.

B. ADJUSTMENT

1. ADJUST FAST IDLE WITH SCREW ON LOWEST STEP OF FAST IDLE CAM AND RESTING AGAINST THE NEXT HIGHER STEP TO OBTAIN THE FOLLOWING R. P. M.

CARB.	TRANS.	CAM STEP	RANGE	R. P. M.
2	SM, FS & JT	LOW	N	900
4	SM, FS & JT	LOW	N	700

III. CARBURETOR ROD ADJUSTMENT

A. REQUIRED CONDITIONS

1. SLOW IDLE TO BE PROPERLY ADJUSTED.
2. FAST IDLE CAM POSITIONED TO ALLOW THROTTLE RETURN SPRING TO HOLD THROTTLE LEVER IN "SLOW IDLE" POSITION.

B. ADJUSTMENT SM & FS CARS

1. ADJUST CARBURETOR ROD TO OBTAIN A DIMENSION OF 4.32 ± .060 FROM A PERPENDICULAR TO THE FLOOR PAN UNDER THE ACCELERATOR TO THE CENTER OF THE ROLLER ON THE ACCELERATOR LEVER.
2. HORIZONTAL SURFACE OF BELLCRANK WILL BE EVEN WITH TOP HORIZONTAL SURFACE OF ROD & BRACKET ASSEMBLY.

(L) C. ADJUSTMENT JT CARS

1. ADJUST CARBURETOR ROD LONG UNTIL VARIABLE VANE FUNCTION (BLACK WIRE) IS NOT ENERGIZED (TEST LIGHT OFF). NEXT, SLOWLY SHORTEN ROD UNTIL CIRCUIT IS JUST ENERGIZED (LIGHT ON). CONTINUE TO SHORTEN ROD TWO COMPLETE TURNS FURTHER AND TIGHTEN LOCK NUT SECURELY. (TORQUE NUT TO 60 - 84 LB. IN.).

FOR ABOVE ADJUSTMENTS, USE TOOL #74416-JH (TEST LIGHT).

IV. ACCELERATOR PEDAL ADJUSTMENT

A. 1966 CAR DOES NOT REQUIRE AN ACCELERATOR PEDAL ADJUSTMENT.

(N) V. THROTTLE SWITCH DOWNSHIFT CIRCUIT ADJUSTMENT JT CARS ONLY

A. REQUIRED CONDITIONS

1. SLOW IDLE SPEED, CARBURETOR ROD AND ACCELERATOR PEDAL CHECKED.

B. ADJUSTMENT

1. PERFORM THE FOLLOWING PROCEDURE TO PREPOSITION THE INTERNAL SWITCH:

   LITTELFUSE & DELCO-REMY SWITCH - DISCONNECT CARBURETOR ROD AND MOVE LEVER ON SWITCH IN CLOSED THROTTLE DIRECTION UNTIL LEVER HITS STOP. CONNECT CARBURETOR ROD WITHOUT MOVING LEVER TO WIDE OPEN THROTTLE POSITION.
2. PUSH ACCELERATOR PEDAL TO WIDE OPEN POSITION TO SET AND ENERGIZE DOWNSHIFT CIRCUIT (WHITE WIRE).

** VI. DASHPOT ADJUSTMENT JT CARS ONLY - 4 BBL A/C ONLY

A. REQUIRED CONDITIONS

(K) 1. FAST IDLE SET AT 700 R. P. M. ON LOWEST STEP OF FAST IDLE CAM AND SCREW RESTING ON RISE TO NEXT HIGHER STEP.
2. ENGINE OFF AND FAST IDLE SCREW ON HIGHEST STEP.

B. ADJUSTMENT

1. ADJUST DASHPOT SO IT JUST CONTACTS THROTTLE LEVER.

** VII. DASHPOT ADJUSTMENT JT CARS ONLY - 2 BBL

A. REQUIRED CONDITIONS

1. SLOW IDLE SET.
2. ENGINE OFF, DASHPOT FULLY COMPRESSED.

B. ADJUSTMENT

1. ADJUST DASHPOT FOR .060 CLEARANCE BETWEEN DASHPOT AND THROTTLE LEVER.

- ALTERNATE METHOD -

(M) A. REQUIRED CONDITIONS

1. FAST IDLE SET AT 900 R. P. M. ON LOWEST STEP OF FAST IDLE CAM AND SCREW RESTING AGAINST THE NEXT HIGHER STEP.
2. ENGINE OFF AND FAST IDLE SCREW ON HIGHEST STEP.

B. ADJUSTMENT

1. ADJUST DASHPOT SO IT JUST CONTACTS THROTTLE LEVER AND THEN GO (2) TURNS FATHER INTO THE LEVER.

** NO DASHPOT USED WITH K-19.

2 & 4 BBL (V8)

SHEET 1 OF 2

DATE	SYM	REVISION	DR.	CK.	DATE	SYM	REVISION	DR.	CK.	DATE	SYM	REVISION	DR.	CK.
					1-14-66	K	WAS 600 R.P.M.	JG	JP	12-27-65	E3	NOTES REVISED	CG	JP
					12-9-65	J2	NOTES ADDED	JJ	JP	6-22-65	D	SHT. 1 OF 2 ADDED	JJ	JP
3-30-64	N	NOTE REVISED	CG	JP	8-17-65	H	WAS 575 R.P.M.	JJ	JG	5-7-65	C	NOTE REVISED	RS	JP
2-15-64	M	NOTE REVISED	RS	JP	8-3-65	G	WAS 550 R.P.M.	JG	JP	5-7-65	B	WAS PAGE NO. 0-1.7	RS	JP
2-7-64	L	NOTE REVISED	CG	JP	8-3-65	F	WAS 600 R.P.M.	JG	JP	4-27-65	A	ITEM 4. ADDED	CG	JP

CHART — THROTTLE ADJUSTMENT

DATE APRIL 6, 1965
DR. BY GARY C. GRANDELL
CHECKED W. L. WEISS
APPR.
APPR.

FIRST USED 1966
SERIES A
REF.
PAGE 6-1.14
PART NO. 393038

1. SLOW IDLE ADJUSTMENT S. M. & J. T. CARS
   A. REQUIRED CONDITIONS
      1. ENGINE TO BE WARM.
      2. THROTTLE RETURN SPRING TO BE EFFECTIVELY HOLDING THROTTLE LEVER AGAINST SLOW IDLE ADJUSTING SCREW STOP.
   B. ADJUSTMENT
      1. ADJUST THE SLOW IDLE SCREW TO OBTAIN THE FOLLOWING R. P. M.

TRANS.	K19	AIR COND.	RANGE	R. P. M.
S. M.	WITHOUT	WITHOUT	N	500
S. M.	WITHOUT	WITH	N	550 *
J. T.	WITHOUT	WITHOUT	DR	500
J. T.	WITHOUT	WITH	DR	550 *
J. T.	WITH	WITHOUT	DR	600
J. T.	WITH	WITH	DR	650 *

* A/C OFF

250 CUBIC IN. L-6

SHEET 2 OF 2

DATE	SYM	REVISION	DR.	CK.	DATE	SYM	REVISION	DR.	CK.	DATE	SYM	REVISION	DR.	CK.

CHART THROTTLE ADJUSTMENT

DATE MAY 10, 1965
DR. BY C. GORDON
CHECKED
APPR.
APPR.

FIRST USED 1966

Oldsmobile Service ILLUSTRATION

SERIES A

REF. SM & JT

PAGE 6-L 14A

PART NO. 393038

OLDSMOBILE DIVISION GENERAL MOTORS CORPORATION LANSING — MICHIGAN

1966 330 & 400 CUBIC INCH ENGINE ASSEMBLIES CONVERSION PROCEDURES

CONVERT TO 35C60 BY THE FOLLOWING

ITEM	REMOVE	INSTALL
• BODY ASSY - WATER PUMP	386393	387239
GASKET - WATER PUMP	385936 (SCRAP)	385936
BOLT - FRONT COVER TO BLOCK	271486	(M) 394453
BRACKET - GENERATOR	389235	------
BOLTS - GEN. BRACKET (3)	9418822	------
CABLE ASSY - SPARK PLUG #2	2988276	2988278
CONNECTOR - HEATER VACUUM	103877 (PLUG)	382890
FOR 330 CU. IN. ENGINE ONLY		
NIPPLE-HEATER WATER	389159	
CARBURETOR EXCEPT K-19		
2 BBL - ALL	7026058	7026059
4 BBL (M33/34 ONLY)	7026254	7026255
CARBURETOR WITH K-19		
2 BBL - ALL	7036058	7036159
4 BBL	NOT AFFECTED	
FOR 400 CU. IN. ENGINE ONLY		
• WATER OUTLET	386129	392099
GASKET - WATER OUTLET	382544 (SCRAP)	382544
CARBURETOR WITH K19 OR SMT	NOT AFFECTED	
CARBURETOR WITH M32 EXC. K19	7026250	7026256
(P) FITTING, FUEL PUMP	143484 (TEE)	397227 (SPEC. TEE)
FITTING, FUEL PUMP (P)	-------	137423 (ELBOW) (R)

CONVERT 400 CU. IN. TO L77 (FROM L78) BY THE FOLLOWING: (AVAILABLE ONLY WITH B01 OR B07. ASSEMBLED AT LANSING ONLY)

ITEM	REMOVE	INSTALL
SPARK PLUGS (8)	5610857	5611050 (#43S)

CONVERSION FOR 400 CU. IN. L69 OPTION SAME AS BASIC ENGINE (L)

• THESE PARTS TO BE PAINTED WITH ENGINE ENAMEL.

CONVERT TO 35Y76 BY THE FOLLOWING

ITEM	REMOVE	INSTALL
• BODY ASSY - WATER PUMP	386393	387239
GASKET - WATER PUMP	385936 (SCRAP)	385936
FOR 400 CU. IN. ENGINE ONLY		
• WATER OUTLET	386129	392099
GASKET - WATER OUTLET	382544 (SCRAP)	382544

CONVERT TO 35K20 BY THE FOLLOWING

ITEM	REMOVE	INSTALL
FILTER ASSY.	6423052 (393925 OPT.)	------

CONVERT 330 CU. IN. TO L76 (FROM L74) BY THE FOLLOWING: (AVAILABLE ONLY WITH B01 OR B07. ASSEMBLED AT LANSING ONLY)

ITEM	REMOVE	INSTALL
SPARK PLUGS (8)	5610857	5611050 (#43S)

DELETE 35K19 AND 35K20 BY THE FOLLOWING

ITEM	REMOVE	INSTALL
BRACKET-GENERATOR	---	389235
BOLTS-GENERATOR BRACKET (3)	---	9418822
FILTER, VENTILATION	---	6423052 (393925 OPT.)
CAP, CARB. FITTING	---	9781338
CLIP, WIRING HARNESS	---	388218
BOLT, DASHPOT MTG. HOLE (400 C. I. AMT. ONLY)	9419029	---
PLUG, CYLINDER HEAD (8)	SHIPPING PLUG	394018

SHEET 1 OF 2

DATE	SYM	REVISION	DR.	CK.	DATE	SYM	REVISION	DR.	CK.	DATE	SYM	REVISION	DR.	CK.
5-4-66	P	WAS 143484 (TEE)	JA	JA	10-11-65	K	394453 OPT. ADDED	CG	JA	8-23-65	E	LINE ADDED		JLG
4-26-66	P	FITTING, FUEL PUMP ADDED	JA	JA	10-11-65	J	BOLT ADDED		JLG	8-12-65	D	NOTE ADDED	JJ	JA
4-15-66	N	BOARD REVISED		JA	10-11-65	H	GASKET REMOVED		JLG	7-27-65	C	FILTER ASSY. ADDED	JJ	JA
2-14-66	M	WAS 390567		JA	10-11-65	G	FUEL PUMP REMOVED		JLG	7-27-65	B	NOTES REMOVED	JJ	JA
1-20-66	L	LINE ADDED	CG	JA	10-11-65	F	BRACKET ADDED		JLG	6-9-65	A	WAS 6420722	GC	JLG

CHART — ENGINE CONVERSION

DATE MAY 14, 1965 — DR. BY GARY E. CRANDELL — CHECKED — APPR. J. LOCKWOOD — APPR.

FIRST USED 1966 — Oldsmobile Service ILLUSTRATION — SERIES A — REF. — PAGE 6-L.15 — PART NO. 393388

1966 250 CUBIC INCH (L-6) ENGINE ASSEMBLIES

CONVERSION PROCEDURES

DELETE K19 BY THE FOLLOWING		
ITEM	REMOVE	INSTALL
PLUG, CYLINDER HEAD (6)	------	3889330 (B)

(A)

DELETE K20 BY THE FOLLOWING		
ITEM	REMOVE	INSTALL
PLUG, VALVE COVER	------	3894337 (C)

SHEET 2 OF 2

DATE	SYM	REVISION	DR.	CK.	DATE	SYM	REVISION	DR.	CK.	DATE	SYM	REVISION	DR.	CK.
										3-1-69	C	W.A.S. 393525		AT
										4-2-65	B	W.A.S. 444619		JKG
										7-1-65	A	103878 REMOVED		JT

CHART ENGINE CONVERSION

DATE MAY 20 1965

DR BY GARY E. ORANDELL

CHECKED

APPR.

APPR.

FIRST USED 1966

SERIES A

REF.

PAGE 6-L 25A

PART NO. 393388

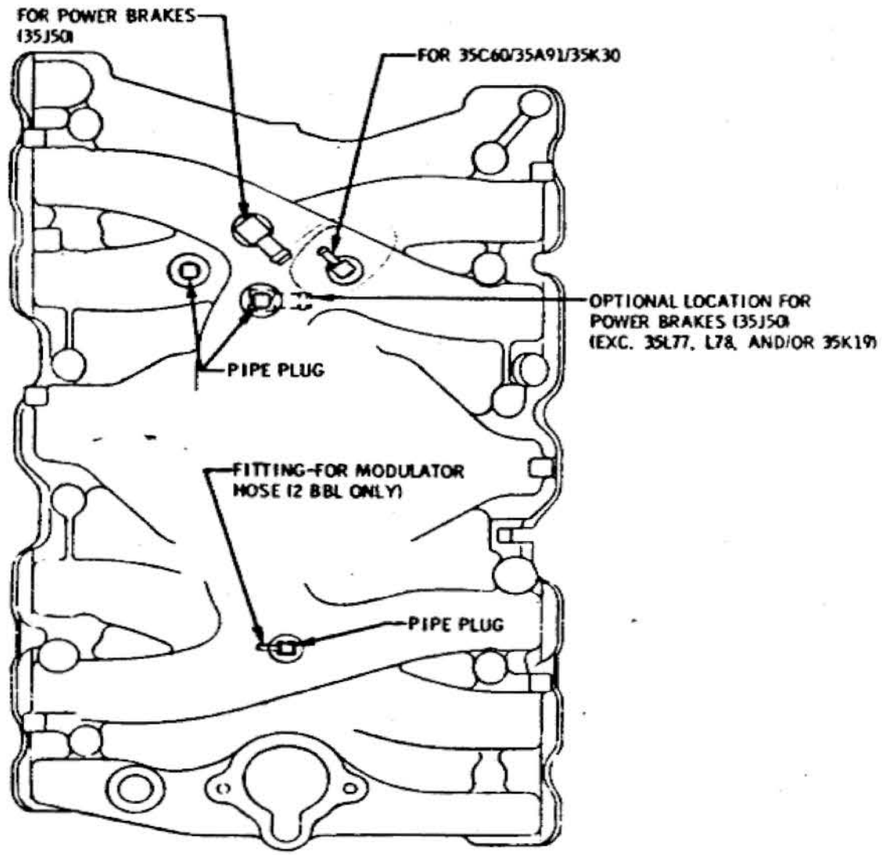

NON-35K19 ENGINE

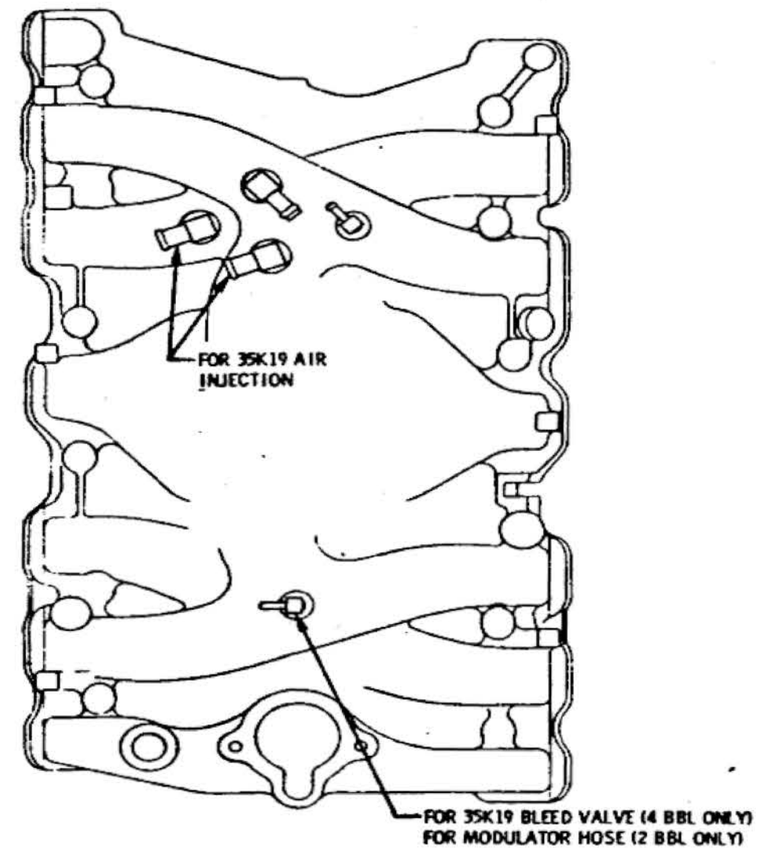

35K19 ENGINE

FRONT OF CAR

(2 BBL & 4 BBL CARB. -EXC. 35L69)

DATE	SYM	REVISION	DR.	CK.	DATE	SYM	REVISION	DR.	CK.	DATE	SYM	REVISION	DR.	CK.
										3-11-66	C	REDRAWN & REVISED		
										2-21-66	B	NOTE ADDED		
										1-31-66	A	VIEW REVISED		

CHART ENGINE VACUUM SOURCE

DATE JULY 21, 1965
DR. BY W. E. MASON
CHECKED
APPR.
APPR.

FIRST USED 1966

Oldsmobile Service ILLUSTRATION

SERIES A

REF.

PAGE 6-1.16

PART NO. 589998

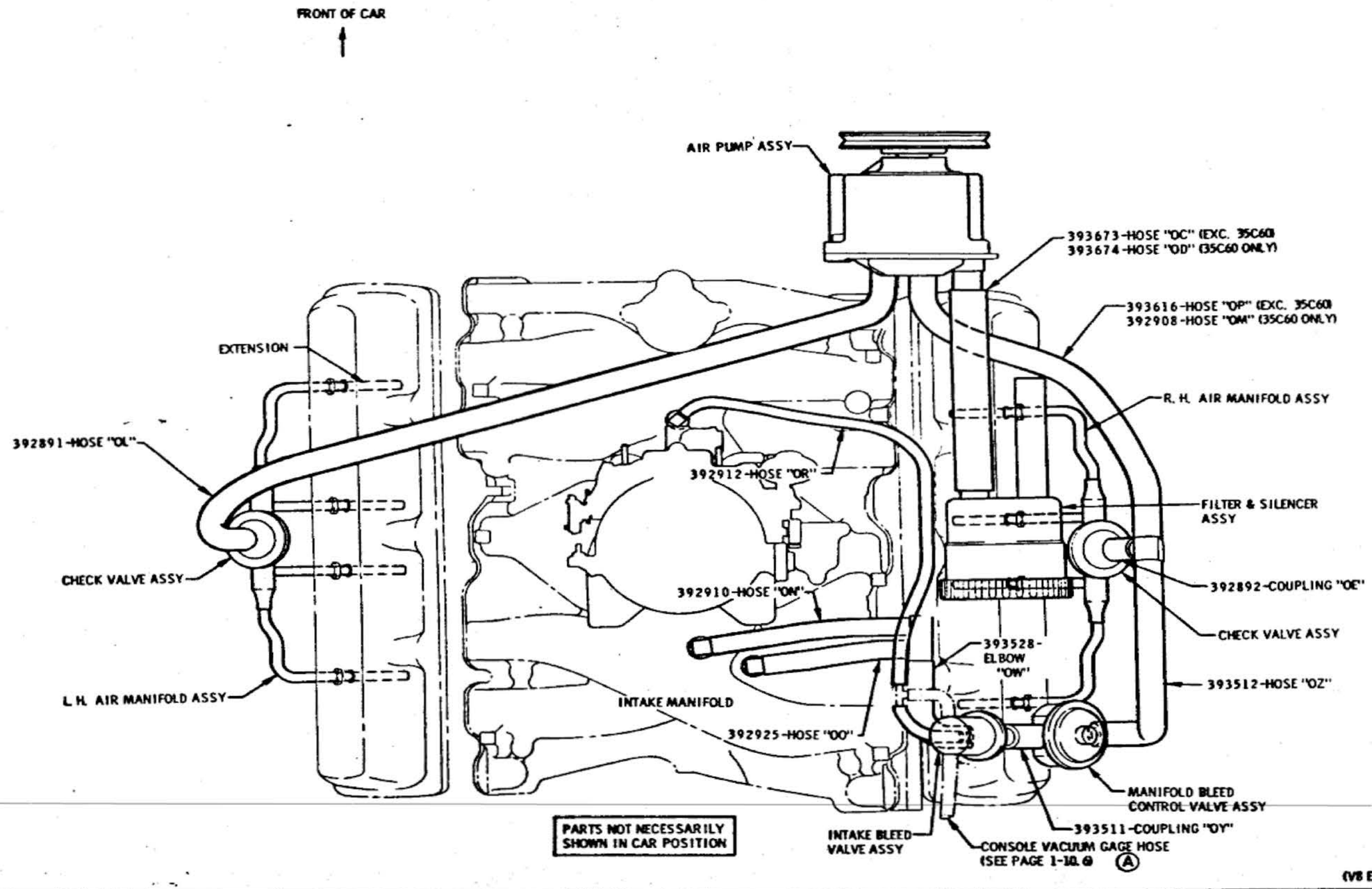

(V8 EXC. 35L77, L78)

DATE	SYM	REVISION	DR.	CK.	DATE	SYM	REVISION	DR.	CK.	DATE	SYM	REVISION	DR.	CK.
										10-26-65	A	NOTE ADDED	BP	DJ

CHART AIR INJECTION REACTOR SYSTEM DIAGRAM

DATE SEPTEMBER 1, 1965
DR. BY P. J. McKESSY
CHECKED
APPR.
APPR.

FIRST USED 1966

ILLUSTRATION

SERIES A

REF.

PAGE 6-1.17

PART NO. 589998

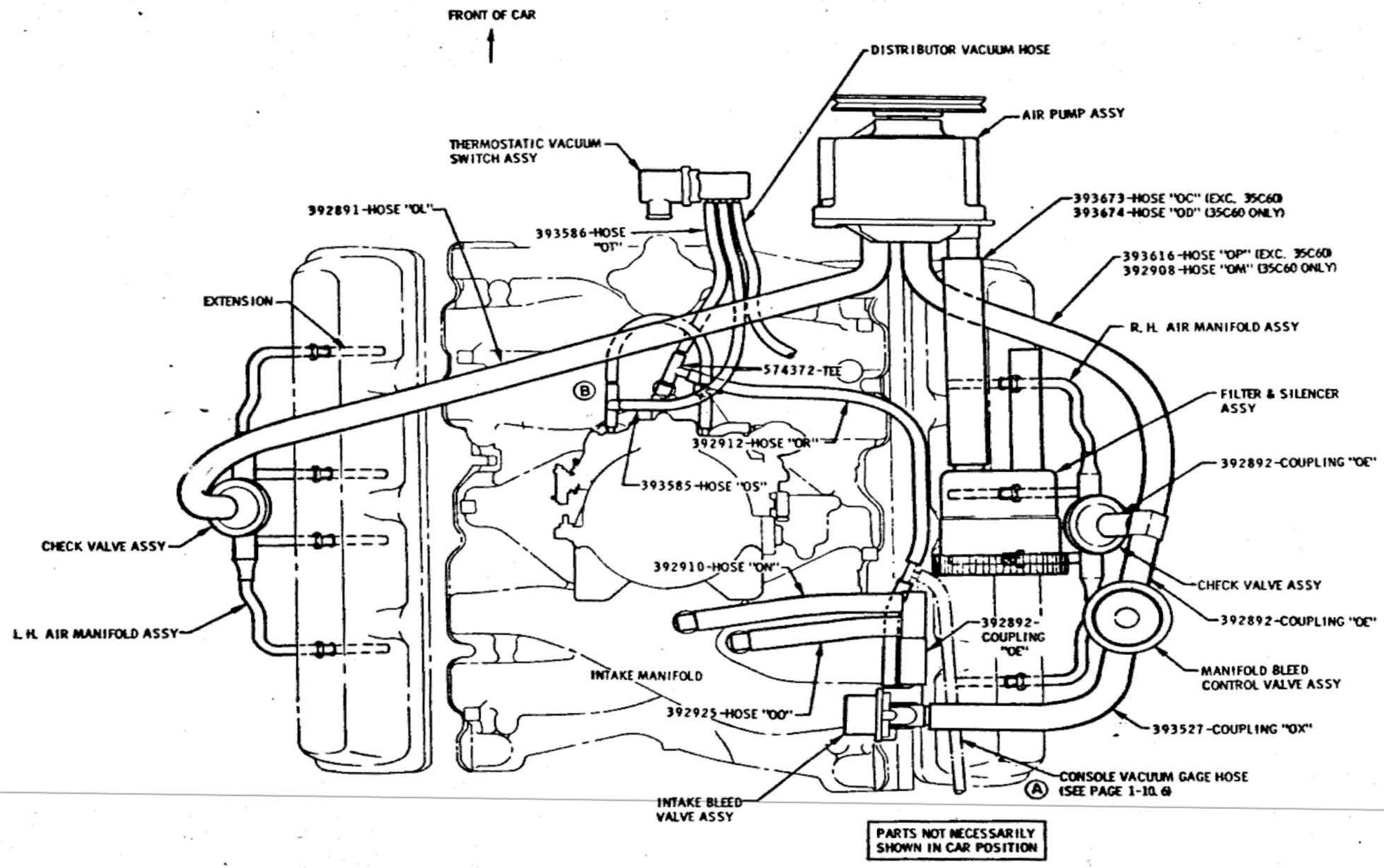

CSL77, L78

DATE	SYM	REVISION	DR.	CK.	DATE	SYM	REVISION	DR.	CK.	DATE	SYM	REVISION	DR.	CK.
										2-1-66	B	HOSE ROUTING REVISED		
										10-26-65	A	NOTE ADDED		

CHART AIR INJECTION REACTOR SYSTEM DIAGRAM

DATE SEPTEMBER 1, 1965
DR. BY P. J. McKESSY
CHECKED
APPR. Hall
APPR.

FIRST USED 1966

Oldsmobile GRAPHIC ILLUSTRATION

SERIES A

REF.

PAGE 6-1.17A

PART NO. 589998

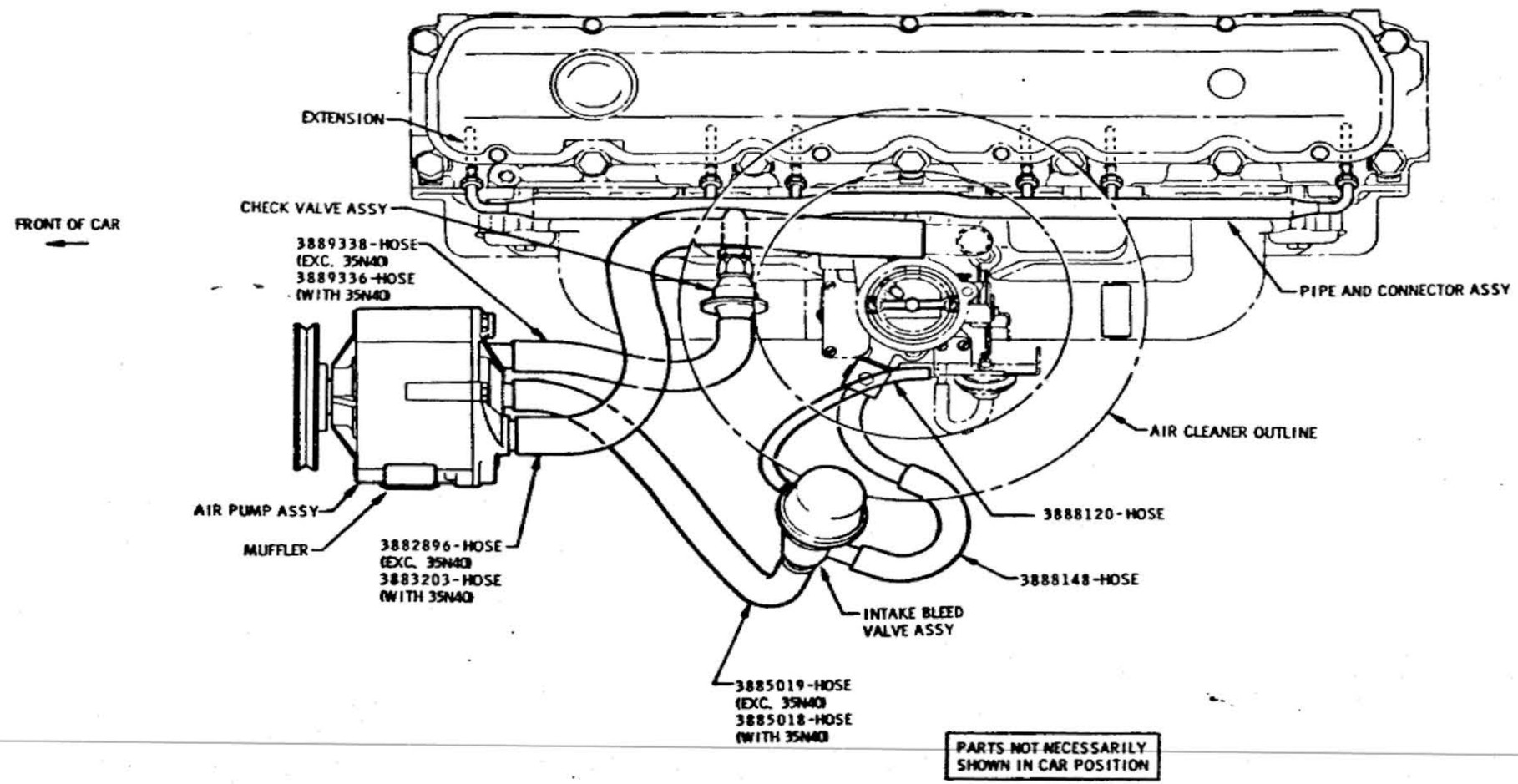

DATE	SYM	REVISION	DR.	CK.	DATE	SYM	REVISION	DR.	CK.	DATE	SYM	REVISION	DR.	CK.

CHART AIR INJECTION REACTOR SYSTEM DIAGRAM

DATE SEPTEMBER 1, 1965
DR. BY P. J. McKESSY
CHECKED
APPR.
APPR.

FIRST USED 1966

Oldsmobile Service ILLUSTRATION

SERIES A

REF.

PAGE 6-1.17B

PART NO. 589998

654 ENGINE (330 CU. IN.)

ALL 654 ENGINES WILL BE NUMBERED CONSECUTIVELY FROM ONE BLOCK OF SIX DIGIT NUMBERS, STARTING WITH 001001 AND PREFIXED AND SUFFIXED AS FOLLOWS:

ADD PREFIX "W" FOR ALL ENGINES FOR "A" BODY
PREFIX "X" FOR ALL ENGINES FOR "B" BODY

ADD SUFFIX "G" FOR ALL 4 BBL HIGH COMPRESSION
SUFFIX "E" FOR ALL 2 BBL LOW COMPRESSION EXPORT OPTION
SUFFIX "H" FOR ALL 4 BBL LOW COMPRESSION EXPORT OPTION
SUFFIX "L" FOR ALL LOW COMPRESSION 4 BBL ENGINES FOR "A" BODY
2 BBL ENGINES FOR "B" BODY

EXAMPLES:	W001001	"A" BODY - 2 BBL CARB - STD. COMPRESSION
	X001001	"B" BODY - 2 BBL CARB - STD. COMPRESSION
	W001001G	"A" BODY - 4 BBL CARB - HIGH COMPRESSION
	X001001E	"B" BODY - 2 BBL CARB - LOW COMPRESSION EXPORT OPTION
	W001001H	"A" BODY - 4 BBL CARB - LOW COMPRESSION EXPORT OPTION
	W001001L	"A" BODY - 4 BBL CARB - LOW COMPRESSION
	X001001L	"B" BODY - 2 BBL CARB - LOW COMPRESSION

658 ENGINE (400 CU. IN.)

ALL 658 ENGINES WILL BE NUMBERED CONSECUTIVELY FROM ONE BLOCK OF SIX DIGIT NUMBERS STARTING WITH 100001 AND PREFIXED AND SUFFIXED AS FOLLOWS:

ADD PREFIX "V" FOR ALL 658 ENGINES
ADD SUFFIX "T" FOR ALL 3 - 2 BBL ENGINES

EXAMPLES:	V100001 - 4 BBL CARB.
	V100002T - 3 - 2 BBL CARB.

657 & 664 ENGINES (425 CU. IN.)

ALL 657 AND 664 ENGINES WILL BE NUMBERED CONSECUTIVELY FROM ONE BLOCK OF SIX DIGIT NUMBERS STARTING WITH 500001 AND PREFIXED AND SUFFIXED AS FOLLOWS:

ADD PREFIX "M" FOR ALL 2 BBL CARB
PREFIX "N" FOR ALL 4 BBL CARB

ADD SUFFIX "T" FOR ALL 664 ENGINES
SUFFIX "E" FOR 2 OR 4 BBL CARB EXPORT LOW COMPRESSION OPTIONS
SUFFIX "L" FOR 2 BBL CARB LOW COMPRESSION
SUFFIX "S" FOR 4 BBL CARB "STARFIRE"

EXAMPLES:	M500001	657 - 2 BBL CARB - STD. COMPRESSION
	N500002	657 - 4 BBL CARB - STD. COMPRESSION
	N500003T	664 ENGINE
	M500004E	657 - 2 BBL CARB - EXPORT LOW COMPRESSION
	N500005E	657 - 4 BBL CARB - EXPORT LOW COMPRESSION
	M500006L	657 - 2 BBL CARB - LOW COMPRESSION
	N500007S	657 - 4 BBL CARB - "STARFIRE"

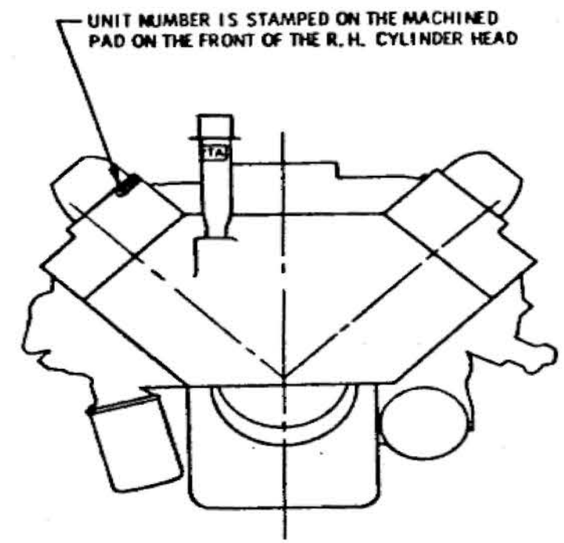

DATE	SYM	REVISION	DR.	CK.	DATE	SYM	REVISION	DR.	CK.	DATE	SYM	REVISION	DR.	CK.

CHART - ENGINE UNIT NUMBER

DATE DEC. 18, 1965
DR. BY JEFF JOHNSON
CHECKED J. N. FAMES
APPR.
APPR.

FIRST USED 1966
Oldsmobile Service Illustration
SERIES A-B-C-E
REF.
PAGE 6-1.18
PART NO. 395619

OLDSMOBILE DIVISION GENERAL MOTORS CORPORATION LANSING — MICHIGAN

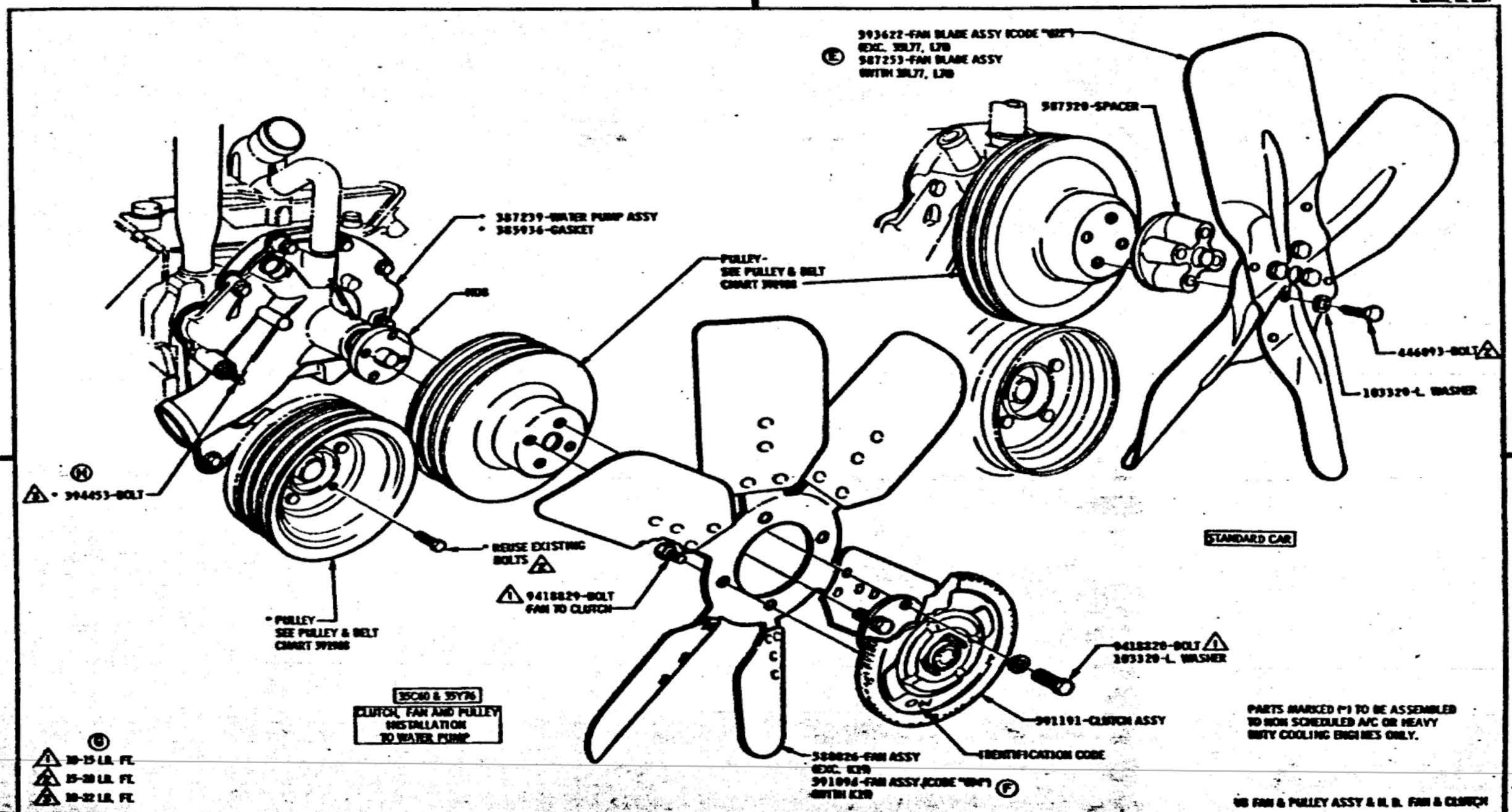

											9-8-65	E	PART NO. ADDED		INSTALLATION	ENGINE DRESS	
											7-30-65	D	TORQUE SPEC. ADDED				
				10-8-65	H	WAS 389457-BOLT					7-7-65	C	591094 ADDED		1966		6-2.1
				9-30-65	G	TORQUE SPECS. REVISED					6-18-65	B	WAS 394089				
				9-30-65	F	IDENTIFICATION ADDED					5-19-65	A	REVISED & REORGANIZED		A		589998

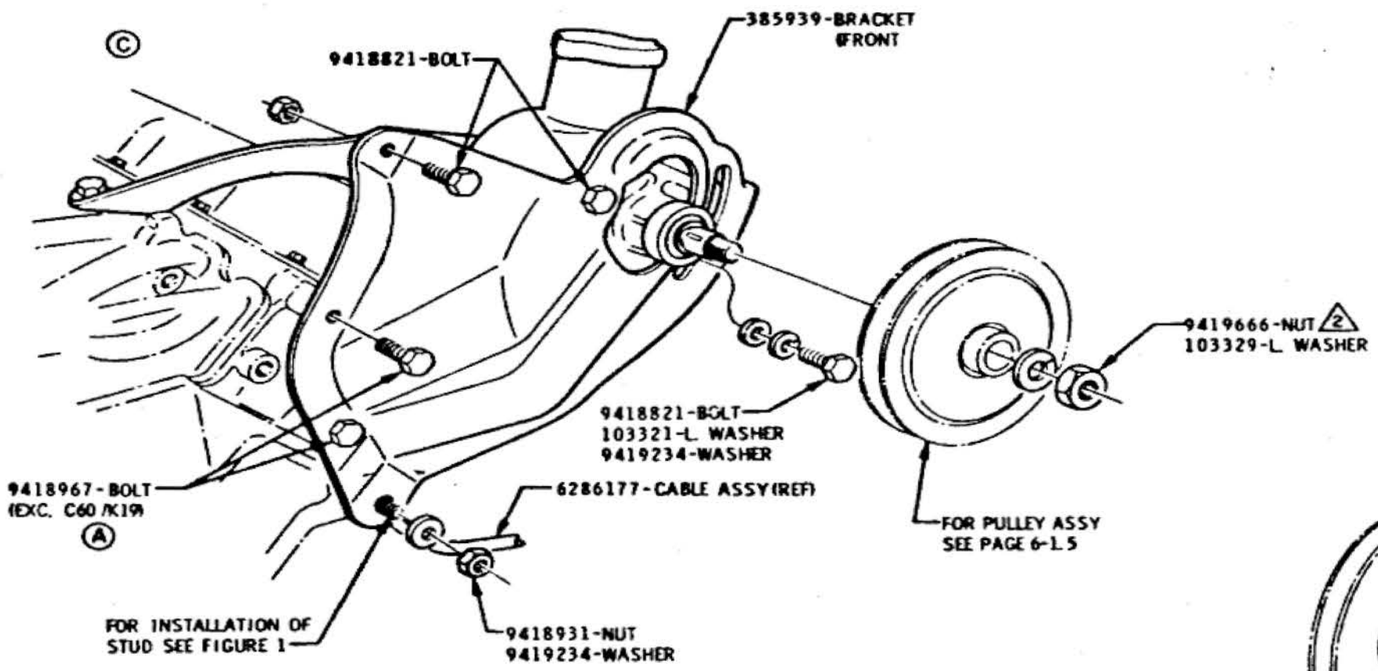

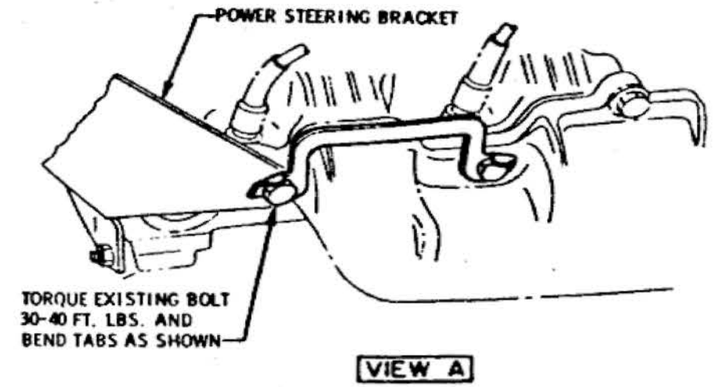

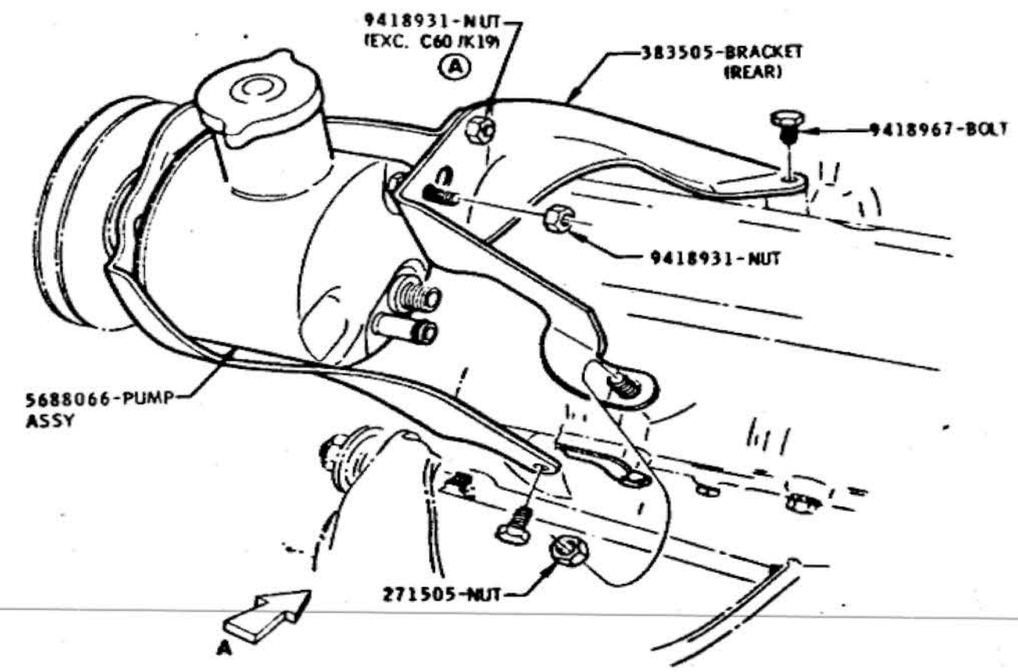

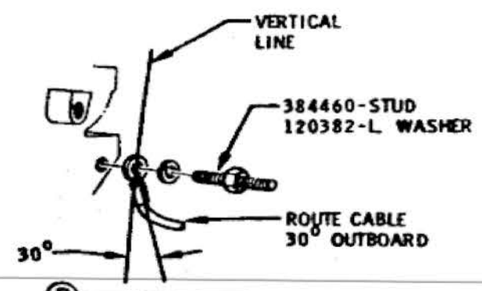

BATTERY CABLE INSTALLATION

FIGURE 1

1 30-40 LB. FT.
2 40-60 LB. FT.

ALL FASTENINGS 1 UNLESS NOTED

FOR POWER STEERING INSTALLATION AND FILL PROCEDURE SEE PAGE 9-1.2

V8 POWER STEERING PUMP, BRACKETS & BATTERY CABLE

DATE	SYM	REVISION	DR.	CK.	DATE	SYM	REVISION	DR.	CK.	DATE	SYM	REVISION	DR.	CK.
										2-22-66	C	PART NUMBERS REMOVED		
										5-24-65	B	VIEW ADDED		
										4-22-65	A_2	C61 REMOVED		

INSTALLATION ENGINE DRESS

DATE MARCH 19, 1965 — FIRST USED 1966 — Oldsmobile Graphic Illustration — PAGE 6-2.2

DR. BY MODERN — CHECKED — APPR. — APPR. — SERIES A — REF. — PART NO. 589998

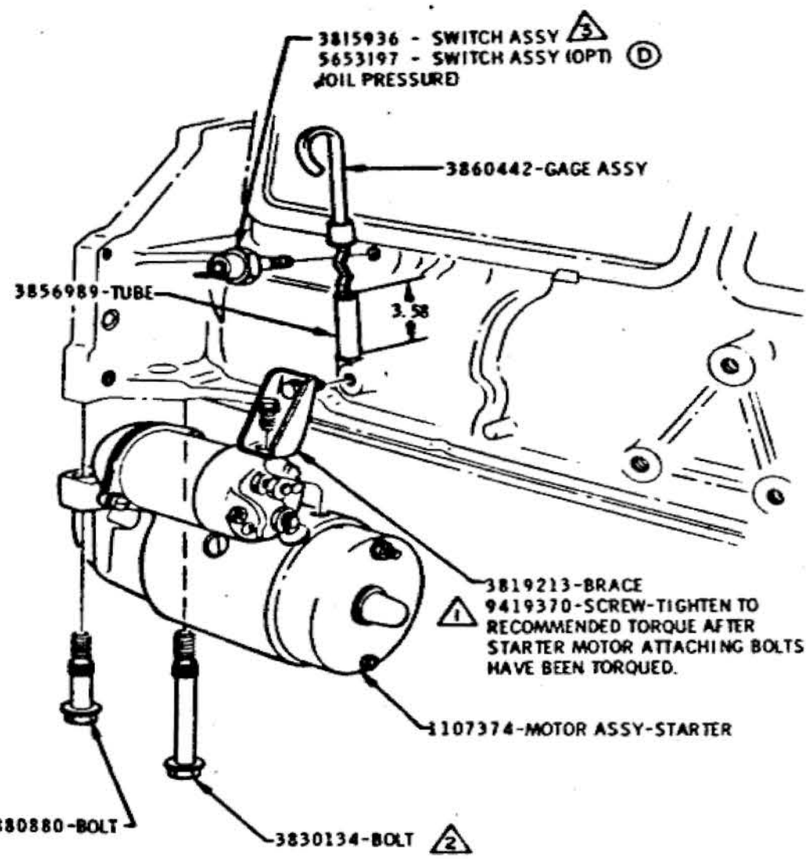

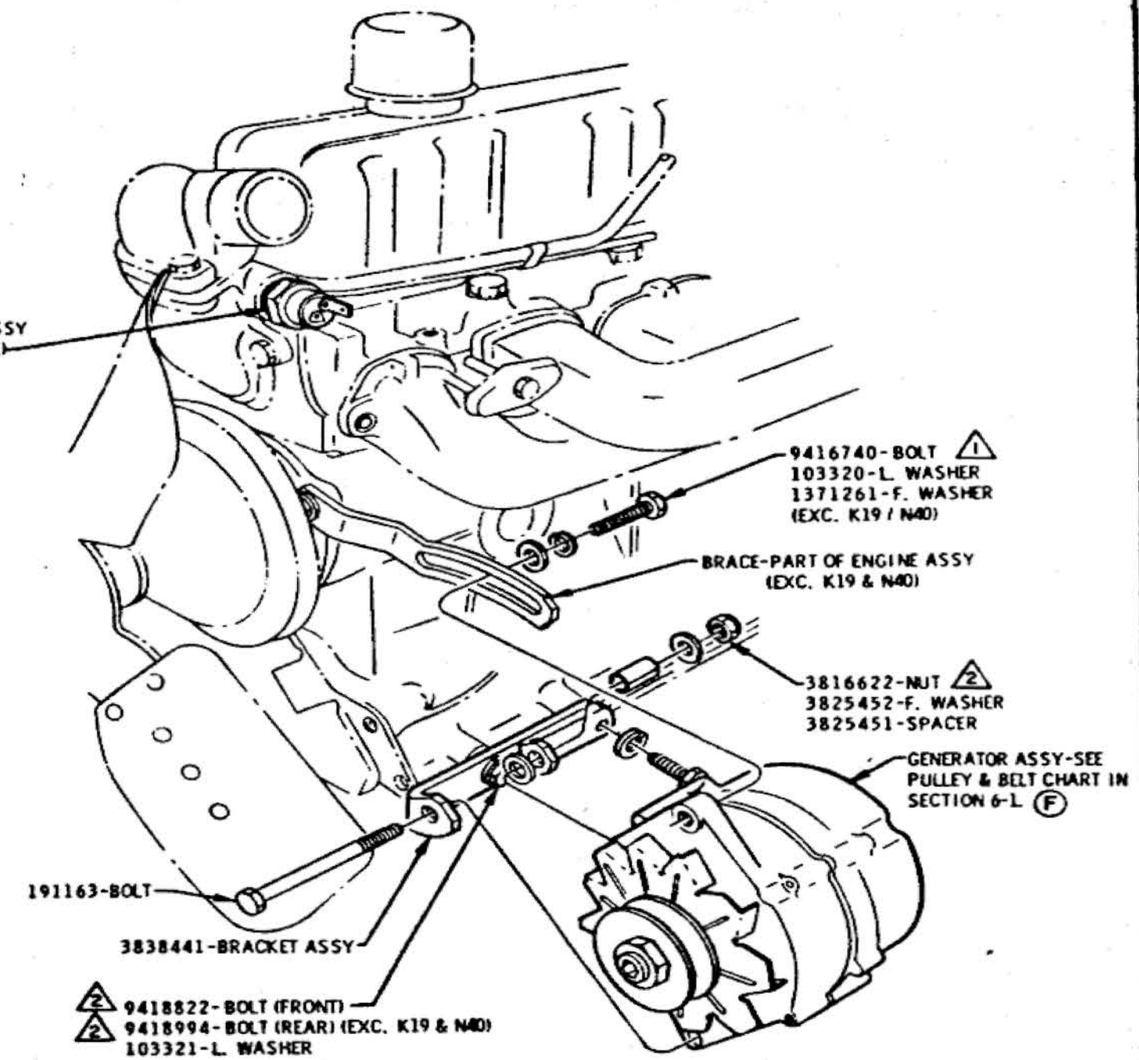

TYPICAL GENERATOR INSTALLATION

(1) 20-25 LB. FT.
(2) 25-35 LB. FT.
(3) 100-125 LB. IN.
(4) 14-20 LB. FT. (E)

(L6-OIL SENDING UNIT, DIP STICK, TUBE, STARTER, & GENERATOR)

DATE	SYM	REVISION	DR.	CK.	DATE	SYM	REVISION	DR.	CK.	DATE	SYM	REVISION	DR.	CK.
										8-3-65	E	TORQUES ADDED		
										8-3-65	D	WAS 3653197		
										6-17-65	C	F. WASHER ADDED		
										6-4-65	B	3880880 WAS 3849418		
					11-12-65	F	NOTE REVISED			5-11-65	A	NOTE REVISED		

INSTALLATION **ENGINE DRESS**
DATE APRIL 1, 1965
DR. BY W. E. MASON
CHECKED
APPR.
APPR.

FIRST USED 1966 — Oldsmobile GRAPHIC ILLUSTRATION — SERIES A — REV. — PAGE 6-2.3 — PART NO. 589998

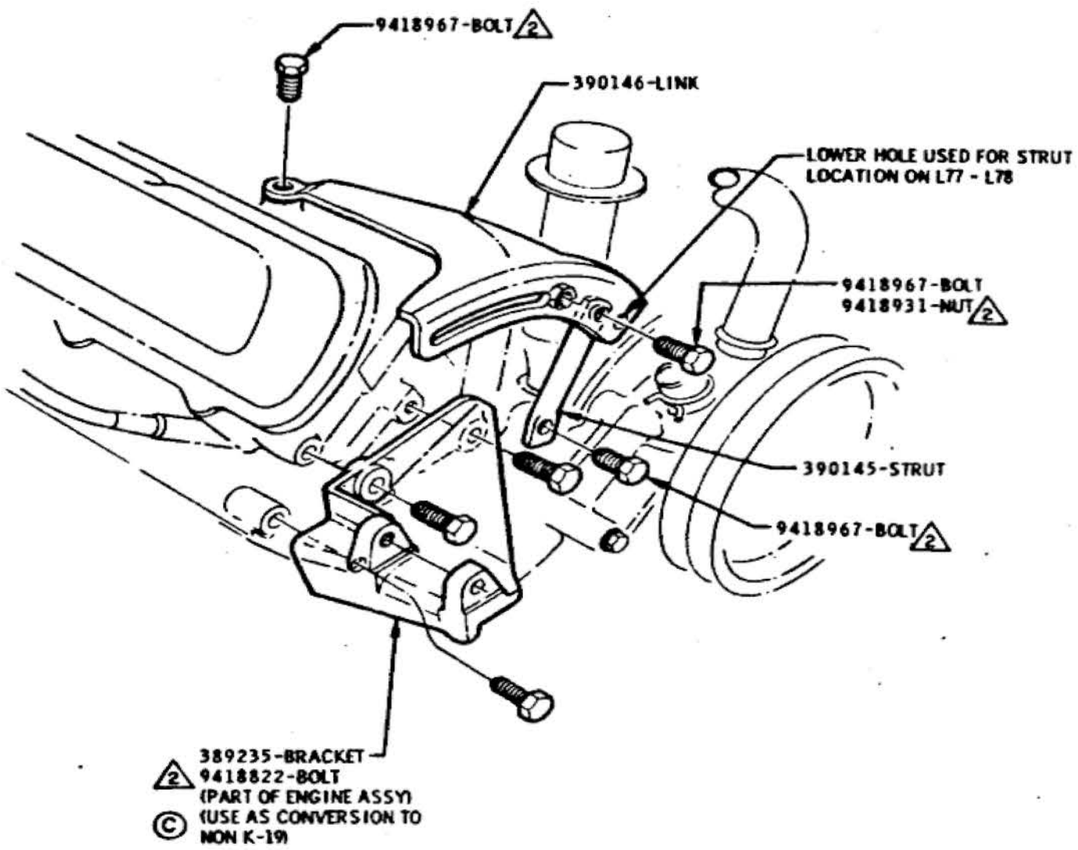

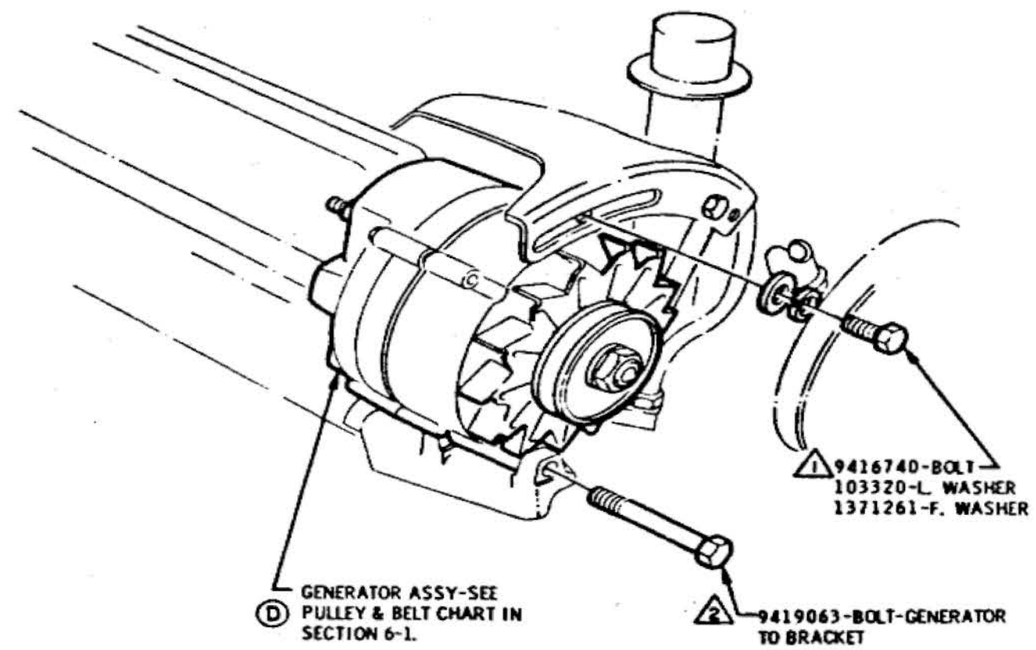

(1) 20-25 LB. FT.
(2) 25-35 LB. FT. (A)

V8 GENERATOR ASSY

DATE	SYM	REVISION	DR.	CK.	DATE	SYM	REVISION	DR.	CK.	DATE	SYM	REVISION	DR.	CK.
										11-18-65	D	NOTE REVISED		
										9-2-65	C	NOTE REVISED		
										8-12-65	B	BACKGROUND REVISED		
										7-26-65	A	TORQUE SPECS. ADDED		

INSTALLATION ENGINE DRESS

DATE MARCH 23, 1965
DR. BY MODERN
CHECKED
APPR.
APPR.

FIRST USED 1966
SERIES A
Oldsmobile Service ILLUSTRATION
REF.
PAGE 6-2.4
PART NO. 589998

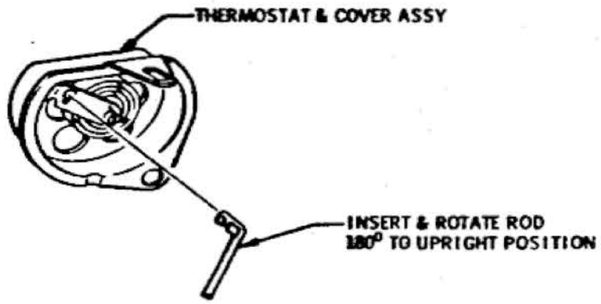

FIGURE 1

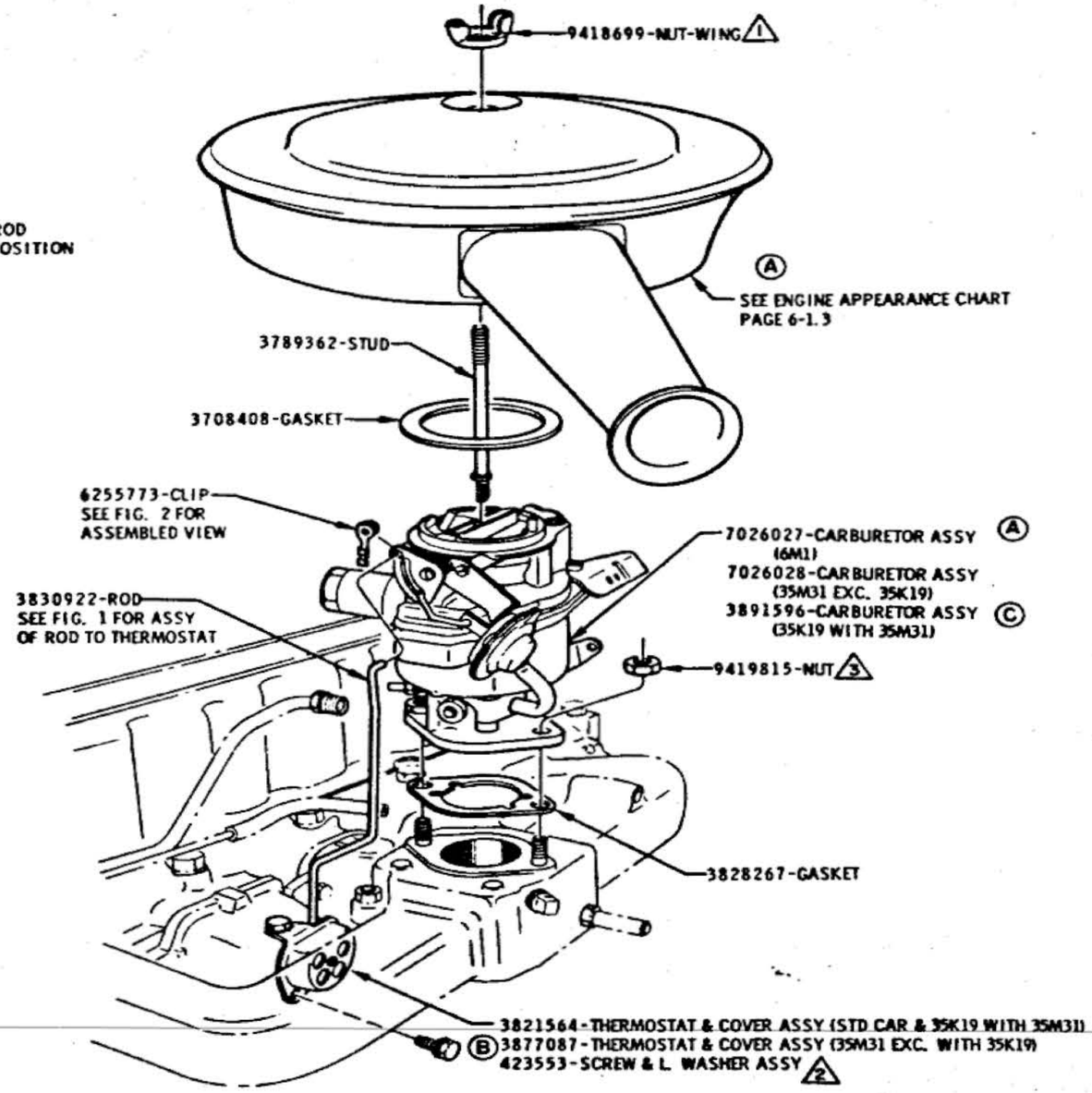

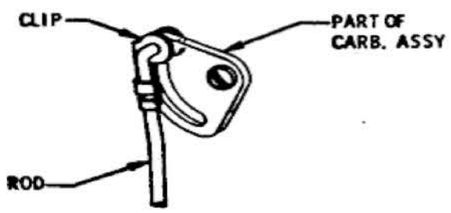

FIGURE 2

1 15-20 LB. IN.
2 35-50 LB. IN.
3 14-18 LB. FT.

L-6 CARBURETOR & AIR CLEANER

DATE	SYM	REVISION	DR.	CK.	DATE	SYM	REVISION	DR.	CK.	DATE	SYM	REVISION	DR.	CK.
										12-3-65	C	WAS 3880860		
										7-20-65	B	3877087 ADDED		
										5-26-65	A	NOTES REVISED		

INSTALLATION ENGINE DRESS

DATE MARCH 23, 1965
DR. BY W.E. MASON
CHECKED
APPR.
APPR.

FIRST USED 1966
SERIES A
REF.
PAGE 6-2.5
PART NO. 589998

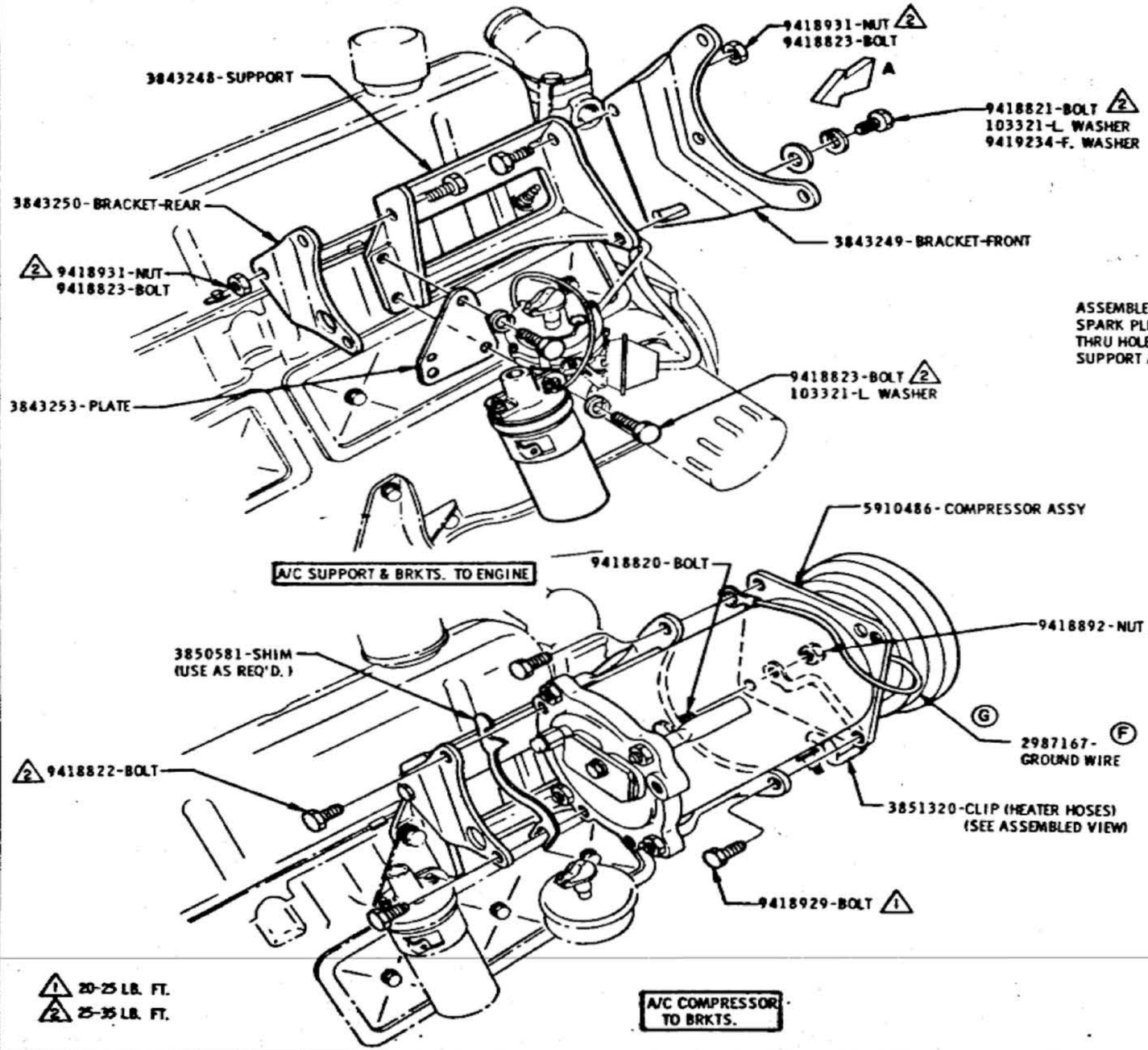

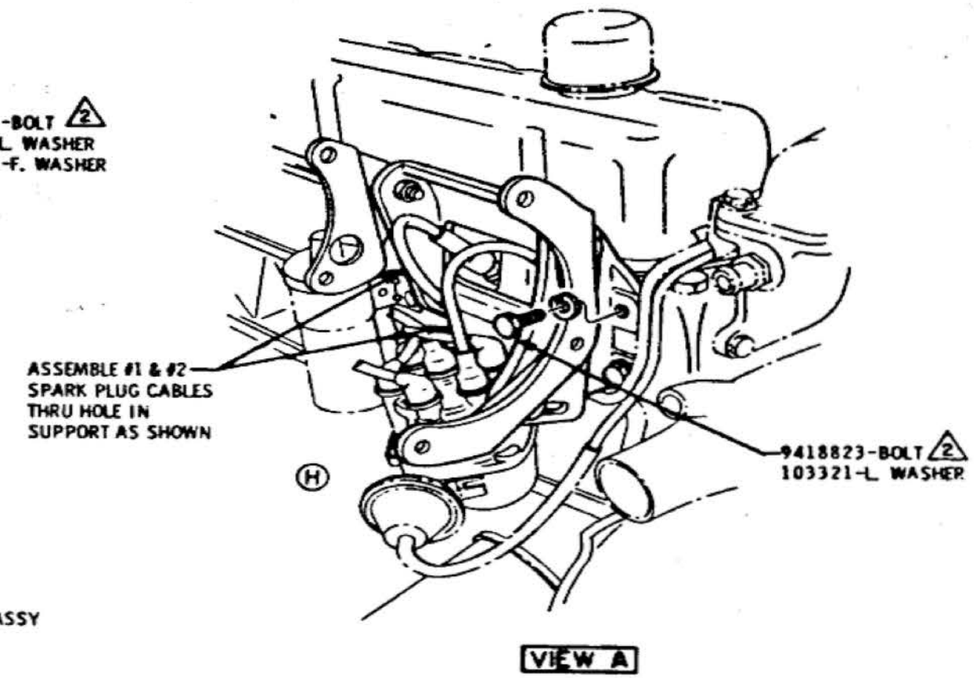

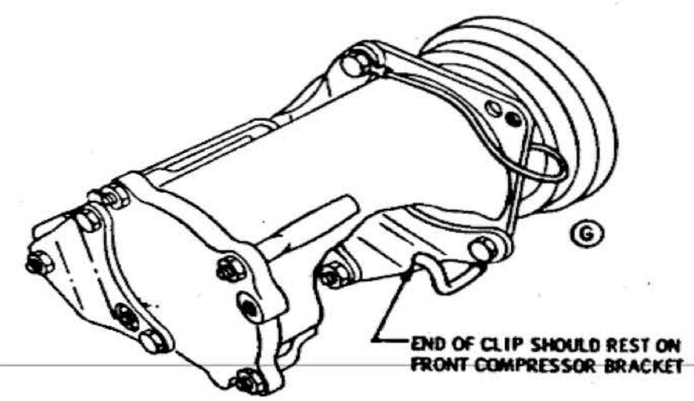

ASSEMBLED VIEW
OF COMPRESSOR & BRKTS.

L-6 A/C COMPRESSOR & BRACKETS

DATE	SYM	REVISION	DR.	CK.	DATE	SYM	REVISION	DR.	CK.	DATE	SYM	REVISION	DR.	CK.
										6-22-65	E	3843253 WAS 392219		
										6-22-65	D	3843250 WAS 392217		
					8-27-65	H	BACKGROUND REVISED			6-22-65	C	3843249 WAS 392216		
					8-10-65	G	GROUND WIRE REROUTED			6-22-65	B	3843248 WAS 392218		
					7-30-65	F	PART NO. ADDED			5-6-65	A	CABLE ASSY ENDS REVISED		

INSTALLATION **ENGINE DRESS**

DATE MARCH 27, 1965
DR. BY W.E. MASON
CHECKED
APPR.
APPR.

FIRST USED 1966 — Oldsmobile Graphic Illustration — SERIES A — REV. — PAGE 6-2.6 — PART NO. 589998

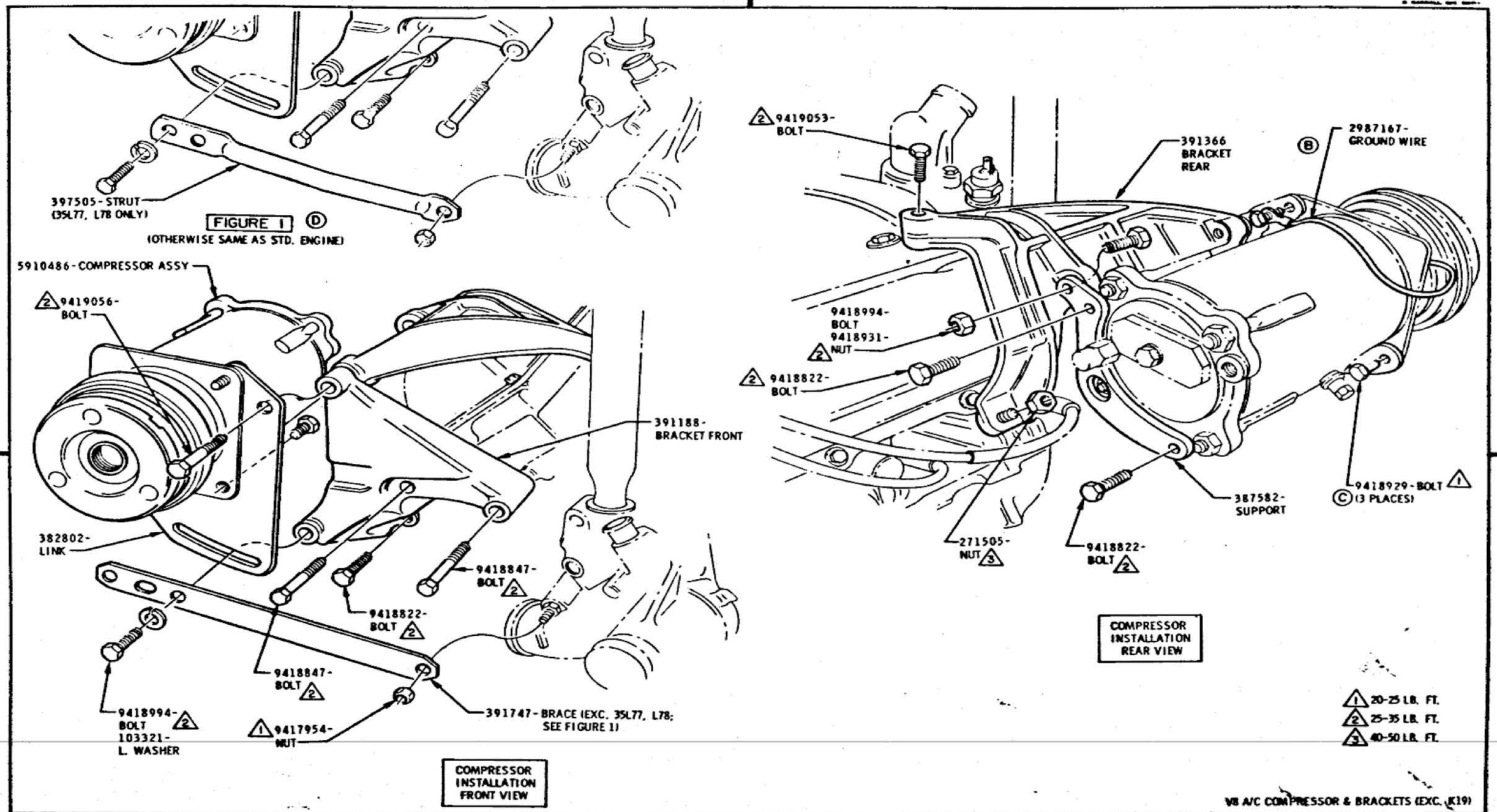

V8 A/C COMPRESSOR & BRACKETS (EXC. K19)

DATE	SYM	REVISION	DR.	CK.	DATE	SYM	REVISION	DR.	CK.	DATE	SYM	REVISION	DR.	CK.
										5-27-66	D	FIGURE 1 ADDED		
										1-28-66	C	NOTE REVISED		
										8-10-65	B	GROUND WIRE REROUTED		
										7-28-65	A	GROUND WIRE ADDED		

INSTALLATION **ENGINE DRESS**

DATE MARCH 27, 1965 — DR. BY BEAUDOIN — CHECKED — APPR. — APPR.

FIRST USED 1966 — Oldsmobile Service ILLUSTRATION — SERIES A — REF. 95-C 60

PAGE 6-2.7

PART NO. 589998

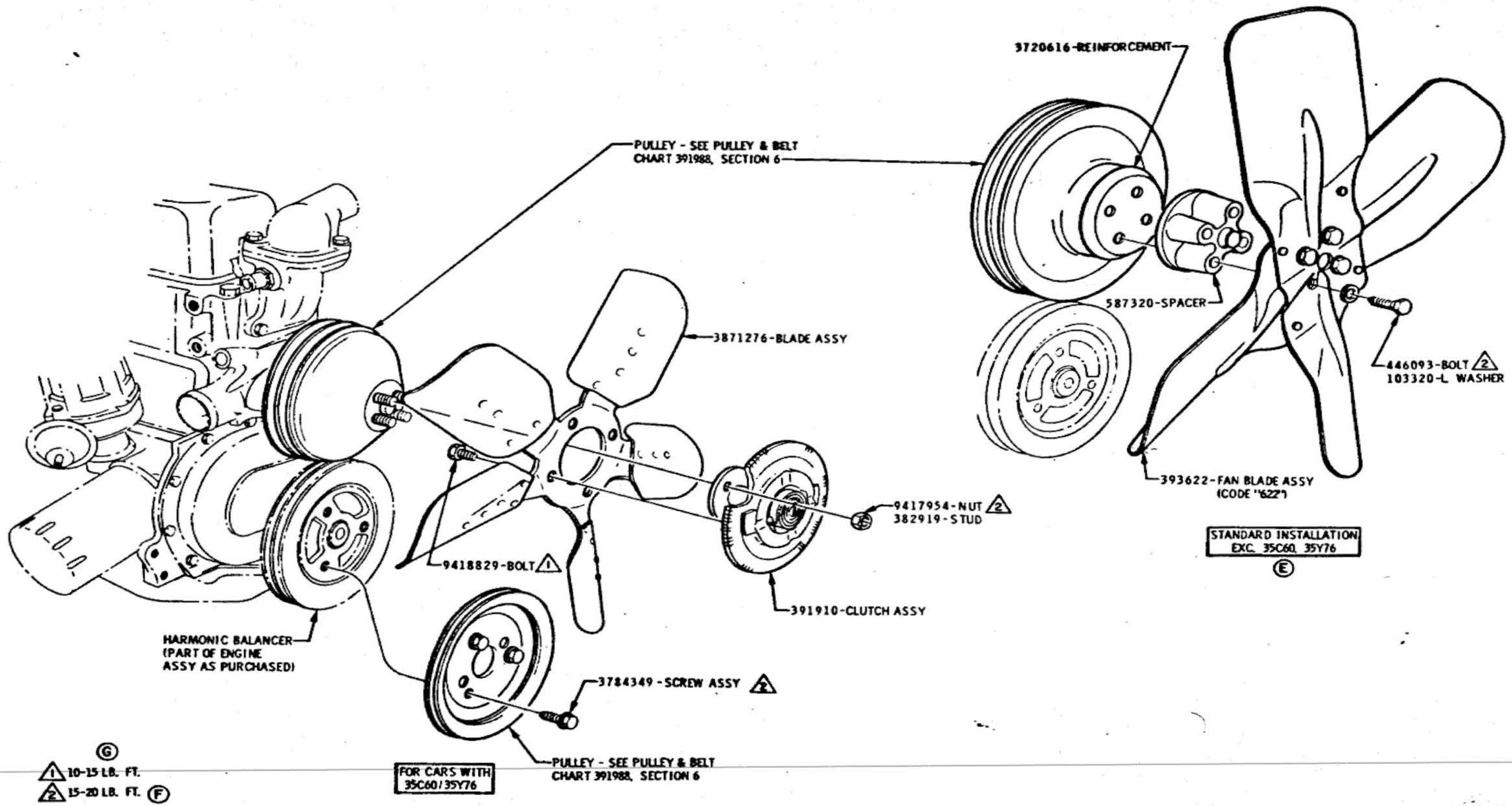

L6 FAN & PULLEY & H. D. FAN & CLUTCH

DATE	SYM	REVISION	DR.	CK.	DATE	SYM	REVISION	DR.	CK.	DATE	SYM	REVISION	DR.	CK.
										8-12-65	E	VIEW ADDED		
										7-28-65	D	WAS 9418820-BOLT		
										7-28-65	C	103320-CANCELLED		
					8-30-65	G	TORQUE SPECS REVISED			5-11-65	B	NOTES REVISED		
					8-12-65	F	TORQUES REVISED			5-11-65	A	WAS 3764349-SCREW ASSY		

INSTALLATION **ENGINE DRESS**

DATE MARCH 29, 1965
DR. BY W. E. MASON
CHECKED
APPR.
APPR.

FIRST USED 1966
SERIES A
ILLUSTRATION
REV.
PAGE 6-2.8
PART NO. 589998

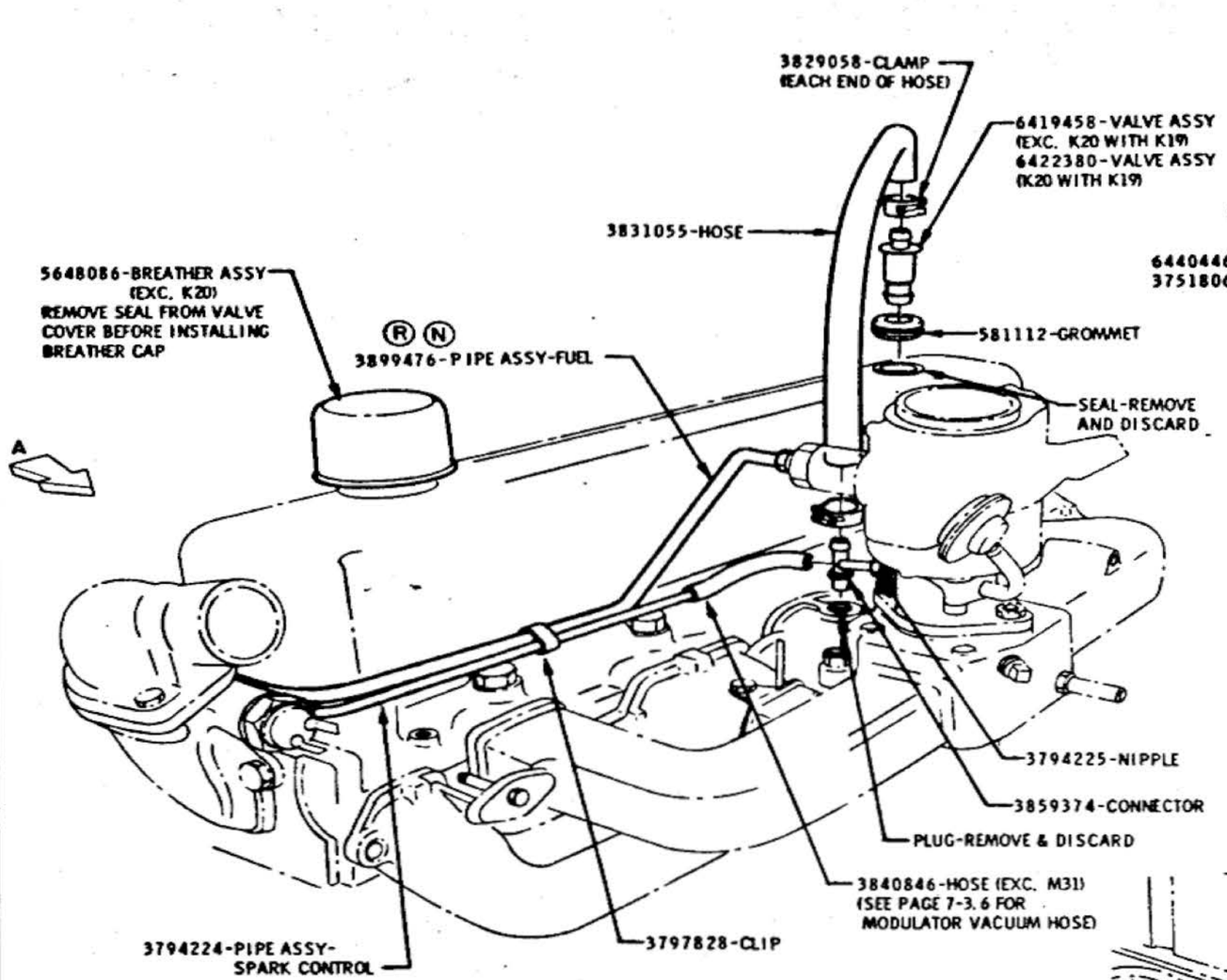

FUEL & VACUUM LINES AND CRANKCASE VENTILATION

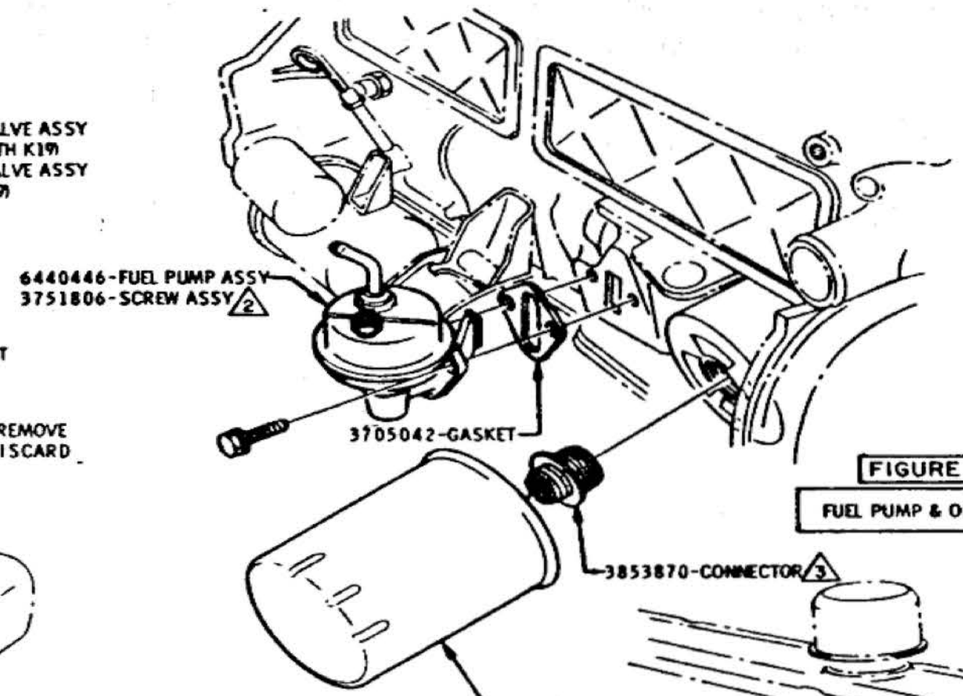

FIGURE 1

FUEL PUMP & OIL FILTER

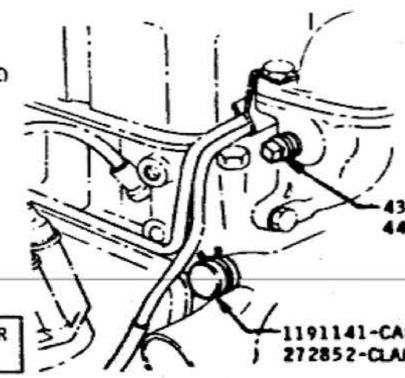

THIS VIEW FOR 350 ONLY

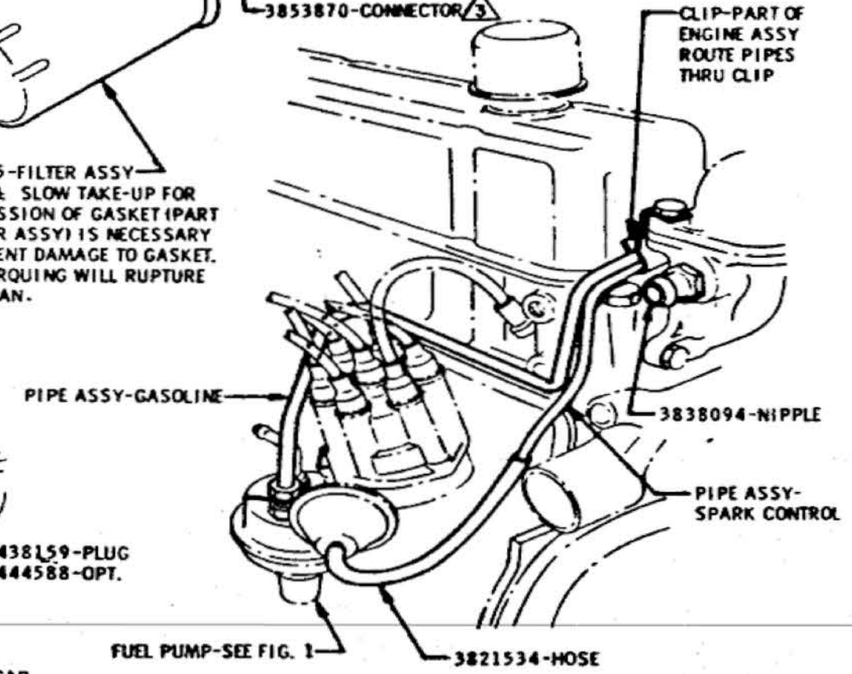

VIEW A

L6- FUEL AND VACUUM LINES, CRANKCASE VENT., FUEL PUMP & OIL FILTER

1 15-20 LB. FT.
2 20-25 LB. FT.
3 30-40 LB. FT.

Ⓟ ENGINE CRANKCASE OIL
FILL OIL PAN WITH 5 QTS THRU OIL FILLER HOLE IN VALVE ROCKER COVER.
OLDS FINAL ASSY TO USE REGULAR V8 G.M. 4745M (S.A.E. 20W OR S.A.E. 5W-20)
G.M.A.D. MAY USE GM-4745M OR CHEVROLET 9985002 (S.A.E. 10W-30)

DATE	SYM	REVISION	DR.	CK.	DATE	SYM	REVISION	DR.	CK.	DATE	SYM	REVISION	DR.	CK.
6-4-66	R	WAS 3895013			8-19-65	K	VIEW "A" REV. TO DETAIL			7-16-65	E	6422379-VALVE ASSY ADDED		
3-14-66	P	NOTE ADDED			8-19-65	J	WAS 5656790-PUMP ASSY			7-16-65	D	USAGE REVISED		
1-6-66	N	WAS 3880811			8-19-65	H	WAS 3794628-PIPE ASSY			6-23-65	C	NOTE ADDED		
9-20-65	M	WAS 3719206			8-13-65	G	WAS 6422379			6-21-65	B	382093-CONN. ADDED		
8-27-65	L	WAS 6422379			7-26-65	F	TORQUE ADDED			5-17-65	A	VIEW ADDED		

INSTALLATION **ENGINE DRESS**

DATE MARCH 30, 1965
DR. BY W.E. MASON
CHECKED
APPR.
APPR.

FIRST USED 1966

SERIES A

REV.

PAGE 6-2.9

PART NO. 589998

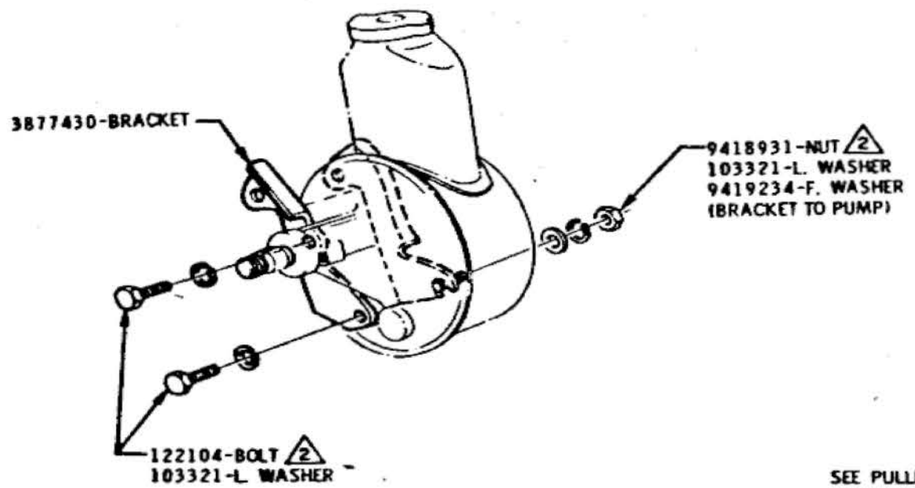

BRACKET TO PUMP

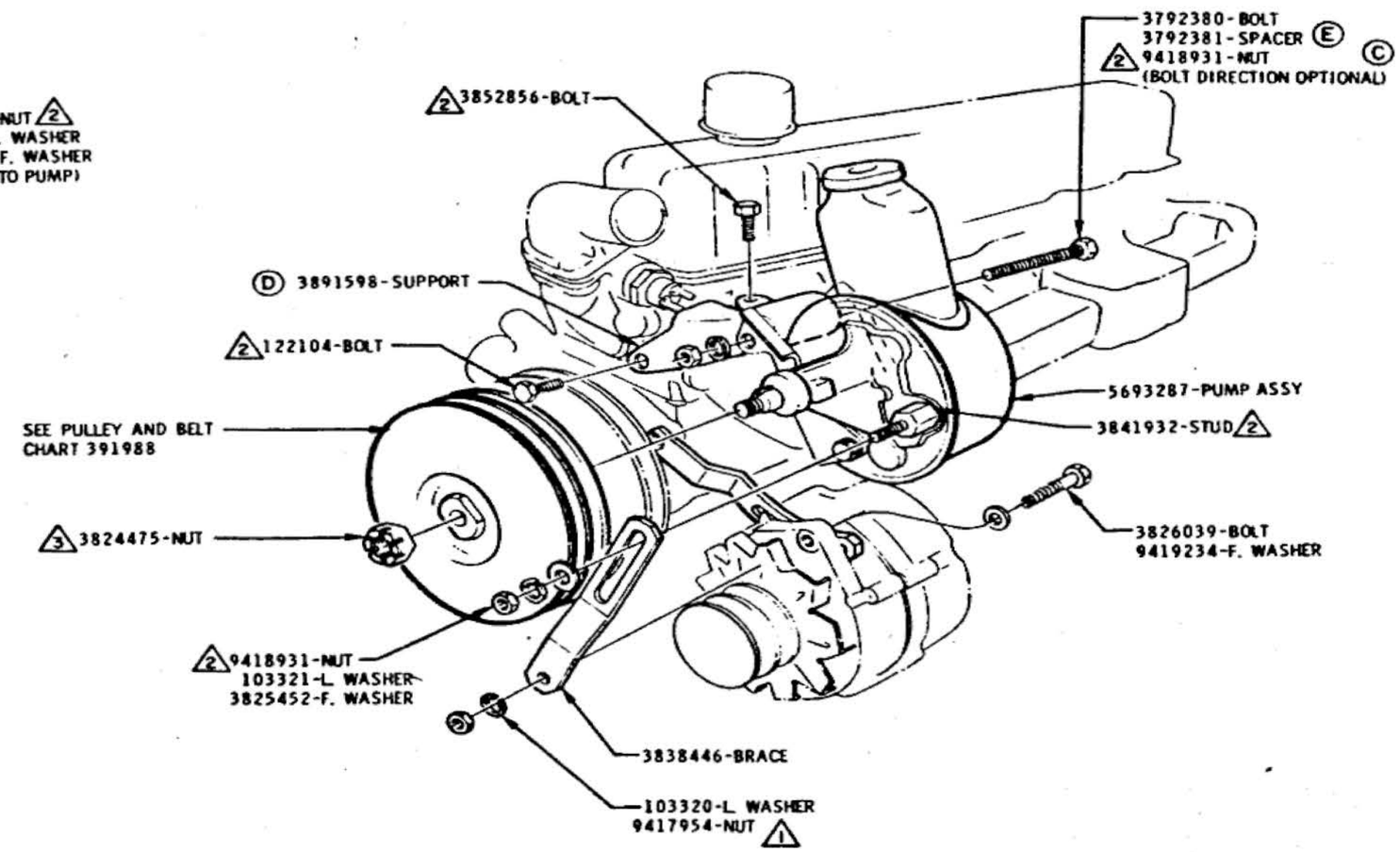

(1) 20-25 LB. FT.
(2) 25-35 LB. FT.
(3) 55-70 LB. FT.

EXC. 35K19

L-6 POWER STEERING PUMP & BRACKET

DATE	SYM	REVISION	DR.	CK.	DATE	SYM	REVISION	DR.	CK.	DATE	SYM	REVISION	DR.	CK.
										1-19-66	E	REVISED TO DETAIL		
										11-8-65	D	WAS 3826037-SUPPORT		
										11-3-65	C	BOLT DIRECTION ADDED		
										5-11-65	B	NOTE REMOVED		
										4-26-65	A	DWG TITLE WAS "STEERING"		

INSTALLATION — ENGINE DRESS

DATE MARCH 30, 1965
DR. BY ED ROE
CHECKED
APPR.

FIRST USED 1966 — Oldsmobile Service ILLUSTRATION

SERIES A — REF.

PAGE 6-2.10

PART NO. 589998

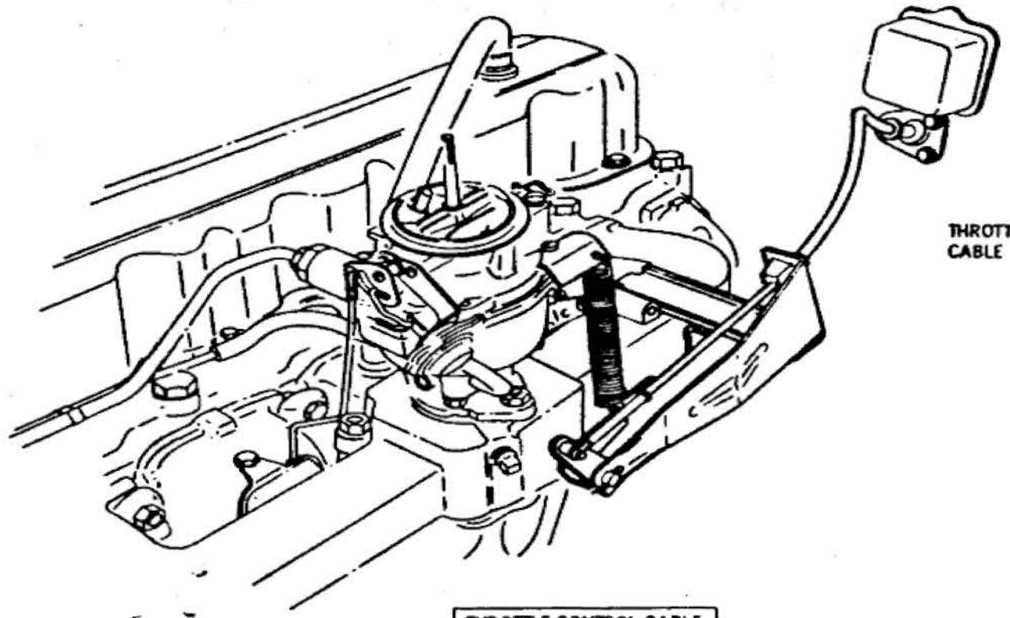

THROTTLE CONTROL CABLE ROUTING

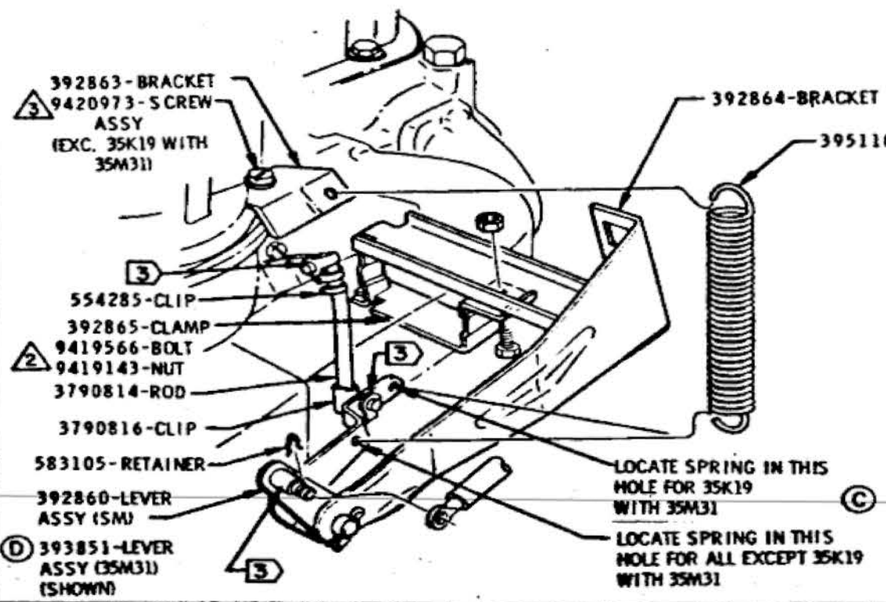

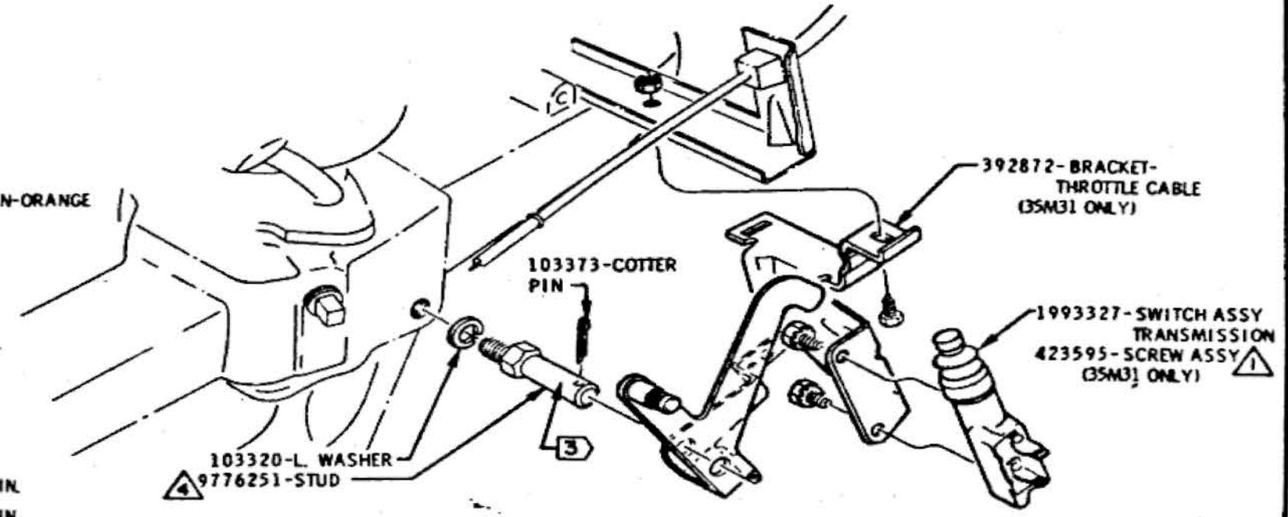

1. 12 - 18 LB. IN.
2. 48 - 84 LB. IN.
3. 50 - 60 LB. IN.
4. 168 - 204 LB. IN.

LUBRICATE AREAS INDICATED WITH 9985002 OIL

L6 THROTTLE CONTROL

DATE	SYM	REVISION	DR.	CK.	DATE	SYM	REVISION	DR.	CK.	DATE	SYM	REVISION	DR.	CK.
										11-22-65	E	WAS 3791577-SPRING		
										7-7-65	D	WAS 392870-LEVER ASSY		
										7-7-65	C	K 19 SPRING LOC ADDED		
										6-16-65	B	537519-WASHER REMOVED		
										6-16-65	A2	REVISED TO DETAIL		

INSTALLATION **ENGINE DRESS**

DATE APRIL 12, 1965
DR. BY R. GOODWIN-R.S.MKD.
CHECKED
APPR. H. PAGE

FIRST USED 1966

Oldsmobile Service ILLUSTRATION

SERIES A

REV. TR-5912

PAGE 6-2.12

PART NO. 589998

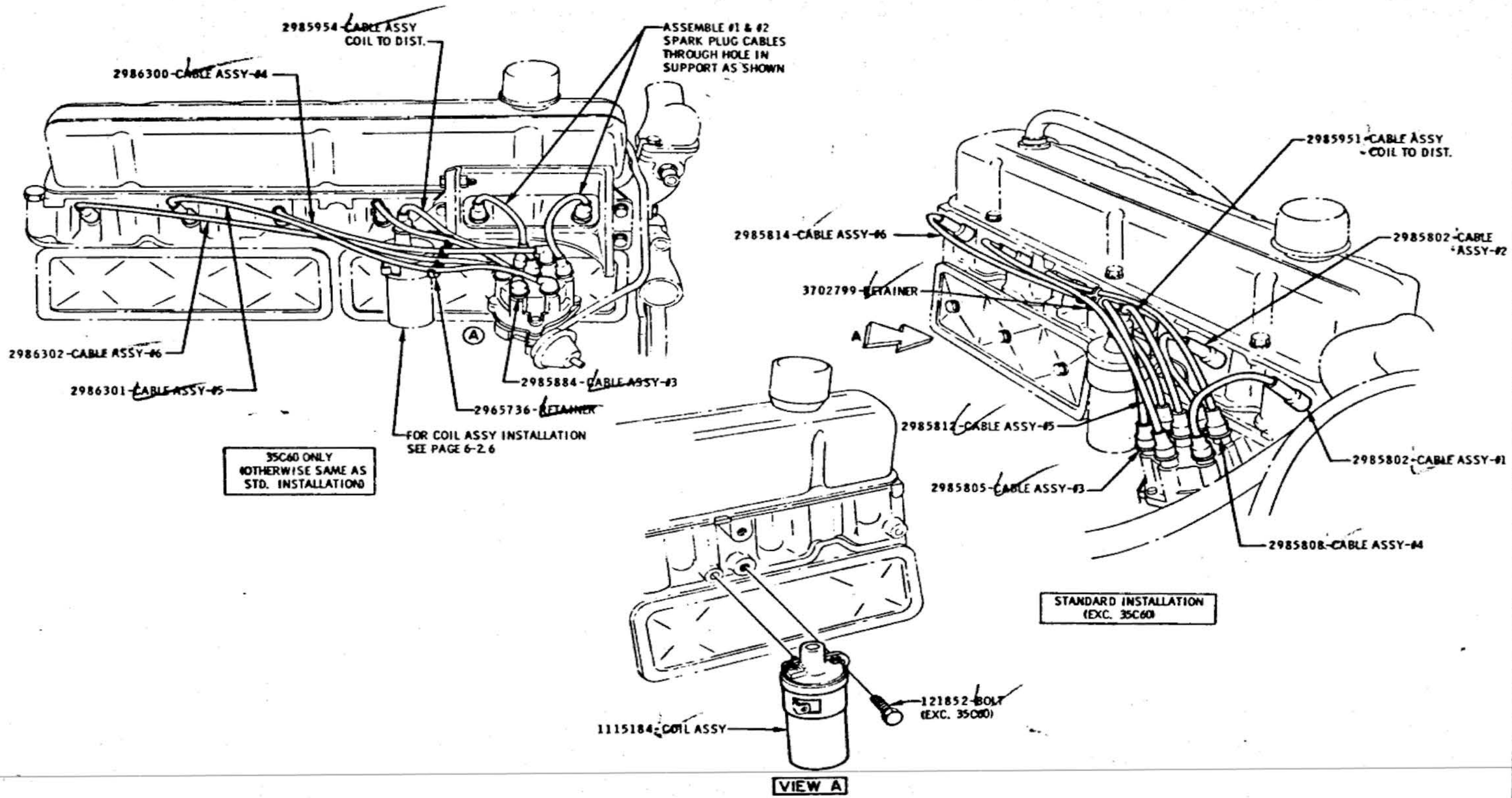

L6 IGNITION COIL & CABLES

DATE	SYM	REVISION	DR.	CK.	DATE	SYM	REVISION	DR.	CK.	DATE	SYM	REVISION	DR.	CK.
										3-6-65	A	CABLE ASSY ENDS REVISED		

INSTALLATION	ENGINE DRESS		
DATE APRIL 10, 1965	FIRST USED 1966	Oldsmobile Service ILLUSTRATION	PAGE 6-2.13
DR. BY W.C. MASON			
CHECKED	SERIES A	REF.	PART NO. 589998
APPR.			
APPR.			

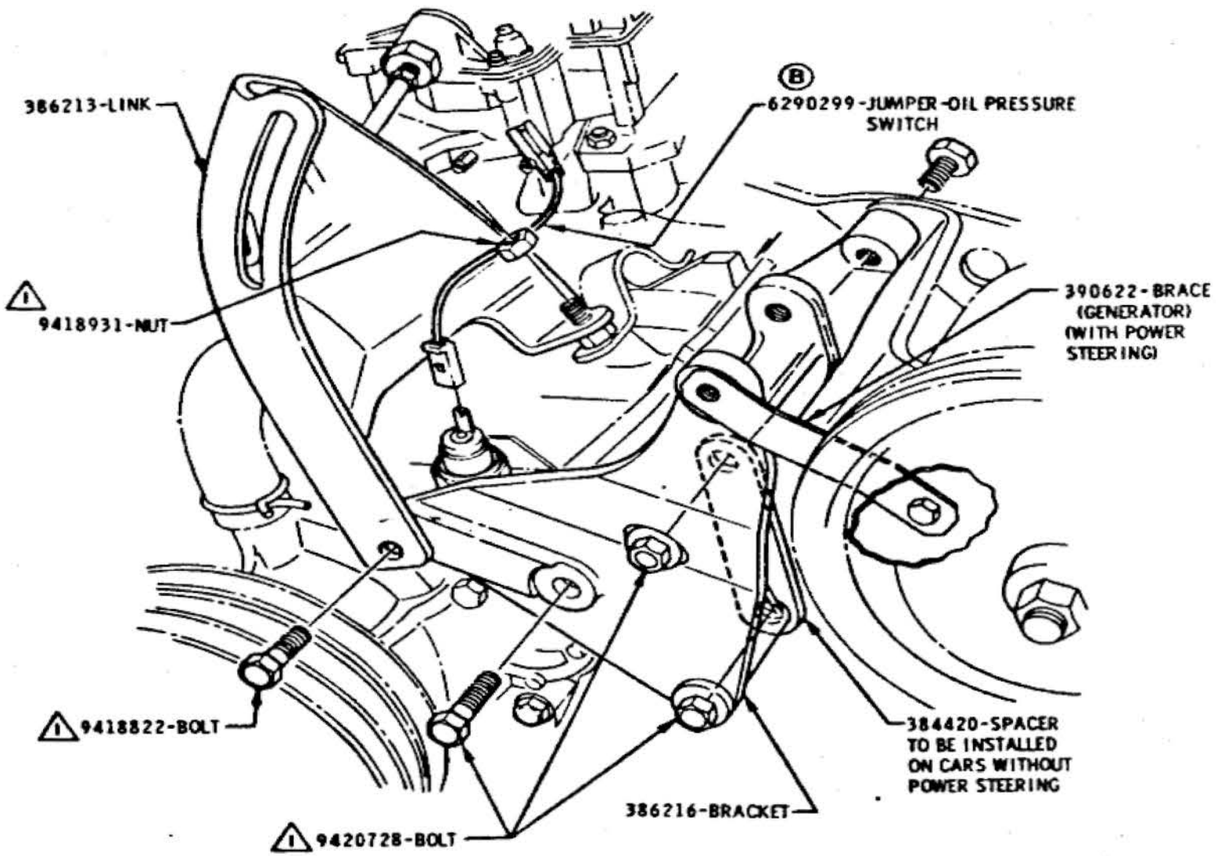

INSTALLATION OF GENERATOR MOUNTING BRACKET

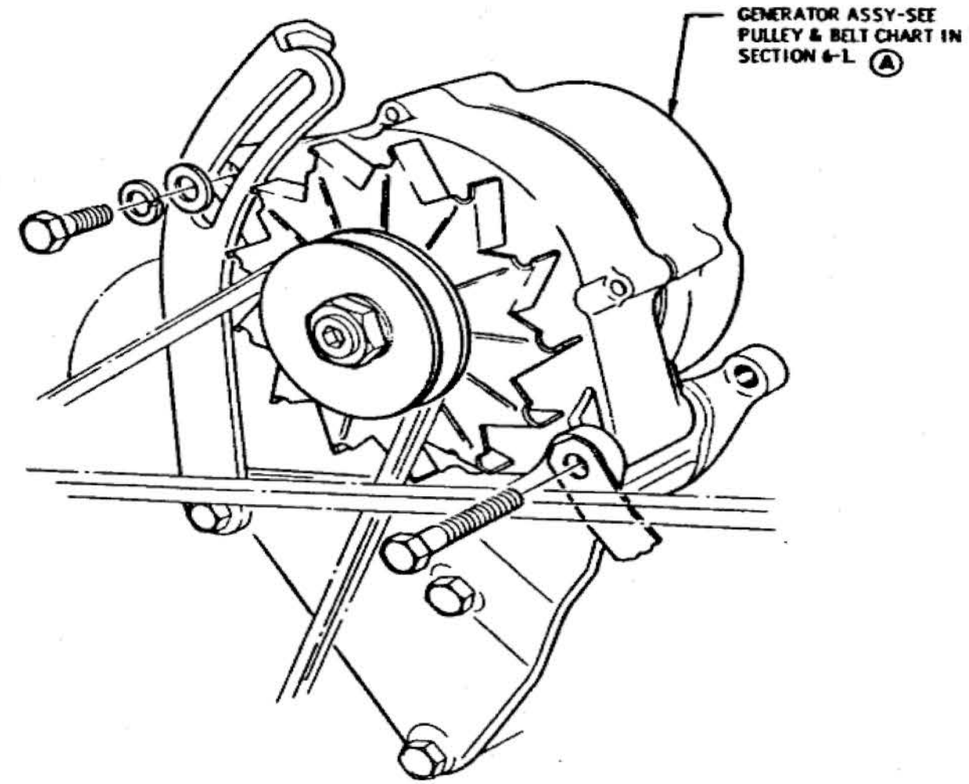

INSTALLATION OF GENERATOR ASSY TO MOUNTING BRACKETS

(1) 25-35 LB. FT.

BALANCE OF INFORMATION SAME AS STANDARD CAR

V-8 GENERATOR MOUNTING WITH AIR CONDITIONING

DATE	SYM	REVISION	DR.	CK.	DATE	SYM	REVISION	DR.	CK.	DATE	SYM	REVISION	DR.	CK.
										1-18-66	B	PART NO. ADDED	DT	DT
										11-18-65	A	NOTE REVISED	JDT	

INSTALLATION	ENGINE DRESS		
DATE MAY 12, 1965	FIRST USED 1966	Oldsmobile Graphic Illustration	PAGE 6-2.14
DR. BY ED J. ROE			
CHECKED	SERIES A	REF.	PART NO. 589998
APPR.			
APPR.			

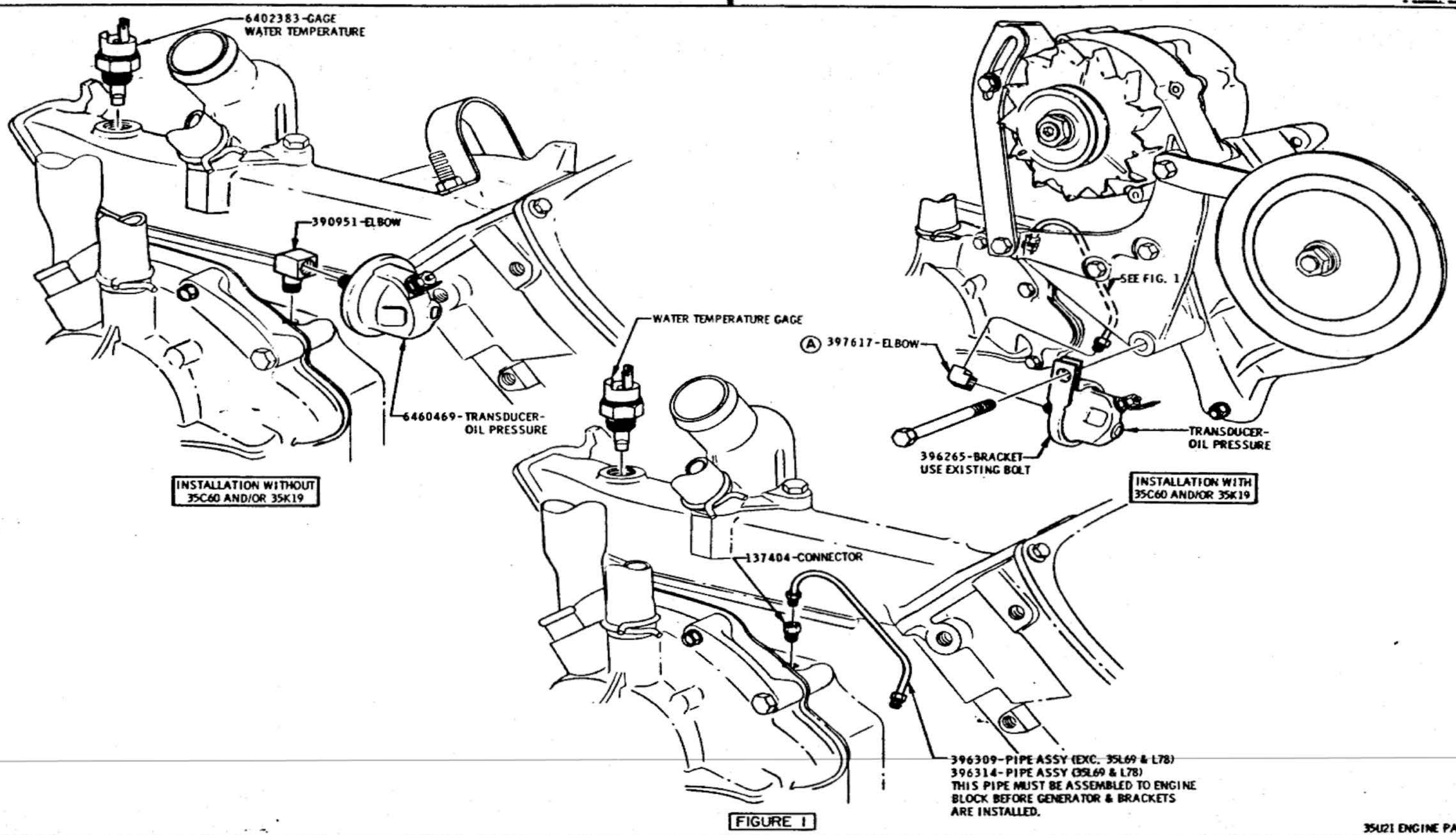

FIGURE 1

35U21 ENGINE PARTS

DATE	SYM	REVISION	DR.	CK.	DATE	SYM	REVISION	DR.	CK.	DATE	SYM	REVISION	DR.	CK.
										5-27-66	A	WAS 442239-ELBOW		

INSTALLATION	ENGINE DRESS		
DATE MARCH 2, 1966	FIRST USED 1966	Oldsmobile ILLUSTRATION	PAGE 6-214 A
DR. BY W.C. MASON			
CHECKED	SERIES A	REF.	PART NO. 589998
APPR.			
APPR.			

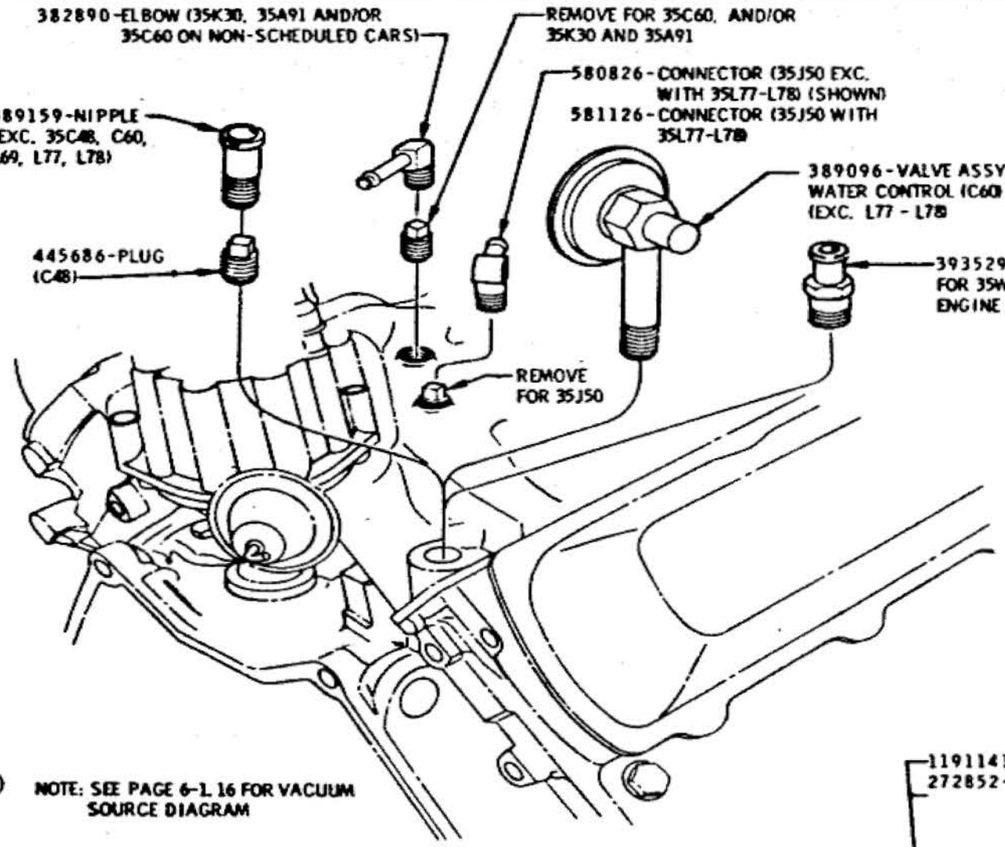

(L) NOTE: SEE PAGE 6-1.16 FOR VACUUM SOURCE DIAGRAM

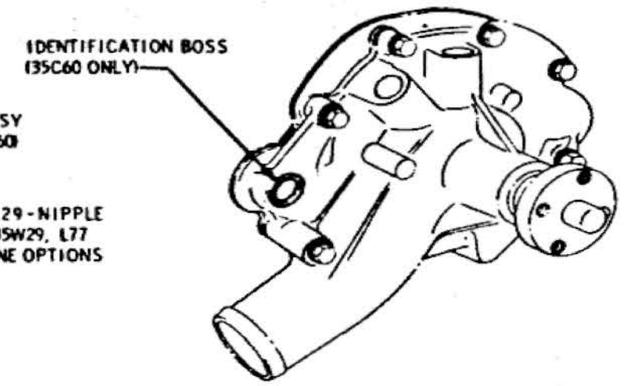

V-8 WATER PUMP 35C60 ONLY

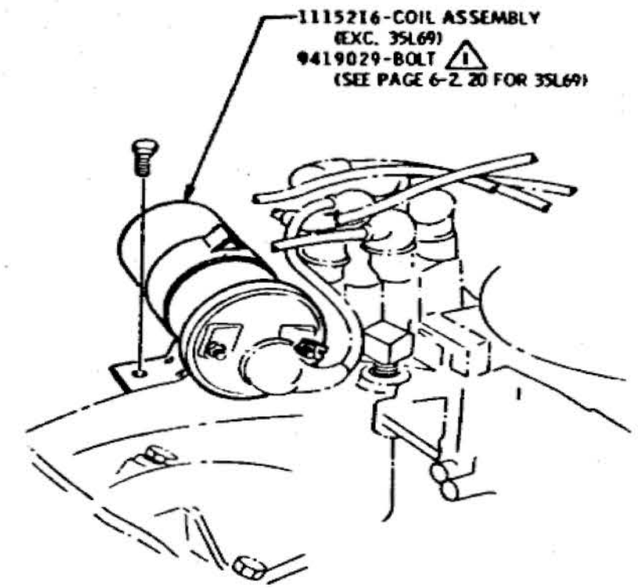

35L77 & 35L78 (J)

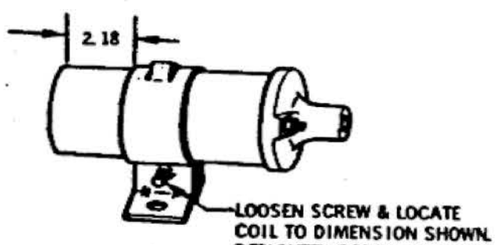

(K) 35L77-L78 WITH 35K19 ONLY

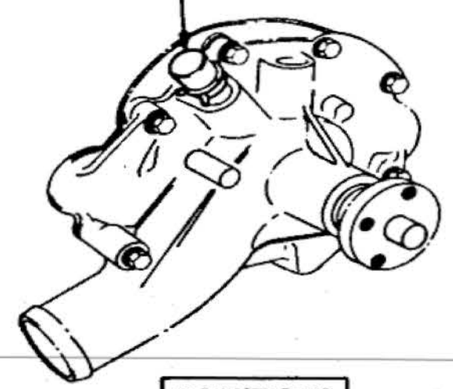

V-8 WATER PUMP 35C48 ONLY

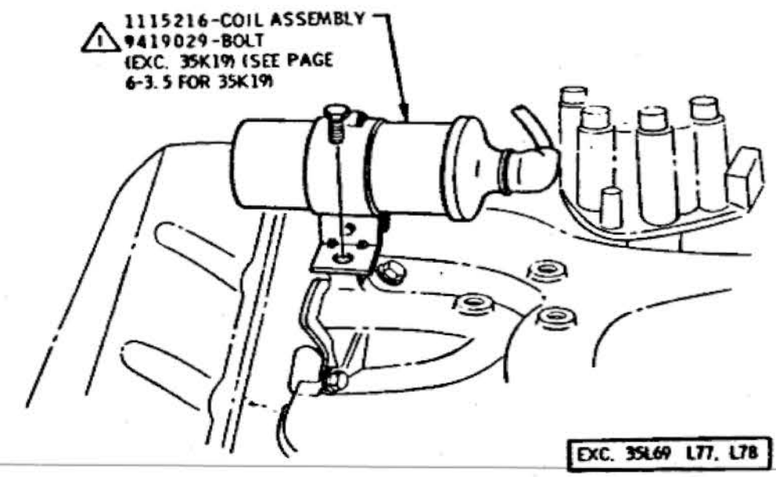

EXC. 35L69 L77, L78 (J)

(1) 10-15 LB. FT.

V8 WATER VALVES, OUTLETS, & PLUGS & COIL ASSY

DATE	SYM	REVISION	DR.	CK.	DATE	SYM	REVISION	DR.	CK.	DATE	SYM	REVISION	DR.	CK.
					1-21-66	K	VIEW ADDED			8-10-65	E	USAGE REVISED		
					12-10-65	J	COILS ADDED			6-25-65	D	USAGE REVISED		
					11-26-65	H	NOTE REVISED			6-16-65	C	393529 ADDED		
					8-10-65	G	NOTE ADDED			5-20-65	B	NIPPLE ADDED		
3-11-66	L	NOTE REVISED			8-10-65	F	PART NUMBERS ADDED			5-20-65	A	VIEW REMOVED		

INSTALLATION — ENGINE DRESS

DATE MAY 14, 1965
DR. BY ED J. ROE
CHECKED
APPR.

FIRST USED 1966 — Oldsmobile ILLUSTRATION — SERIES A — REF.

PAGE 6-2.15

PART NO. 589998

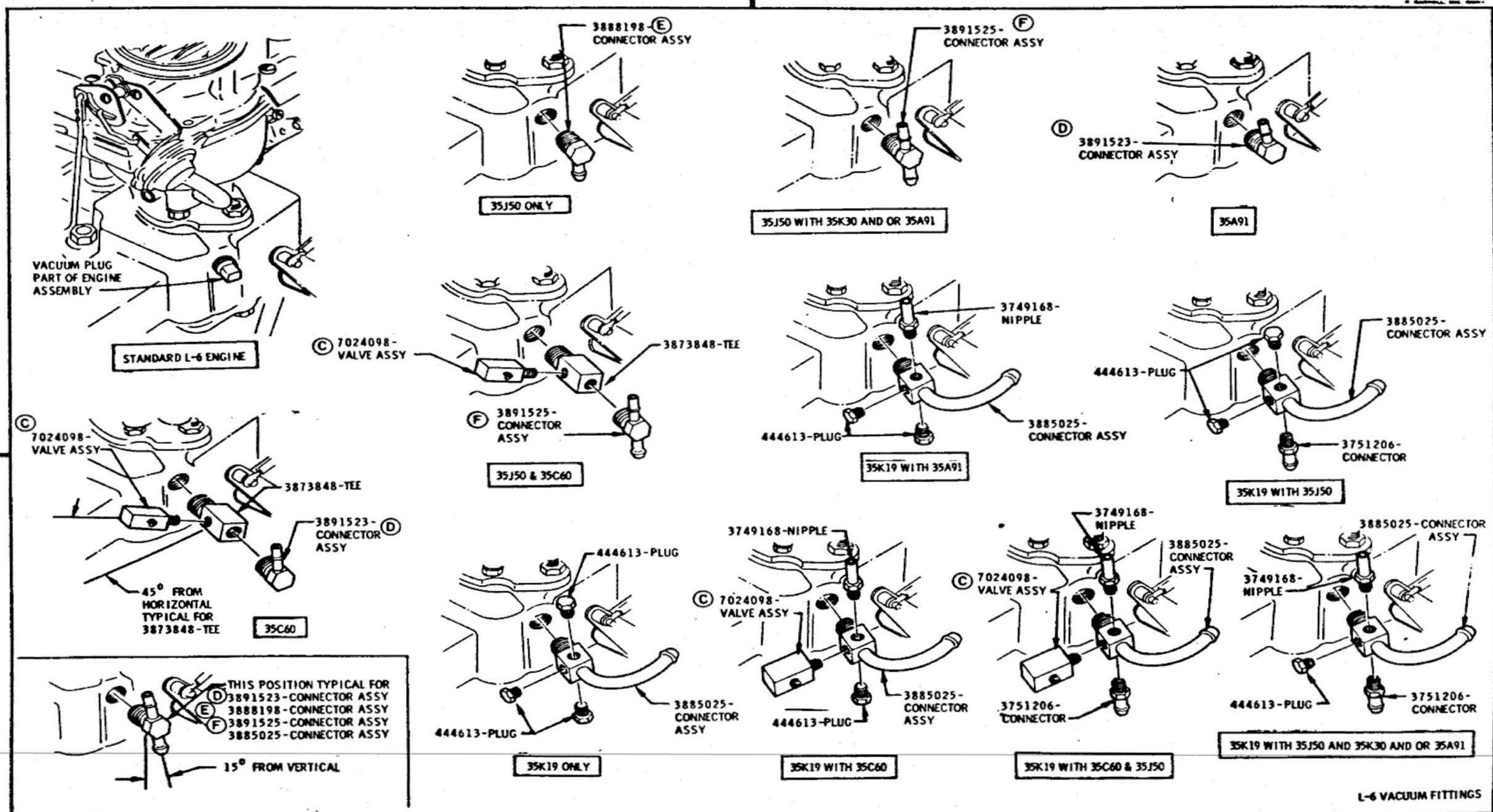

L-6 VACUUM FITTINGS

DATE	SYM	REVISION	DR.	CK.	DATE	SYM	REVISION	DR.	CK.	DATE	SYM	REVISION	DR.	CK.
										2-1-66	C_2	WAS 3868857 VAC. FIT.	J.P.	
										2-1-66	D_2	WAS 3868852 VAC. FIT.	J.P.	
										2-1-66	C_2	WAS AIRATOR	J.P.	
										10-5-65	E_1	TITLE REVISED		
					2-1-66	F_2	WAS 3868858 VAC. FIT.	J.P.		6-17-65	A_2	TITLE REVISED		

INSTALLATION — ENGINE DRESS

DATE MAY 18 1963
DR. BY ED J. ROE
CHECKED
APPR.

FIRST USED 1966 — Oldsmobile Service ILLUSTRATION

SERIES A — REV.

PAGE 6-2.16

PART NO. 589998

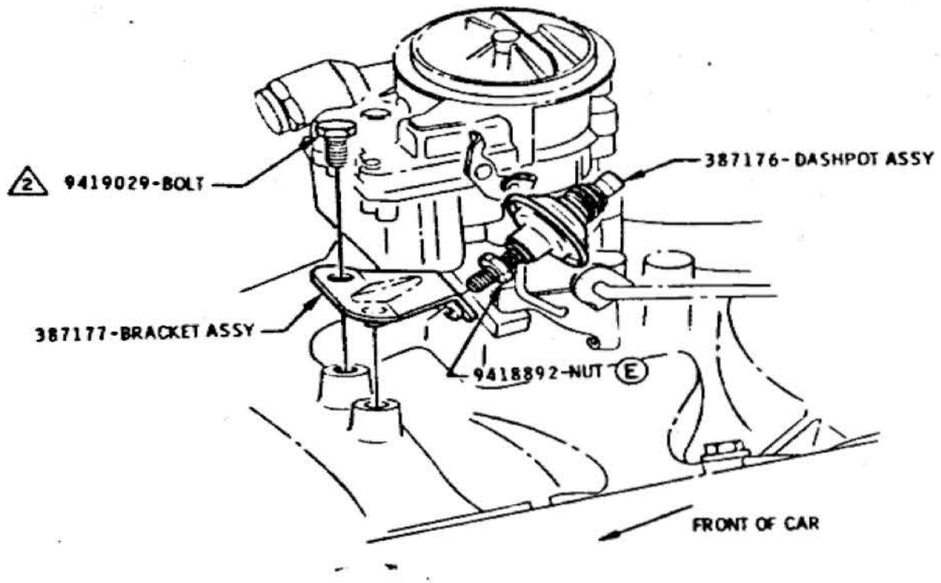

2 BBL. MODELS

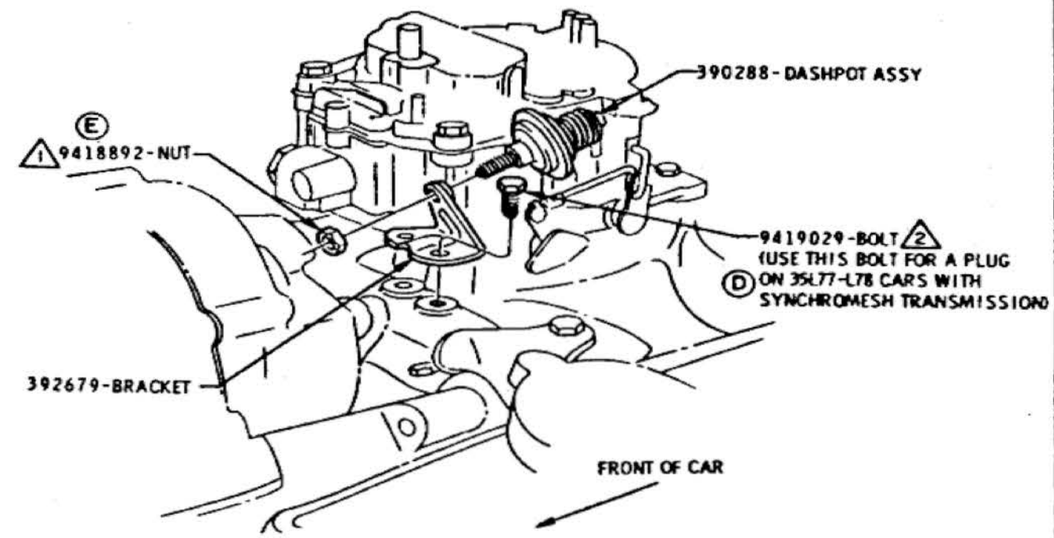

4 BBL. MODELS
35C60 ONLY

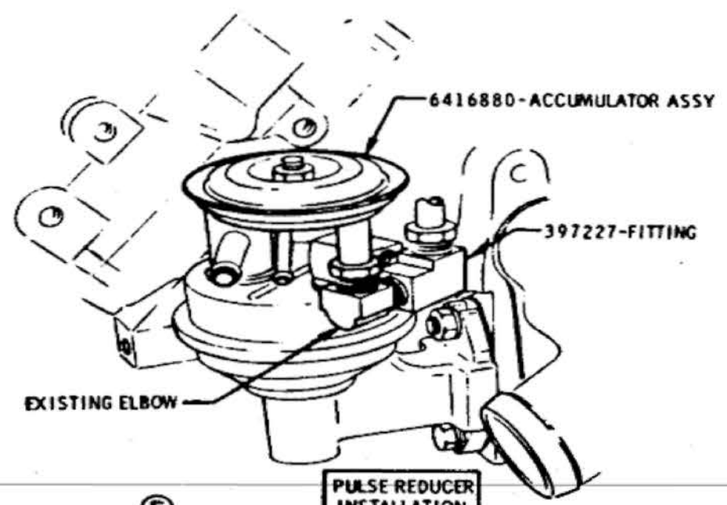

F

PULSE REDUCER INSTALLATION
(35C60 FOR 400 CU. IN. ENGINES ONLY)

1 96-132 LB. IN.
2 10-15 LB. FT.

V8 DASHPOT TO ENGINE (EXC. 35K19)

DATE	SYM	REVISION	DR.	CK.	DATE	SYM	REVISION	DR.	CK.	DATE	SYM	REVISION	DR.	CK.
										8-19-65	E	WAS 115702-NUT		
										8-10-65	D	NOTE ADDED		
										8-10-65	C	115702-NUT ADDED		
										8-2-65	B	103320-1 WASHER REMOVED		
					4-27-66	F	VIEW ADDED			6-24-65	A	115702 NUT REMOVED		

INSTALLATION
DATE MAY 18, 1965
DR. BY W. C. MASON
CHECKED
APPR. R. C. STEINEL
APPR.

ENGINE DRESS

FIRST USED 1966

ILLUSTRATION

SERIES A

REF.

PAGE 6-2.17

PART NO. 589998

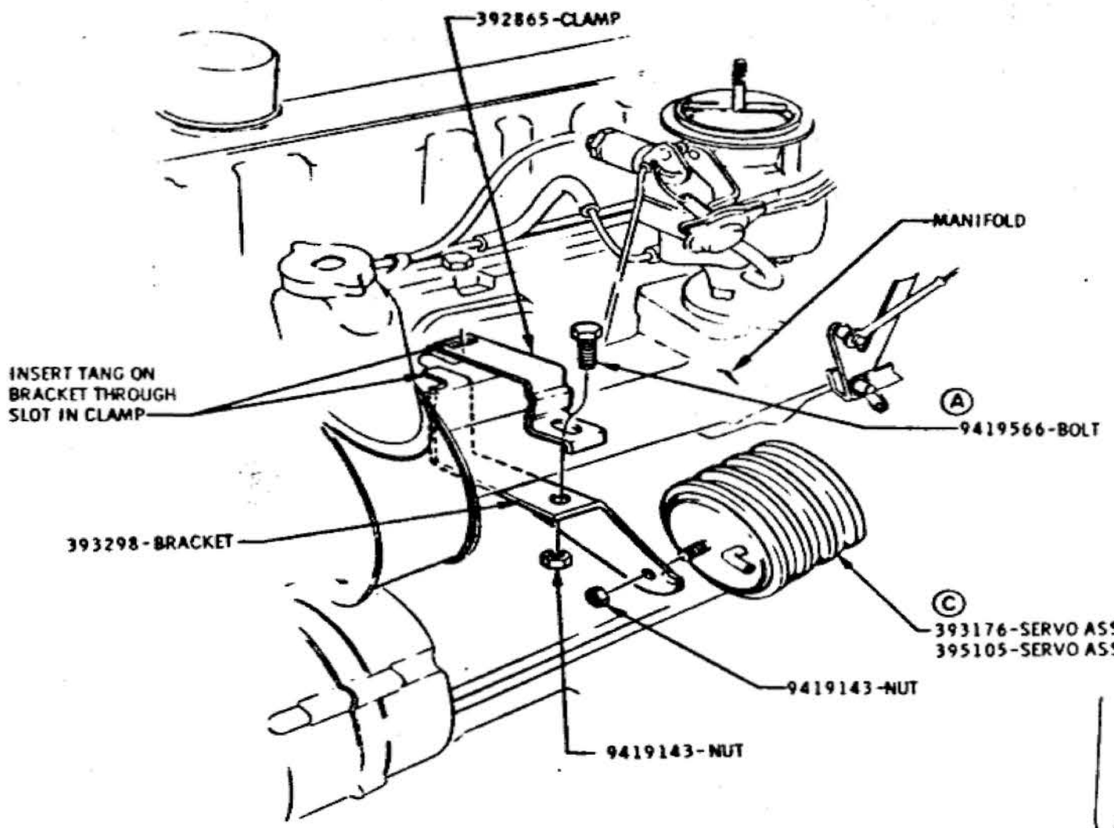

INSTALLATION OF SERVO ASSEMBLY

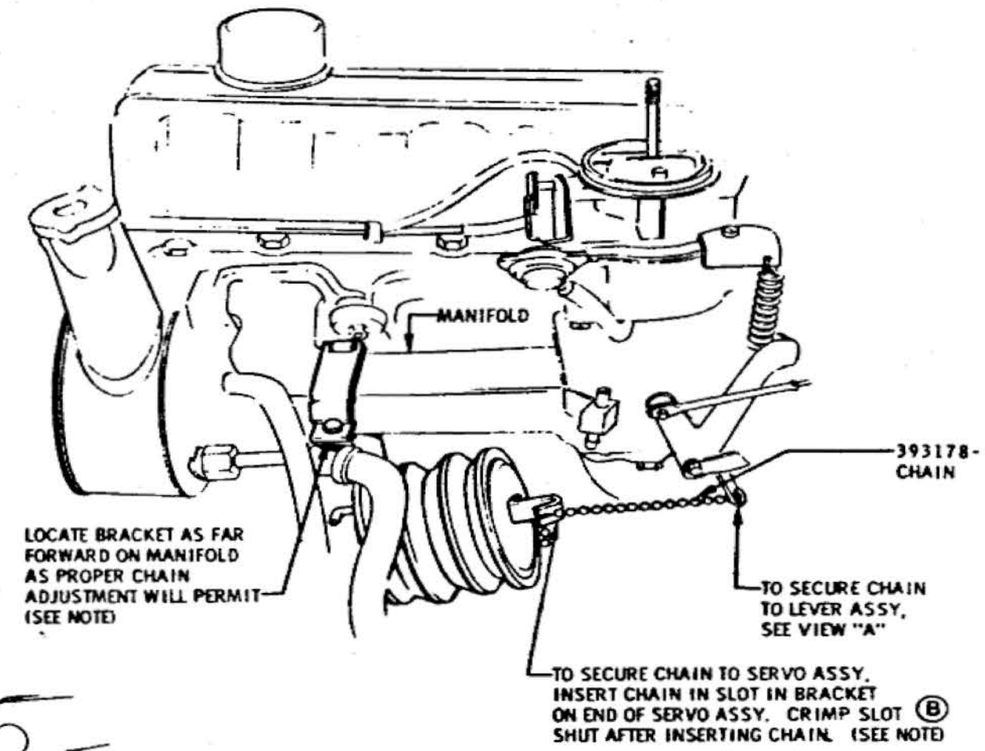

NOTE:
AFTER SECURING CHAIN TO LEVER ASSY, ATTACH OPPOSITE END OF CHAIN TO BRACKET ON SERVO ASSY KEEPING CHAIN TAUT, THEN SLACKEN CHAIN ONE BEAD LENGTH.

ATTACHMENT AND ADJUSTMENT OF CHAIN FROM SERVO ASSY TO LEVER

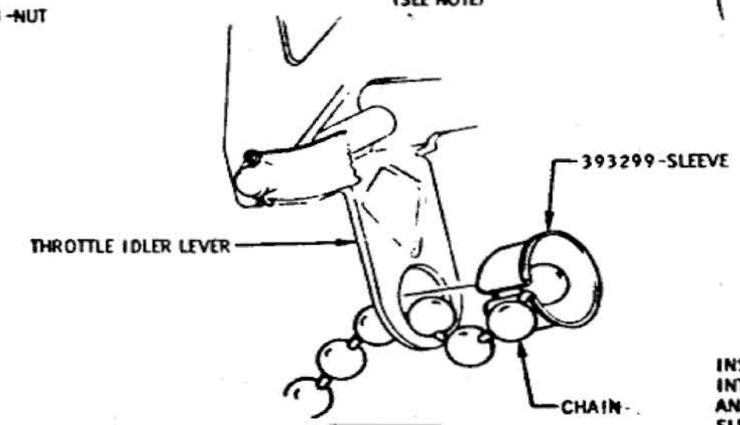

INSERT CHAIN INTO SLEEVE AND SEAT SLEEVE IN HOLE IN LEVER

VIEW A

ATTACHING CHAIN TO THROTTLE IDLER LEVER ASSY

35K30 - VACUUM SERVO MOUNTING TO L-6

DATE	SYM	REVISION	DR.	CK.	DATE	SYM	REVISION	DR.	CK.	DATE	SYM	REVISION	DR.	CK.
										11-17-65	C	SECOND TYPE ADDED		DT
										9-14-65	B	CRIMP NOTE ADDED		
										6-18-65	A	9419566 ADDED		

INSTALLATION ENGINE DRESS

DATE MAY 25, 1965
DR. BY B. PARKER
CHECKED
APPR. J.C. STEPHL
APPR.

FIRST USED 1966
SERIES A
Oldsmobile GRAPHIC ILLUSTRATION
REF. 35K30 TR6044
PAGE 6-2.18
PART NO. 589998

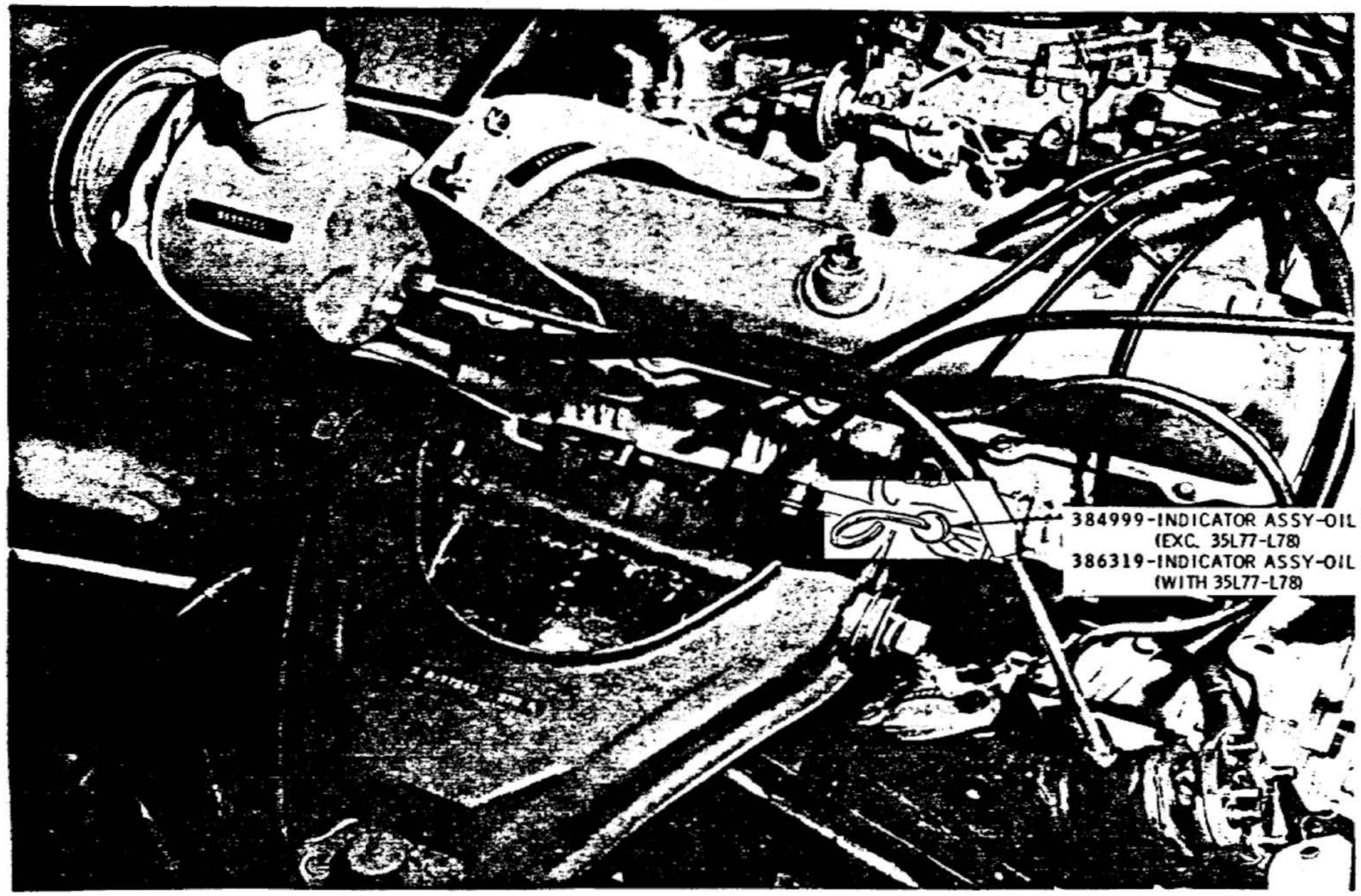

V8 OIL INDICATOR ASSY

DATE	SYM	REVISION	DR.	CK.	DATE	SYM	REVISION	DR.	CK.
					8-4-65	A	35L69 REMOVED		

INSTALLATION	ENGINE DRESS		
DATE MAY 26, 1965	FIRST USED 1966	Oldsmobile GRAPHIC ILLUSTRATION	PAGE 6-2.19
DR. BY S. MC DONALD			
CHECKED M.G. Barnhart	SERIES A	REF.	PART NO. 589998
APPR.			
APPR.			

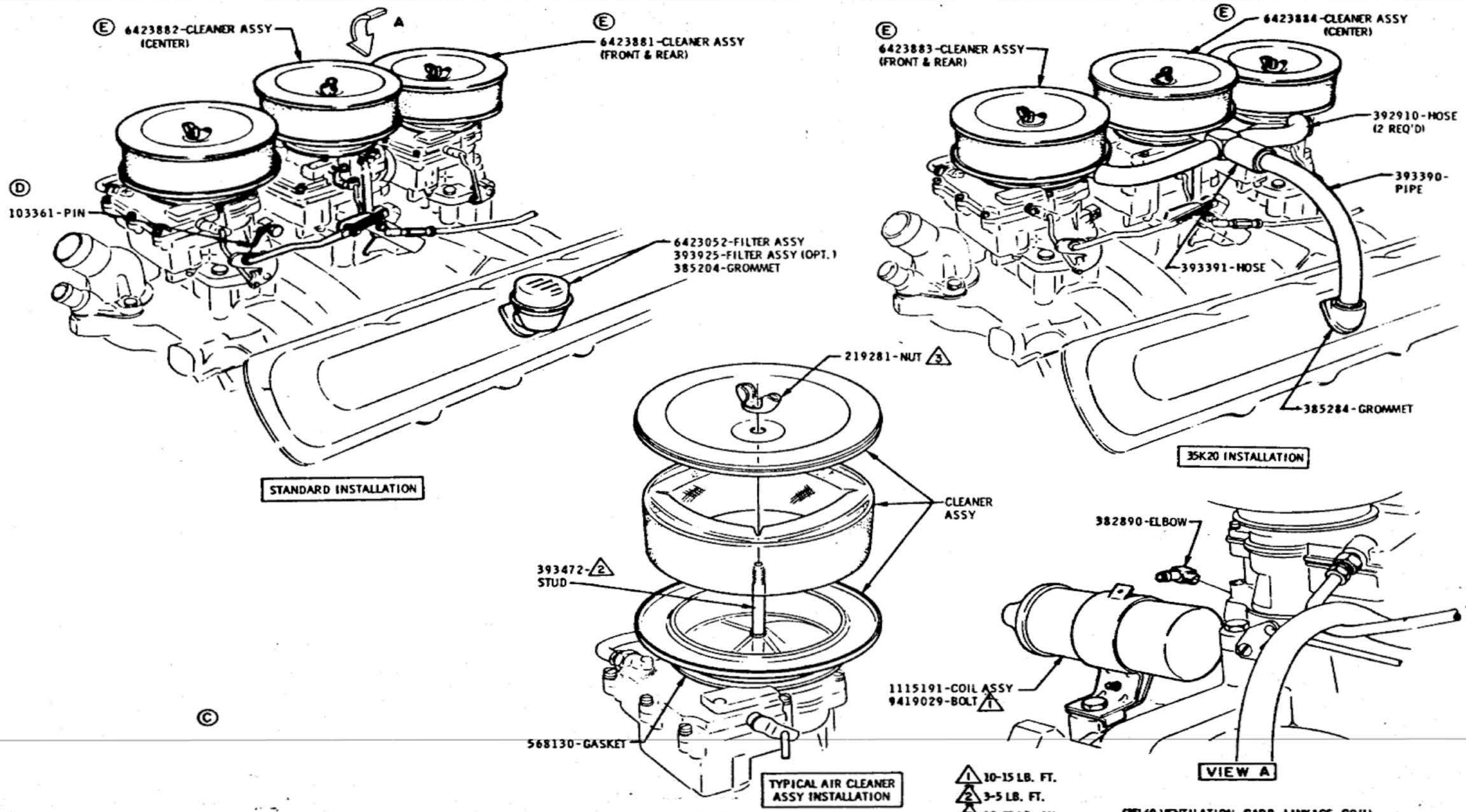

©

(35L69 VENTILATION, CARB. LINKAGE, COIL)

DATE	SYM	REVISION	DR.	CK.	DATE	SYM	REVISION	DR.	CK.	DATE	SYM	REVISION	DR.	CK.
										12-2-66	E	PART NUMBERS REVISED		
										12-13-65	D	PART NUMBER ADDED		
										12-13-65	C	VIEW REMOVED		
										12-13-65	B	TORQUE ADDED		
										12-13-65	A	NOTES ADDED		

INSTALLATION ENGINE DRESS

DATE NOV. 15, 1965

DR. BY D. C. WIMBERLY

CHECKED

APPR.

APPR.

FIRST USED 1966

Oldsmobile GRAPHIC ILLUSTRATION

SERIES A

SEC.

PAGE 6-2.20

PART NO. 589998

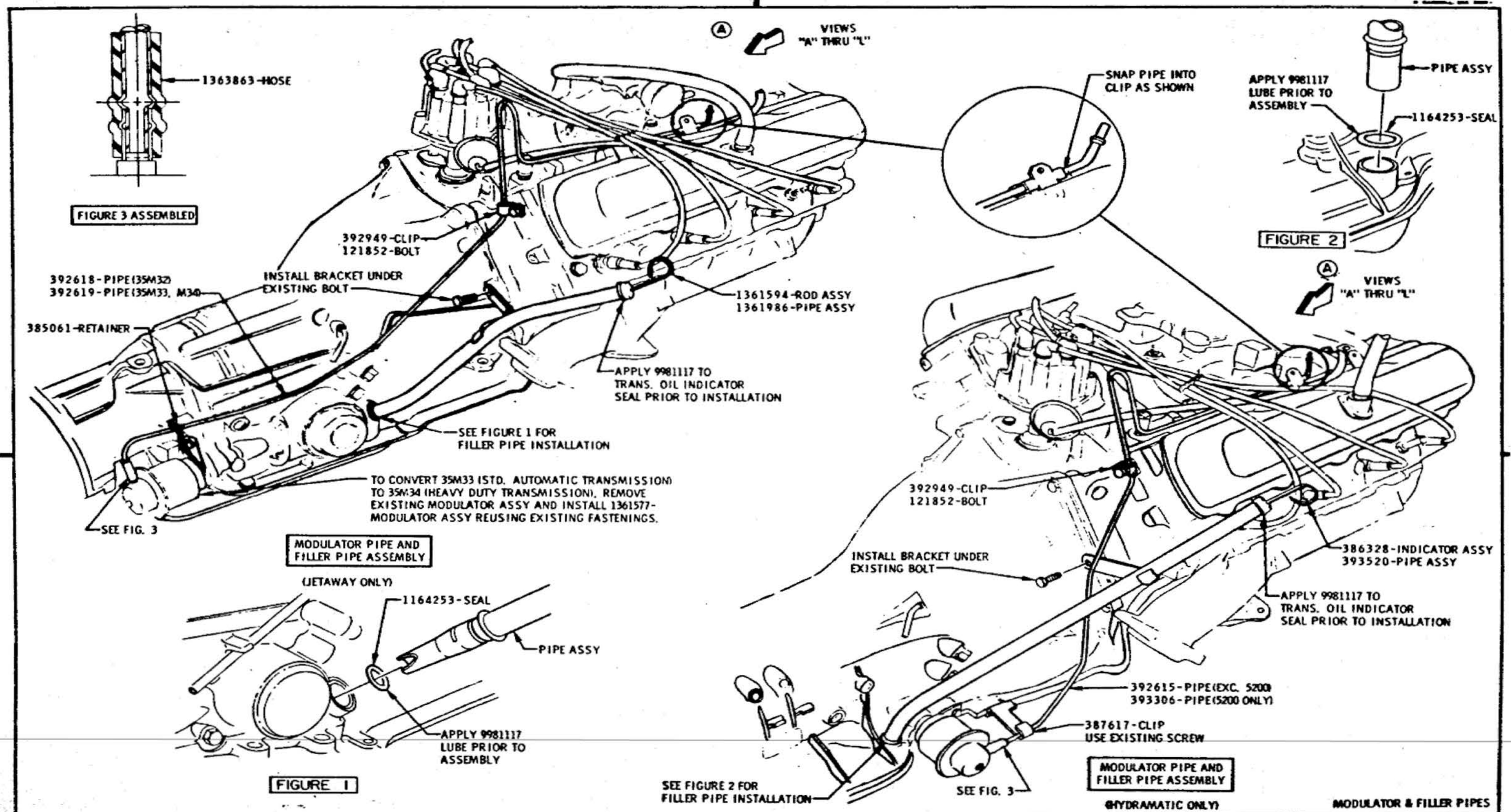

MODULATOR & FILLER PIPES

DATE	SYM	REVISION	DR.	CK.	DATE	SYM	REVISION	DR.	CK.	DATE	SYM	REVISION	DR.	CK.
										4-6-66	A_2	VIEW ARROWS ADDED		

INSTALLATION	ENGINE DRESS (V8)		(SHEET 1 OF 4)
DATE MARCH 17, 1966	FIRST USED 1966	Oldsmobile Graphic Illustration	PAGE 6-2.21
DR. BY W.E. MASON			
CHECKED	SERIES A-B-C	REF. 783A 783C	PART NO. 396919
APPR. R.C. STEINEL			
APPR.			

MODULATOR & DISTRIBUTOR HOSE ROUTING CHART							
ENGINE & CARB.	TRANS.	EXC. 35K19 AND/OR A/C	A/C EXC. 35K19	35K19 EXC. A/C	35K19 WITH A/C	35K19 DELETE EXC. A/C	35K19 DELETE WITH A/C
330 cu. in. "A" - 2 BBL	JT	VIEW "A"	VIEW "A"	VIEW "C"	VIEW "C"	VIEW "B"	VIEW "B"
330 cu. in. "B" - 2 BBL	JT	VIEW "A"	VIEW "A"	VIEW "C"	VIEW "C"	VIEW "B"	VIEW "B"
330 cu. in. "B" - 2 BBL	HT	VIEW "A"	VIEW "A"	VIEW "C"	VIEW "C"	VIEW "B"	VIEW "B"
425 cu. in. - 2 BBL	HT	VIEW "A"	VIEW "A"	VIEW "C"	VIEW "D"	VIEW "B"	VIEW "B"
330 cu. in. "A" - 4 BBL	JT	VIEW "E"	VIEW "G"	VIEW "H"	VIEW "H"	VIEW "F"	VIEW "G"
330 cu. in. "B" - 4 BBL	JT	VIEW "E"	VIEW "G"	VIEW "H"	VIEW "H"	VIEW "F"	VIEW "G"
330 cu. in. "B" - 4 BBL	HT	VIEW "E"	VIEW "E"	VIEW "K"	VIEW "K"	VIEW "F"	VIEW "F"
425 cu. in. - 4 BBL	HT	VIEW "E"	VIEW "E"	VIEW "K"	VIEW "L"	VIEW "F"	VIEW "F"
400 cu. in. - 4 BBL	JT	VIEW "E"	VIEW "G"	VIEW "J"	VIEW "J"	VIEW "F"	VIEW "G"

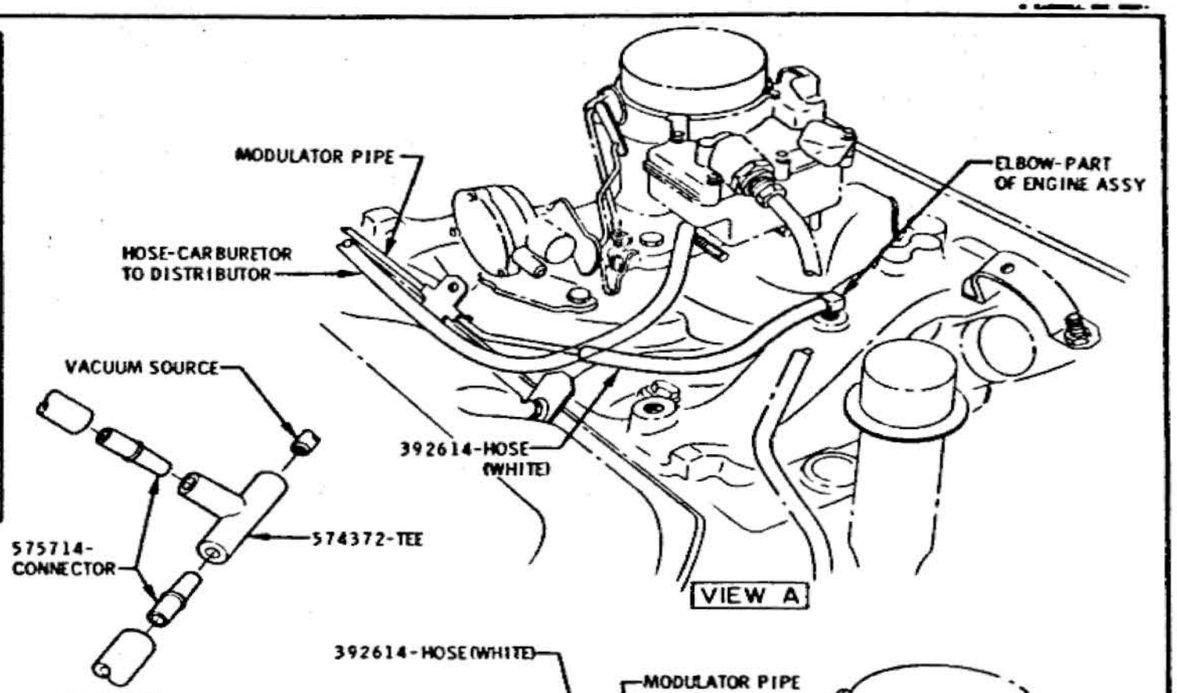

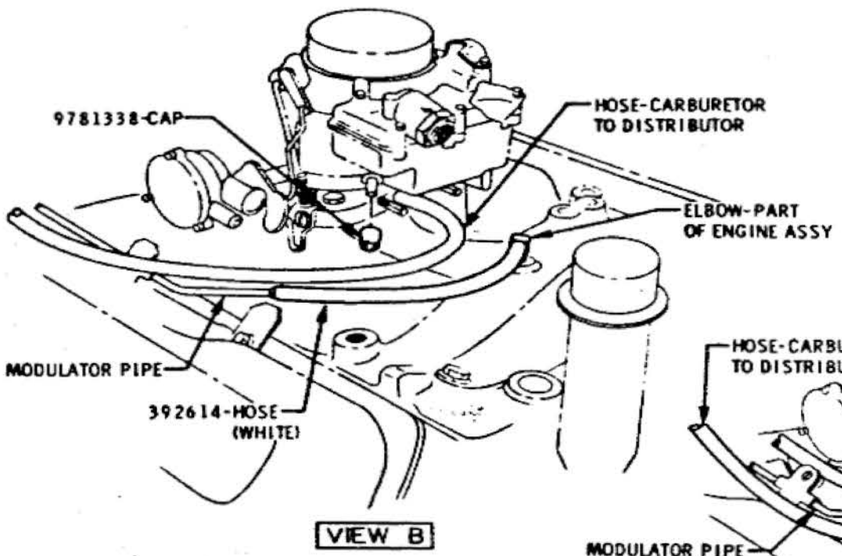

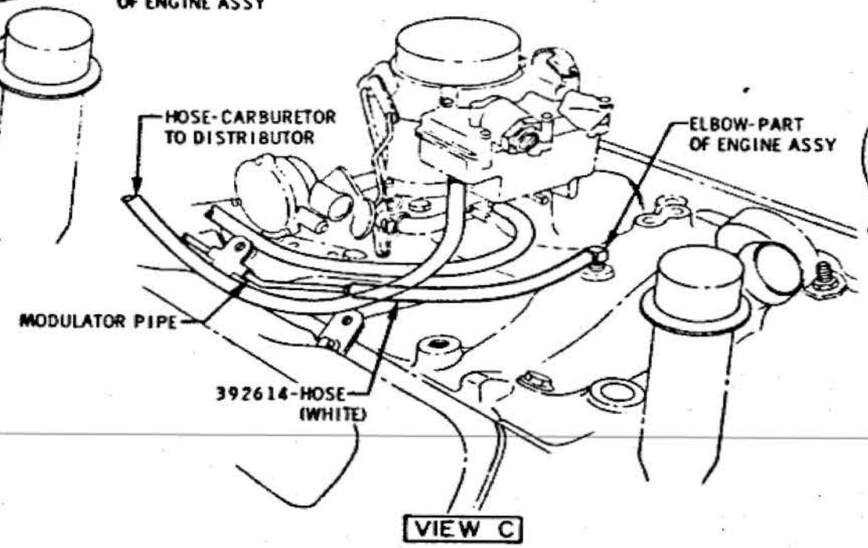

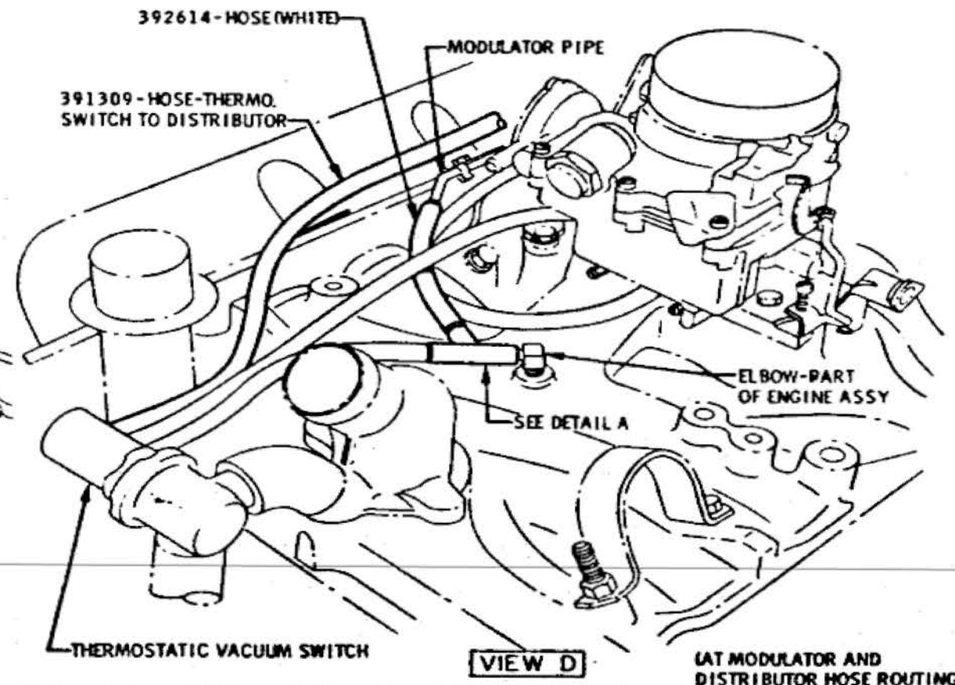

(AT MODULATOR AND DISTRIBUTOR HOSE ROUTING)

DATE	SYM	REVISION	DR.	CK.	DATE	SYM	REVISION	DR.	CK.	DATE	SYM	REVISION	DR.	CK.
										4-6-66	A	"VIEW" WAS "FIGURE"		

INSTALLATION — ENGINE DRESS (V8) (SHEET 2 OF 4)

DATE MARCH 17, 1966 — DR. BY W.E. MASON — CHECKED — APPR. R.C. STEMPEL — APPR.

FIRST USED 1966 — Oldsmobile GRAPHIC ILLUSTRATION — PAGE 6-2.22

SERIES A-B-C — REF. — PART NO. 396919

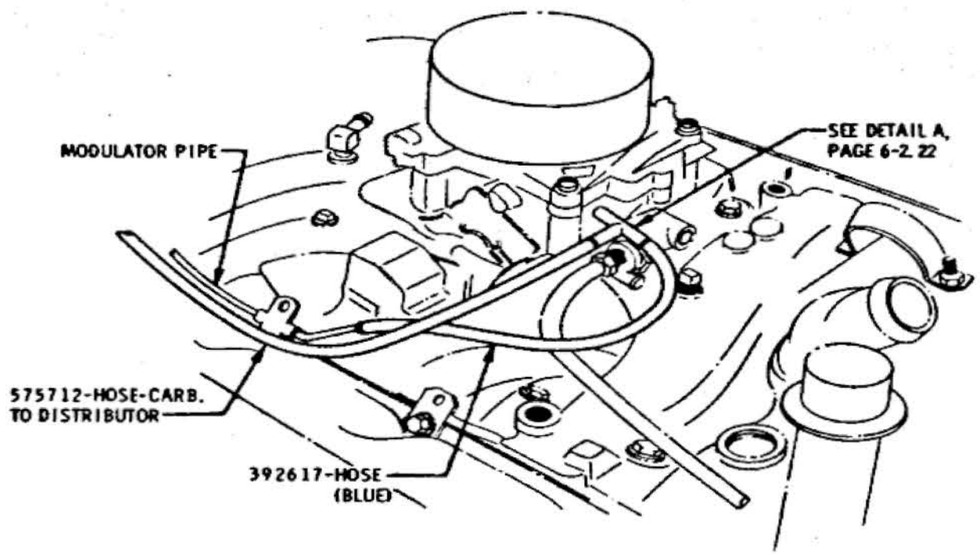

VIEW E

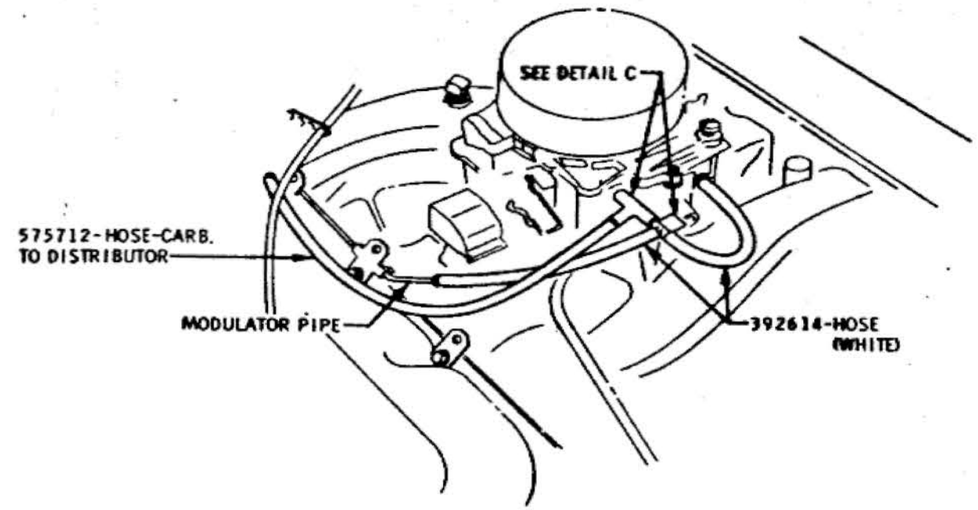

VIEW G

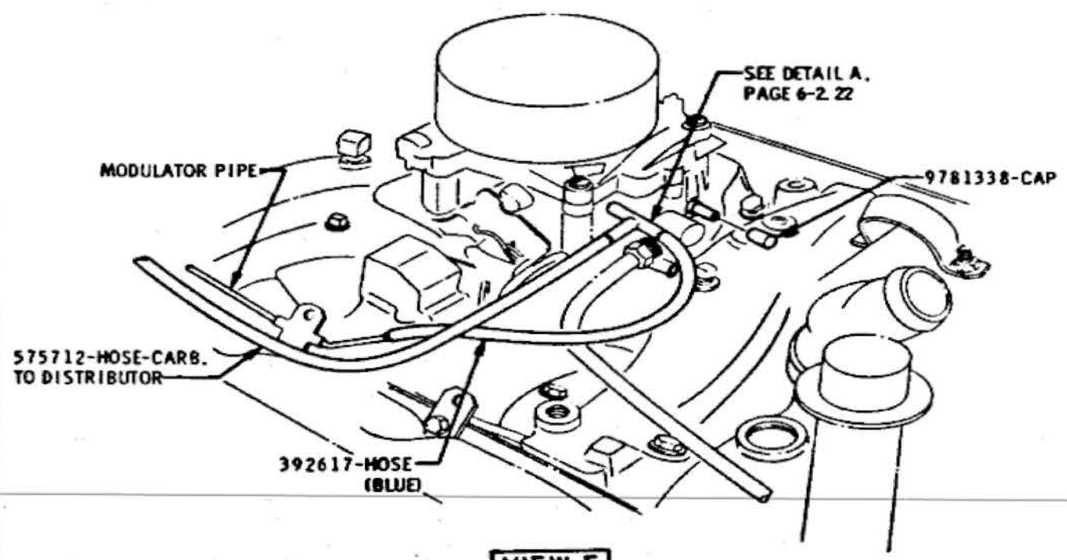

VIEW F

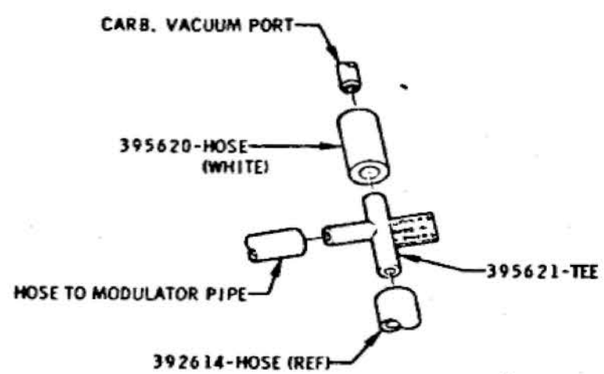

DETAIL B

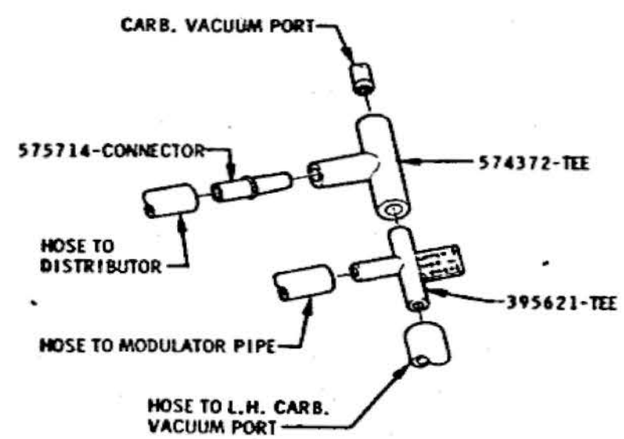

DETAIL C

(AT MODULATOR AND DISTRIBUTOR HOSE ROUTING)

DATE	SYM	REVISION	DR.	CK.	DATE	SYM	REVISION	DR.	CK.	DATE	SYM	REVISION	DR.	CK.
										4-6-66	A	VIEW "WAS" FIGURE		

INSTALLATION	ENGINE DRESS (V8)		(SHEET 3 OF 4)
DATE MARCH 17, 1966	FIRST USED 1966	Oldsmobile ILLUSTRATION	PAGE 6-2.23
DR. BY W.E. MASON			
CHECKED	SERIES A-B-C	REF.	PART NO. 396919
APPR. R.C. STEAKEL			
APPR.			

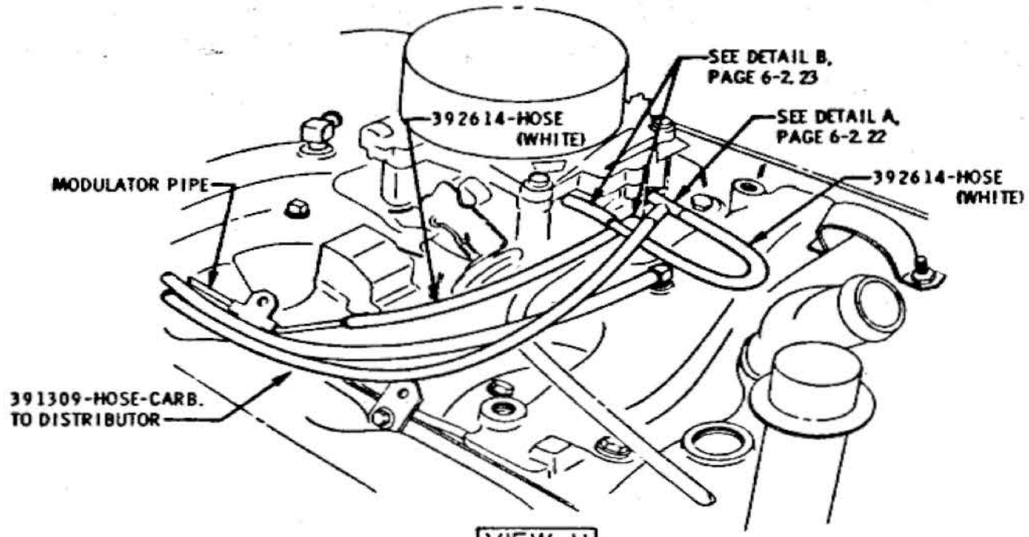

VIEW H

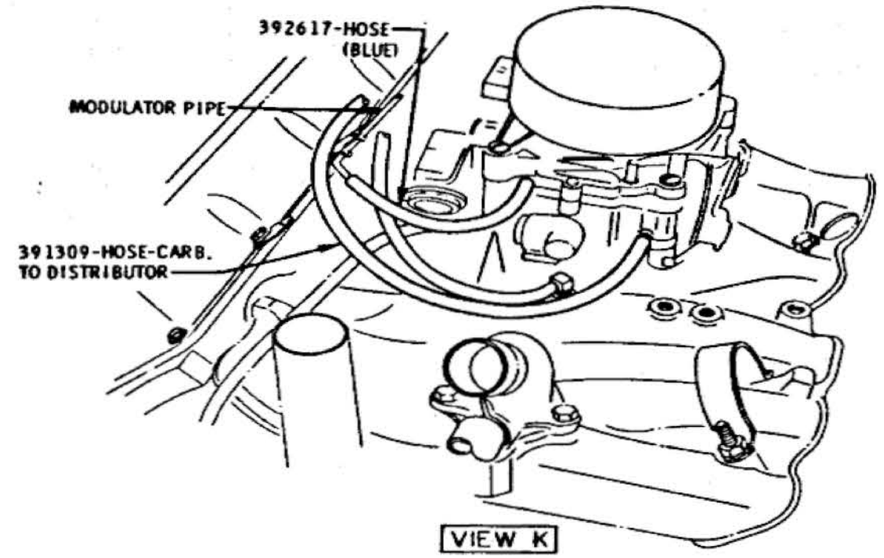

VIEW K

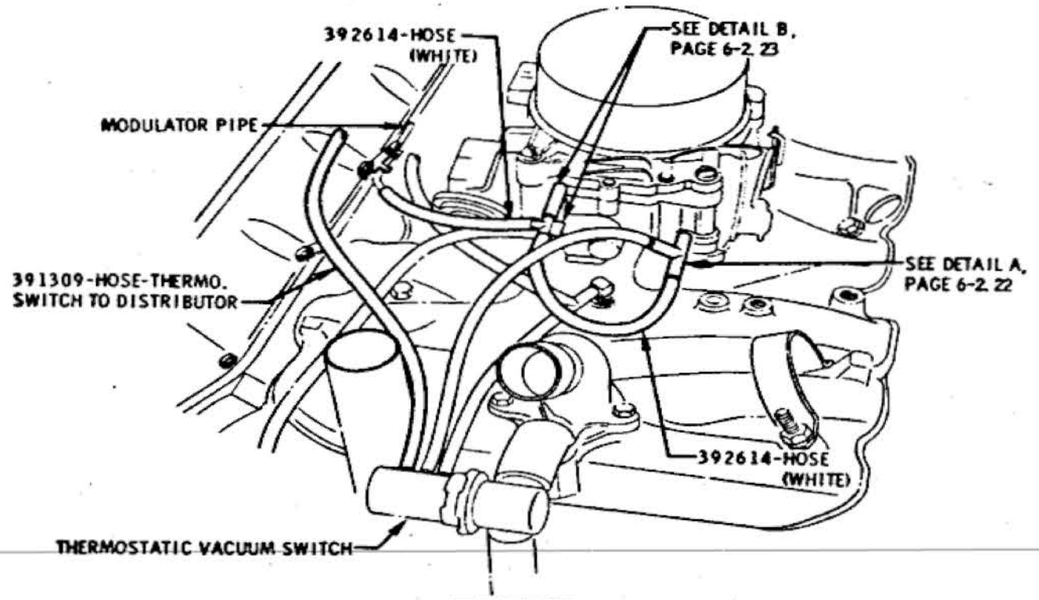

VIEW J

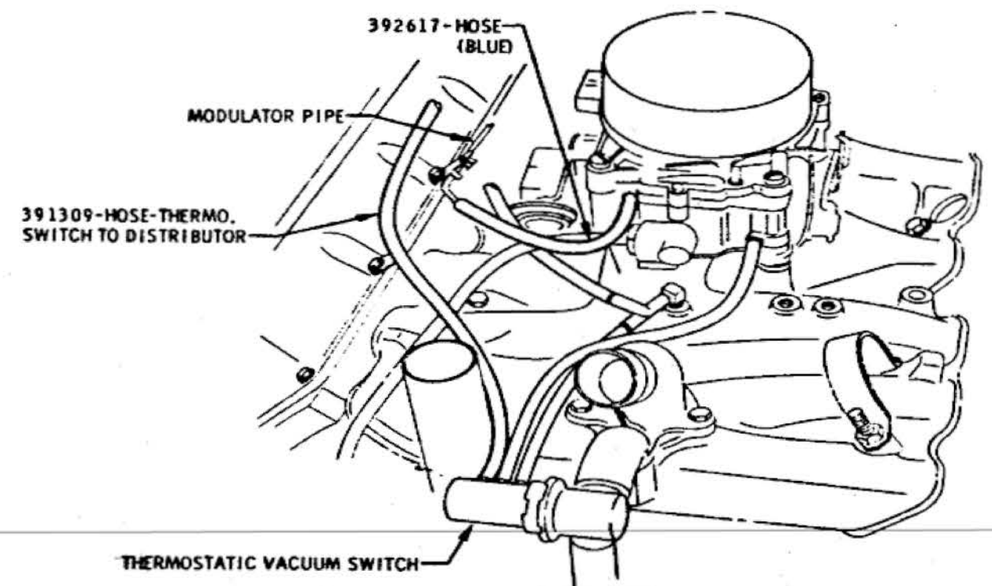

VIEW L

(AT MODULATOR AND DISTRIBUTOR HOSE ROUTING)

DATE	SYM	REVISION	DR.	CK.	DATE	SYM	REVISION	DR.	CK.	DATE	SYM	REVISION	DR.	CK.
										4-6-66	A	"VIEW" WAS "FIGURE"		

INSTALLATION — ENGINE DRESS (V8) (SHEET 4 OF 4)

DATE MARCH 17, 1966
DR. BY W.E. MASON
CHECKED
APPR. R.C. STOMKEL
APPR.

FIRST USED 1966 — Oldsmobile Service ILLUSTRATION

SERIES A-B-C — REF. — PART NO. 396919 — PAGE 6-2.24

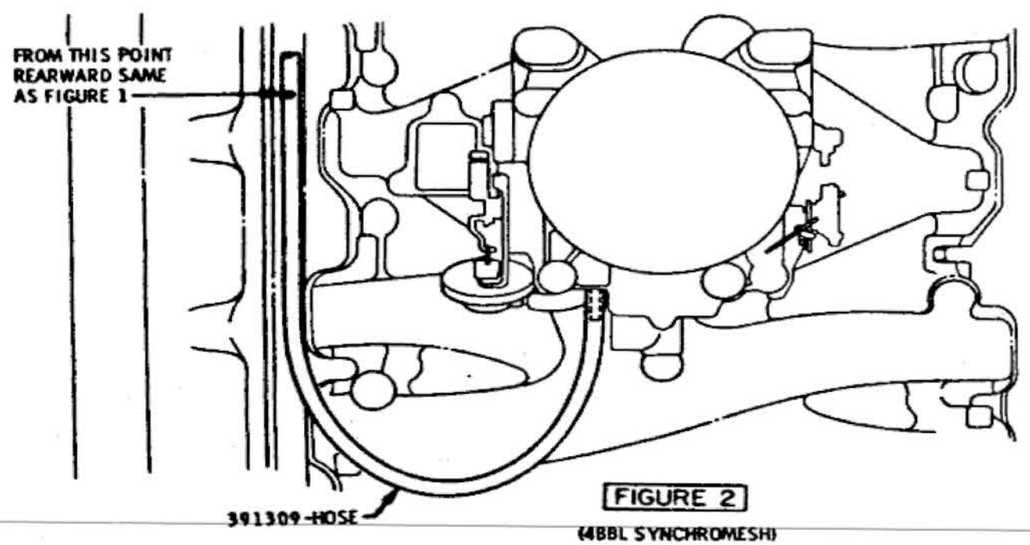

FIGURE 2
(4BBL SYNCHROMESH)

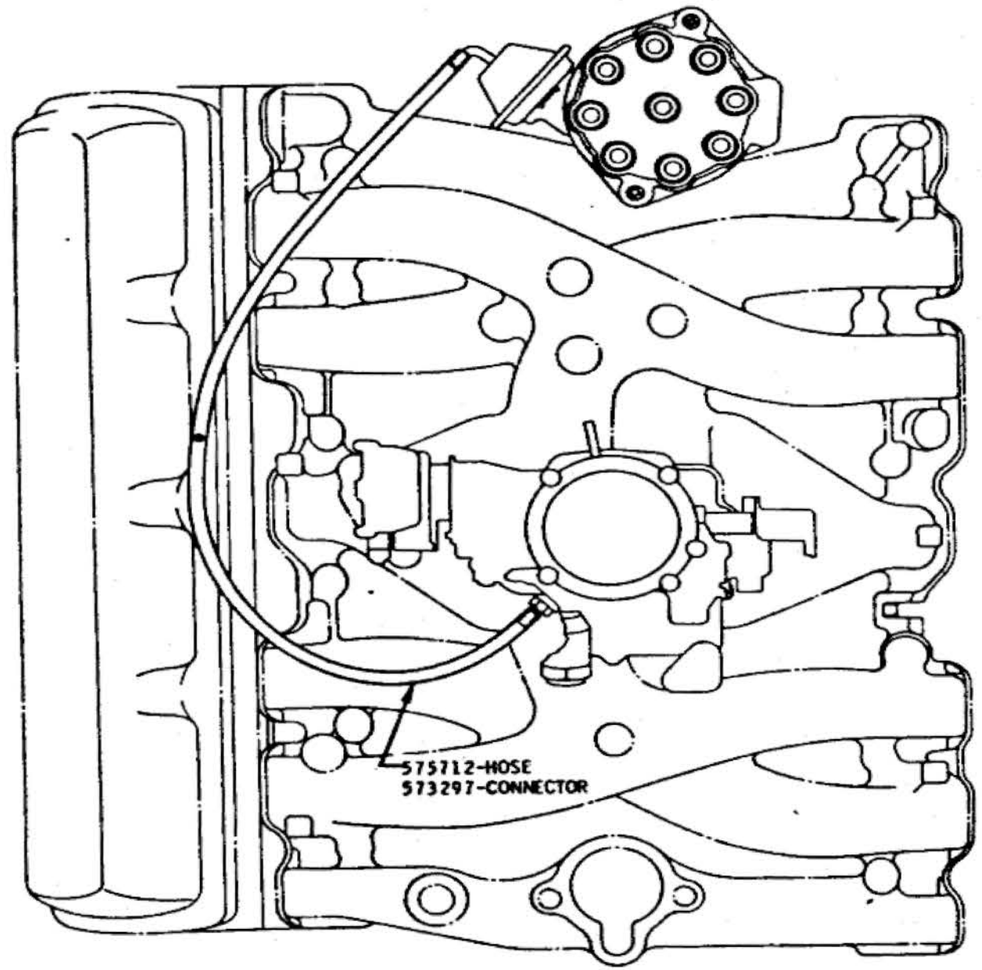

FIGURE 1
2 BBL SYNCHROMESH

V-8 ENGINES

DATE	SYM	REVISION	DR.	CK.	DATE	SYM	REVISION	DR.	CK.	DATE	SYM	REVISION	DR.	CK.

INSTALLATION **DISTRIBUTOR VACUUM HOSE (STD CAR)**

DATE APRIL 12, 1966	FIRST USED 1966	Oldsmobile Service ILLUSTRATION	PAGE 6-2.25
DR. BY ED J. ROE			
CHECKED			
APPR. R. S. McDonald	SERIES A-8	REV.	PART NO. 589998, 589999,
APPR.			

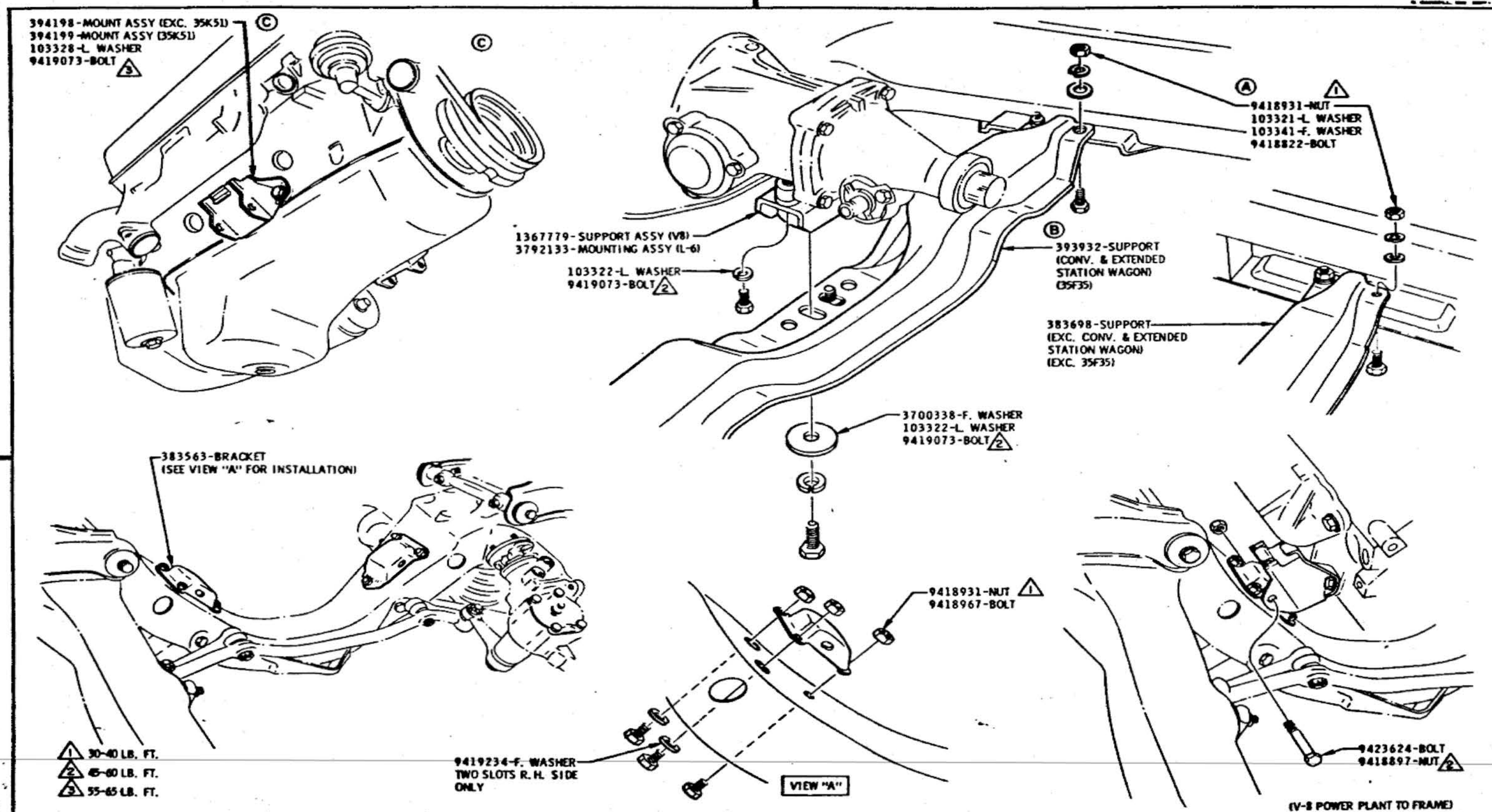

DATE	SYM	REVISION	DR.	CK.	DATE	SYM	REVISION	DR.	CK.	DATE	SYM	REVISION	DR.	CK.
										9-24-65	C	WAS 383564 & 383466		
										7-20-65	B	WAS 383699 SUPPORT		
										6-25-65	A	WAS 102635-NUT		

INSTALLATION **ENGINE MISCELLANEOUS**

DATE MARCH 26, 1965
DR. BY W.C. MASON
CHECKED
APPR.
APPR.

FIRST USED 1966 — Oldsmobile GRAPHIC ILLUSTRATION

SERIES A — REV. — PAGE 6-3.1 — PART NO. 589998

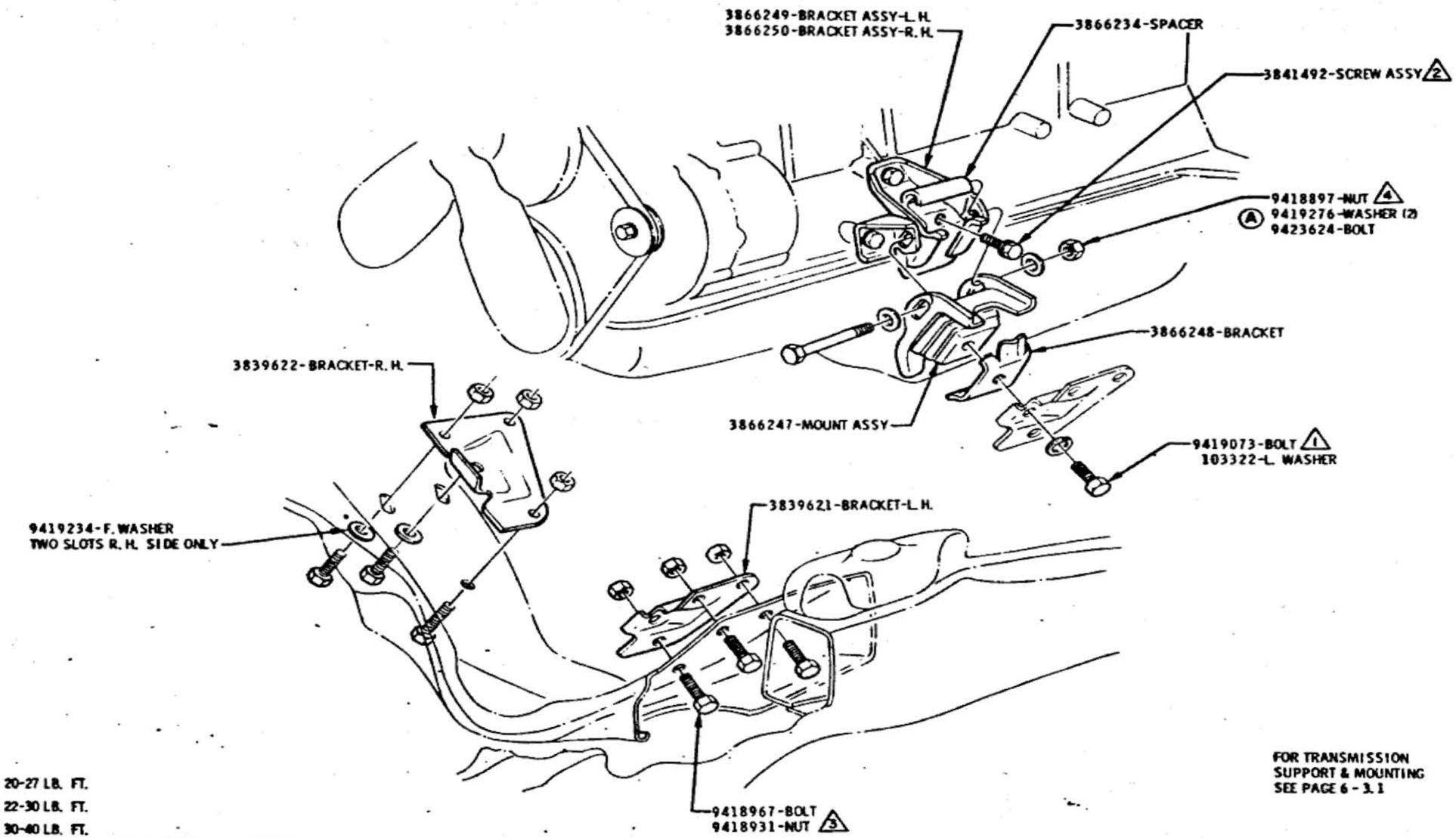

(1) 20-27 LB. FT.
(2) 22-30 LB. FT.
(3) 30-40 LB. FT.
(4) 45-60 LB. FT.

FOR TRANSMISSION SUPPORT & MOUNTING SEE PAGE 6 - 3.1

L-6 POWER PLANT TO FRAME

DATE	SYM	REVISION	DR.	CK.	DATE	SYM	REVISION	DR.	CK.	DATE	SYM	REVISION	DR.	CK.
										7-23-65	A	WAS 103342 WASHER		

INSTALLATION **ENGINE MISCELLANEOUS**

DATE MARCH 26, 1965 — FIRST USED 1966 — Oldsmobile Classic ILLUSTRATION — PAGE 6-3.2

DR. BY ED ROE — CHECKED M. Bernhart — APPR. — APPR. — SERIES A — REF. — PART NO. 589998

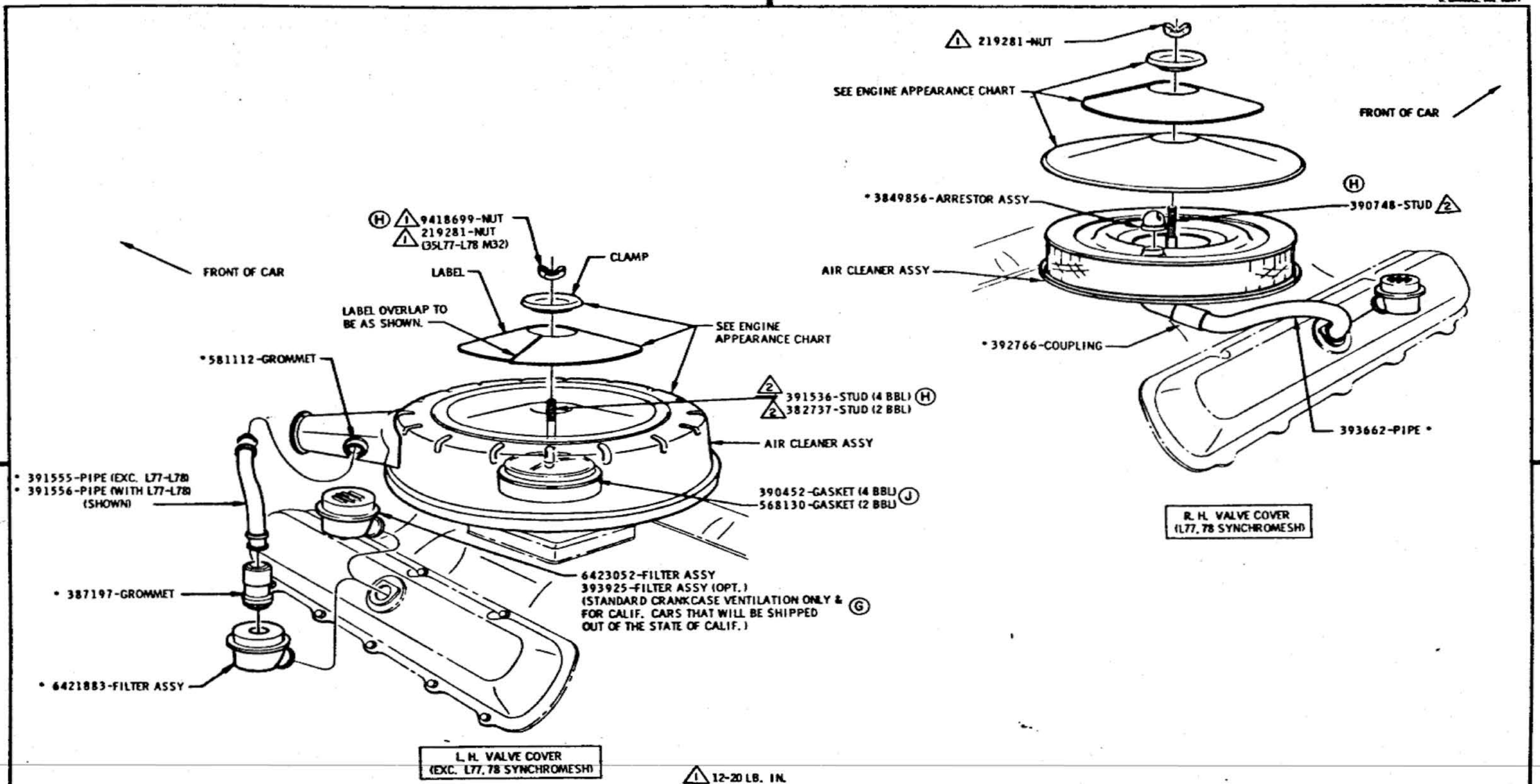

* THESE PARTS FOR CLOSED CIRCUIT CRANKCASE VENTILATION ONLY.

V8 CRANKCASE VENTILATION

DATE	SYM	REVISION	DR.	CK.	DATE	SYM	REVISION	DR.	CK.	DATE	SYM	REVISION	DR.	CK.
										8-3-65	E	VIEW REDRAWN & REVISED		
					2-3-66	J	NOTE ADDED			8-13-65	D	VIEW ADDED		
					12-13-65	H	NOTE ADDED			7-29-65	C	REDRAWN & REVISED		
					11-23-65	G	NOTE REVISED			6-11-65	B	WAS 578626 CLAMP		
					8-3-65	F	WAS 10-20 LB. IN.			6-1-65	A	WAS 583304 HOSE		

INSTALLATION — ENGINE MISCELLANEOUS

DATE MARCH 25, 1965
DR. BY Rodgers
CHECKED
APPR.

FIRST USED 1966 — Oldsmobile Service ILLUSTRATION

SERIES A — REF. — PAGE 6-3.3 — PART NO. 589998

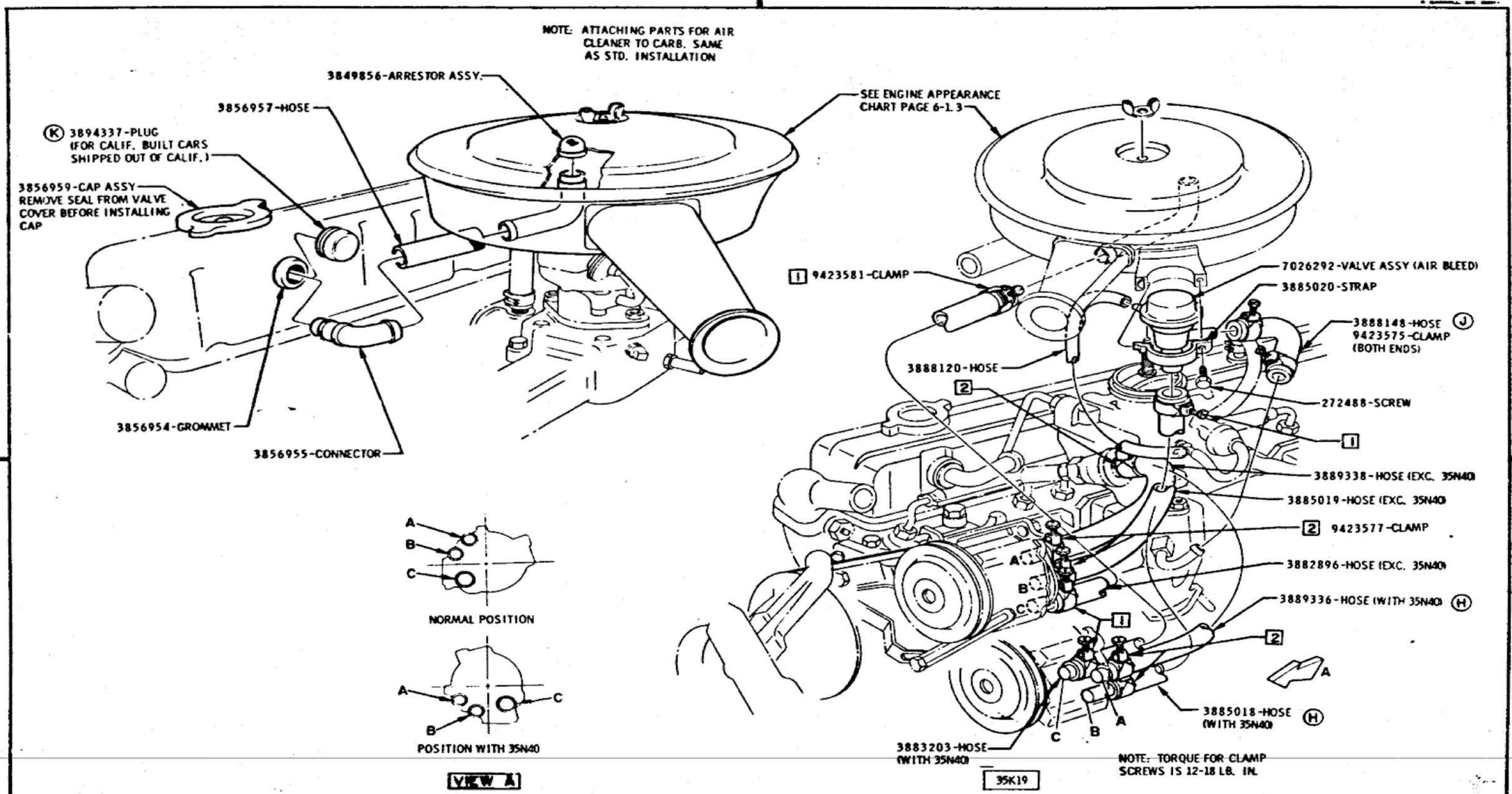

L-6 CRANKCASE VENTILATION & 35K19

DATE	SYM	REVISION	DR.	CK.	DATE	SYM	REVISION	DR.	CK.	DATE	SYM	REVISION	DR.	CK.
					12-1-65	K	WAS 393525			6-1-65	E	WAS 3885017-HOSE		
					9-1-65	J	WAS 3885023-HOSE			8-3-65	D	REDRAWN		
					9-1-65	H2	CALLOUTS-REVERSED			7-15-65	C	WAS 3813024-HOSE		
					9-1-65	G	TORQUE NOTE ADDED			7-8-65	B	WAS 7026192		
					8-1-65	F	WAS 3885016			5-26-65	A	VIEW ADDED		

INSTALLATION **ENGINE MISCELLANEOUS**

DATE MARCH 31, 1965
DR. BY W.E. MASON
CHECKED
APPR.
APPR.

FIRST USED 1966 — Oldsmobile Service ILLUSTRATION

SERIES A — REF. —

PAGE 6-3.4

PART NO. 589998

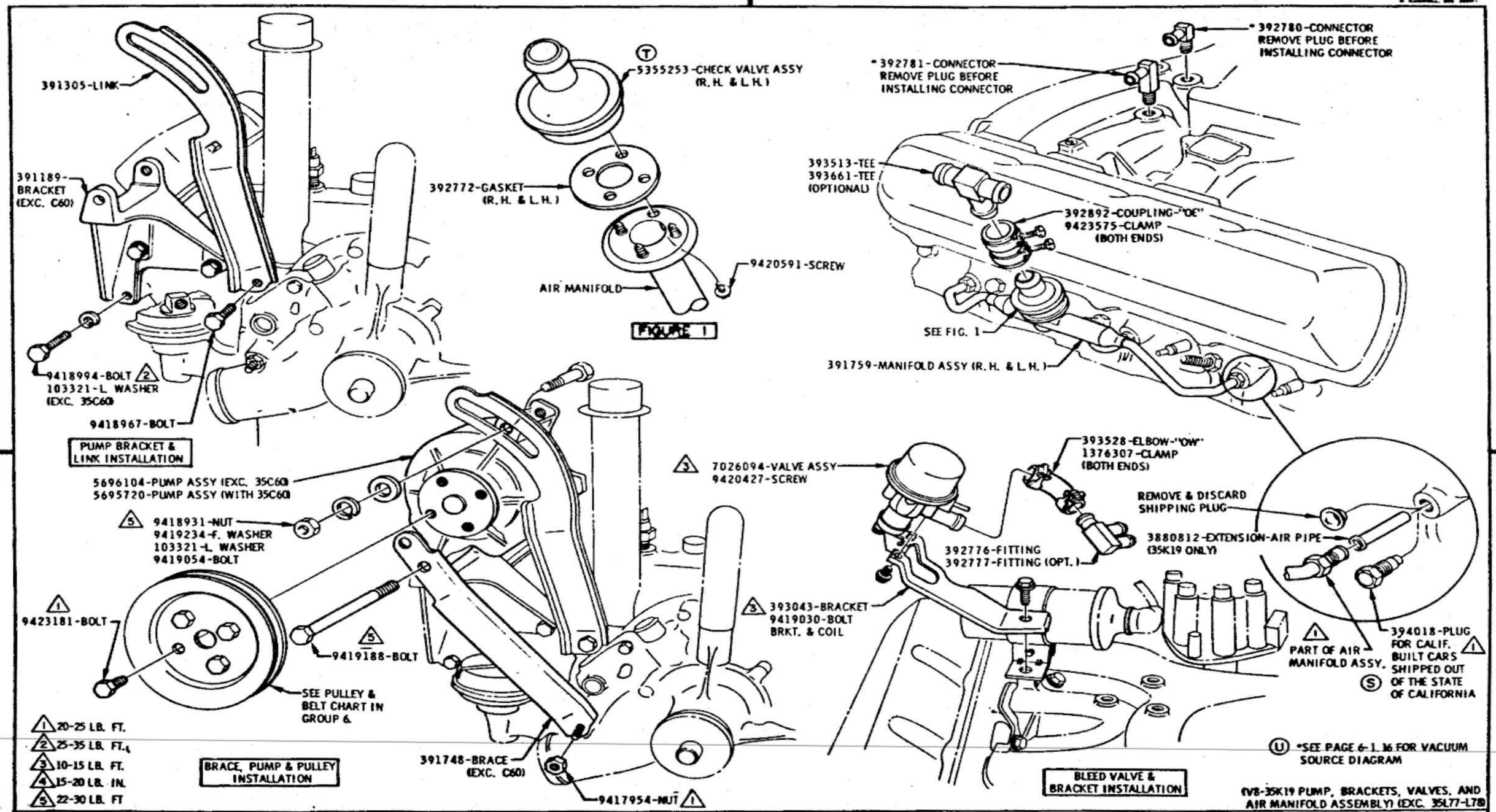

DATE	SYM	REVISION	DR.	CK.	DATE	SYM	REVISION	DR.	CK.	DATE	SYM	REVISION	DR.	CK.
										3-11-66	U	NOTE REVISED		
										2-17-66	T	WAS 5354541		
										1-10-66	S	TORQUE SPEC ADDED		
										12-2-65	R	BOLT ADDED		

INSTALLATION **ENGINE MISCELLANEOUS**

DATE APRIL 22, 1965
DR. BY W.E. MASON
CHECKED
APPR. C.F.H.
APPR.

FIRST USED 1966

Oldsmobile GRAPHIC ILLUSTRATION

SERIES A

REF.

PAGE 6-3.5

PART NO. 589998

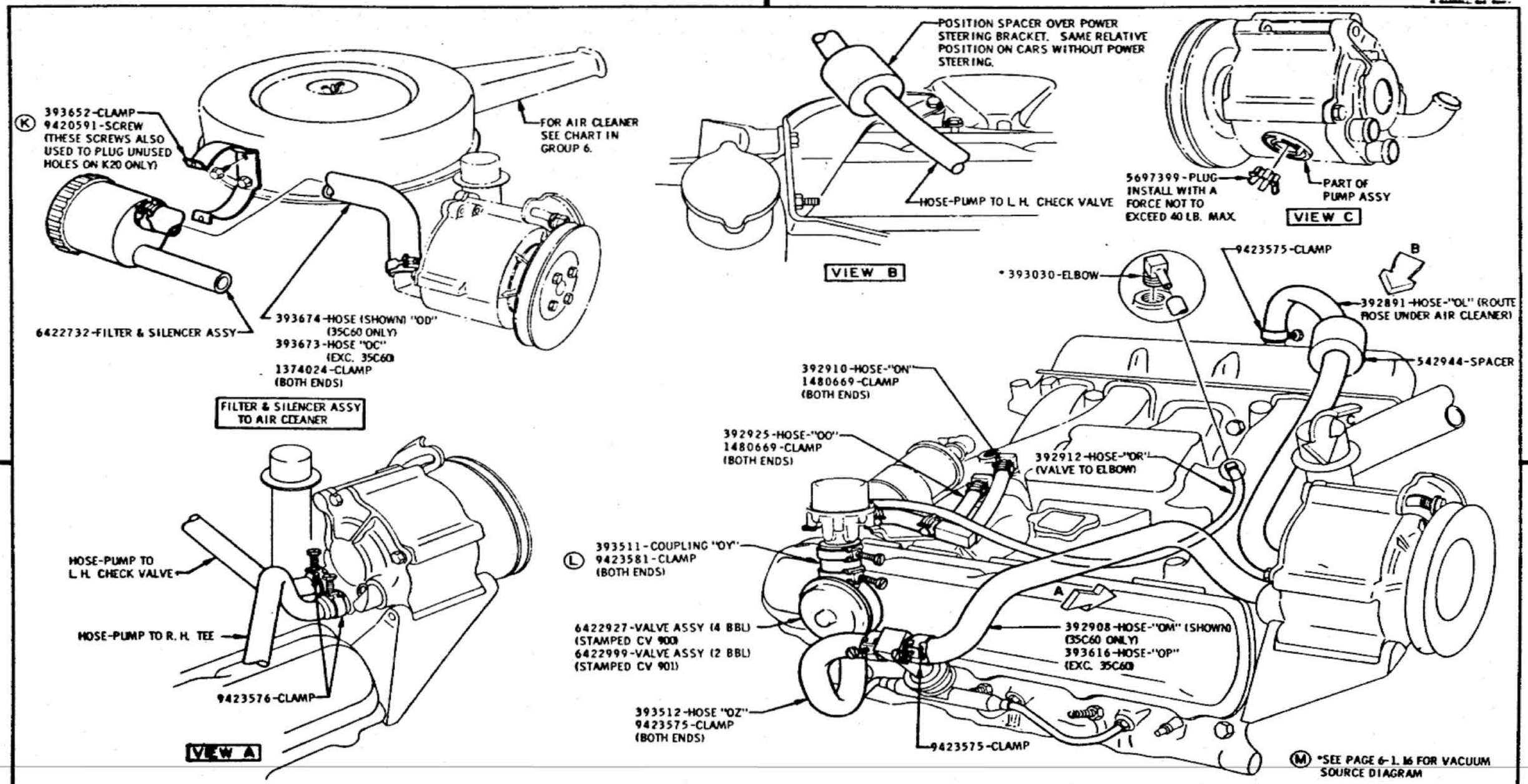

V8 35K19 HOSE ROUTING (EXC. 35L77-L78)

DATE	SYM	REVISION	DR.	CK.	DATE	SYM	REVISION	DR.	CK.	DATE	SYM	REVISION	DR.	CK.
					10-20-65	K	WAS 9423520-SCREW			7-29-65	E	CLAMPS REPOSITIONED		
					9-20-65	J	WAS 3829058 CLAMP			7-8-65	D	NOTE ADDED		
					8-17-65	H	NOTE REVISED			6-15-65	C	SPRING REMOVED		
3-11-66	M	NOTE REVISED			8-10-65	G	NOTE ADDED			6-8-65	B	BOARD REVISED & REDRAWN		
11-1-65	L	WAS 9423580-CLAMP			8-10-65	F	CODE ADDED			5-21-65	A	BOARD REVISED & REDRAWN		

INSTALLATION **ENGINE MISCELLANEOUS**

DATE APRIL 22, 1965
DR. BY W.E. MASON
CHECKED
APPR. C.F. King
APPR.

FIRST USED 1966
SERIES A
REF.

Oldsmobile ELECTRIC ILLUSTRATION

PAGE 6-3.6

PART NO. 589998

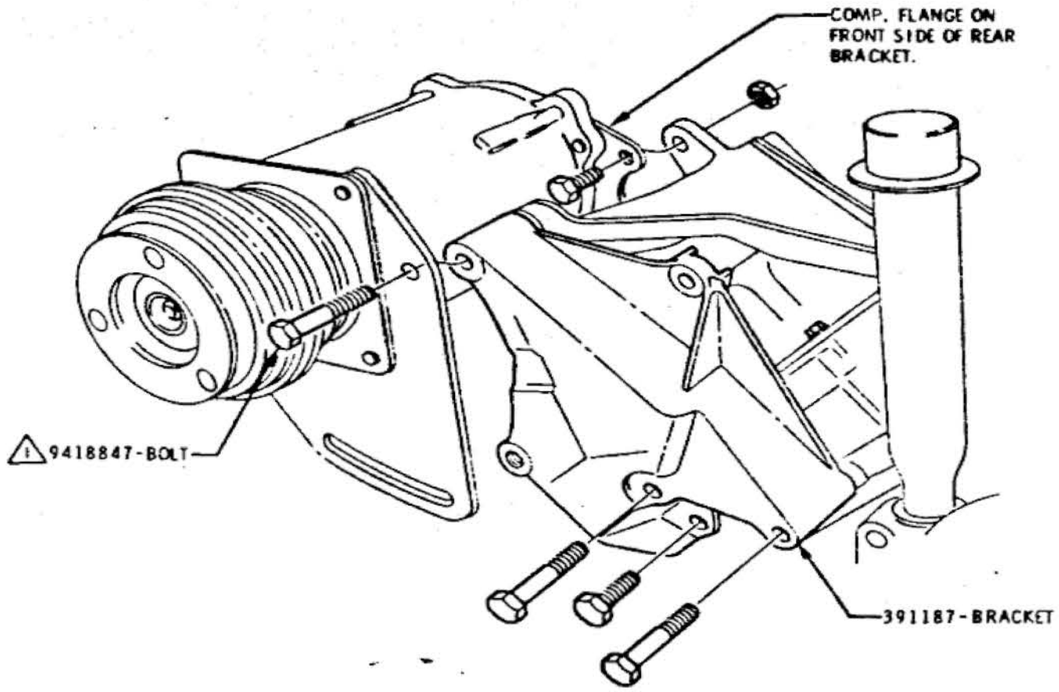

A/C COMPRESSOR MTG. WITH 35K19

COMPRESSOR INSTALLATION SAME AS SHOWN ON PAGE 6-2.7 EXCEPT AS SHOWN

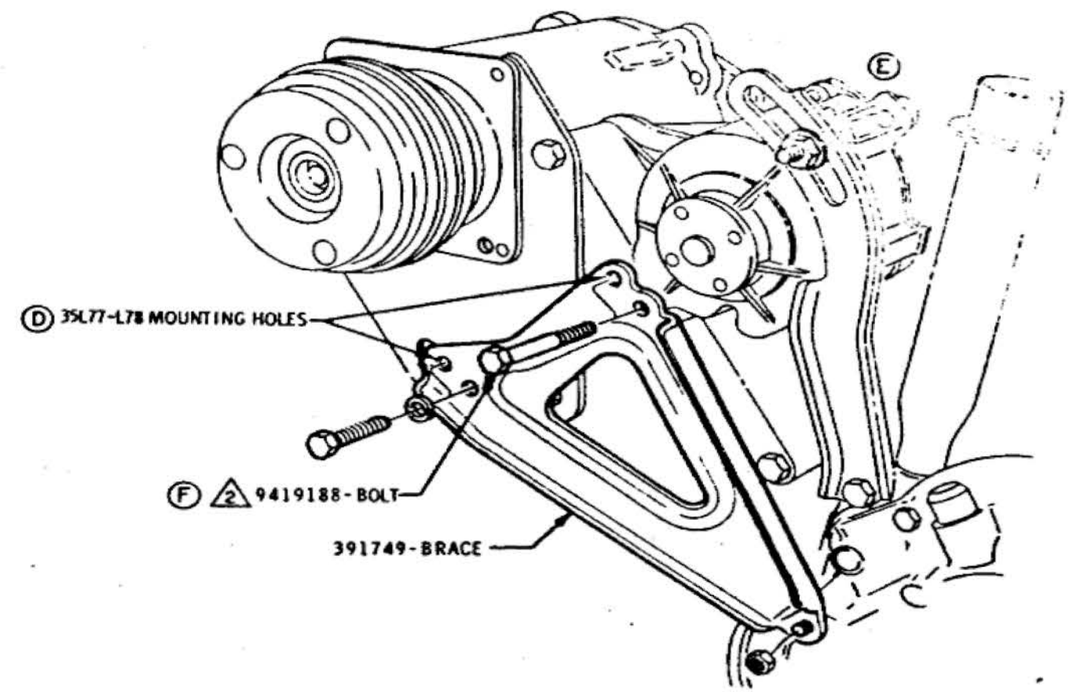

35K19 PUMP MTG WITH A/C COMPRESSOR

1 25-35 LB. FT.
2 22-30 LB. FT.

V8 A/C COMPRESSOR WITH 35K19

DATE	SYM	REVISION	DR.	CK.	DATE	SYM	REVISION	DR.	CK.	DATE	SYM	REVISION	DR.	CK.
										9-2-65	E	BACKGROUND REVISED		
										8-6-65	D	NOTE ADDED		
										7-30-65	C	NOTE REMOVED		
										7-30-65	B	NOTE ADDED		
					10-28-65	F	WAS 1 TORQUE			6-24-65	A	REVISED TO DETAIL		

INSTALLATION — ENGINE MISCELLANEOUS

DATE MAY 17, 1965
DR. BY R. GOODWIN
CHECKED
APPR.

FIRST USED 1966 — Oldsmobile Service ILLUSTRATION

SERIES A — REF.

PAGE 6-3.7

PART NO. 589998

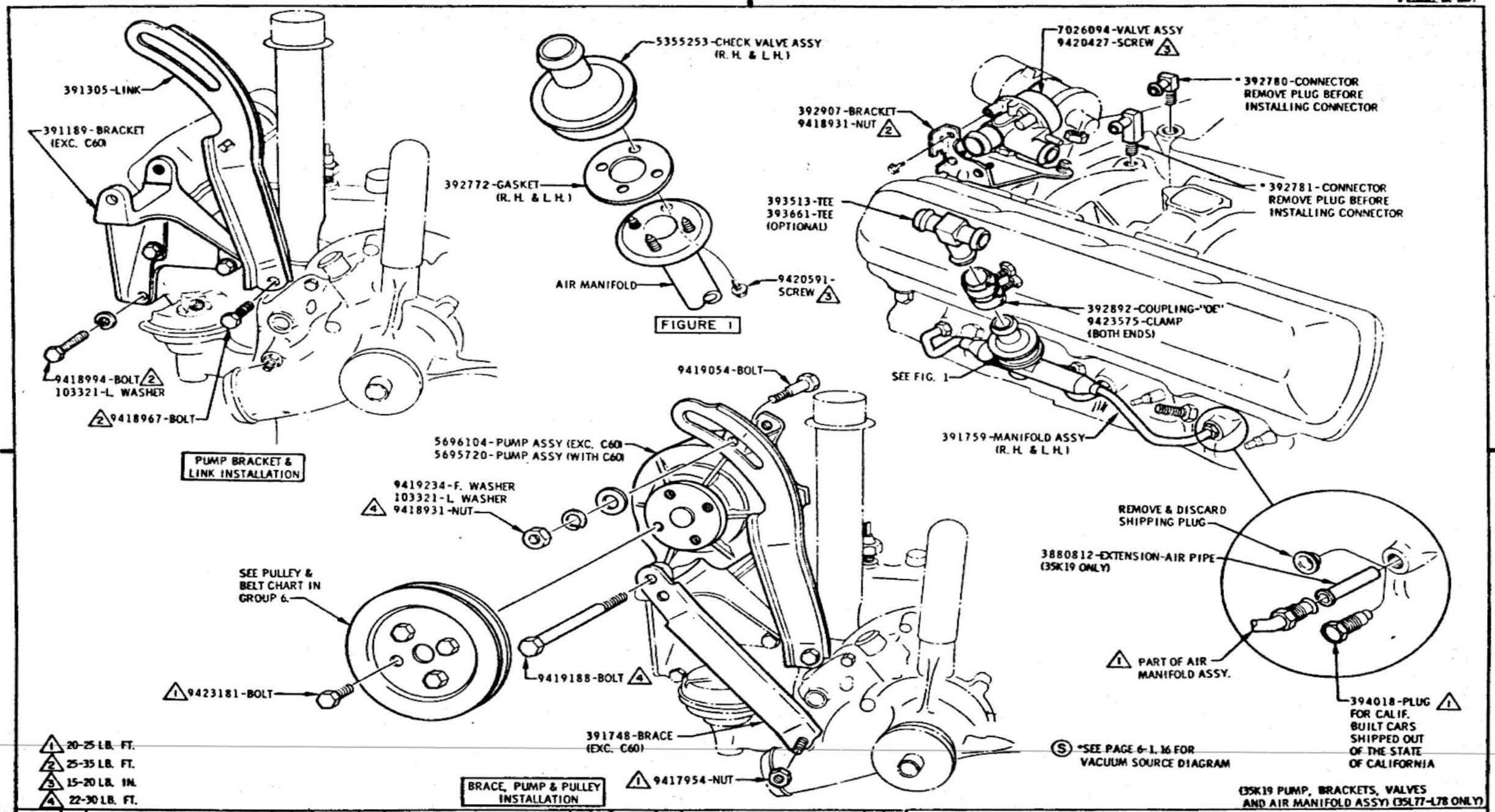

DATE	SYM	REVISION	DR.	CK.	DATE	SYM	REVISION	DR.	CK.	DATE	SYM	REVISION	DR.	CK.
										9-1-66	3	NOTE REVISED		

INSTALLATION	ENGINE MISCELLANEOUS		
DATE MAY 21, 1965	FIRST USED 1966	Oldsmobile Service & Illustration	PAGE 6-3.8
DR. BY W. E. MASON			
CHECKED	SERIES A	REF.	PART NO. 589998
APPR.			

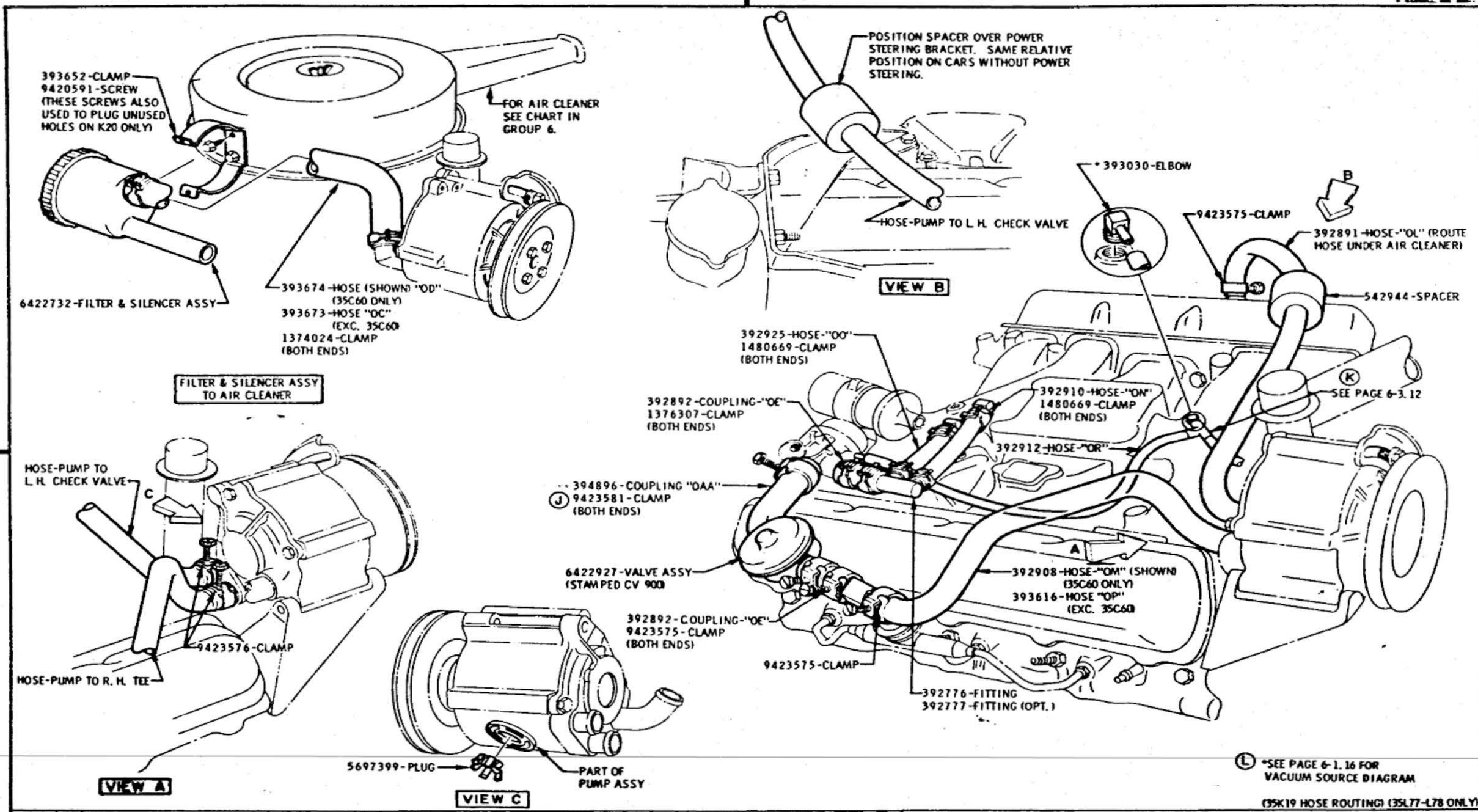

DATE	SYM	REVISION	DR.	CK.	DATE	SYM	REVISION	DR.	CK.	DATE	SYM	REVISION	DR.	CK.
					2-19-66	K	NOTE ADDED			8-17-65	E	NOTE REVISED		
					11-1-65	J	WAS 9423580-CLAMP			8-10-65	D	NOTE ADDED		
					11-1-65	H	WAS 393527-COUPLING			8-10-65	C	CODE ADDED		
					10-20-65	G	WAS 9423520-SCREW			7-29-65	B	CLAMPS REPOSITIONED		
3-11-66	L	NOTE REVISED			9-20-65	F	WAS 3929058-CLAMP			6-11-65	A	BOARD REVISED & REDRAWN		

INSTALLATION **ENGINE MISCELLANEOUS**

DATE MAY 21, 1965 | FIRST USED 1966 | Oldsmobile Service ILLUSTRATION | PAGE 6-3.9

DR. BY W.E. MASON | SERIES A | REV.

CHECKED | PART NO. 589998

APPR. C.F.K.

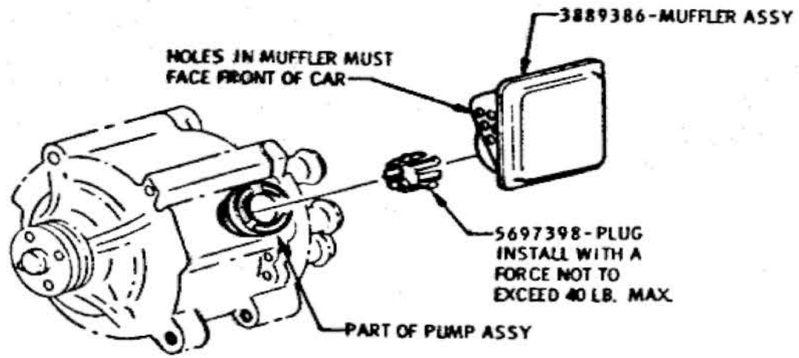

(M) PLUG AND MUFFLER TO AIR PUMP

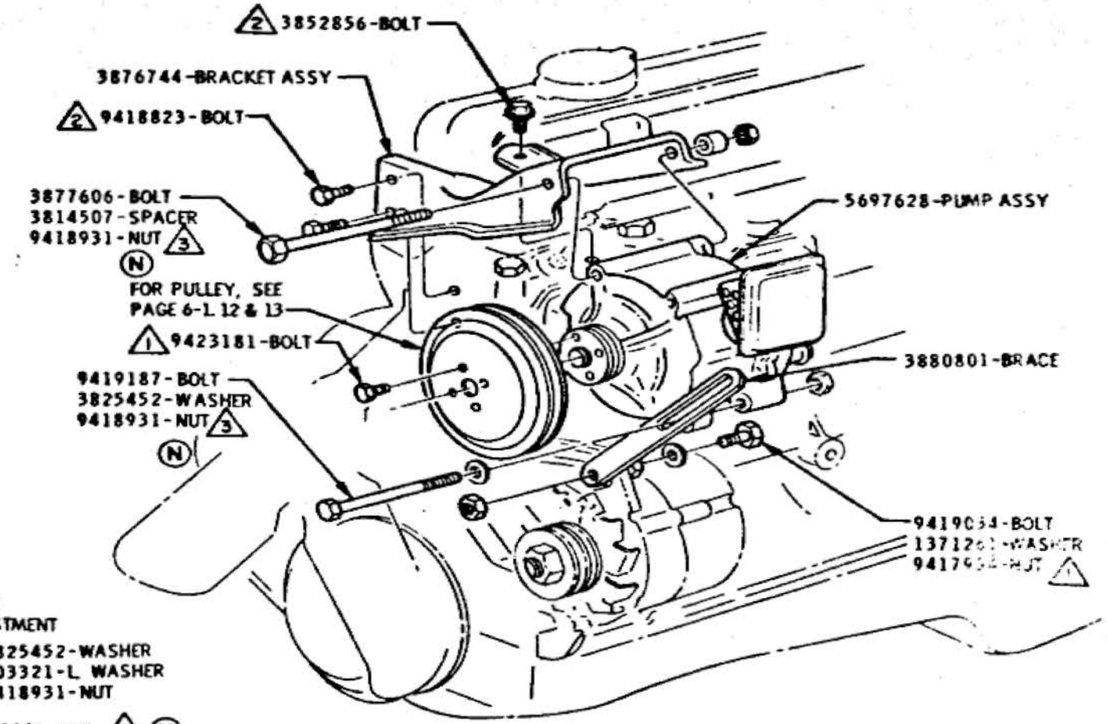

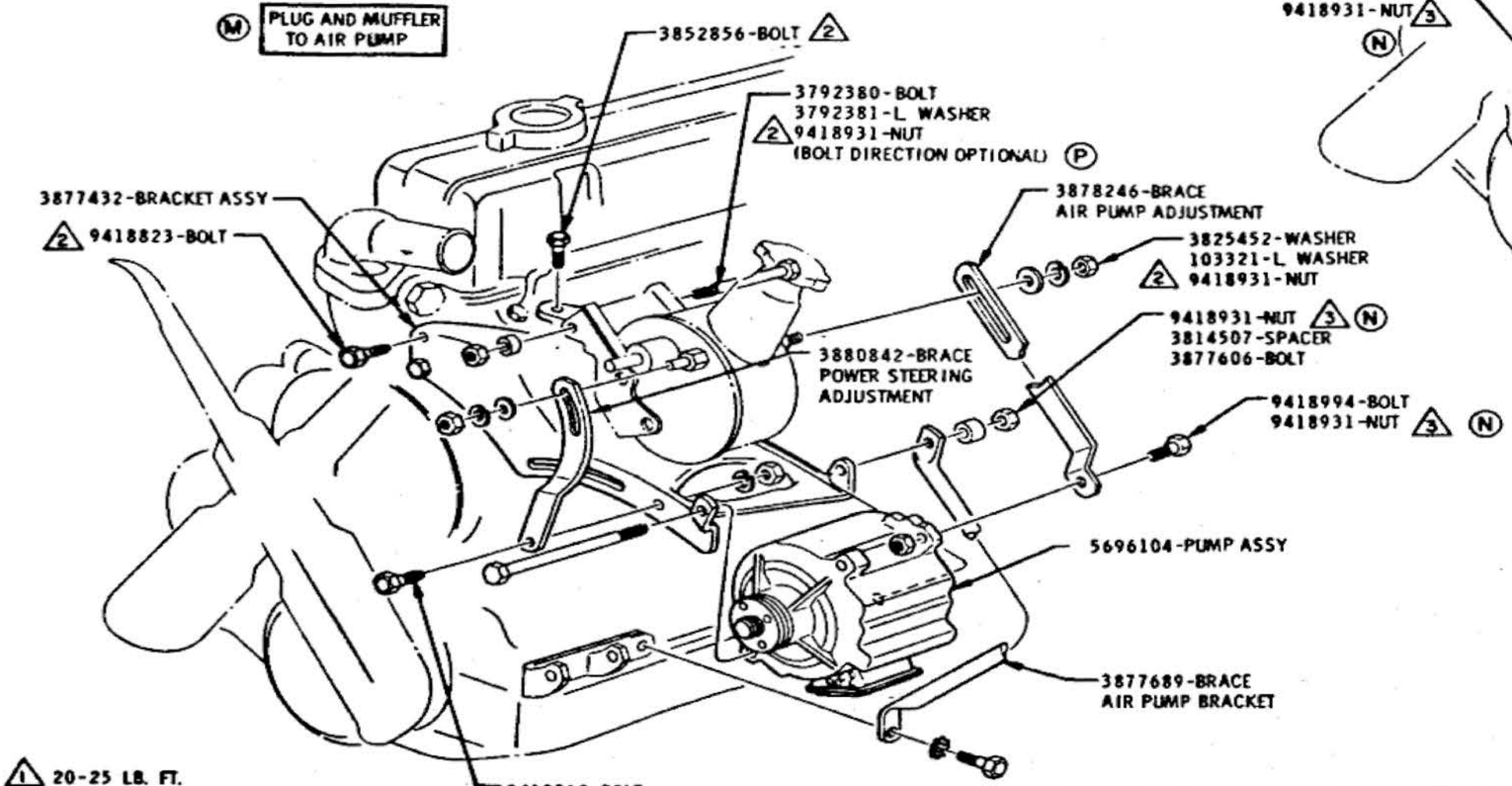

WITH POWER STEERING

WITHOUT POWER STEERING

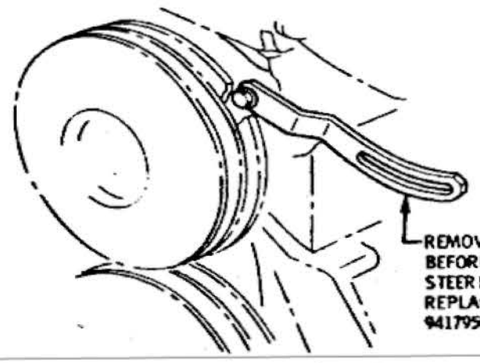

REMOVE BOLT AND BRACE BEFORE ASSEMBLY OF POWER STEERING PUMP BRACKET. REPLACE BOLT WITH 9417950-BOLT. (1)

(1) 20-25 LB. FT.
(2) 25-35 LB. FT.
(3) 22-30 LB. FT.

L-6 35K19 AIR PUMP

DATE	SYM	REVISION	DR.	CK.	DATE	SYM	REVISION	DR.	CK.	DATE	SYM	REVISION	DR.	CK.
					9-17-65	K	VIEW ADDED			7-7-65	E	NOTE ADDED		
11-3-65	P	BOLT DIRECTION ADDED			8-9-65	J	3825452 WAS 9418149			6-18-65	D	VIEW ADDED		
10-28-65	N	WING & TORQUE			7-30-65	H	TORQUE SPECS. ADDED			6-18-65	C	9419187 WAS 9419084		
9-27-65	M	VIEW REVISED & REDRAWN			7-30-65	G	5697628-PUMP ADDED			6-4-65	B	9418931 WAS 9118931		
9-20-65	L	WAS 5697399-PLUG			7-30-65	F	USAGE REVISED			6-4-65	A	3878246 WAS 3878146		

INSTALLATION **ENGINE MISCELLANEOUS**

DATE MAY 26, 1965
DR. BY ED J. ROE
CHECKED
APPR.
APPR.

FIRST USED 1966 — Oldsmobile Classic ILLUSTRATION

SERIES A — REV.

PAGE 6-3.10

PART NO. 589998

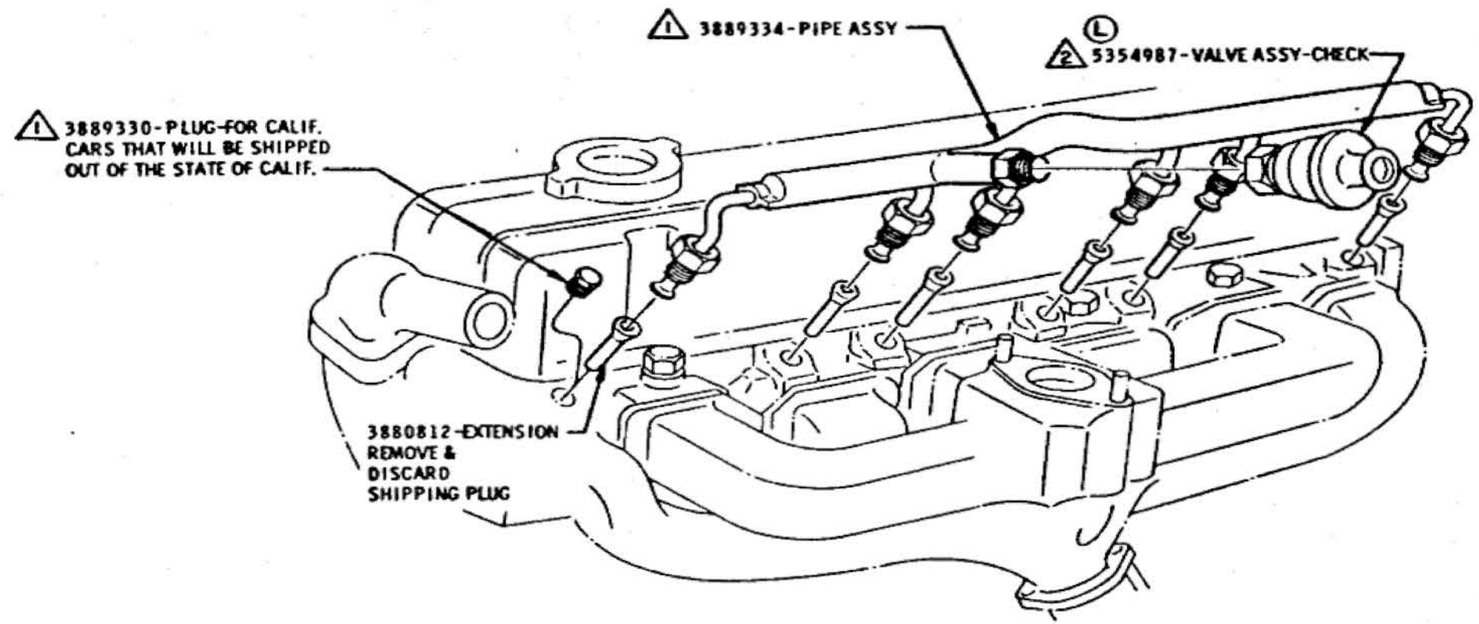

1 12-15 LB. FT.
2 14-20 LB. FT.

L-6 35K19 AIR PIPE & CHECK VALVE ASSY

DATE	SYM	REVISION	DR.	CK.	DATE	SYM	REVISION	DR.	CK.	DATE	SYM	REVISION	DR.	CK.
					1-20-66	K	TORQUE SPEC. ADDED			8-17-65	E	WAS 3885014 PIPE ASSY		
					9-17-65	J	VIEW REMOVED			7-8-65	D	REDRAWN		
					9-2-65	H	TORQUE SPEC. ADDED			6-18-65	C	WAS 103878		
					8-19-65	G	3880811 REMOVED			6-8-65	B	103878 WAS 444618		
2-22-66	L	WAS 5351635-VALVE ASSY			8-18-65	F	WAS 444618			6-8-65	A	NOTE REVISED		

INSTALLATION
DATE MAY 26, 1965
DR. BY ED J. ROE
CHECKED
APPR.

ENGINE MISCELLANEOUS

FIRST USED 1966 | ILLUSTRATION | PAGE 6-3.11 | SERIES A | REF. | PART NO. 589998

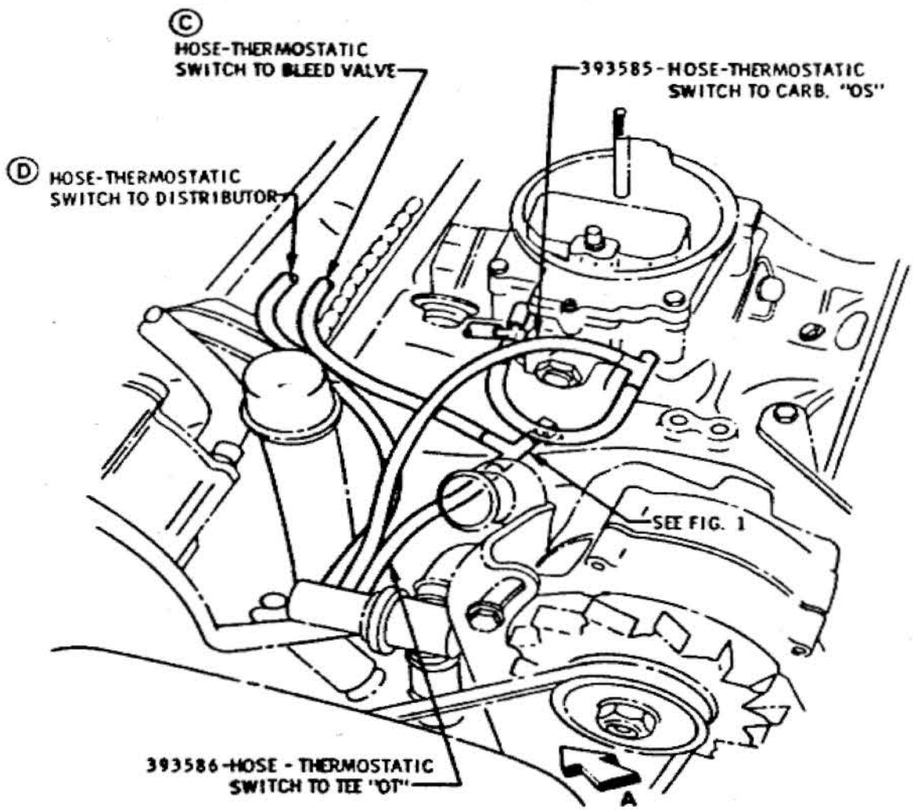

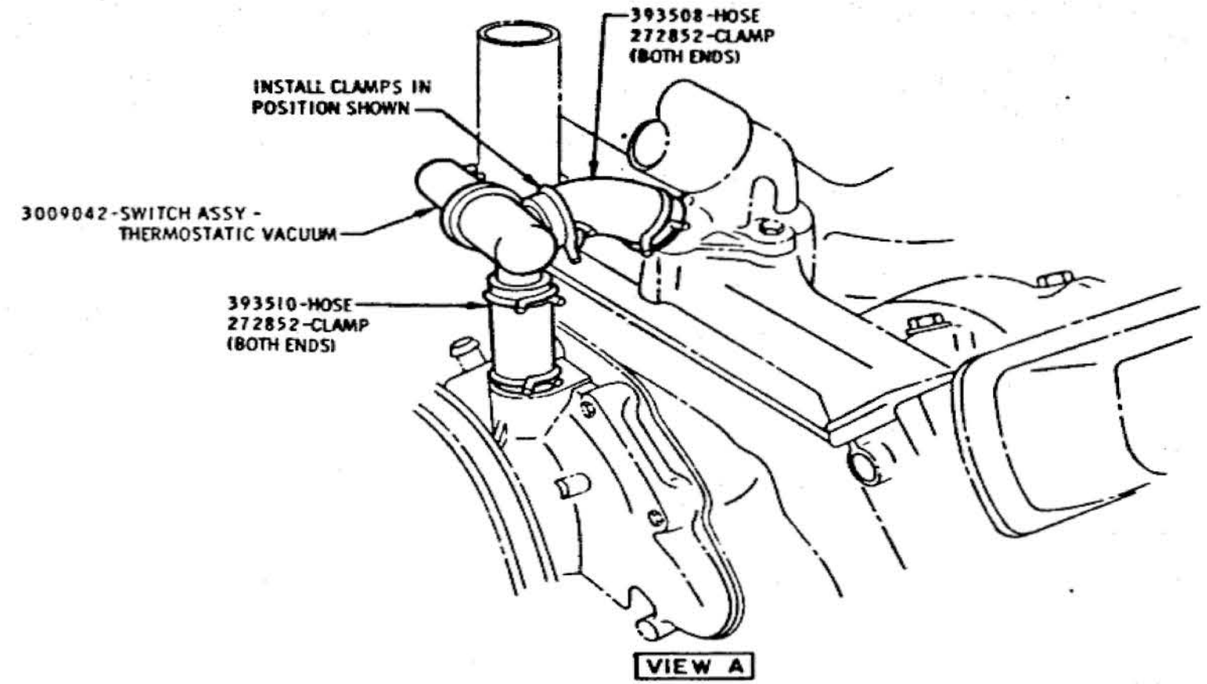

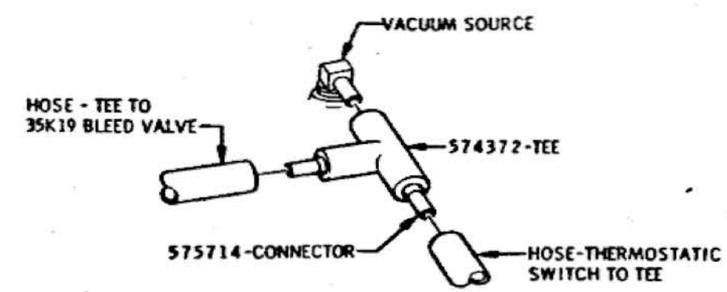

FIGURE 1

Ⓔ NOTE: SEE PAGE 6-L 16 FOR VACUUM SOURCE DIAGRAM

(35K19 THERMOSTATIC VACUUM SWITCH & HOSE ROUTING - WITH 35L77 - L78)

DATE	SYM	REVISION	DR.	CK.	DATE	SYM	REVISION	DR.	CK.	DATE	SYM	REVISION	DR.	CK.
										3-11-66	E	NOTE REVISED		
										3-11-66	D	PART NO. REMOVED		
										2-19-66	C	NOTE ADDED		
										1-11-66	B	HOSE ROUTING REVISED		
					3-15-66	F	NOTE CORRECTED			9-30-65	A	NOTE ADDED		

INSTALLATION — ENGINE MISCELLANEOUS

DATE AUGUST 17, 1965
DR. BY W.E. MASON
CHECKED
APPR.
APPR.

FIRST USED 1966 — Oldsmobile GRAPHIC ILLUSTRATION

SERIES A — REF. 35K19 — PAGE 6-3.12 — PART NO. 589998

OLDSMOBILE PRODUCT INFORMATION MANUAL

7-TRANSMISSION

GROUP 7-TRANSMISSION

392763 CHART-CLUTCH USAGE---------- 7-1.2
392629 CHART-MODULATOR HOSE USAGE---------- 7-1.3
392836 CHART-TRANSMISSION USAGE---------- 7-1.4

CLUTCH CONTROL----------7-2.1
CLUTCH CONTROL----------7-2.1A
SM 3 SPEED COLUMN SHIFT CONTROL----------7-2.2
V8 HEAVY DUTY 3 SPEED COLUMN SHIFT CONTROL----------7-2.3
3 SPEED FLOOR SHIFT AND FLOOR SHIFT LEVERS---------- 7-2.4
BACK-UP LAMP SWITCH FOR F. S. & 35M14---------- 7-2.4A
4 SPEED SYNCHROMESH FLOOR SHIFT---------- 7-2.5

JT SHIFT CONTROL---------- 7-3.1
JETAWAY AUTOMATIC----------7-3.2
COOLER PIPES AND FILLER TUBE---------- 7-3.3
CONSOLE JT SHIFT---------- 7-3.4
V8 MODULATOR PIPE---------- 7-3.5
L6 MODULATOR PIPE---------- 7-3.6

PART NO.	MODEL	EFFECTIVE PLATE PRESSURE (LBS.) AT 2800 RPM	FRICTION LAG	FACING	BOLT CIRCLE	COLOR CODE	PYL GROUP
3886126 PLATE ASSEMBLY	3300-3500 L6 SM & FS		.045 - .080 (.065 - .080 PREFERRED)	.135 X 9.12 (RM 3514) OPT (ASB MFG. CO. 157 - 80) WOVEN		OLIVE DRAB ON HUB	7B1B
(F) 3886134 COVER ASSEMBLY	3300-3500 L6 SM & FS	(1) BELLEVILLE SPRING (G) 1650-1850 LBS. TOTAL			10.96 DIA.	BLUE ON SPRING	7B1B
391254 PLATE ASSEMBLY	3407-3435-3469-3600-3807-3817-3839-3867-3869, 5200 V8 - SM & FS		.040 - .070	.135 X 10.40 (RM 969XR1) WOVEN		WHITE ON HUB	7B1B
3799139 COVER ASSEMBLY	3407-3435-3469-3600-3807-3817-3839-3867-3869, 5200 V8 - SM & FS	(1) BELLEVILLE SPRING 1900 - 2200 LBS. TOTAL			11.625 DIA.	ORANGE ON SPRING	7B1B
9774163 (OPT) COVER ASSEMBLY	3407-3435-3469-3600-3807-3817-3839-3867-3869, 5200 V8 - SM & FS	(1) BELLEVILLE SPRING 1900 - 2200 LBS. TOTAL			11.625 DIA.	ORANGE ON SPRING YELLOW ON LUG FOR PRESSURE PLATE	7B1B
9779392- PLATE ASSEMBLY	3455-3465-3855-3865 V8 - SM & FS		.025 - .045 (.035 DESIRED)	.135 X 11.00 & .150 X 11.00 (ASB MFG. CO. 157-80) WOVEN		YELLOW ON RETAINER PLATE	7B1B
(J) (H) 3893236 COVER ASSEMBLY	3455-3465-3855-3865 V8 - SM & FS	(1) BELLEVILLE SPRING 2450 - 2750 LBS. TOTAL BENT FINGER			12.625 DIA.	WHITE ON SPRING	7B1B
9779392- PLATE ASSEMBLY	3407-3435-3469-3600-3807-3817-3839-3867-3869 V8 - SM & FS HEAVY DUTY		.025 - .045 (.035 DESIRED)	.135 x 11.00 & .150 x 11.00 (ASB MFG CO 157-80) WOVEN		YELLOW ON RETAINER PLATE	35M01
(J) (H) 3893236 COVER ASSEMBLY	3407-3435-3469-3600-3807-3817-3839-3867-3869 V8 - SM & FS HEAVY DUTY	(1) BELLEVILLE SPRING 2450 - 2750 LBS. TOTAL BENT FINGER			12.625 DIA.	WHITE ON SPRING	35M01
9779392 PLATE ASSEMBLY	5400 5600 - 5800 - SM & FS		.025 - .045 (.035 DESIRED)	.135 X 11.00 & .150 X 11.00 (ASB MFG. CO. 157 - 80) WOVEN		YELLOW ON RETAINER PLATE	7B1B
(J) (H) 3893236 COVER ASSEMBLY	5400 5600-5800 SM & FS	(1) BELLEVILLE SPRING 2450 - 2750 LBS. TOTAL BENT FINGER			12.625 DIA.	WHITE ON SPRING	7B1B

DATE	SYM	REVISION	DR	CK	DATE	SYM	REVISION	DR	CK	DATE	SYM	REVISION	DR	CK
					1-17-66	K	PAGE NO. ADD. FOR P.I.M.			6-9-65	E	WAS 3828845	JP	FR
					11-19-65	J3	WAS 3884598			4-29-65	D2	WAS 3860259		
					4-15-65	H3	WAS 3860360	CG	FR	4-29-65	C2	5200 USAGE REMOVED	CG	JP
					6-9-65	G	1650-1850 WAS 1500-1800	JP	FR	4-29-65	B3	5200 USAGE ADDED	CG	JP
					6-9-65	F	WAS 3799034	JP	FR	3-26-65	A	JH5003 OPT. REMOVED		

CHART CLUTCH USAGE

DATE MARCH 8, 1965
DR. BY GARY CHANDELL
CHECKED
APPR.
APPR.

FIRST USED 1966

Oldsmobile Graphic Illustration

SERIES A-B-C

REF.

PAGE 7 - 1.2

PART NO. 392763

MODEL	CARBURETOR USAGE			HOSE-CARB. TO MODULATOR PIPE PART NO. *	HOSE COLOR CODE #	HOSE-MODULATOR PIPE TO TRANS. PART NO.
	STANDARD CAR WITH AUTO TRANS.	CALIF. CARS WITH EXHAUST CONTROL (K-19) & AUTO. TRANS.	CALIF. BUILT CARS FOR SALE OUTSIDE CALIF. (EXC. K-19) & AUTO. TRANS.			
94, 9600 (V-8)	4 BBL			392613	GREEN	1363863
		4 BBL		392614	WHITE	
			N. A.			
52, 54, 5600 84, 8600 34, 36, 3800 (V-8)	4 BBL			392616	RED	1363863
	2 BBL			392616	RED	
		4 BBL		392617	BLUE	
		2 BBL		392617	BLUE	
			4 BBL	392616	RED	
			2 BBL	392614	WHITE	
33, 3500 (L-6)	1 BBL					1363863
		1 BBL				
			1 BBL			

* FOR HOSE DETAIL, SEE 392612

DATE	SYM	REVISION	DR.	CK.	DATE	SYM	REVISION	DR.	CK.	DATE	SYM	REVISION	DR.	CK.
										3-9-65	A	PART NO. REVISED	GB	CA

CHART MODULATOR HOSE USAGE

DATE FEB. 22, 1965
DR. BY DALE GRAY
CHECKED N. PAGE
APPR.
APPR.

FIRST USED 1966

Oldsmobile Graphic Illustration

SERIES A-B-C-E

REF.

PAGE 7-L3

PART NO. 392629

OLDSMOBILE DIVISION GENERAL MOTORS CORPORATION LANSING — MICHIGAN

PART NUMBER	IDENTIFICATION	SERIES	RELEASE GROUP	SPEEDOMETER DRIVE GEAR	LOCATION OF IDENTIFICATION
		FULLY SYNCHRONIZED 3 SPEED			
3860040	QP	3300, 3500 (L-6 COLUMN SHIFT)	7B1	8 TOOTH	1" HIGH LETTERS ON R.H. SIDE OF CASE
3860097	RJ	3400, 3600, 3800 (V-8 COLUMN SHIFT)	7B1	8 TOOTH	
9777226	DB	3400, 3600, 3800 (V-8 HEAVY DUTY FLOOR SHIFT)	M-14	8 TOOTH	2" HIGH LETTERS ON R.H. SIDE OF EXTENSION
9777226	DB	3407, 3617, 3807, 17, 67 (V-8 HEAVY DUTY COLUMN SHIFT)	M-13	8 TOOTH	
9781076	DA	5200, 5400, 5600, 5800 (V-8 COLUMN SHIFT)	7B1	8 TOOTH	
		FULLY SYNCHRONIZED 4 SPEED			
(R) 3890534	HP	3300, 3400, 3500, 3600, 3800 (FLOOR SHIFT-WIDE RATIO)	M-20	8 TOOTH (30 PITCH)	1" HIGH LETTER ON R.H. SIDE OF CASE
3877459	HF	3300, 3400, 3500, 3600, 3800 (FLOOR SHIFT-CLOSE RATIO)	M-21	8 TOOTH (30 PITCH)	
392598	XN	5200, 5400, 5600, 5800 (FLOOR SHIFT-WIDE RATIO)	M-20	NONE	
		JETAWAY TRANSMISSION (2 SPEED)			
1375459	LC	3300, 3500 (L-6 FIXED STATOR)	M-31	17 TOOTH	1" HIGH LETTERS ON CONVERTOR HOUSING
1377702	ML	3400, 3600, 3855, 65 (V-8 VARIABLE STATOR-ALL 2 BBL)	M-33	17 TOOTH	
1373413	MK	3400, 3600, 3800 (V-8 VARIABLE STATOR-ALL 4 BBL EXC. L-77 & L-78)	M-33	17 TOOTH	
1373416	NJ	3407, 69, 3617, 39, 69, 3807, 17, 19, 39, 69 (V-8 VARIABLE STATOR WITH L-77)	M-32	17 TOOTH	
1373416	NJ	3407, 3617, 3807, 17, 67 (V-8 VARIABLE STATOR WITH L-78)	M-32	17 TOOTH	
1373414	MT	5200 (V-8 VARIABLE STATOR-2 BBL STD. & L-65 & L-90 & 4 BBL L-74 & L-90)	M-33	NONE	
		TURBO HYDRAMATIC TRANSMISSION (3 SPEED VARIABLE STATOR)			
(M) 8624255	OB	(P) 5600, 5800, 8400, 8600 (V-8 2 BBL EXC. L-65, L-90) (ALL 4 BBL EXC. L-75, L-77)	7B3, M-40	NONE	2" HIGH LETTERS ON CONVERTOR HOUSING
8624265	OC	(P) 5600, 5800 (V-8 2 BBL WITH L-65, L-90)	M-40	NONE	
8624275	OD	5400 (V-8 4 BBL STARFIRE ENGINE)	M-40	NONE	
8624275	OD	5800, 8400, 8600 (V-8 WITH L-75)	M-40	NONE	
8624285	OE	5600, 5800 (V-8 WITH L-77)	M-41	NONE	
8624485	OF	5200 (V-8 2 BBL & 4 BBL) ALL	M-40	NONE	
8624285	OE	5400, 5600, 5800, 8400, 8600, 9860 (V-8 2 BBL & 4 BBL-ALL HEAVY DUTY)	M-41	NONE	
8625105	OJ	9400, 9600 (V-8 4 BBL)	7B3	14 TOOTH	NAME PLATE ON L.H. SIDE OF CONVERTOR HOUSING

(P), (N)

DATE	SYM	REVISION	DR.	CK.	DATE	SYM	REVISION	DR.	CK.	DATE	SYM	REVISION	DR.	CK.
8-25-65	R	3890534 WAS 3870357	WJ	FR	5-18-65	K	8624255 USAGE REMOVED	KW	Np	4-27-65	E	OP, BJ, XS, HF IDENT ADDED	KW	Np
7-19-65	P	EXPORT USAGE CLARIFIED	EK	Np	5-18-65	J	8624265 REMOVED	KW	Np	4-8-65	D	USAGE REVISED	GC	JF
6-25-65	N	EXPORT USAGE ADDED	CG	JF	5-18-65	H	8624245 REMOVED	KW	Np	4-8-65	C	1373415 REMOVED	GC	JF
6-25-65	M	8624265 ADDED	CG	JF	5-3-65	G	1377702 WAS 1372630	KW	Np	4-1-65	B	L-90 USAGE ADDED	GC	JF
5-18-65	L	L-76 USAGE REMOVED	KW	Np	4-27-65	F	8624485 ADDED	KW	Np	4-1-65	A	M-34 TRANS REMOVED	GC	JF

CHART **TRANSMISSION USAGE**

DATE MARCH 15, 1965
DR. BY GARY E. CRANDELL
CHECKED W.L. WEISS
APPR.
APPR.

FIRST USED 1966

Oldsmobile Service ILLUSTRATION

SERIES A-B-C-E

REF.

PAGE 7-L.4

PART NO. 392836

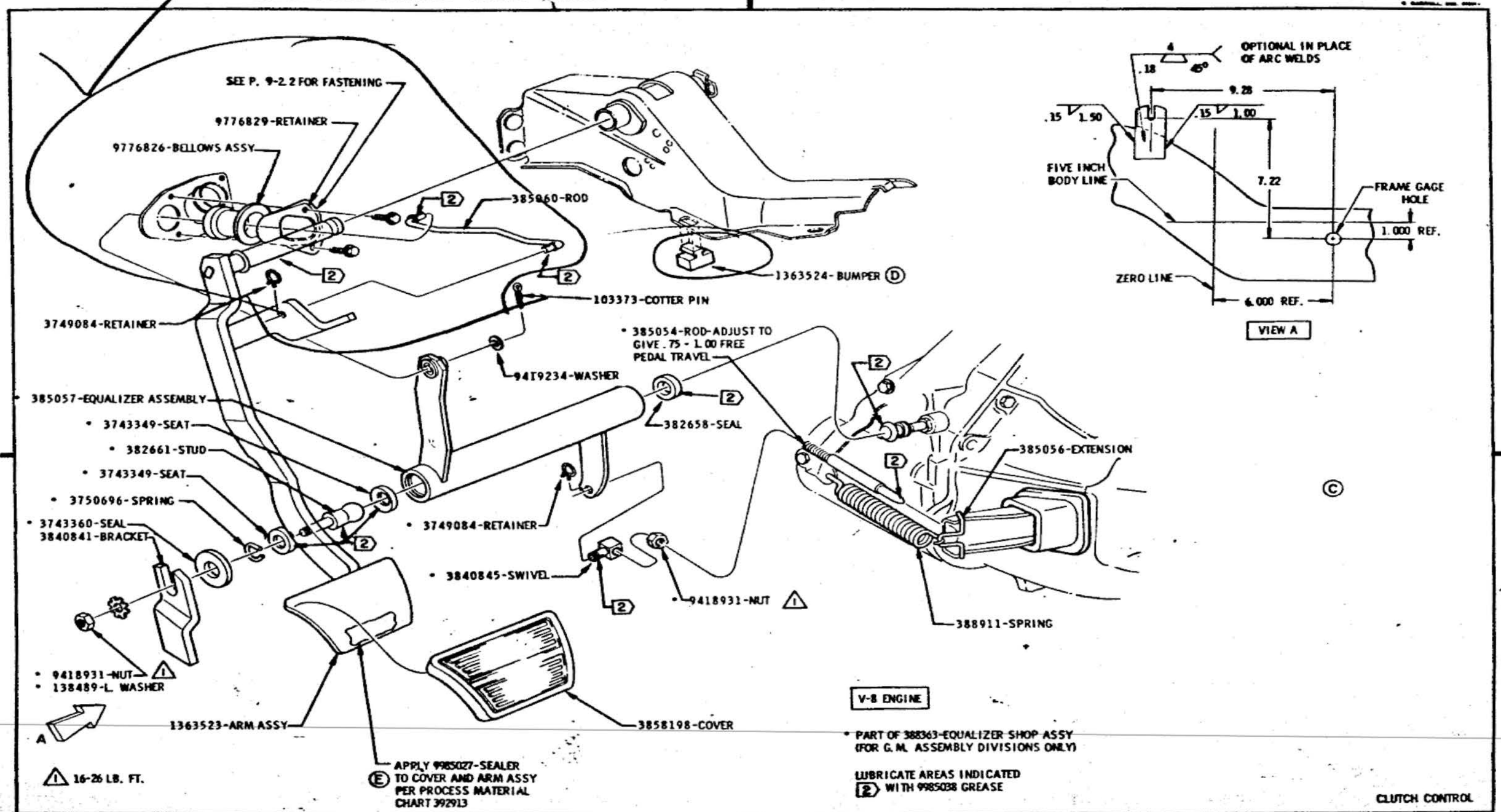

DATE	SYM	REVISION	DR.	CK.	DATE	SYM	REVISION	DR.	CK.	DATE	SYM	REVISION	DR.	CK.
										1-14-66	E	NOTE ADDED		
										10-11-65	D	WAS 1361714 - BUMPER		
										8-5-65	C	VIEW MOVED TO PAGE 7-2.1A		
										7-30-65	B	NOTE MOVED & REVISED		
										7-23-65	A	3841738-BOOT ADDED		

INSTALLATION — TRANSMISSION

DATE APRIL 7, 1965
DR. BY E.D. ROE
CHECKED
APPR. H. PAGE
APPR.

FIRST USED 1966 — Oldsmobile GRAPHIC ILLUSTRATION

SERIES A — REF. TR 5806, TR 3991

PAGE 7-2.1

PART NO. 589998

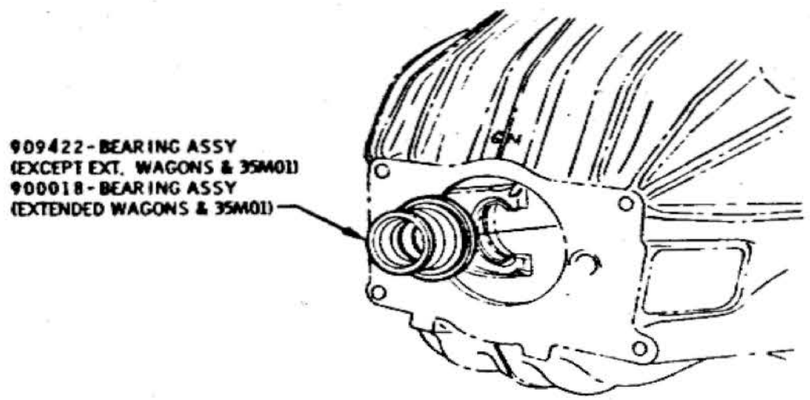

THROW-OUT BEARING INSTALLATION

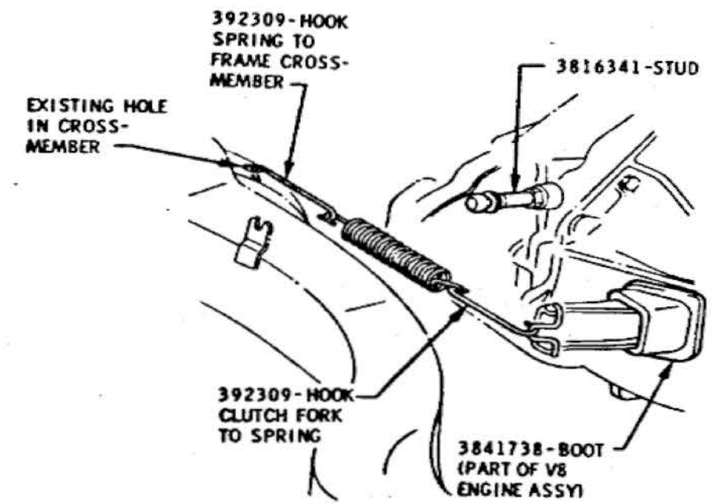

L-6 ENGINE

(SAME AS V-8 EXCEPT AS SHOWN)

CLUTCH CONTROL

DATE	SYM	REVISION	DR.	CK.	DATE	SYM	REVISION	DR.	CK.	DATE	SYM	REVISION	DR.	CK.

INSTALLATION **TRANSMISSION**

DATE AUGUST 9, 1965
DR. BY PAUL McKESSY
CHECKED M. Zornhart
APPR. H.T.E. Phler
APPR.

FIRST USED 1966 — Oldsmobile Graphic Illustration

SERIES A — REF.

PAGE 7-2.1A

PART NO. 589998

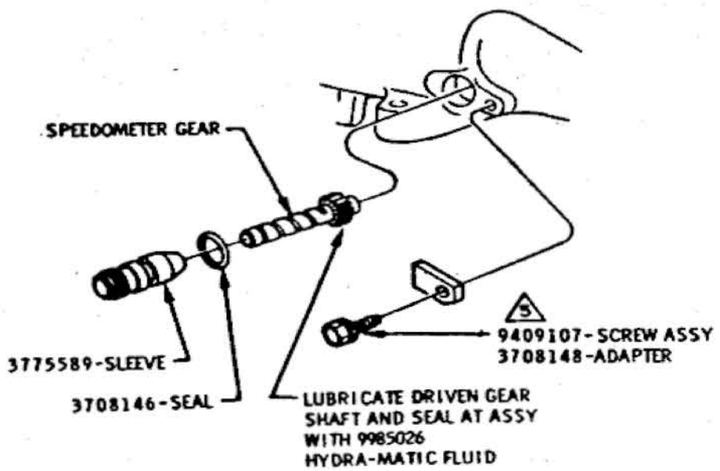

FOR SPEEDOMETER GEARS SEE USAGE CHART, PAGE 0-1.10, 0-1.11, 0-1.12

VIEW A

TYPICAL INSTALLATION OF SPEEDOMETER GEAR

FIGURE 1

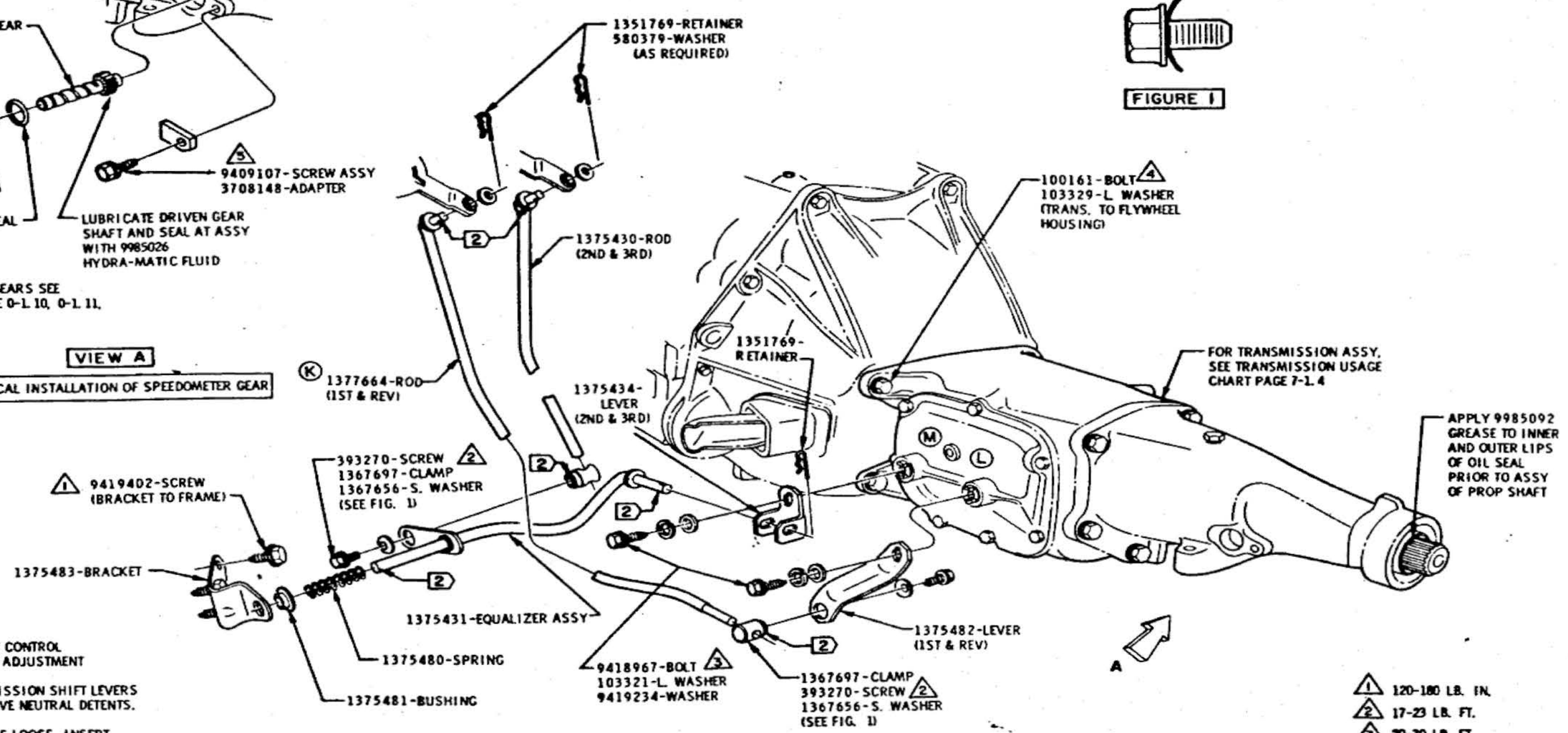

SHIFT CONTROL LINKAGE ADJUSTMENT

1. SET TRANSMISSION SHIFT LEVERS IN RESPECTIVE NEUTRAL DETENTS.
2. WITH CLAMPS LOOSE, INSERT TOOL WITH 3/16" DIA. GAGE PIN IN STEERING COLUMN SHIFT LEVERS.
3. TIGHTEN 393270-SCREWS ON CLAMPS ON LOWER END OF SHIFT RODS.

FILL THRU FILLER HOLE ON R. H. SIDE OF TRANS. WITH 3.55 PINTS OF 9985133 OR 9985044 (OPT.) OIL. THEN REINSTALL FILLER PLUG TO 120-180 LB. IN.

LUBRICATE AREAS INDICATED 2 WITH 9985038 GREASE

1 120-180 LB. IN.
2 17-23 LB. FT.
3 20-30 LB. FT.
4 60-70 LB. FT.
5 48-84 LB. IN.

SM 3 SPEED COLUMN SHIFT CONTROL

DATE	SYM	REVISION	DR.	CK.	DATE	SYM	REVISION	DR.	CK.	DATE	SYM	REVISION	DR.	CK.
					10-7-65	K	WAS 394008			7-2-65	E	VIEW ADDED		
					9-20-65	J	FIGURE 1 ADDED			6-11-65	D	WAS 1367657 SCREW		
					9-1-65	H	9776458-PLUG CANCELLED			6-11-65	C	FILL NOTE REVISED		
4-11-66	M	1377404-CANCELLED			8-17-65	G	WAS 3790084-RETAINER			6-11-65	B	PART NO. ADDED		
3-8-66	L	1377404 WASHER ADDED			8-4-65	F	WAS 1375429-ROD			6-3-65	A			

INSTALLATION **TRANSMISSION**

DATE APRIL 6, 1965
DR. BY ED ROE
CHECKED
APPR. R.C. STAMPEL

FIRST USED 1966

Oldsmobile Service ILLUSTRATION

SERIES A

REV. 7A
BL-1562

PAGE 7-2.2

PART NO. 589998

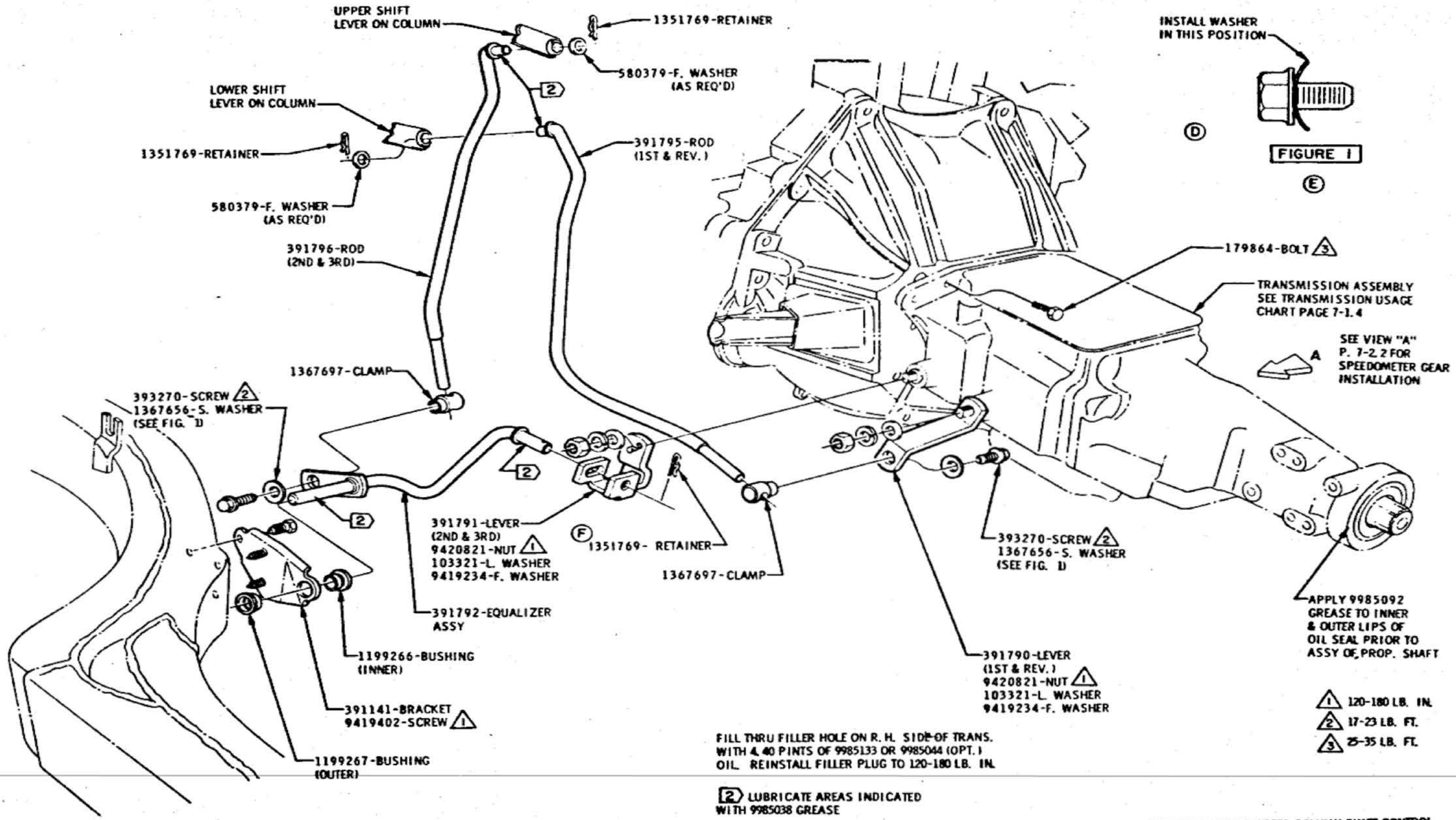

V8 HEAVY DUTY 3 SPEED COLUMN SHIFT CONTROL

DATE	SYM	REVISION	DR.	CK.	DATE	SYM	REVISION	DR.	CK.	DATE	SYM	REVISION	DR.	CK.
										9-20-65	E	FIGURE 1 ADDED		
										9-15-65	D	9776456-PLUG CANCELLED		
										7-26-65	C	NOTE ADDED		
										6-9-65	B	9985044 OPT. ADDED		
					2-28-66	F	WAS 394084 RETAINER			6-9-65	A	FASTENINGS REVISED		

INSTALLATION — TRANSMISSION

DATE APRIL 5, 1965
DR. BY MODERN
CHECKED
APPR. R. C. STEMPEL
APPR.

FIRST USED 1966 — Oldsmobile Service ILLUSTRATION — SERIES A — REF. M13 TR5630

PAGE 7-2.3

PART NO. 589998

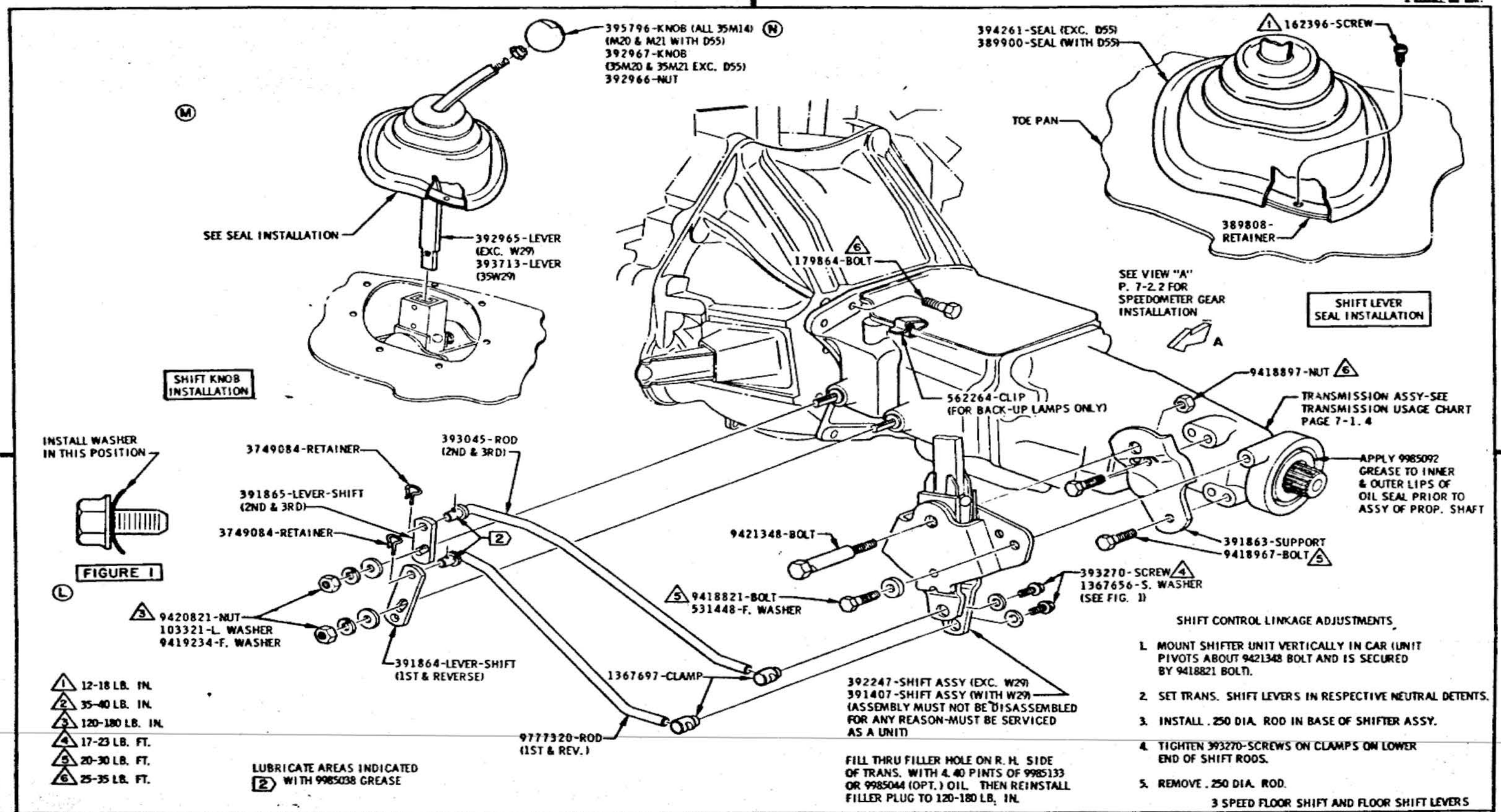

DATE	SYM	REVISION	DR.	CK.	DATE	SYM	REVISION	DR.	CK.	DATE	SYM	REVISION	DR.	CK.
					9-15-65	K	9776456-PLUG CANCELLED			6-25-65	E	NOS. REMOVED		
					9-2-65	J	WAS 393539-SEAL			6-16-65	D	NOTE ADDED		
1-20-66	N	WAS 391409			8-25-65	H	NOTE REVISED			6-8-65	C	BOARD REVISED & REDRAWN		
1-20-66	M	VIEW REMOVED			7-26-65	G	NOTE ADDED			5-12-65	B	WAS 9777321-ROD		
9-20-65	L	FIGURE 1 ADDED			7-26-65	F	PART NO'S ADDED			4-20-65	A	VIEW ADDED		

INSTALLATION	**TRANSMISSION**	
DATE APRIL 2, 1965	FIRST USED 1966	PAGE 7-2.4
DR. BY ED ROE	Oldsmobile GRAPHIC ILLUSTRATION	
CHECKED	SERIES A	REF. TR-5495 35M14
APPR. R. C. STEMPEL		PART NO. 589998

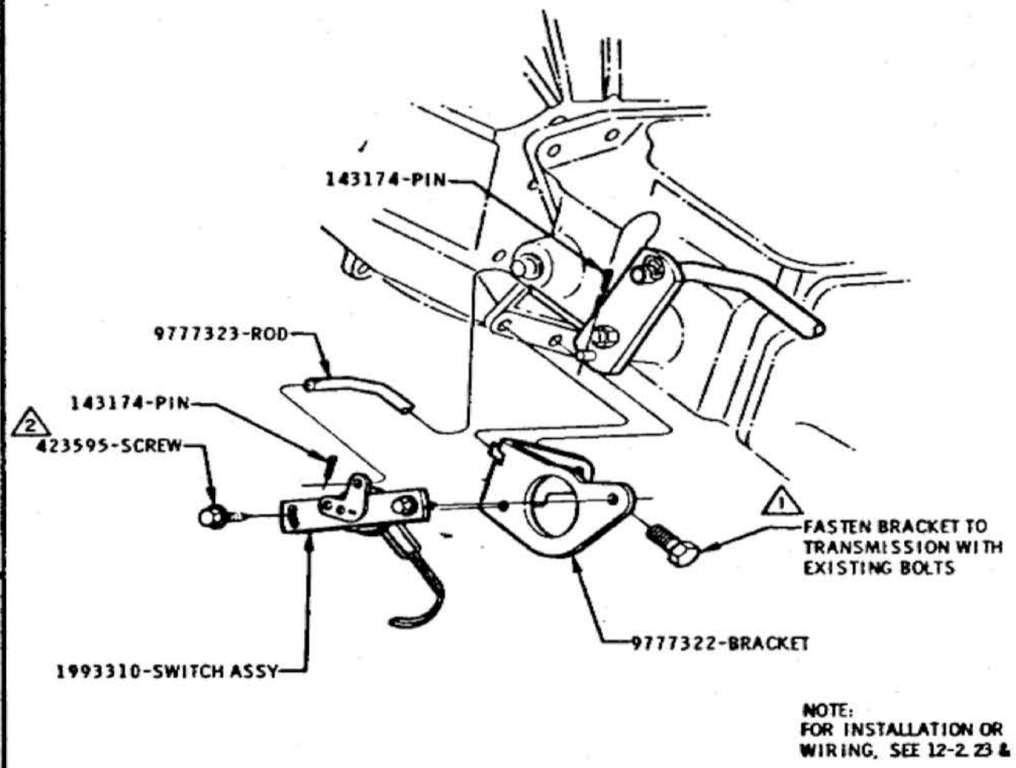

NOTE:
FOR INSTALLATION OR WIRING, SEE 12-2, 23 & 24

INSTALLATION OF BACK-UP LAMP SWITCH TO THREE SPEED TRANS. WITH M14

2 12-18 LB. IN.
1 25-35 LB. FT.

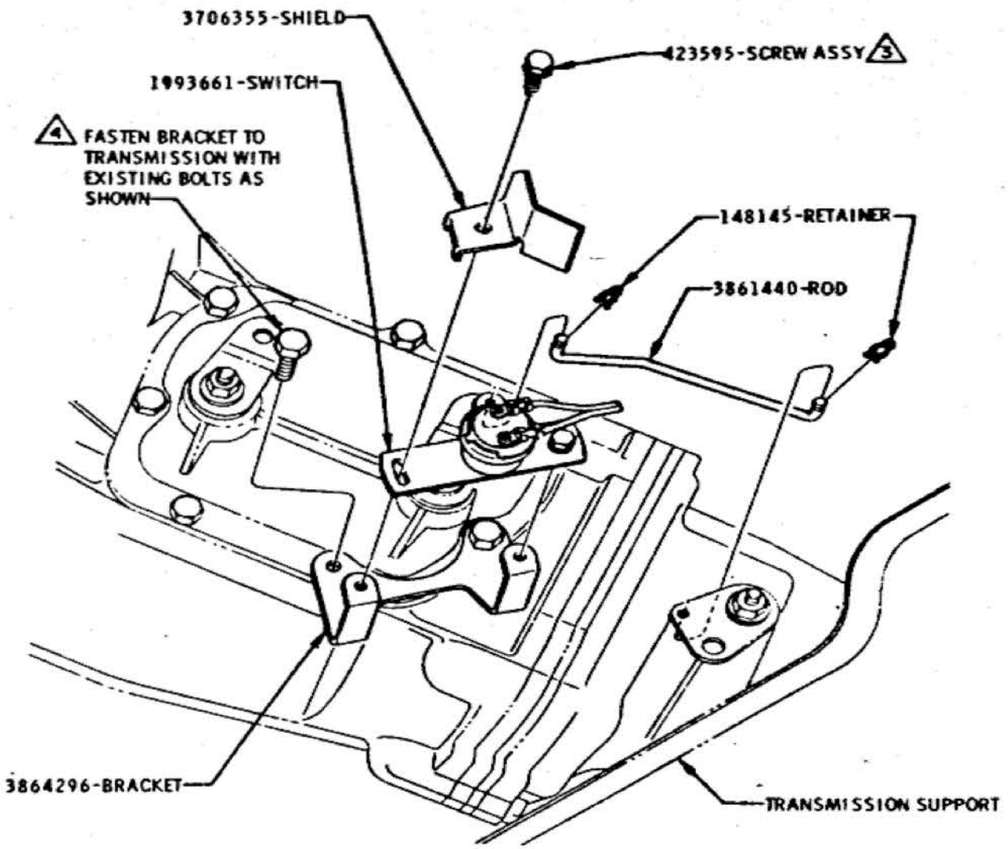

NOTE:
FOR INSTALLATION OF WIRING, SEE 12-2, 23 & 24

INSTALLATION OF BACK-UP LAMP SWITCH TO FOUR SPEED TRANSMISSION

4 14-22 LB. FT.
3 12-18 LB. IN.

BACK-UP LAMP SWITCH INSTALLATION FOR F. S. & 35M14

DATE	SYM	REVISION	DR.	CK.	DATE	SYM	REVISION	DR.	CK.	DATE	SYM	REVISION	DR.	CK.

INSTALLATION	TRANSMISSION		
DATE JULY 30, 1965	FIRST USED 1966	Oldsmobile Service & Distribution	PAGE 7-2 4A
DR. BY CURT MAY			
CHECKED HUAN PELT	SERIES A	REF. M13 M20	PART NO. 589998
APPR.			
APPR.			

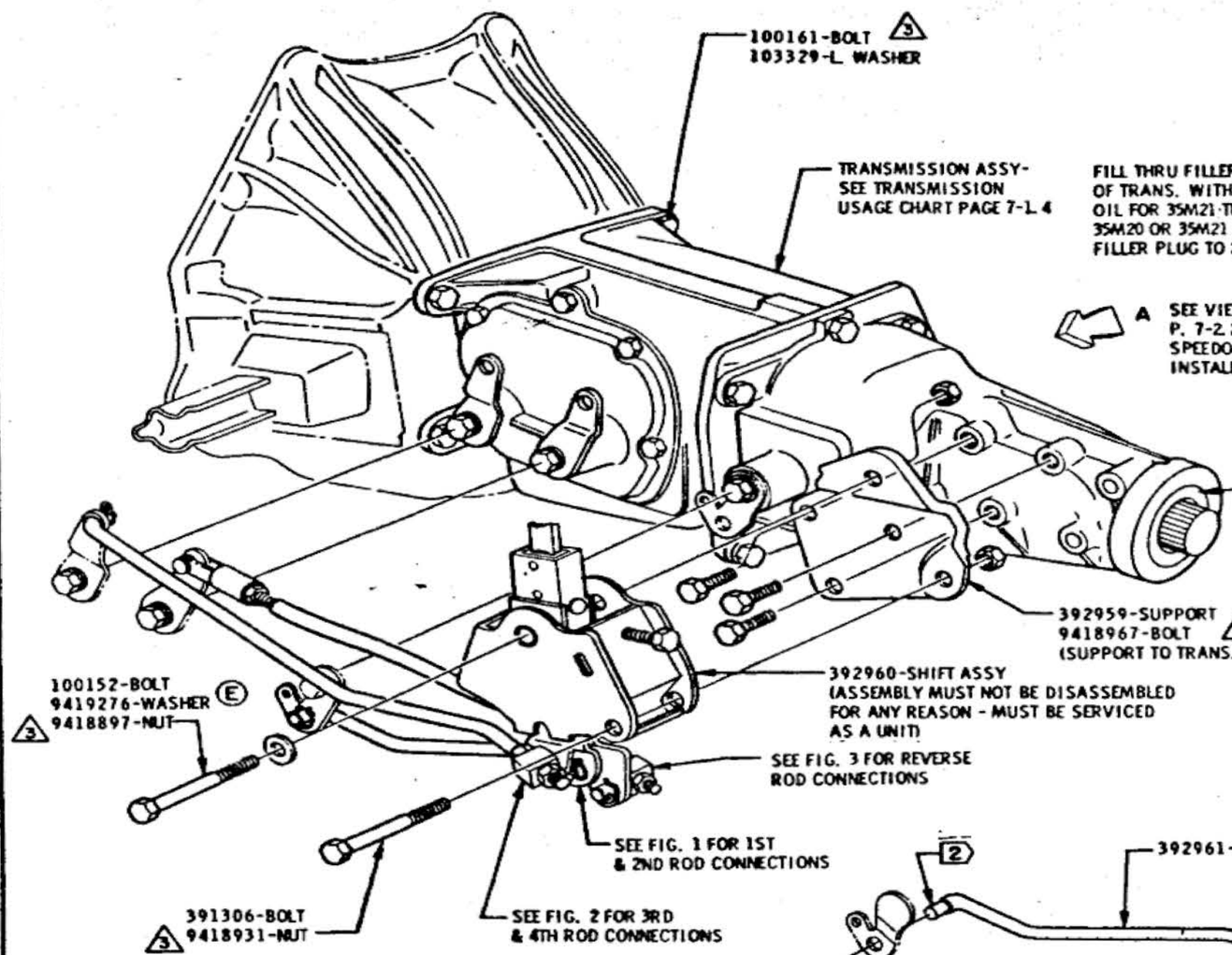

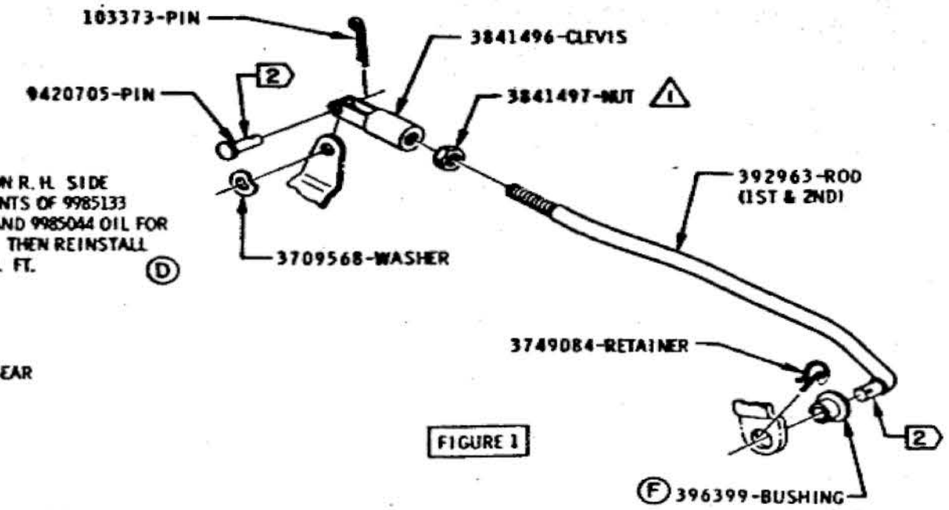

FIGURE 1

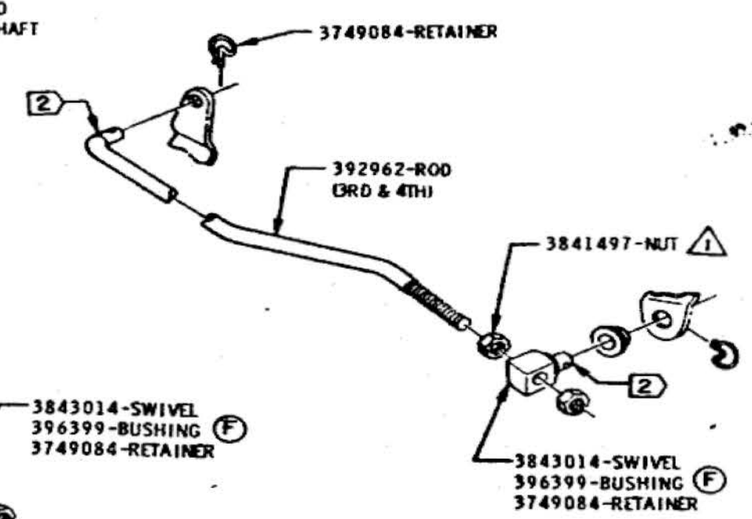

FIGURE 2

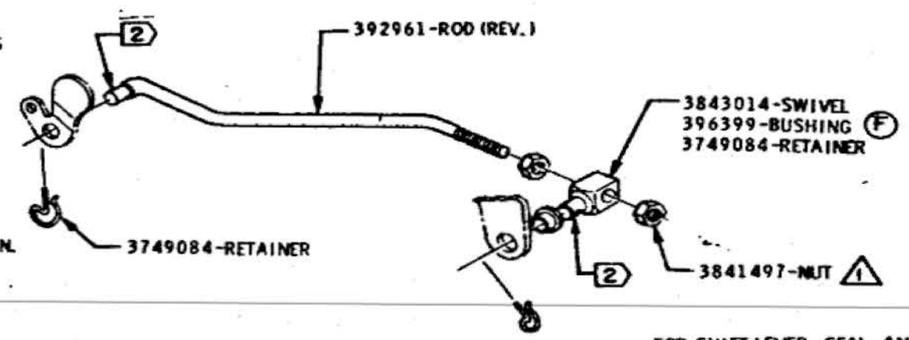

FIGURE 3

1. SET TRANSMISSION SHIFT LEVERS IN RESPECTIVE NEUTRAL DETENTS.
2. ALIGN SHIFT LEVERS IN VERTICAL POSITION.
3. INSERT .250 DIA. PIN IN SIDE OF SHIFT ASSEMBLY AND THROUGH SHIFT LEVERS.
4. TIGHTEN CLEVIS AND SWIVELS WITH RODS SET AT PROPER LENGTH.
5. REMOVE .250 DIA. PIN.

(1) 132-180 LB. IN.
(2) 20-30 LB. FT.
(3) 25-35 LB. FT.

LUBRICATE AREAS INDICATED (2) WITH 9985038 GREASE

FOR SHIFT LEVER, SEAL, AND KNOB INSTALLATION AFTER BODY DROP SEE PAGE 7-2.4

4 SPEED SYNCHROMESH FLOOR SHIFT

DATE	SYM	REVISION	DR.	CK.	DATE	SYM	REVISION	DR.	CK.	DATE	SYM	REVISION	DR.	CK.
										11-16-65	E	PART NUMBER ADDED		
										11-16-65	D	NOTE REVISED		
										9-15-65	C	9776456-PLUG CANCELLED		
										7-26-65	B	NOTE ADDED		
					2-16-66	F	WAS 392964-BUSHING			6-16-65	A	NOTE ADDED		

INSTALLATION — TRANSMISSION

DATE APRIL 20, 1965
DR. BY ED ROE
CHECKED
APPR. R.C. STEMPEL
APPR.

FIRST USED 1966

Oldsmobile GRAPHIC ILLUSTRATION

SERIES A

REF. 85M20 85M21 TR-5938

PAGE 7-2.5

PART NO. 589998

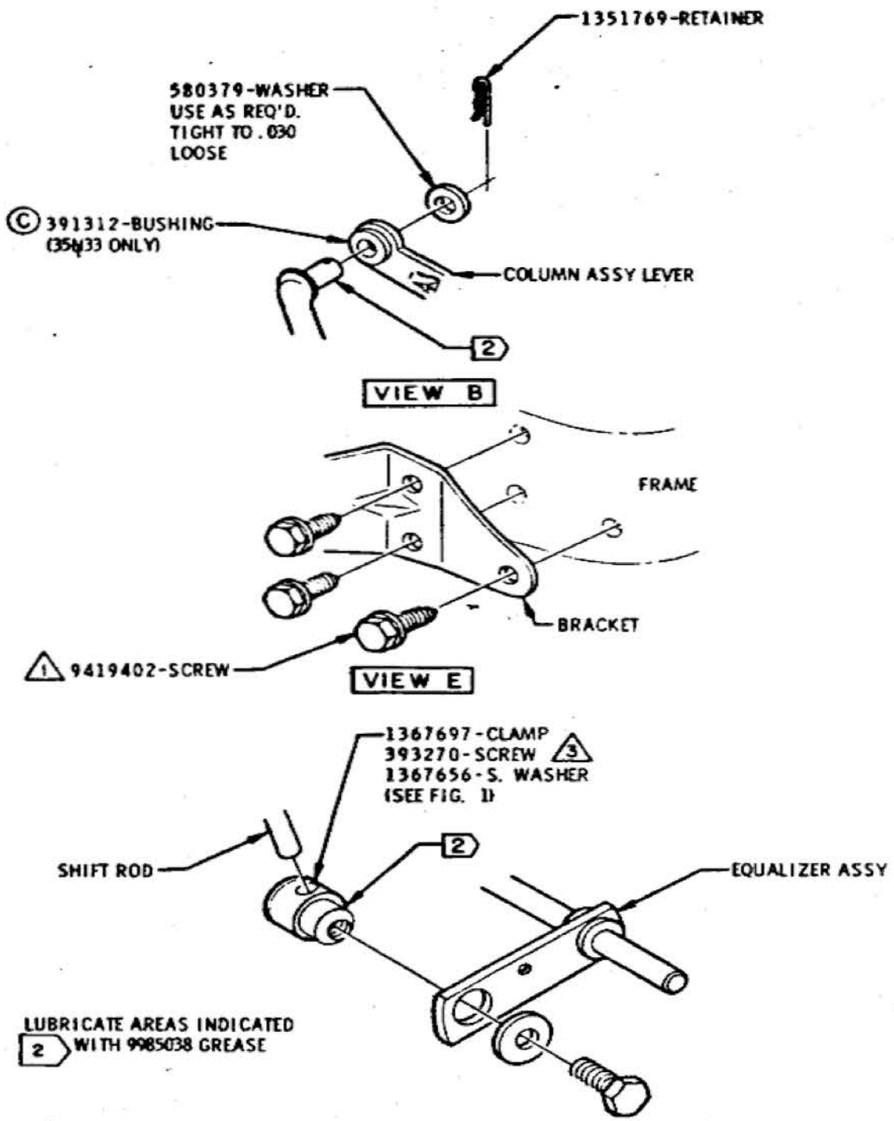

1 120-180 LB. IN.

2 16-26 LB. FT.

3 17-23 LB. FT.

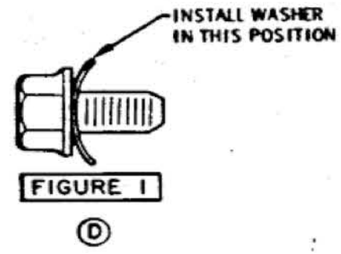

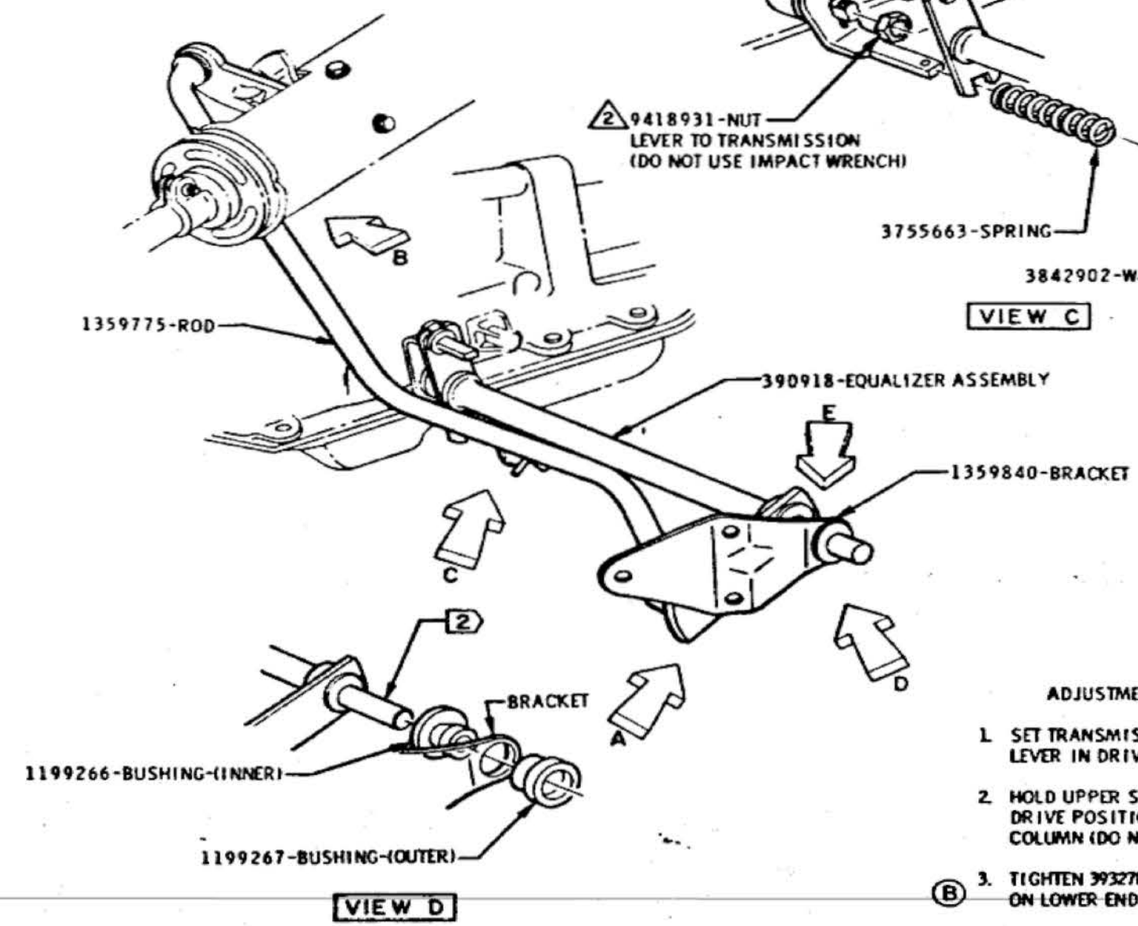

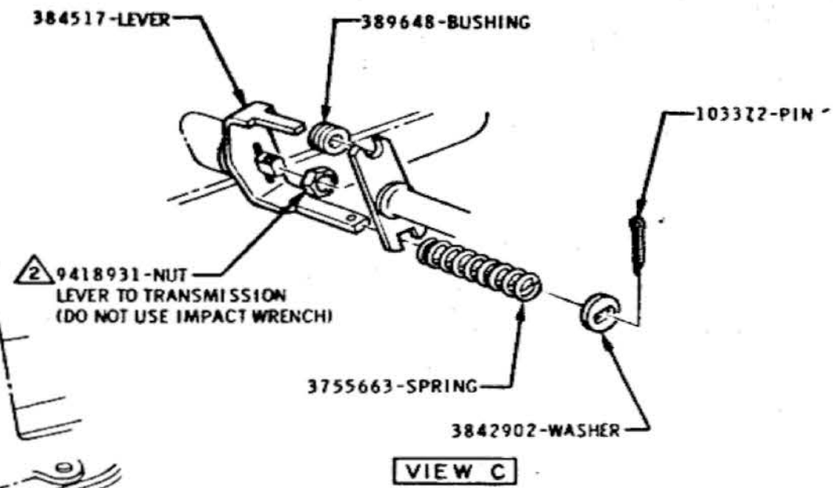

ADJUSTMENT OF SHIFT ROD

1. SET TRANSMISSION OUTER SHIFT LEVER IN DRIVE POSITION.
2. HOLD UPPER SHIFT LEVER AGAINST DRIVE POSITION STOP IN UPPER STEERING COLUMN (DO NOT RAISE LEVER).
3. Ⓑ TIGHTEN 393270-SCREW ON CLAMP ON LOWER END OF SHIFT ROD.

(JT SHIFT CONTROL)

DATE	SYM	REVISION	DR.	CK.	DATE	SYM	REVISION	DR.	CK.	DATE	SYM	REVISION	DR.	CK.
										9-20-65	D	FIGURE 1 ADDED		
										7-27-65	C	BUSHING ADDED		
										6-11-65	B	NOTE REVISED	CG	
										6-11-65	A	WAS 1367657 SCREW	CG	

INSTALLATION **TRANSMISSION**

DATE APRIL 3, 1965
DR. BY W.E. MASON
CHECKED
APPR. R.C. STEMPEL
APPR.

FIRST USED 1966

Oldsmobile GRAPHIC ILLUSTRATION

SERIES A

REF.

PAGE 7-3.1

PART NO. 589998

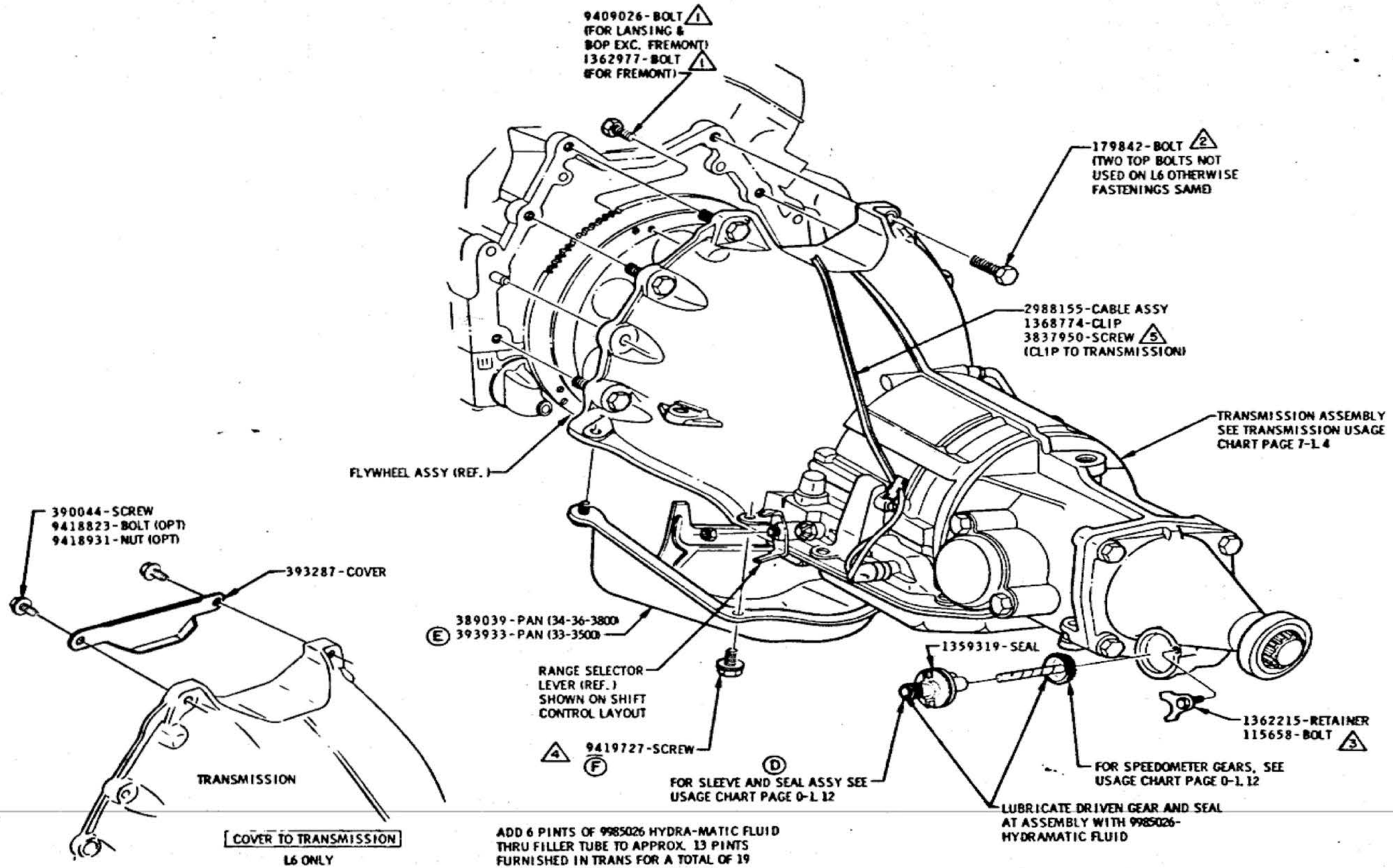

ADD 6 PINTS OF 9985026 HYDRA-MATIC FLUID THRU FILLER TUBE TO APPROX. 13 PINTS FURNISHED IN TRANS FOR A TOTAL OF 19 PINTS - SEE 391695 FOR FILL SPECS.

GETAWAY AUTOMATIC

DATE	SYM	REVISION	DR.	CK.	DATE	SYM	REVISION	DR.	CK.	DATE	SYM	REVISION	DR.	CK.
										8-3-65	E	393933 WAS 9773490		
										7-29-65	D	SLEEVE & SEAL ASSY ADDED		
										7-29-65	C	SECTION A-A REMOVED		
										6-15-65	B	VIEW ADDED		
					9-13-65	F	WAS 9419400-SCREW			6-15-65	A	NOTE REVISED		

INSTALLATION **TRANSMISSION**

DATE APRIL 7, 1965 — FIRST USED 1966 — ILLUSTRATION — PAGE 7-3.2

DR. BY W. E. MASON — SERIES A — REF. 85M33

CHECKED — PART NO. 589998

APPR. R. C. STEAMEL

APPR.

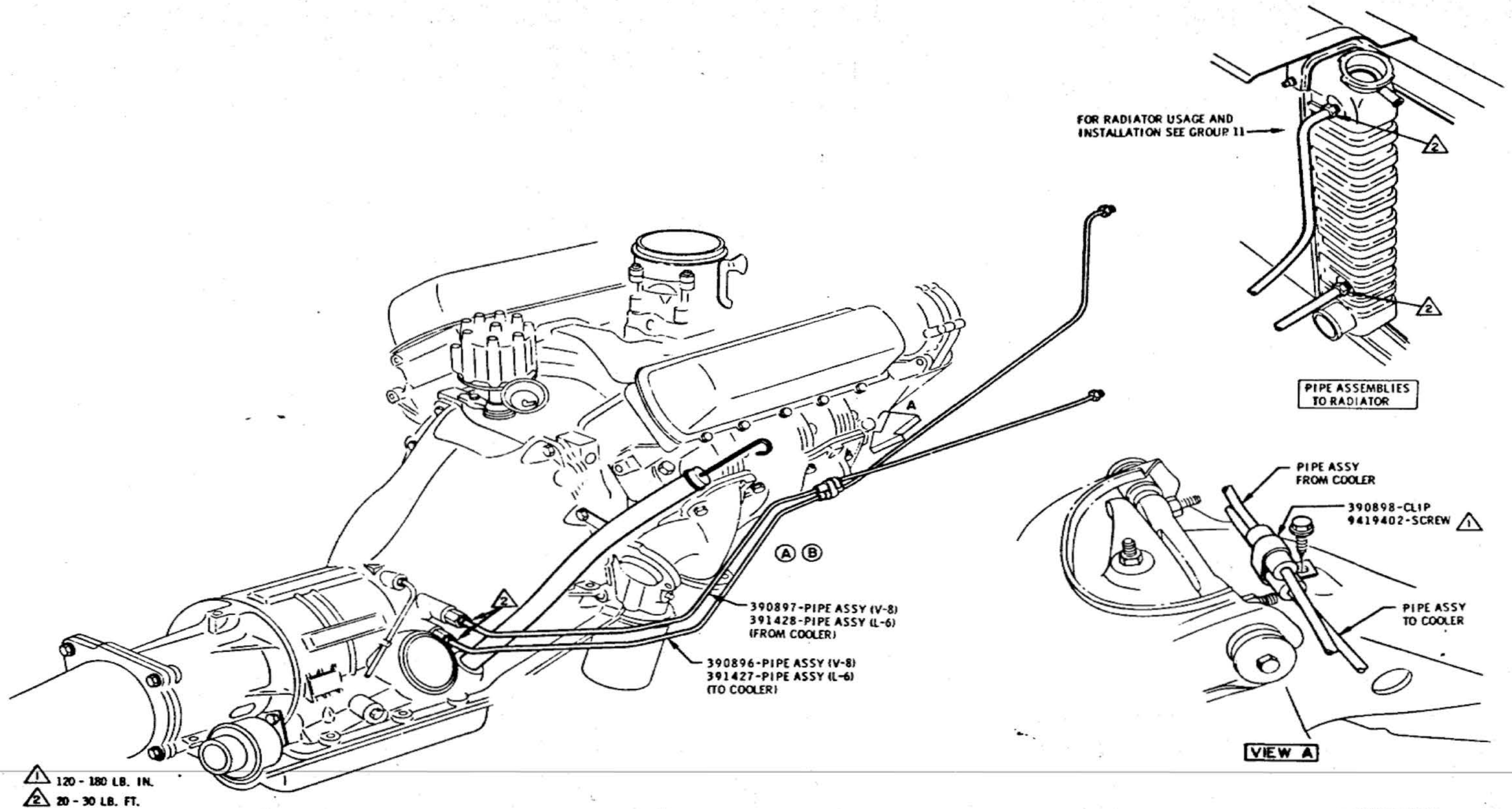

COOLER PIPES

DATE	SYM	REVISION	DR.	CK.	DATE	SYM	REVISION	DR.	CK.	DATE	SYM	REVISION	DR.	CK.
										3-11-66	C	FILLER TUBE INFO. REMOVED		
										2-8-66	B	TAPE REMOVED		
										1-20-66	A	TAPE ADDED		

INSTALLATION **TRANSMISSION**

DATE APRIL 19, 1965
DR. BY MODERN ENGINEERING
CHECKED
APPR. R.C. SEMPEL
APPR.

FIRST USED 1966
SERIES A
Oldsmobile Graphic ILLUSTRATION
REF. TA-5438

PAGE 7-3.3
PART NO. 589998

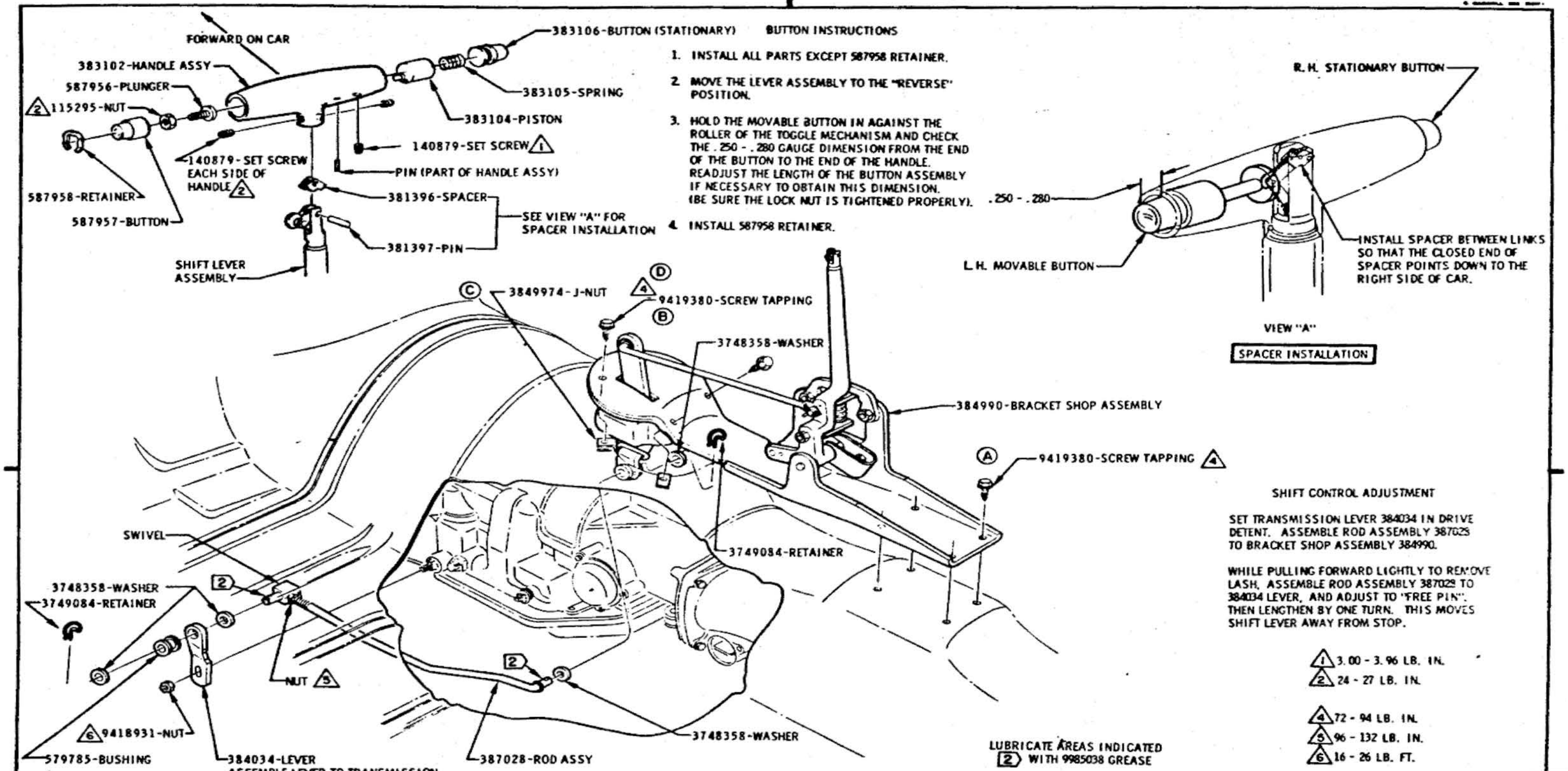

BUTTON INSTRUCTIONS

1. INSTALL ALL PARTS EXCEPT 587958 RETAINER.
2. MOVE THE LEVER ASSEMBLY TO THE "REVERSE" POSITION.
3. HOLD THE MOVABLE BUTTON IN AGAINST THE ROLLER OF THE TOGGLE MECHANISM AND CHECK THE .250 - .280 GAUGE DIMENSION FROM THE END OF THE BUTTON TO THE END OF THE HANDLE. READJUST THE LENGTH OF THE BUTTON ASSEMBLY IF NECESSARY TO OBTAIN THIS DIMENSION. (BE SURE THE LOCK NUT IS TIGHTENED PROPERLY).
4. INSTALL 587958 RETAINER.

SHIFT CONTROL ADJUSTMENT

SET TRANSMISSION LEVER 384034 IN DRIVE DETENT. ASSEMBLE ROD ASSEMBLY 387028 TO BRACKET SHOP ASSEMBLY 384990.

WHILE PULLING FORWARD LIGHTLY TO REMOVE LASH, ASSEMBLE ROD ASSEMBLY 387028 TO 384034 LEVER, AND ADJUST TO "FREE PIN". THEN LENGTHEN BY ONE TURN. THIS MOVES SHIFT LEVER AWAY FROM STOP.

1. 3.00 - 3.96 LB. IN.
2. 24 - 27 LB. IN.
4. 72 - 94 LB. IN.
5. 96 - 132 LB. IN.
6. 16 - 26 LB. FT.

EXPLODED VIEW OF SHIFT CONTROL LEVER INSTALLATION

CONSOLE JT SHIFT

DATE	SYM	REVISION	DR.	CK.	DATE	SYM	REVISION	DR.	CK.	DATE	SYM	REVISION	DR.	CK.
										9-21-65	D	TORQUE SPEC. REVISED		
										9-21-65	C	WAS 3840110-J-NUT		
										9-21-65	B	WAS 9419321-SCREW		
										9-21-65	A	WAS 9419727-SCREW		

INSTALLATION **TRANSMISSION**

DATE APRIL 5, 1965
DR. BY Scott McDonald
CHECKED
MFR. R.C. STEMPEL
APPR.

FIRST USED 1966

Oldsmobile Service ILLUSTRATION

SERIES A

REF. TR-4284

PAGE 7-3.4

PART NO. 589998

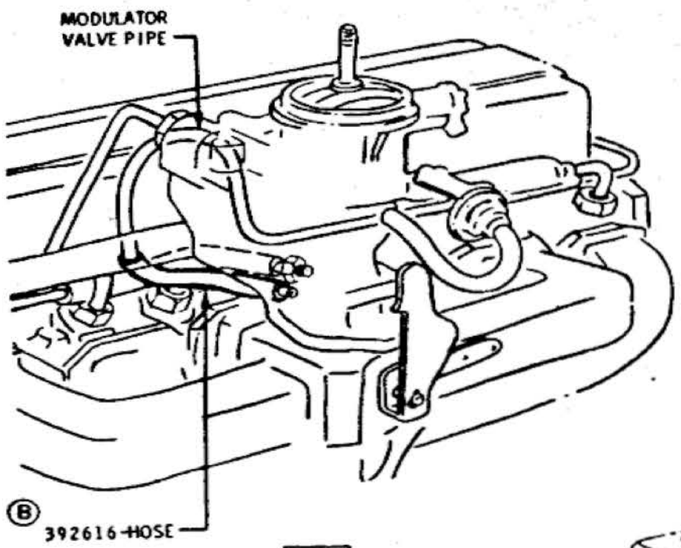

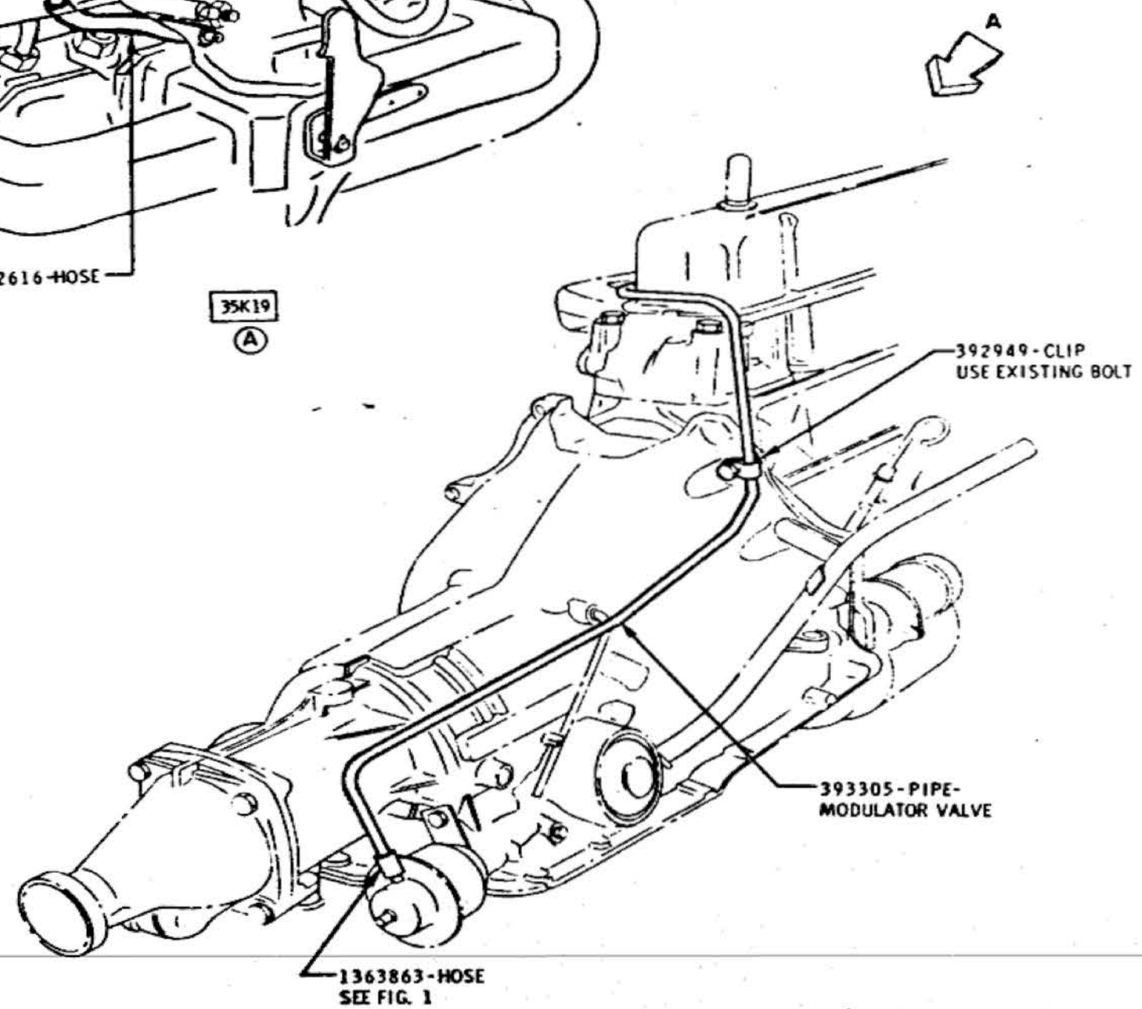

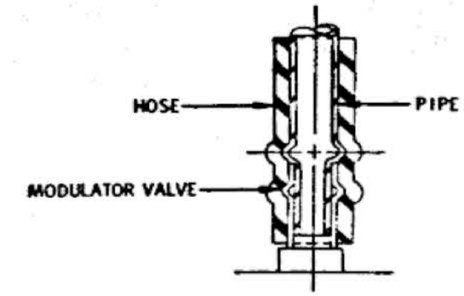

FIGURE 1 ASSEMBLED

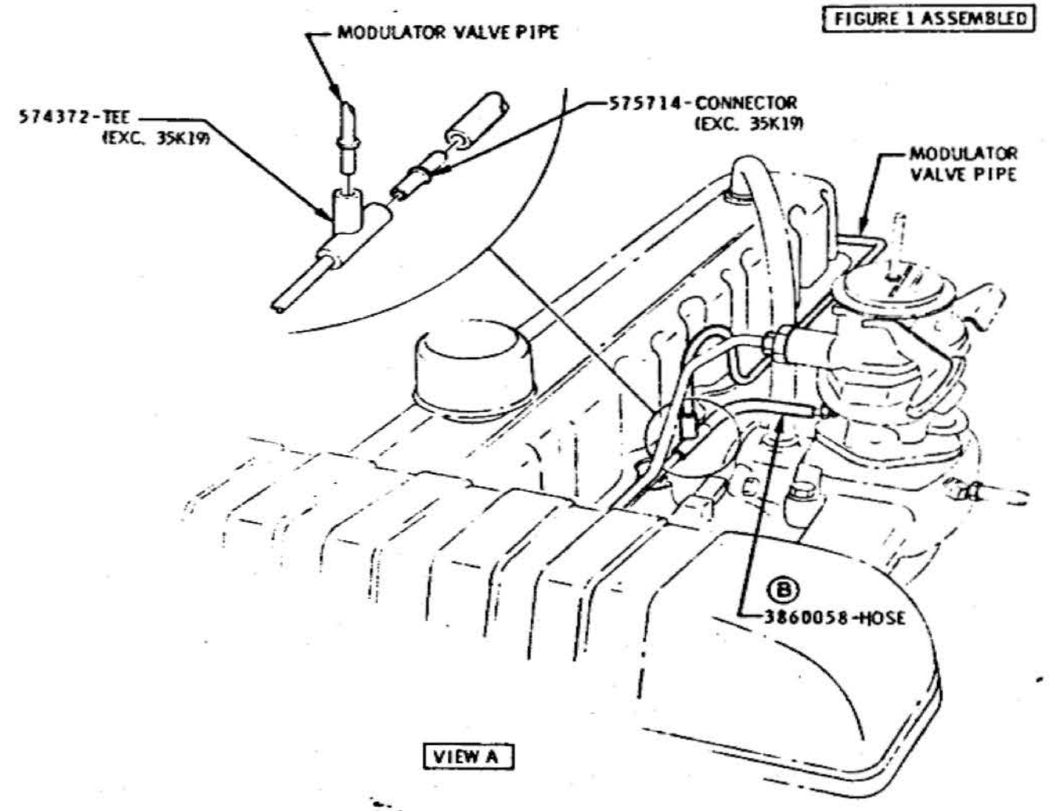

(L6 MODULATOR PIPE)

DATE	SYM	REVISION	DR.	CK.	DATE	SYM	REVISION	DR.	CK.	DATE	SYM	REVISION	DR.	CK.
										6-18-65	B2	PART NUMBERS ADDED		
										5-26-65	A	VIEW [illegible]		

INSTALLATION	TRANSMISSION		
DATE MAY 17, 1965	FIRST USED 1966	Oldsmobile Graphic Illustration	PAGE 7-3.6
DR. BY W.C. MASON			
CHECKED [illegible]	SERIES A	REF. 35M31 TR-5928	PART NO. 589998
APPR.			
APPR.			

OLDSMOBILE PRODUCT INFORMATION MANUAL

8 — FUEL & EXHAUST

GROUP 8-FUEL & EXHAUST SYSTEM

FUEL SYSTEM

394317 CHART-TANK ASSEMBLY-FUEL (COMPLETE) ---------- 8-2.0
FUEL PIPES, TANK ASSY & ATTACHING PARTS ---------- 8-2.1
FUEL RETURN SYSTEM (35L77-L78) ---------- 8-2.2
STATION WAGON MODELS ---------- 8-2.3

EXHAUST SYSTEM

CHART-EXHAUST SYSTEM USAGE ---------- 8-3.0
V8 MUFFLERS, PIPES & FASTENINGS (EXC. EXT. WAGONS) ---------- 8-3.1
V8 4 BBL. ENGINE MODELS (EXC. EXT. WAGONS) ---------- 8-3.2
EXTENDED STATION WAGON MODELS ---------- 8-3.3
DUAL EXHAUST MODELS WITH 35L77-L78 ---------- 8-3.4
L6 ENGINE MODELS ---------- 8-3.5
CLEARANCES ---------- 8-3.6

FUEL GAGE AND TANK ASSY USAGE			
USAGE	GAGE ASSY	TANK ASSY (LESS GAGE)	TANK ASSY (COMPLETE)
ALL MODELS EXC. 35L77, L78 & SW	6427069	390282	394196
35L77, L78	6427151	390282	390287
STANDARD STATION WAGON	6427069	381982	394197
EXTENDED STATION WAGON	6427069	382761	394195

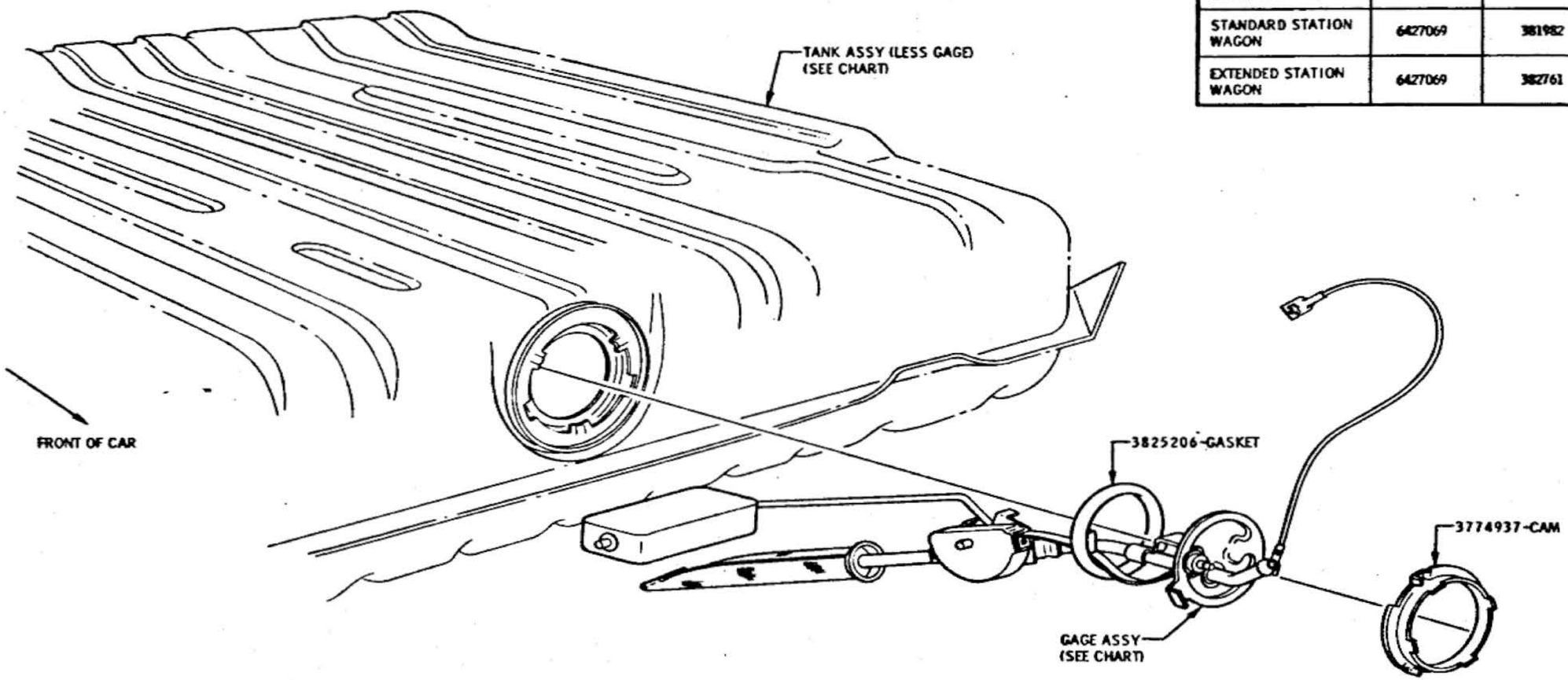

DATE	SYM	REVISION	DR.	CK.	DATE	SYM	REVISION	DR.	CK.	DATE	SYM	REVISION	DR.	CK.

CHART TANK ASSEMBLY-FUEL (COMPLETE)

DATE SEPTEMBER 3, 1965
DR. BY W.E. MASON
CHECKED
APPR.
APPR.

FIRST USED 1966 — Oldsmobile Service ILLUSTRATION

SERIES A — REF.

PAGE 8-2.0

PART NO. 394317

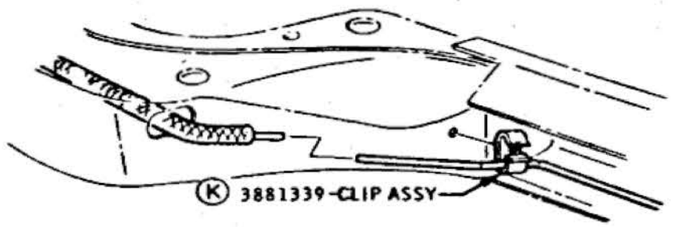

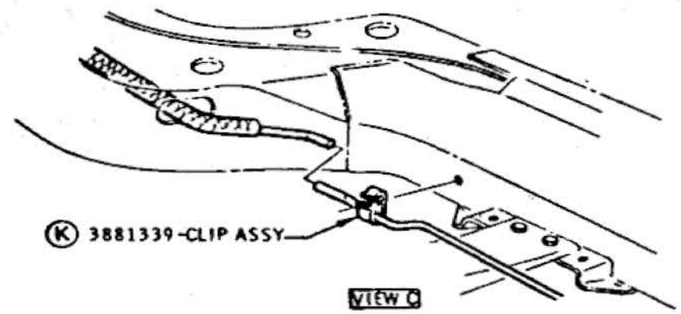

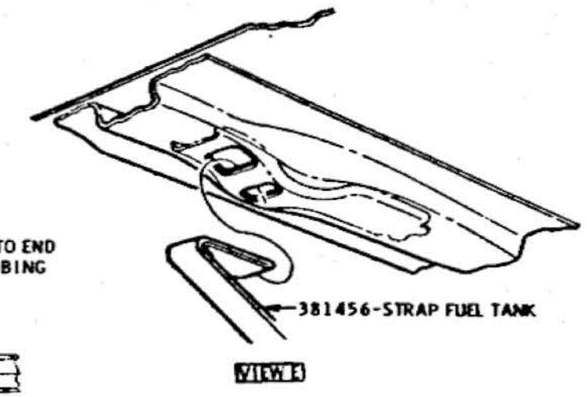

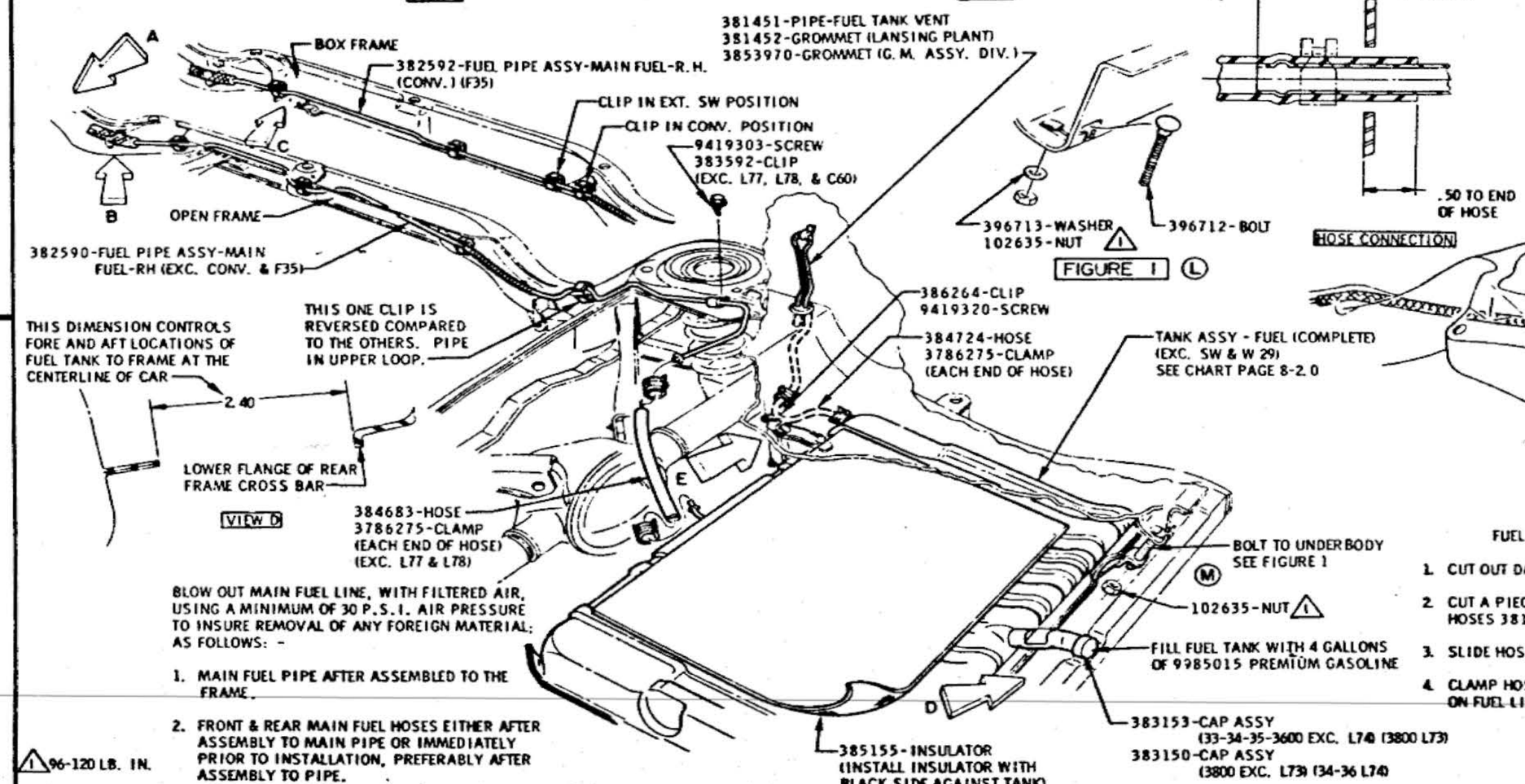

BLOW OUT MAIN FUEL LINE, WITH FILTERED AIR, USING A MINIMUM OF 30 P.S.I. AIR PRESSURE TO INSURE REMOVAL OF ANY FOREIGN MATERIAL; AS FOLLOWS: -

1. MAIN FUEL PIPE AFTER ASSEMBLED TO THE FRAME.
2. FRONT & REAR MAIN FUEL HOSES EITHER AFTER ASSEMBLY TO MAIN PIPE OR IMMEDIATELY PRIOR TO INSTALLATION, PREFERABLY AFTER ASSEMBLY TO PIPE.

△1 96-120 LB. IN.

FUEL & FUEL RETURN LINE REPAIR PROCEDURE

1. CUT OUT DAMAGED PORTION OF FUEL LINE.
2. CUT A PIECE OF HOSE 4" LONGER THAN PORTION OF LINE REMOVED. HOSES 381454 (FUEL) AND 381443 (FUEL RETURN) MAY BE USED.
3. SLIDE HOSE 2" ONTO EACH PORTION OF FUEL PIPE.
4. CLAMP HOSE TO PIPE ON EACH SIDE OF REPAIR. USE CLAMP 3786275 ON FUEL LINES AND CLAMP 9770783 ON FUEL RETURN LINES.

FUEL PIPES, TANK ASSY & ATTACHING PARTS

DATE	SYM	REVISION	DR.	CK.	DATE	SYM	REVISION	DR.	CK.	DATE	SYM	REVISION	DR.	CK.
							RELOCATED			8-31-65	E	WAS 383942 & 384950		
					3-16-66	J	NOTE REVISED AND			8-27-65	D	NOTE REVISED		
3-24-66	M	FASTENINGS REVISED			3-3-66	H	NOTE ADDED			8-17-65	C_2	WAS 3753771 CLIP ASSY		
3-24-66	L	FIGURE 1 ADDED			1-27-66	G	WAS 3902201 TANK ASSY			7-12-65	B	NOTE REVISED		
3-2-66	K_2	WAS 387896			1-21-66	F	FILLER NECK REVISED			6-26-65	A_2	WAS 3800 L65		

INSTALLATION — FUEL SYSTEM

DATE APRIL 1, 1965 — FIRST USED 1966 — Oldsmobile Service ILLUSTRATION

DR. BY MODERN — CHECKED — APPR. — APPR.

SERIES A — REF.

PAGE 8-2.1

PART NO. 589998

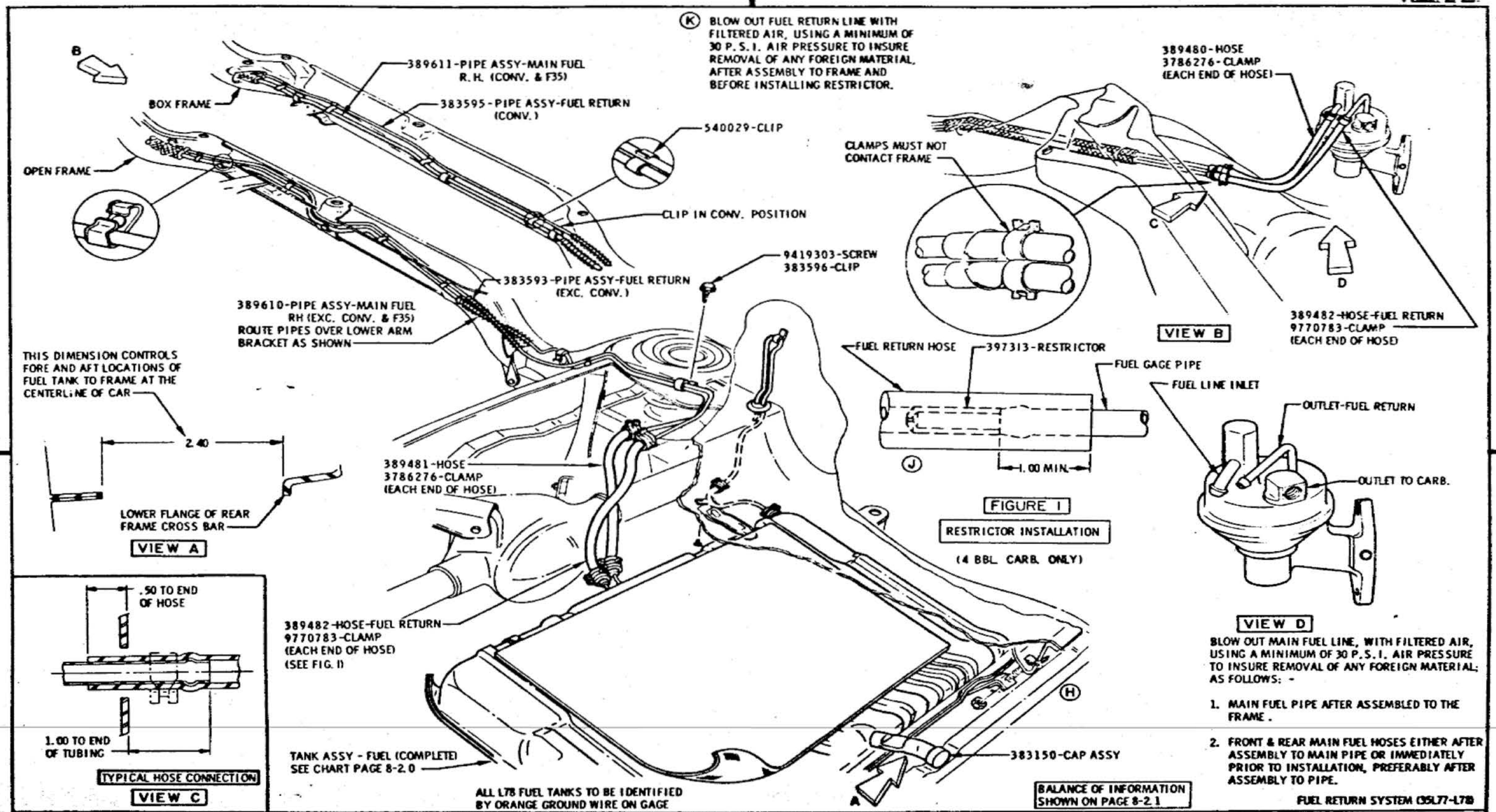

DATE	SYM	REVISION	DR.	CK.	DATE	SYM	REVISION	DR.	CK.	DATE	SYM	REVISION	DR.	CK.
					5-2-66	K	NOTE ADDED			1-27-66	E	WAS 390287 TANK ASSY		
					5-2-66	J	FIGURE 1 ADDED.			1-21-66	D	FILLER NECK REVISED		
					3-24-66	H	FASTENING REVISED			10-11-65	C	WAS 389481-HOSE		
					3-16-66	G	NOTE ADDED			9-17-65	B	35060 INFO REMOVED		
					2-8-66	F	VIEW ADDED			8-31-65	A	BACKGROUND REVISED		

INSTALLATION — FUEL SYSTEM

DATE APRIL 2, 1965 — FIRST USED 1966 — Oldsmobile GRAPHIC ILLUSTRATION

DR. BY ED ROE — CHECKED — APPR. — APPR.

SERIES A — REV.

PAGE 8-2.2

PART NO. 589998

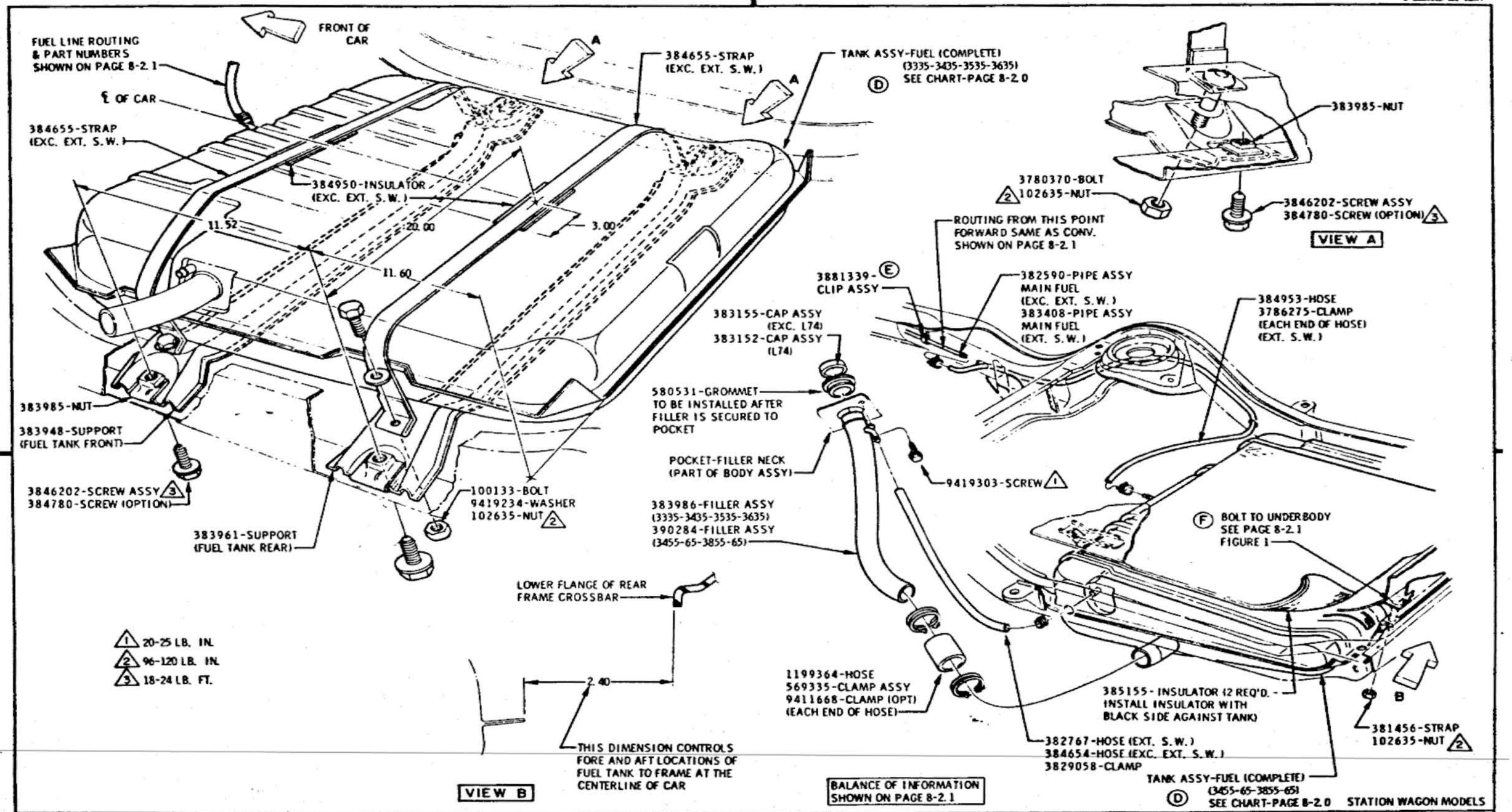

DATE	SYM	REVISION	DR.	CK.	DATE	SYM	REVISION	DR.	CK.	DATE	SYM	REVISION	DR.	CK.
										12-21-65	D	NOTE REVISED		
										8-31-65	C	QUANTITY ADDED		
										8-17-65	B	WAS 3753771 CLIP ASSY		
					3-24-66	F	NOTE ADDED			7-16-65	A	WAS 383942 & 389950		
					3-22-66	E	WAS 537296					INSULATORS		

INSTALLATION **FUEL SYSTEM**

DATE APRIL 2, 1965
DR. BY Ed Roe
CHECKED
APPR.
APPR.

FIRST USED 1966 — Oldsmobile Service ILLUSTRATION

SERIES A

REF.

PAGE 8-2.3

PART NO. 589998

Ⓐ

MODEL	GROUP	CROSS OVER PIPE ASSY.	EXHAUST MANIFOLD CAP	EXHAUST PIPE FLANGE	EXHAUST PIPE		MUFFLER ASSY		MUFFLER TO RESONATOR PIPE	RESONATOR ASSY	TAIL PIPE	
					R. H.	L. H.	R. H.	L. H.			R. H.	L. H.
33-3500	8C	—	—	3761393	—	394533	—	393278	393279	393280	393281 (EXC. S. W.) 393282 (S. W.)	—
34-3600 (EXC. EXT. S. W.)	8C	382629	—	382486	391996	—	387634	—	—	—	391260 (EXC. S. W.) 1369943 (S. W.)	—
34-3800 (EXTENDED S. W.)	8C	382629	—	382486	391996	—	387636	—	387638	383599	—	383723
3800 (EXC. EXT. S. W.)	8C	382629	—	382486	391996	—	387636	—	387637	383599	—	391261 (EXC. S. W.) 384015 (S. W.)
34-3600	35L73 35L74 35L76											
34-36-3800	35N10	—	382636	586419	—	391997	387634	387635	—	—	391260	391259
34-36-3800	35N11	—	—	382486	—	389465	393048	393049	—	—	392052	392053

DATE	SYM	REVISION	DR.	CK.	DATE	SYM	REVISION	DR.	CK.	DATE	SYM	REVISION	DR.	CK.
										10-7-65	A	394533 WAS 393023		

CHART EXHAUST SYSTEM USAGE

DATE SEPTEMBER 22, 1965 | FIRST USED 1966 | Oldsmobile Service ILLUSTRATION | PAGE 8-3.0

DR. BY M. BARNHART | SERIES A | REF. | PART NO. 589998

CHECKED M. Barnhart

APPR.

APPR.

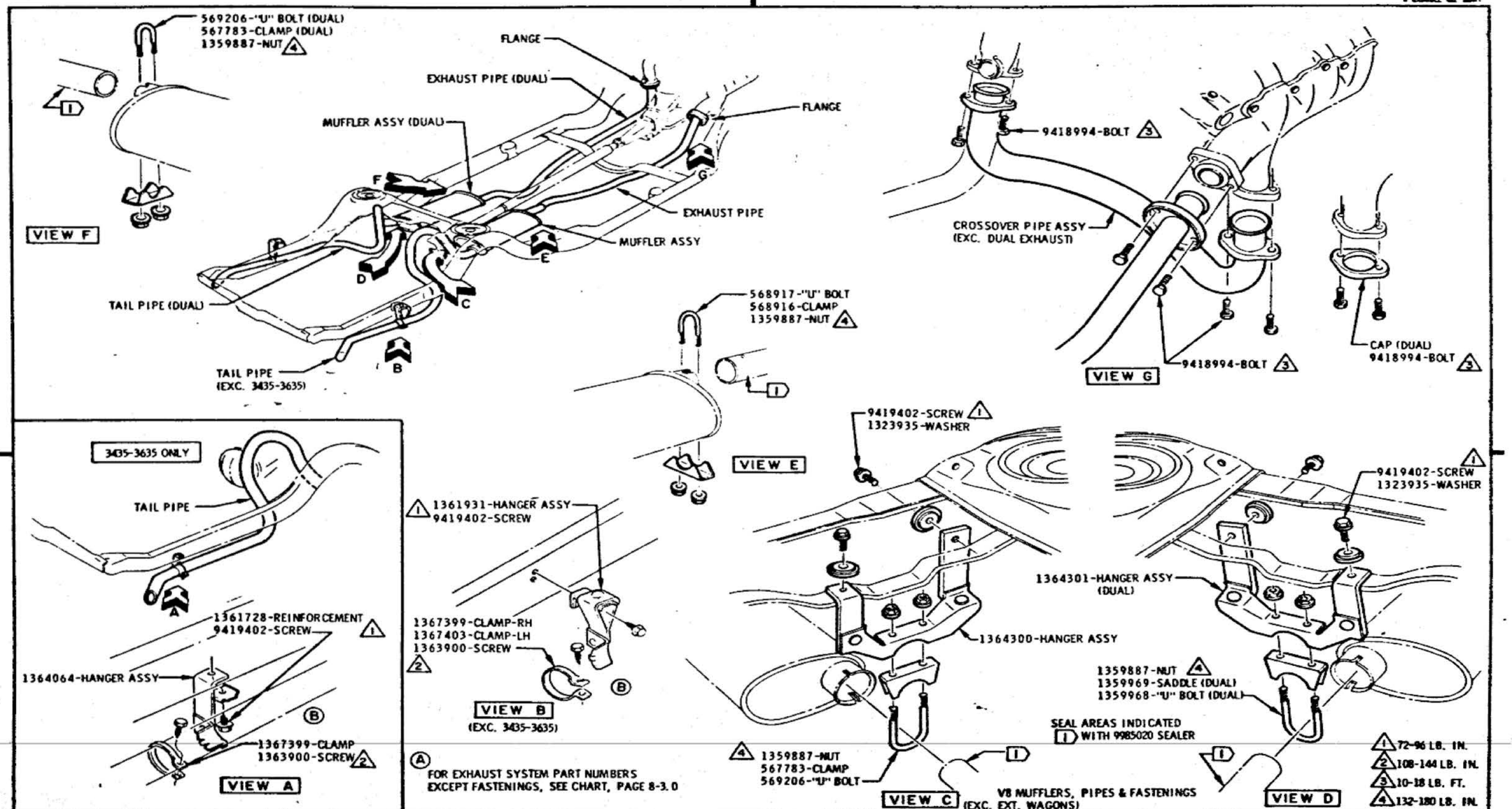

DATE	SYM	REVISION	DR.	CK.	DATE	SYM	REVISION	DR.	CK.	DATE	SYM	REVISION	DR.	CK.
										22566	B	REVISED TO DETAIL		
										92265	A	BOARD REVISED TO REFLECT CHAR: USAGE		

INSTALLATION **EXHAUST SYSTEM**

DATE MARCH 16, 1965
DR. BY W.E. MASON
CHECKED
APPR.
APPR.

FIRST USED 1966 — Oldsmobile ILLUSTRATION

SERIES A — REF.

PAGE 8-3.1

PART NO. 589998

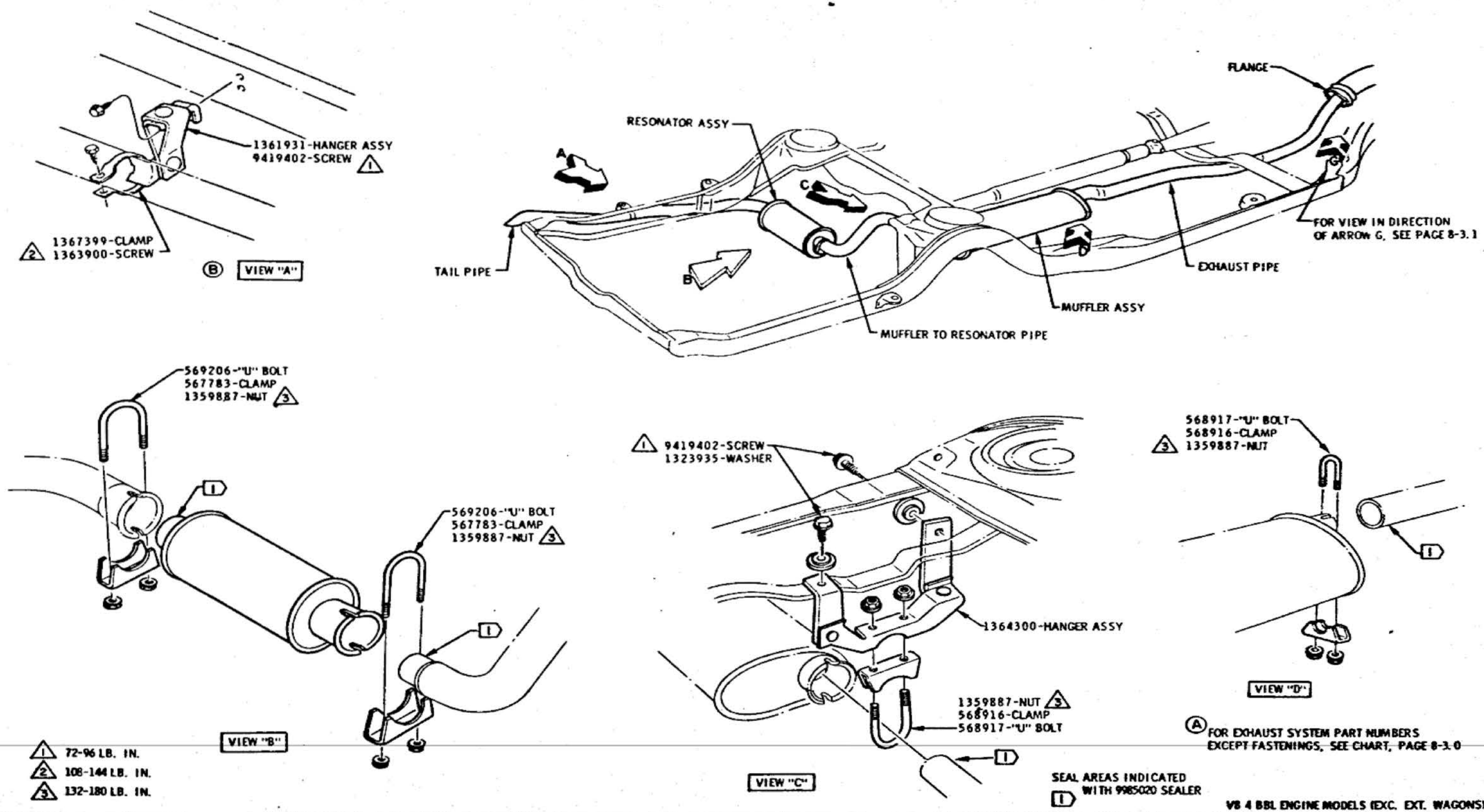

DATE	SYM	REVISION	DR.	CK.	DATE	SYM	REVISION	DR.	CK.	DATE	SYM	REVISION	DR.	CK.
										2-2546	B	REVISED TO DETAIL	UR	MB
										0-2265	A	BOARD REVISED TO REFLECT CHART USAGE		

INSTALLATION **EXHAUST SYSTEM**

DATE MARCH 16, 1965
DR. BY W. E. MASON
CHECKED
APPR.
APPR.

FIRST USED 1966 — Oldsmobile Inc. ILLUSTRATION

SERIES A — REV. — PART NO. 589998

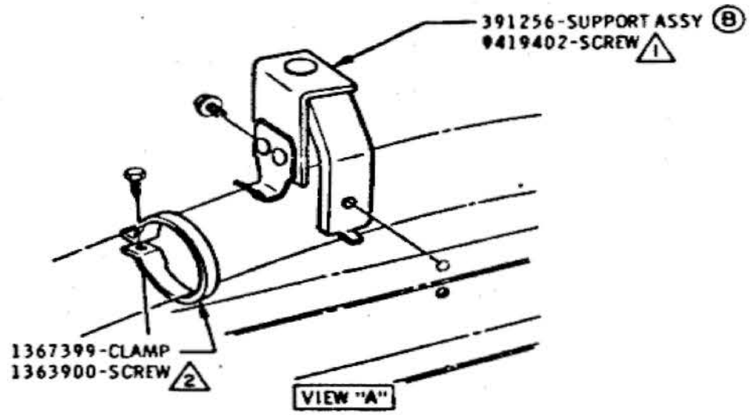

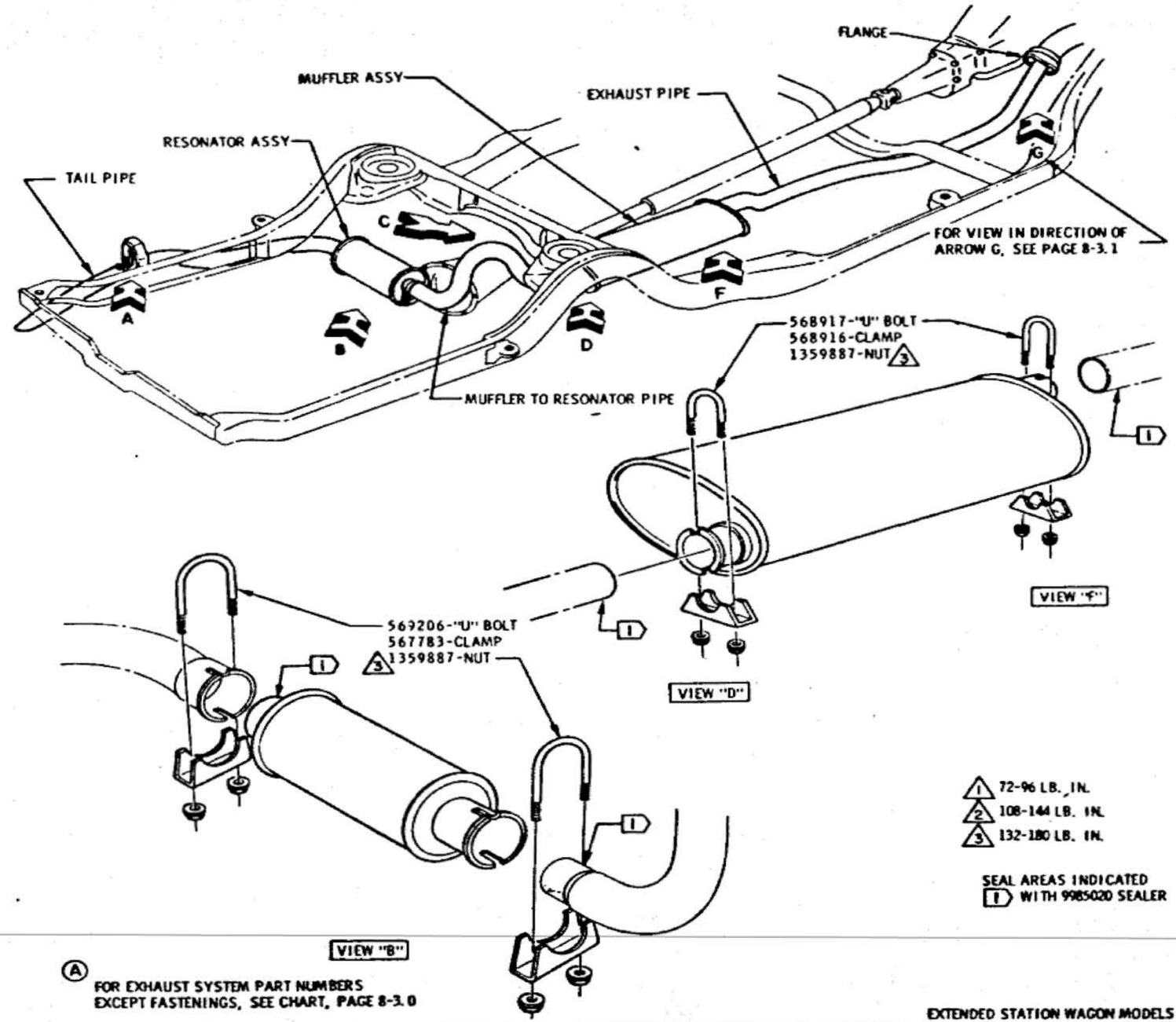

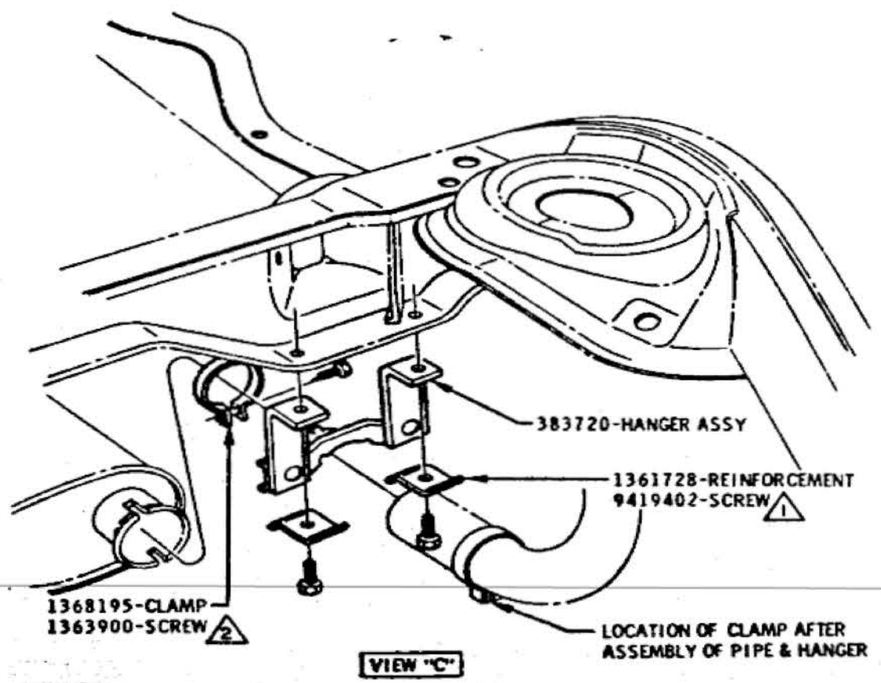

△1 72-96 LB. IN.
△2 108-144 LB. IN.
△3 132-180 LB. IN.

SEAL AREAS INDICATED Ⓘ WITH 9985020 SEALER

Ⓐ FOR EXHAUST SYSTEM PART NUMBERS EXCEPT FASTENINGS, SEE CHART, PAGE 8-3.0

EXTENDED STATION WAGON MODELS

DATE	SYM	REVISION	DR.	CK.	DATE	SYM	REVISION	DR.	CK.	DATE	SYM	REVISION	DR.	CK.
										5-2-66	B	REVISED TO DETAIL		
										9-22-65	A	BOARD REVISED TO REFLECT CHART USAGE		

INSTALLATION	EXHAUST SYSTEM		
DATE MARCH 16, 1965	FIRST USED 1966	Oldsmobile Graphic Illustration	PAGE 8-3.3
DR. BY W.E. MASON			
CHECKED	SERIES A	REV.	PART NO. 589998
APPR.			
APPR.			

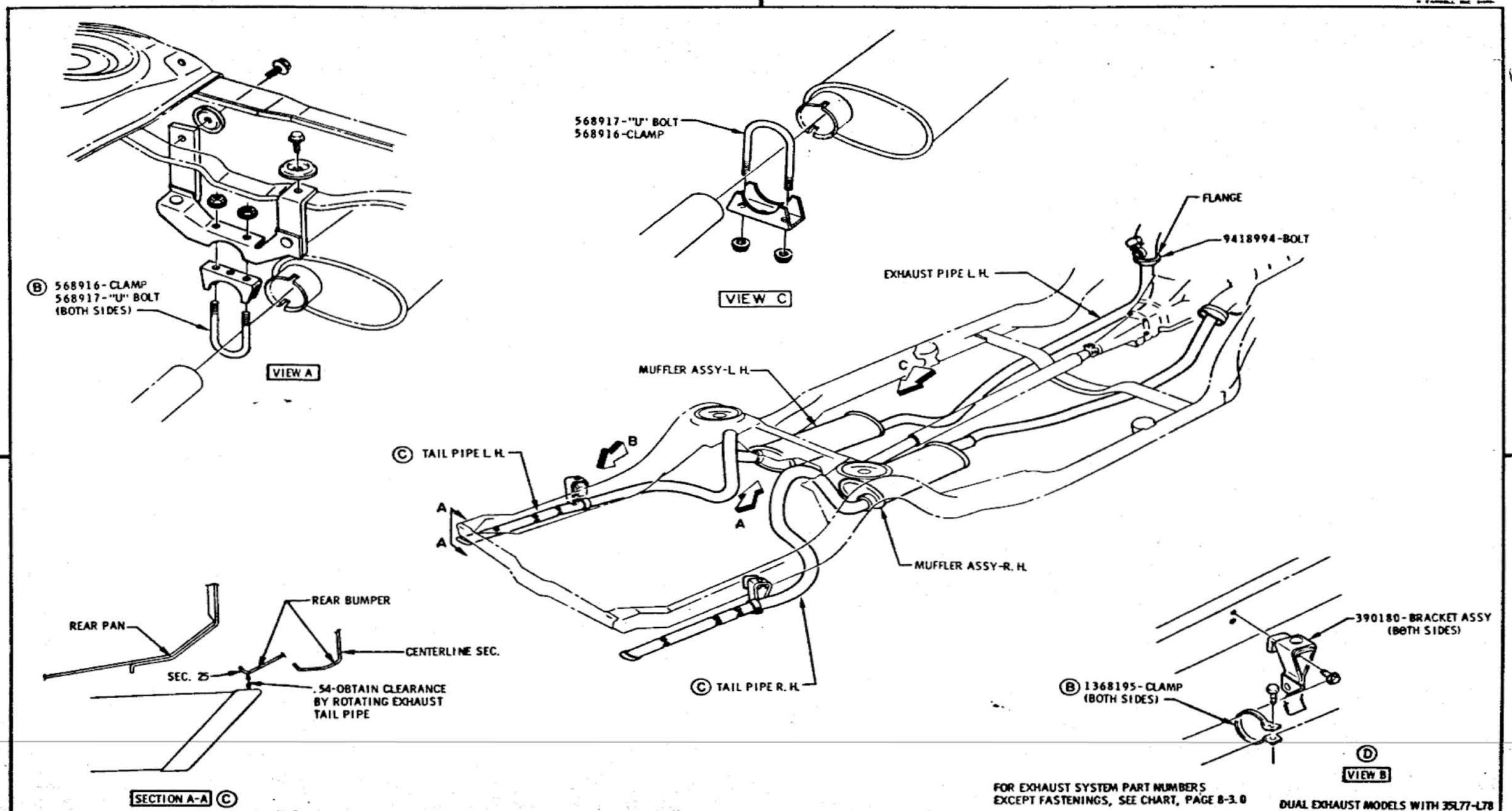

FOR EXHAUST SYSTEM PART NUMBERS EXCEPT FASTENINGS, SEE CHART, PAGE 8-3.0

DUAL EXHAUST MODELS WITH 35L77-L78

DATE	SYM	REVISION	DR.	CK.	DATE	SYM	REVISION	DR.	CK.	DATE	SYM	REVISION	DR.	CK.
										2-28-66	D	REVISED TO DETAIL		
										10-11-65	C_3	REVISED TO DETAIL		
										10-7-65	B_2	PART NOS. REVISED		
										9-22-65	A	BOARD REVISED TO REFLECT CHART USAGE		

INSTALLATION **EXHAUST SYSTEM**

DATE MARCH 16, 1965
DR. BY W.C. MASON
CHECKED
APPR.
APPR.

FIRST USED 1966

Oldsmobile Classic ILLUSTRATION

SERIES A

REV.

PAGE 8-3.4

PART NO. 589998

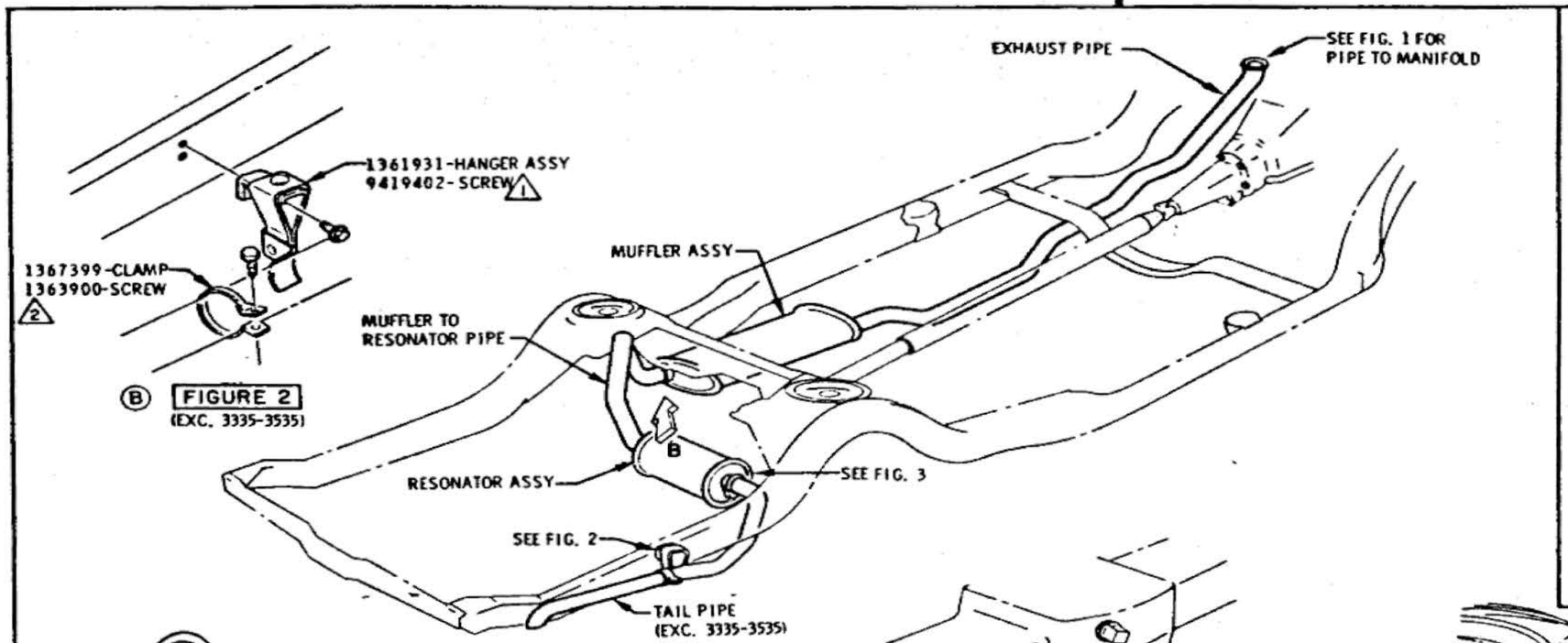

B FIGURE 2 (EXC. 3335-3535)

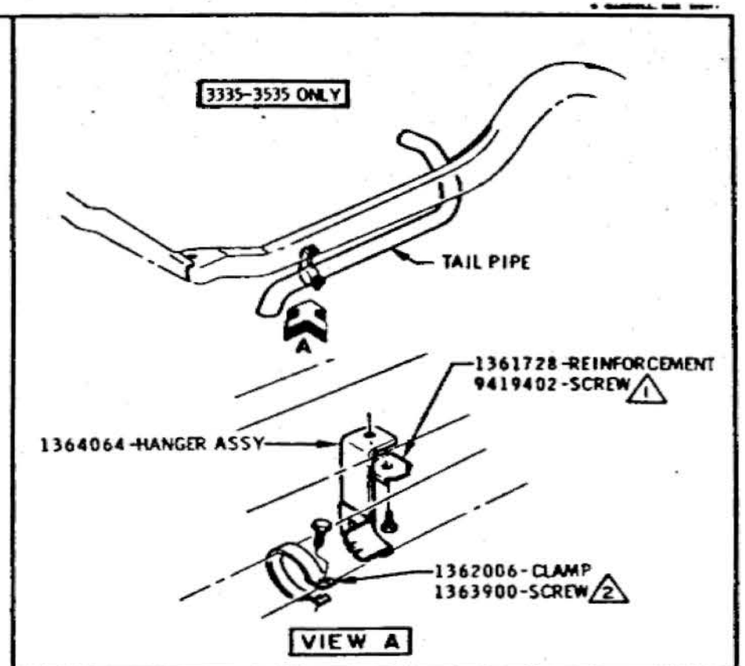

VIEW A

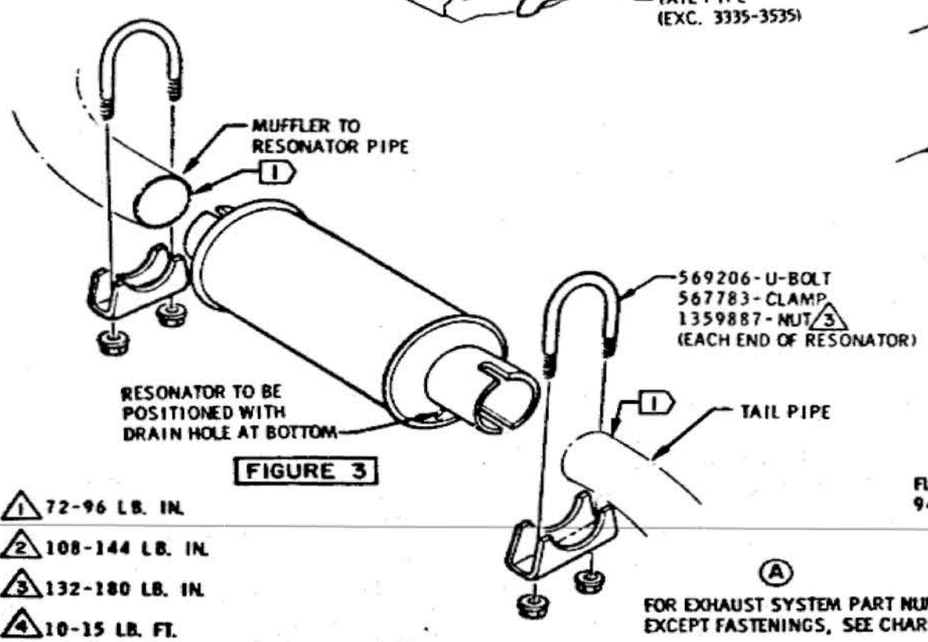

FIGURE 3

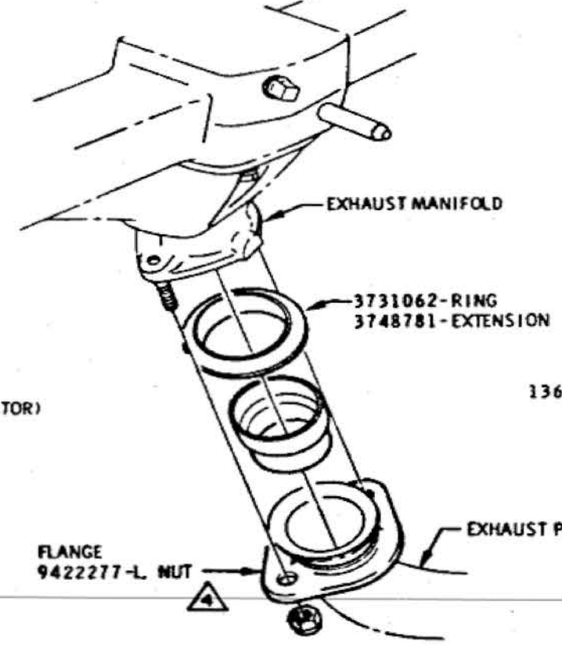

FIGURE 1

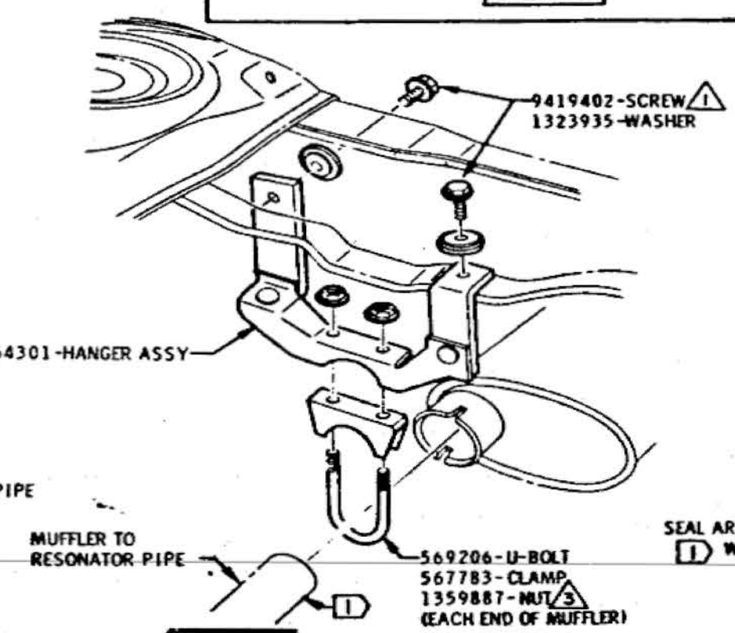

VIEW B

1 72-96 LB. IN.

2 108-144 LB. IN.

3 132-180 LB. IN.

4 10-15 LB. FT.

A FOR EXHAUST SYSTEM PART NUMBERS EXCEPT FASTENINGS, SEE CHART, PAGE 8-3.0

SEAL AREAS INDICATED 1 WITH 9985020 SEALER.

L6 ENGINE MODELS

DATE	SYM	REVISION	DR.	CK.	DATE	SYM	REVISION	DR.	CK.	DATE	SYM	REVISION	DR.	CK.
										22866	B	REVISED TO DETAIL	E/R	
										92265	A	BOARD REVISED TO REFLECT CHART USAGE	E/R	

INSTALLATION **EXHAUST SYSTEM**

DATE MAY 14, 1965 — FIRST USED 1966 — Oldsmobile Line ILLUSTRATION — PAGE 8-3.5

DR. BY W.E. MASON — CHECKED — APPR. — APPR.

SERIES A — REF. — PART NO. 589998

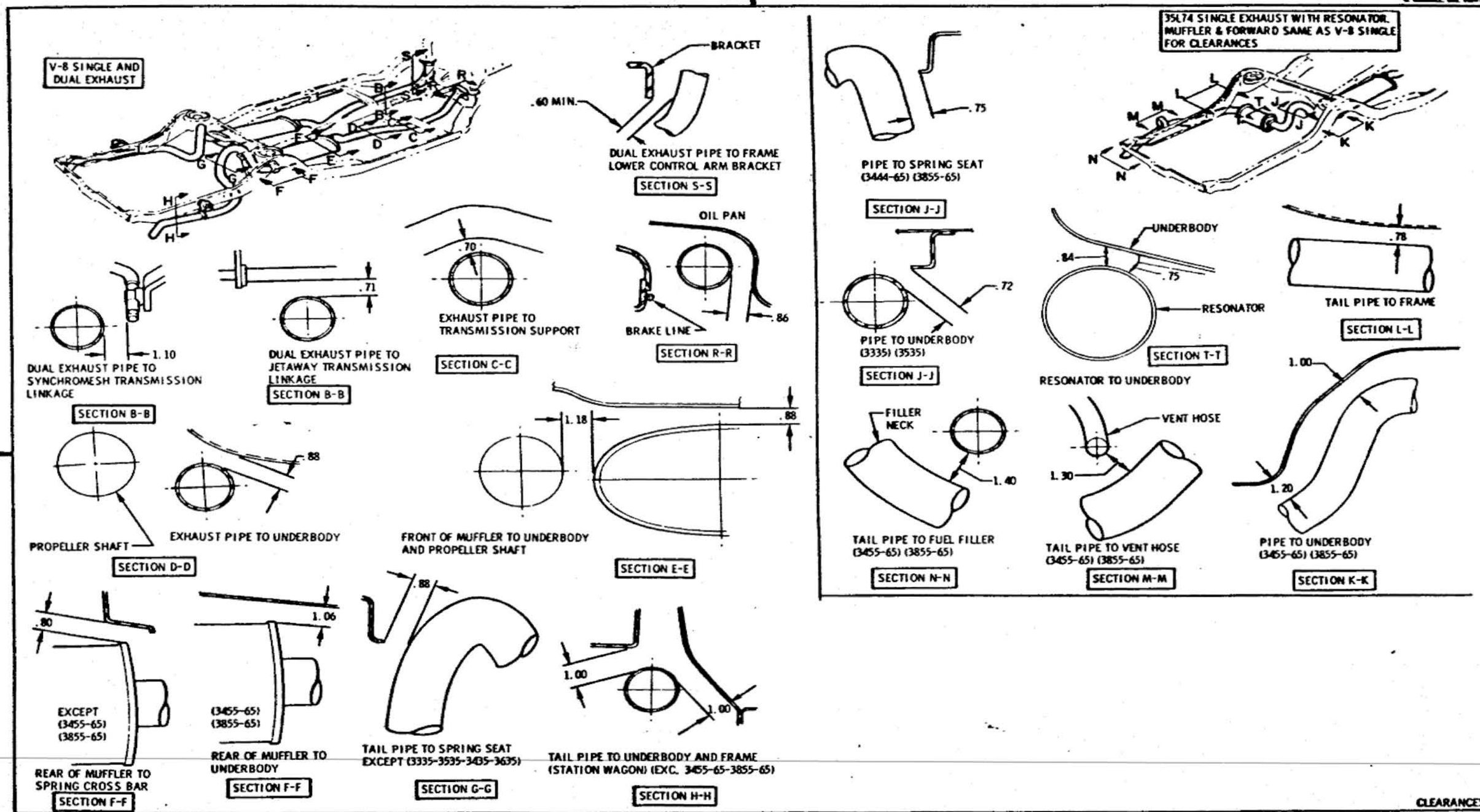

CLEARANCES

DATE	SYM	REVISION	DR.	CK.	DATE	SYM	REVISION	DR.	CK.	DATE	SYM	REVISION	DR.	CK.

INSTALLATION **EXHAUST SYSTEM**

DATE APRIL 1, 1965
DR. BY W. E. MASON
CHECKED
APPR.
APPR.

FIRST USED 1966 — Oldsmobile Service ILLUSTRATION

SERIES A — REF.

PAGE 8-3.6

PART NO. 589998

OLDSMOBILE PRODUCT INFORMATION MANUAL

9-STEERING

GROUP 9 - STEERING

391132 CHART-POWER STEERING INSTALL AND FILL PROCEDURE ---------- 9-1.2
391776 CHART-TAPE IDENTIFICATION (STEERING COLUMN) ---------- 9-1.3

DELUXE STEERING WHEEL ---------- 9-2.1
COLUMN ASSEMBLY FASTENINGS ---------- 9-2.2
WHEELS & LEVERS TO COLUMN ASSEMBLY ---------- 9-2.3
TILT-AWAY COLUMN ---------- 9-2.4
V8 MANUAL AND POWER STEERING GEAR AND HOSES ---------- 9-2.5
L-6 MANUAL AND POWER STEERING GEAR AND HOSES ---------- 9-2.6
STEERING COLUMN SWITCHES ---------- 9-2.7

POWER STEERING INSTALLATION AND FILL PROCEDURE

1. POWER STEERING GEAR TO BE INSTALLED ON FRAME WITH PLASTIC PLUGS IN PLACE.

   (A) NOTE: "E" ONLY - PITMAN ARM TO BE PREASSEMBLED TO GEAR 180-210 LB. FT. TORQUED PRIOR TO INSTALLATION ON FRAME.

2. DO NOT REMOVE PLASTIC PLUGS FROM STEERING GEAR UNTIL: (C)

   A. AFTER PITMAN ARM IS INSTALLED ON GEAR SPLINE. (B)

   B. A MINIMUM OF 15 SECONDS HAVE ELAPSED AFTER COMPLETING PITMAN ARM INSTALLATION. (B)

   C. IMMEDIATELY BEFORE INSTALLING THE HOSE ASSEMBLIES TO THE GEAR.

3. DO NOT CRANK THE GEAR UNTIL AFTER FILL OPERATION.

4. TIGHTEN HOSE ASSEMBLY FITTINGS ON GEAR AND POWER STEERING PUMP WITH 20-35 FT. LBS. TORQUE.

5. FILL POWER STEERING SYSTEM WITH A RECIRCULATING FILL SYSTEM USING POWER STEERING FLUID (9985010).

   FILL SYSTEM VACUUM IS NOT TO EXCEED 25" HG AND PRESSURE IS NOT TO EXCEED 35PSI AT POWER STEERING PUMP.

6. PUMP MUST BE FULL AND FILL SYSTEM RECIRCULATING WHEN THE PUMP IS INITIALLY ROTATED. OPERATE PUMP A MINIMUM OF 10 SECONDS BEFORE FILL SYSTEM IS REMOVED.

   A SPEED OF 900 TO 1000 RPM IS GENERALLY REQUIRED TO INSURE PUMP PRIME.

7. CHECK FLUID LEVEL AND ADD AS REQUIRED PRIOR TO TEST ROLLS (TO BE AT BOTTOM OF FILLER NECK WHEN COLD).

8. DO NOT CRANK STEERING WHEEL UNTIL FILL OPERATION IS COMPLETED AND LEVEL CHECKED.

9. CHECK HOSES AND FITTINGS FOR LEAKS.

10. INSPECT FLUID LEVEL AFTER ROLLS WHILE OIL IS HOT. ADJUST FLUID LEVEL, AS REQUIRED, TO WITHIN ± 1/2 INCH OF THE FLUID LEVEL MARK ON THE PUMP RESERVOIR FILLER NECK.

DATE	SYM	REVISION	DR.	CK.	DATE	SYM	REVISION	DR.	CK.	DATE	SYM	REVISION	DR.	CK.
										8-3-65	C	WAS 120-150 LB. FT.	CG	JF
										6-17-65	B	EFF. 39100 & 39600 REMOVED	JJ	JF
										6-17-65	A	NOTE ADDED	JJ	JF

CHART-POWER STEERING INSTALLATION & FILL PROCEDURE

DATE NOV. 3, 1964
DR. BY R.R. STANLAKE
CHECKED W.N. AMES
APPR. J.R. Linnell
APPR.

FIRST USED 1966

Oldsmobile Division ILLUSTRATION

SERIES A BC E

REF.

PAGE 0-1.2

PART NO. 391132

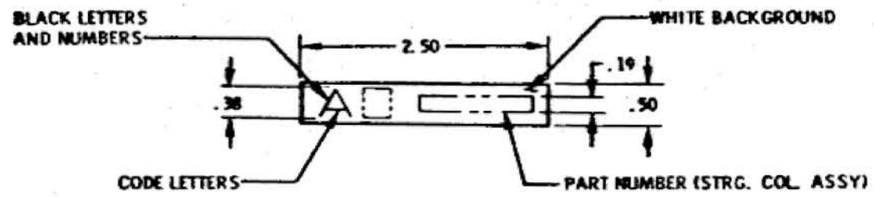

TYPICAL TAPE

	PT. NO.	CODE	TRANS.	TYPE	USAGE	YEAR
	391199	AP	SMT	COLUMN	OLDSMOBILE 6 & 8 (F-85) BUICK 6 & 8	1966
(F)	394512	AD	SMT	COLUMN	PONTIAC 6	1966
(G)	394514	AI	SMT	COLUMN	PONTIAC V8	1966
	391126	AE	AT	COLUMN	OLDSMOBILE 6 & 8 (F-85)	1966
	391882	AF	AT	COLUMN	BUICK 6 & 8	1966
(H)	394511	AL	AT	COLUMN	PONTIAC 6 & 8	1966
	388799	AQ	SMT	FLOOR	OLDSMOBILE 6 & 8 (F-85) BUICK 6 & 8	1966
(J)	394513	AJ	SMT	FLOOR	PONTIAC 6 & 8	1966
	387522	AG	AT	FLOOR	OLDSMOBILE 6 & 8 (F-85) BUICK 6 & 8	1966
	391104	AR	AT & SMT	FLOOR	BUICK 8	1966
(K)	394510	AM	AT	FLOOR	PONTIAC 6 & 8	1966
	386538	AT	SMT	COLUMN	OLDSMOBILE B/C	1966
	391693	AV	AT	COLUMN	OLDSMOBILE B/C	1966
	387702	AW	SMT & AT	FLOOR	OLDSMOBILE B/C	1966
	388190	AX	SMT	COLUMN	OLDSMOBILE B/C WITH CORNERING LIGHTS (TB7)	1966
	391694	AY	AT	COLUMN	OLDSMOBILE B/C WITH CORNERING LIGHTS (TB7)	1966

	PT. NO.	CODE	TRANS.	TYPE	USAGE	YEAR
	388192	AZ	SMT & AT	FLOOR	OLDSMOBILE B/C WITH CORNERING LIGHTS (TB7)	1966
	390297	AH	AT	COLUMN	OLDSMOBILE E	1966
	390547	AB	AT	COLUMN	OLDSMOBILE E WITH CORNERING LIGHTS (TB7)	1966
	5693470	SD	AT	COLUMN	OLDSMOBILE B/C T & T WHEEL	1966
	5695595	SU	SMT & AT	FLOOR	OLDSMOBILE B/C T & T WHEEL	1966
	5696714	SR	AT	COLUMN	OLDSMOBILE 6 & 8 (F-85) TILT WHEEL	1966
	5693760	SS	SMT & AT	FLOOR	OLDSMOBILE 6 & 8 (F-85) TILT WHEEL	1966
(A)	5695280	SE	AT	COLUMN	OLDSMOBILE E T & T WHEEL	1966
(E) (B)						
(C)	392800	AK	AT	COLUMN	BUICK GS SKYLARK	1966
(D)	387111	AN	SMT	COLUMN	OLDSMOBILE 8 (F-85) WITH M-13 HEAVY DUTY TRANS	1966

DATE	SYM	REVISION	DR.	CK.	DATE	SYM	REVISION	DR.	CK.	DATE	SYM	REVISION	DR.	CK.
					DEC 65	K	WAS 391274	RES	JA	7-1-65	C	392098 REMOVED	GS	JA
					DEC 65	J	WAS 391277	RES	JA	5-25-65	D	COLUMN ASSY ADDED	RES	JA
					DEC 65	H	WAS 391275	RES	JA	9-1-65	C	COLUMN ASSY ADDED	RES	JA
					DEC 65	G	WAS 391278	RES	JA	9-9-65	B	COLUMN ASSY ADDED	RES	JA
					DEC 65	F	WAS 391276	RES	JA	12-9-65	A	CODE LETTERS ADDED	RES	JA

CHART — TAPE IDENTIFICATION (STEERING COLUMN)

DATE JANUARY 8, 1965
DR. BY R.R. STANLAKE
CHECKED E. SANFORD
APPR. J.R. [illegible]
APPR. [illegible]

FIRST USED 1966
Oldsmobile GRAPHIC ILLUSTRATION
SERIES A-B-C-E
REF. 388188 9-7.1
PAGE 9-1.3
PART NO. 391776

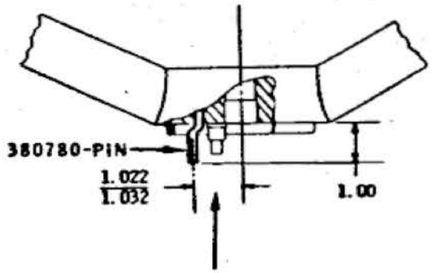

INSTALLATION - TURN SIGNAL CANCELLING PIN

(TILT WHEEL ONLY)

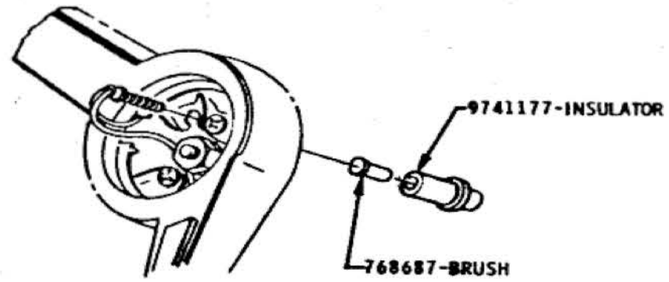

INSTALLATION HORN CONTACT

(TILT WHEEL ONLY)

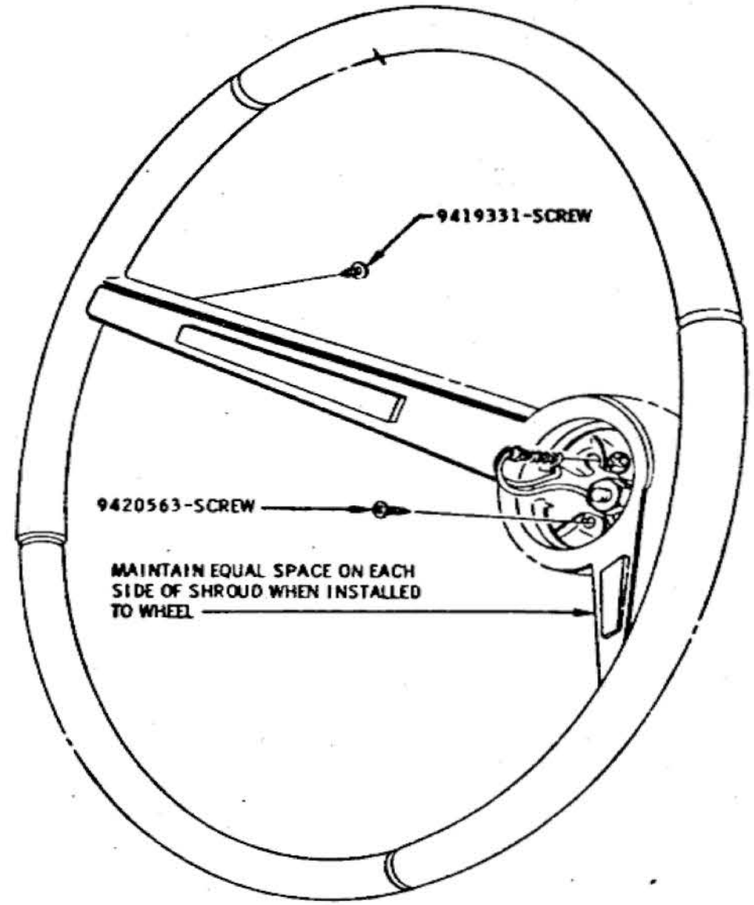

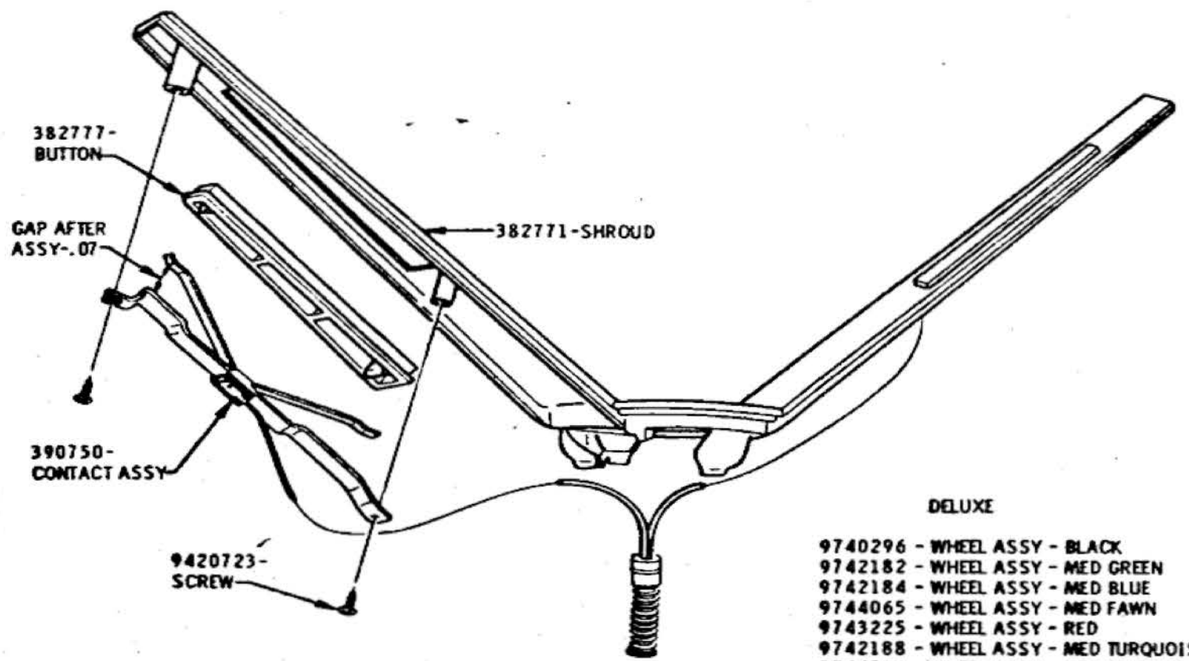

DELUXE

9740296 - WHEEL ASSY - BLACK
9742182 - WHEEL ASSY - MED GREEN
9742184 - WHEEL ASSY - MED BLUE
9744065 - WHEEL ASSY - MED FAWN
9743225 - WHEEL ASSY - RED
9742188 - WHEEL ASSY - MED TURQUOISE
9744066 - WHEEL ASSY - MED BRONZE

DELUXE STEERING WHEEL

DATE	SYM	REVISION	DR.	CK.	DATE	SYM	REVISION	DR.	CK.	DATE	SYM	REVISION	DR.	CK.
										7-28-65	A	REDRAWN		

INSTALLATION **STEERING**

DATE MARCH 10, 1965 | FIRST USED 1966 | Oldsmobile ILLUSTRATION | PAGE 9-21

DR. BY GOODWIN | CHECKED | APPR. | APPR. | SERIES A | REF. | PART NO. 589998

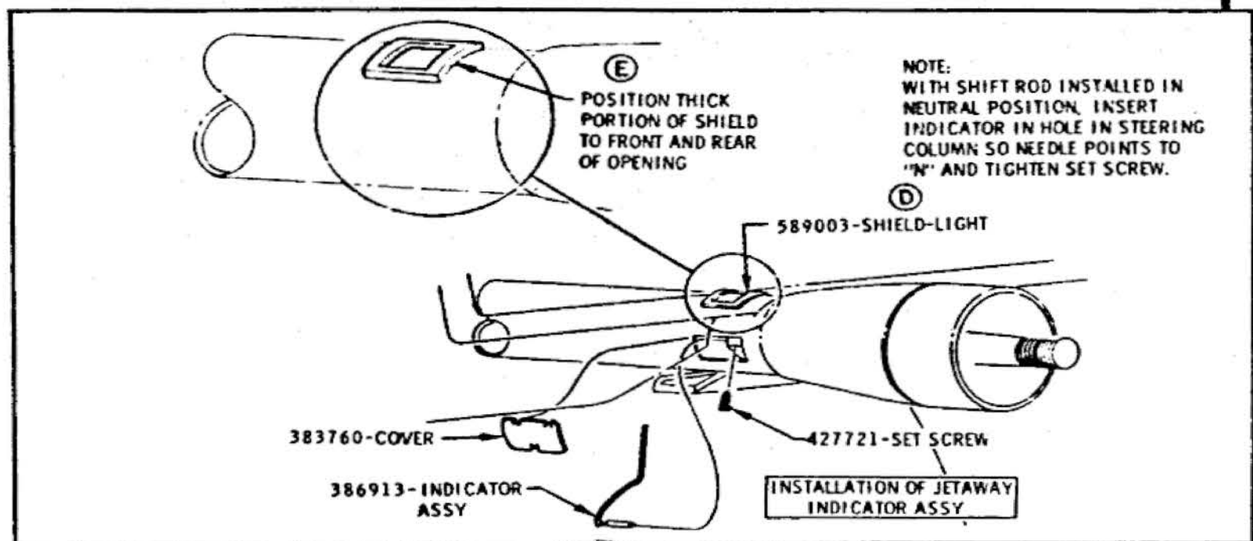

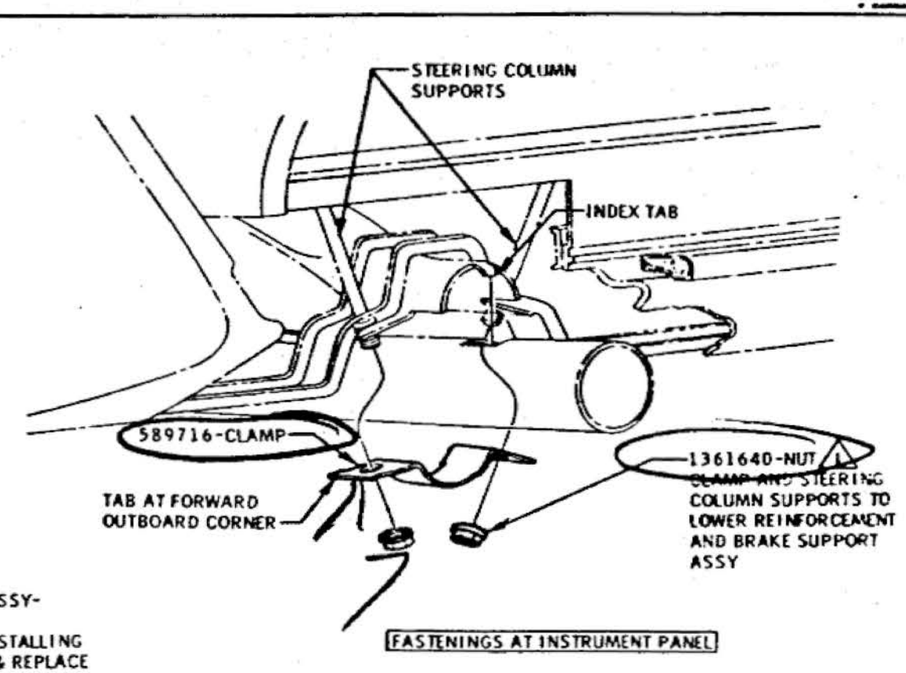

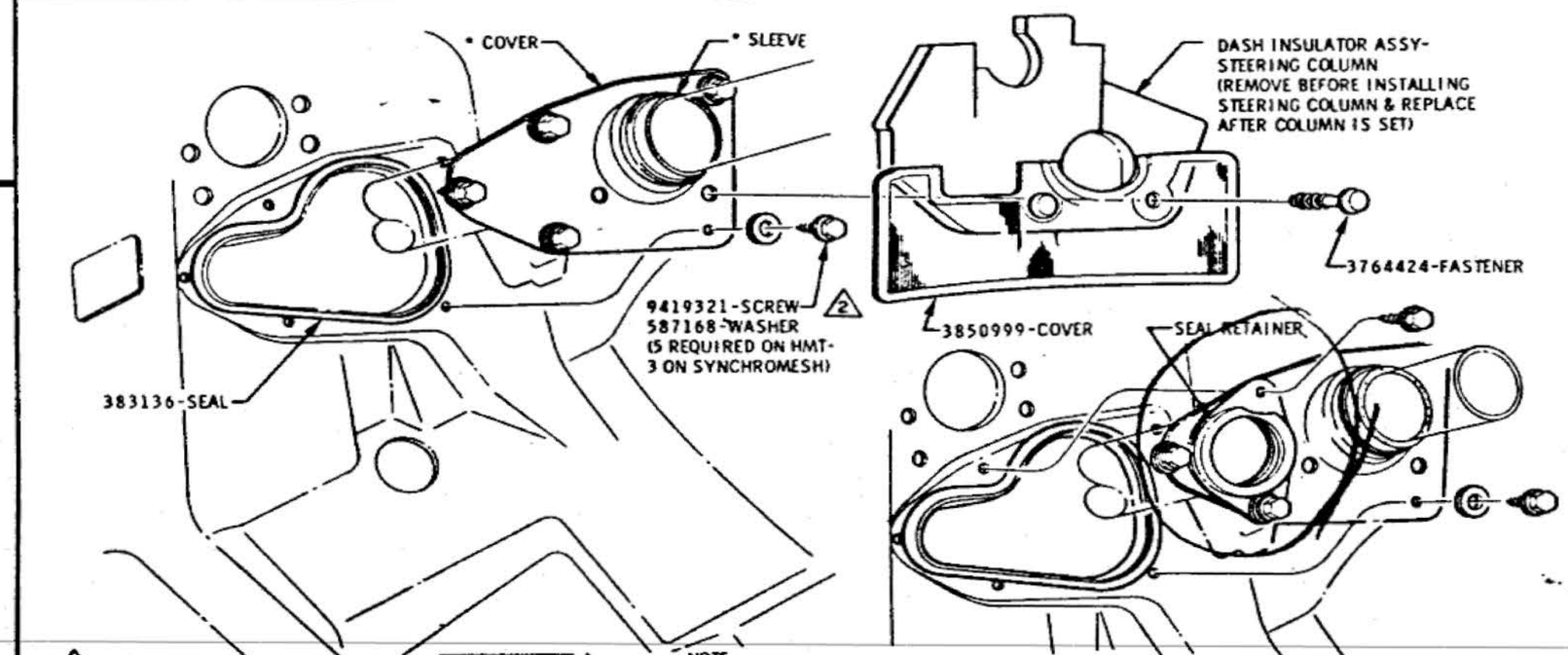

1 20-25 LB. FT.
2 36-60 LB. IN.
3 12-18 LB. IN.

NOTE:
ALL PART NAMES MARKED WITH AN ASTERISK * ARE PART OF STEERING COLUMN ASSEMBLIES

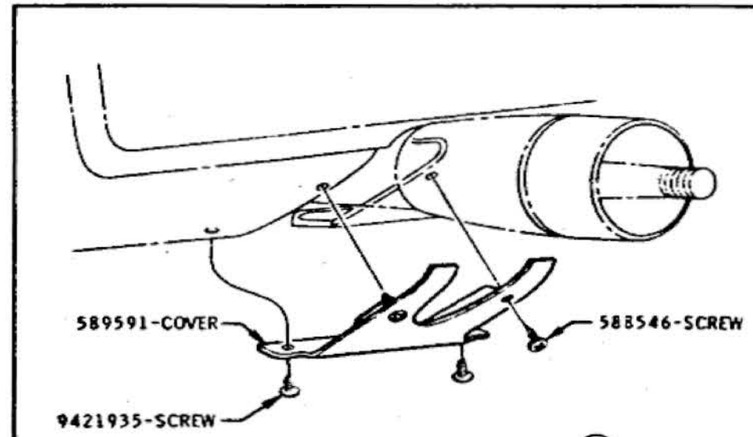

Ⓕ
(35, 36, & 3800)
INSTALLATION OF LOWER STEERING COLUMN COVER

FASTEN COVER TO INSTRUMENT PANEL AT THE BOTTOM AND USE EXISTING HOLES IN TOP OF COVER AS A GAGE, DRILL TWO .120 DIA. HOLES

COLUMN ASSEMBLY FASTENINGS

DATE	SYM	REVISION	DR.	CK.	DATE	SYM	REVISION	DR.	CK.	DATE	SYM	REVISION	DR.	CK.
										1-4-66	E	NOTE REVISED		
										11-24-65	D	WAS SEAL		
										11-10-65	C	WAS 322713 SEAL		
										10-1-65	B	VIEW ADDED		
					2-25-66	F	MOVES ADDED			7-28-65	A	REDRAWN		

INSTALLATION **STEERING**
DATE MARCH 12, 1965
DR. BY GOODWIN
CHECKED
APPR.
APPR.
FIRST USED 1966
Oldsmobile ILLUSTRATION
SERIES A
REF.
PAGE 9-2.2
PART NO. 589998

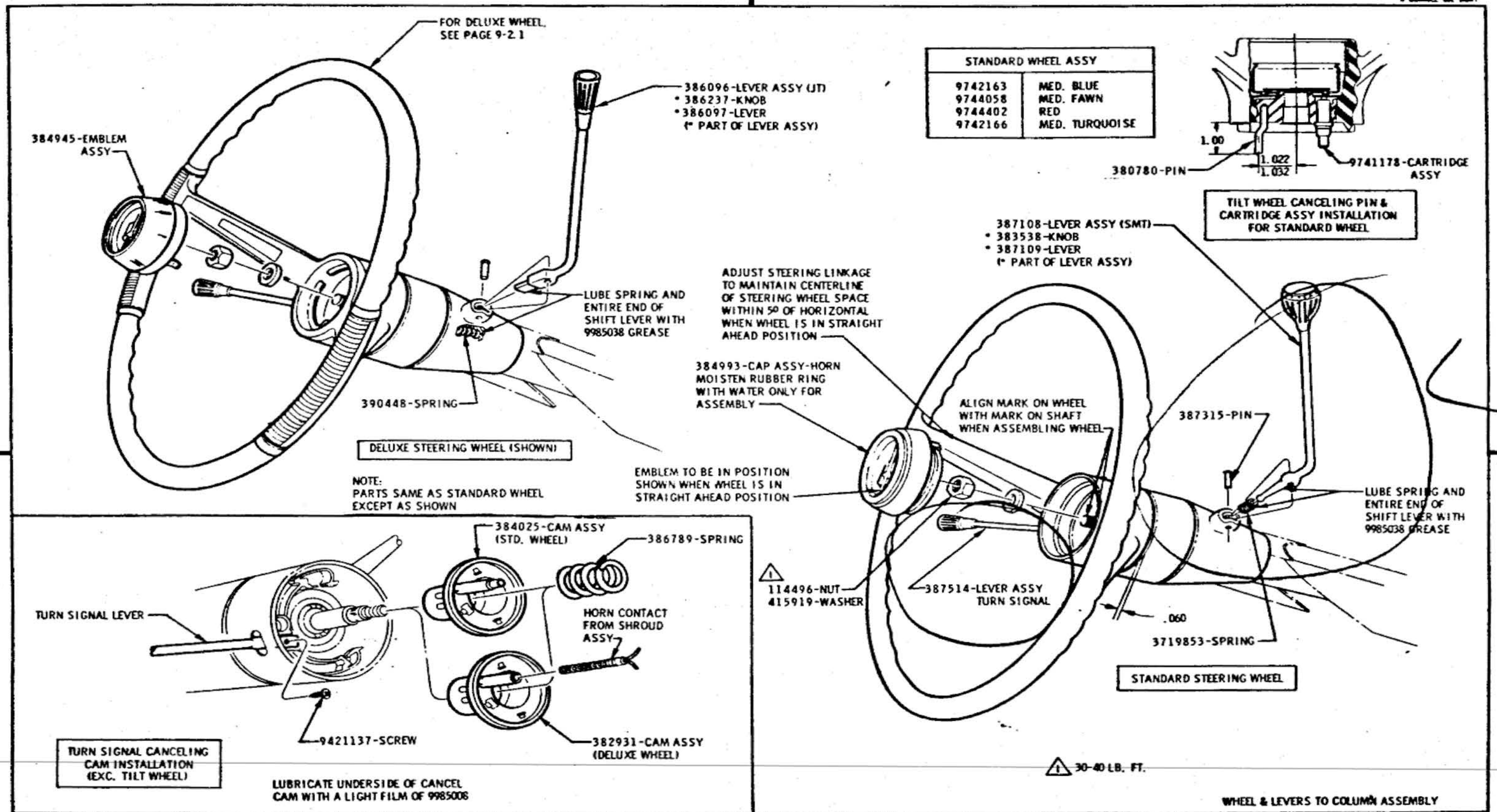

DATE	SYM	REVISION	DR.	CK.	DATE	SYM	REVISION	DR.	CK.	DATE	SYM	REVISION	DR.	CK.
										7-20-65	A	REDRAWN		

INSTALLATION	STEERING		
DATE MARCH 10, 1965	FIRST USED 1966	Oldsmobile Service ILLUSTRATION	PAGE 9-2.3
DR. BY GOODWIN			
CHECKED	SERIES A	REF.	PART NO. 589998
APPR.			
APPR.			

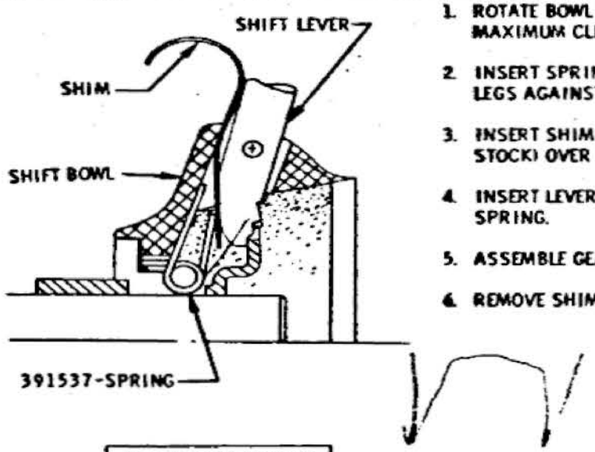

SHIFT LEVER SPRING INSTALLATION

1. ROTATE BOWL TO NORMAL DRIVE RANGE TO PROVIDE MAXIMUM CLEARANCE BETWEEN LEVER AND LOCK PLATE.
2. INSERT SPRING WITH COILS INNERMOST AND WITH OPEN LEGS AGAINST BACK SURFACE OF BOWL.
3. INSERT SHIM (APPROX. .040 THICK X .38 WIDE SPRING STOCK) OVER CENTRAL LEG OF SPRING.
4. INSERT LEVER OVER TOP OF SHIM, THEREBY COMPRESSING SPRING.
5. ASSEMBLE GEARSHIFT LEVER PIVOT PIN.
6. REMOVE SHIM.

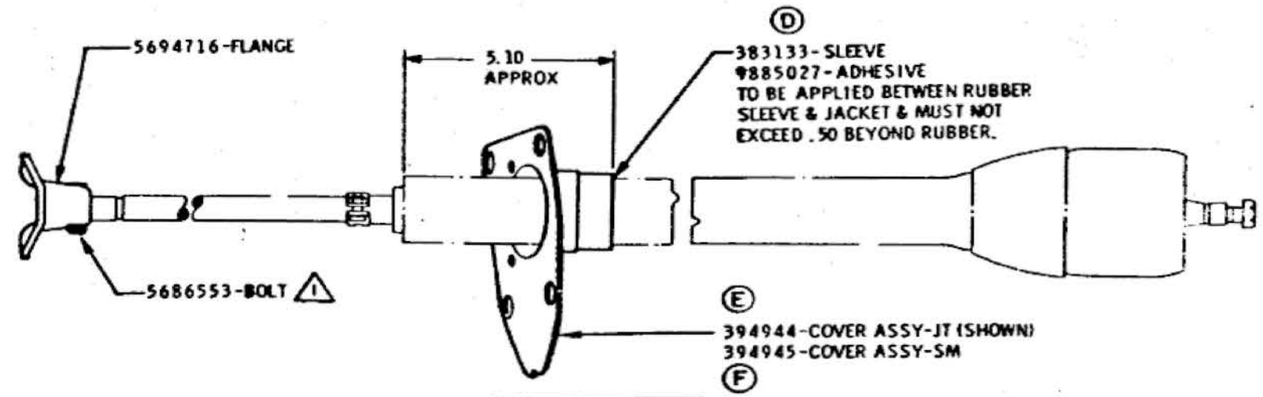

STEERING COLUMN SUB-ASSEMBLY

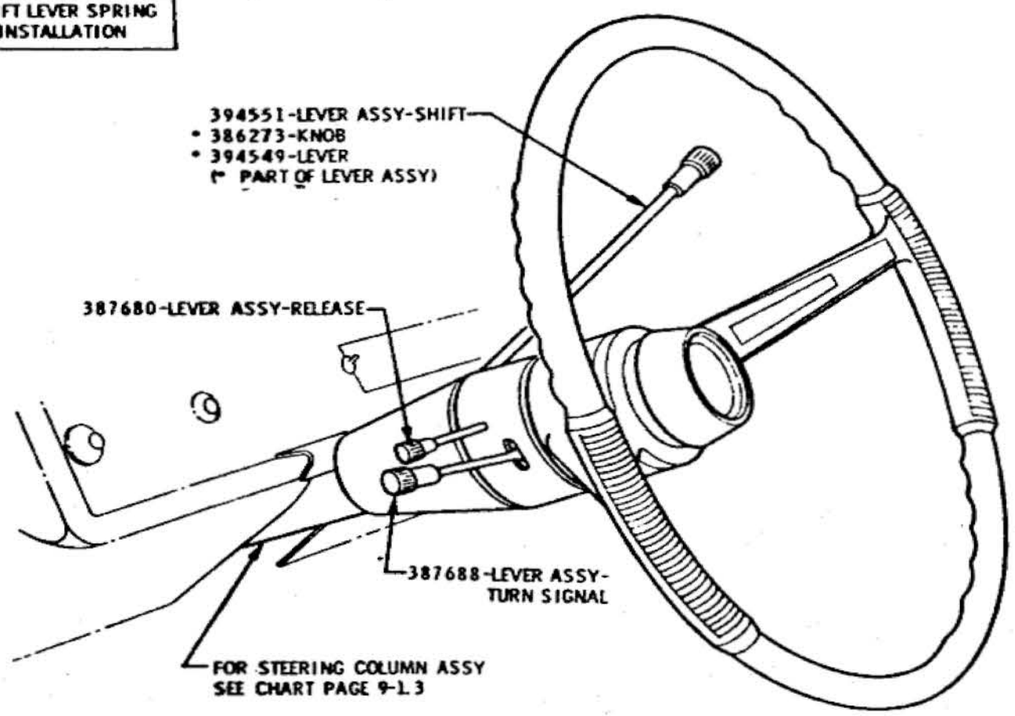

△1 25-35 LB. FT.
△2 36-60 LB. IN.

VIEW INDICATING NORMAL POSITION

TILT-AWAY COLUMN

DATE	SYM	REVISION	DR.	CK.	DATE	SYM	REVISION	DR.	CK.	DATE	SYM	REVISION	DR.	CK.
										12-16-65	E	WAS 383139		
										12-1-65	D	ADHESIVE & NOTE ADDED		
										10-7-65	C	PART NUMBER REVISED		
										9-17-65	B	VIEWS REMOVED		
					12-16-65	F	WAS 384255			7-28-65	A	REDRAWN		

INSTALLATION STEERING

DATE MARCH 12, 1965
DR. BY GOODWIN
CHECKED
APPR.
APPR.

FIRST USED 1966 — Oldsmobile Graphic Illustration

SERIES A — REF. — PAGE 9-2.4 — PART NO. 589998

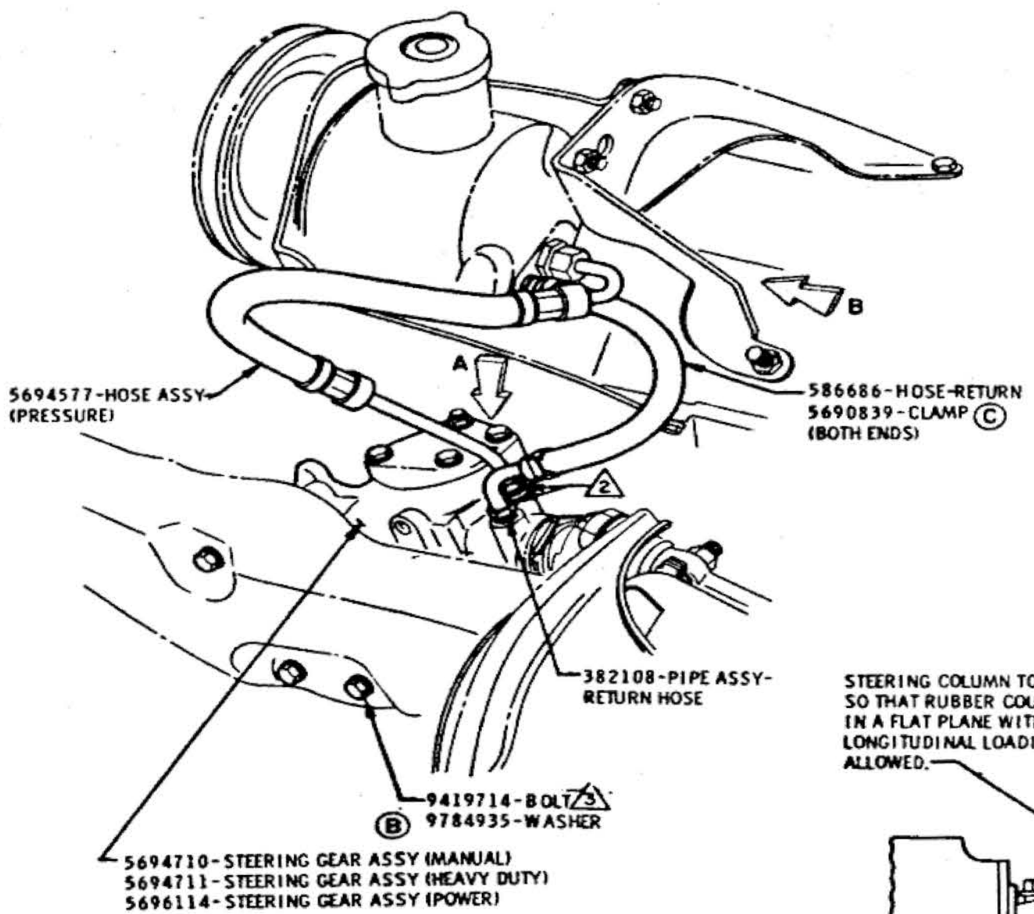

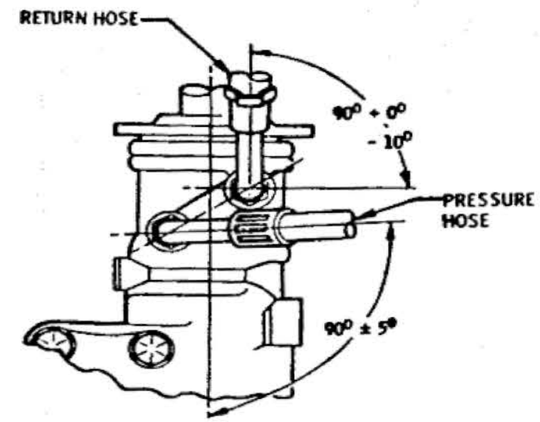

VIEW A

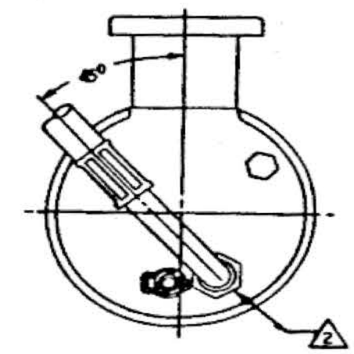

VIEW B

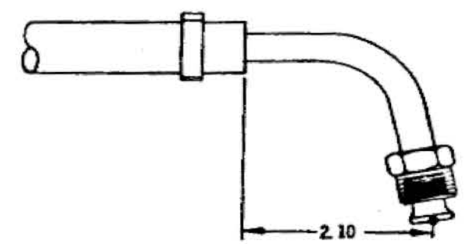

HOSE INSTALLATION DIMENSIONS FOR RETURN LINE

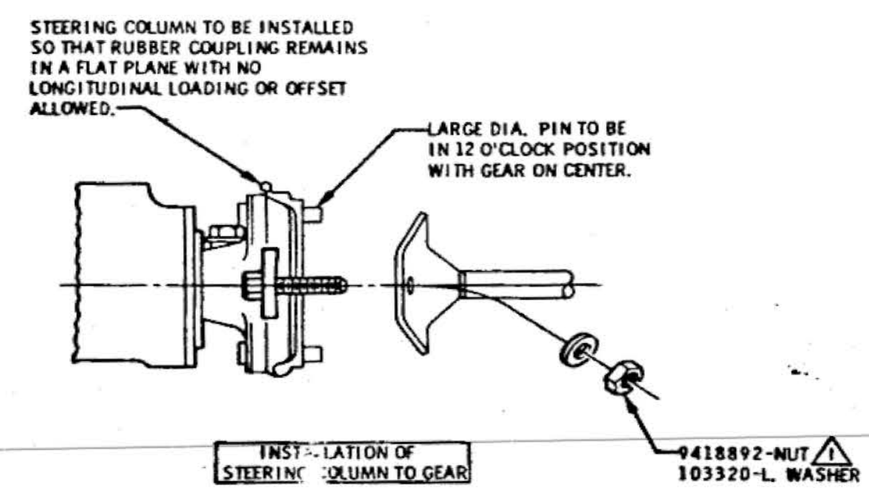

INSTALLATION OF STEERING COLUMN TO GEAR

1 15-20 LB. FT.
2 20-35 LB. FT.
3 60-80 LB. FT.

V8 MANUAL & POWER STEERING GEAR & HOSES

DATE	SYM	REVISION	DR.	CK.	DATE	SYM	REVISION	DR.	CK.	DATE	SYM	REVISION	DR.	CK.
										4-25-66	C	WAS 18096 CLAMP ASSY		
										1-28-66	B	WAS 193463-WASHER		
										7-22-65	A	REDRAWN		

INSTALLATION STEERING

DATE MARCH 22, 1965 | FIRST USED 1966 | Oldsmobile Service ILLUSTRATION | PAGE 9-2.5

DR. BY ED ROE | CHECKED | APPR. | APPR.

SERIES A | REF. | PART NO. 589998

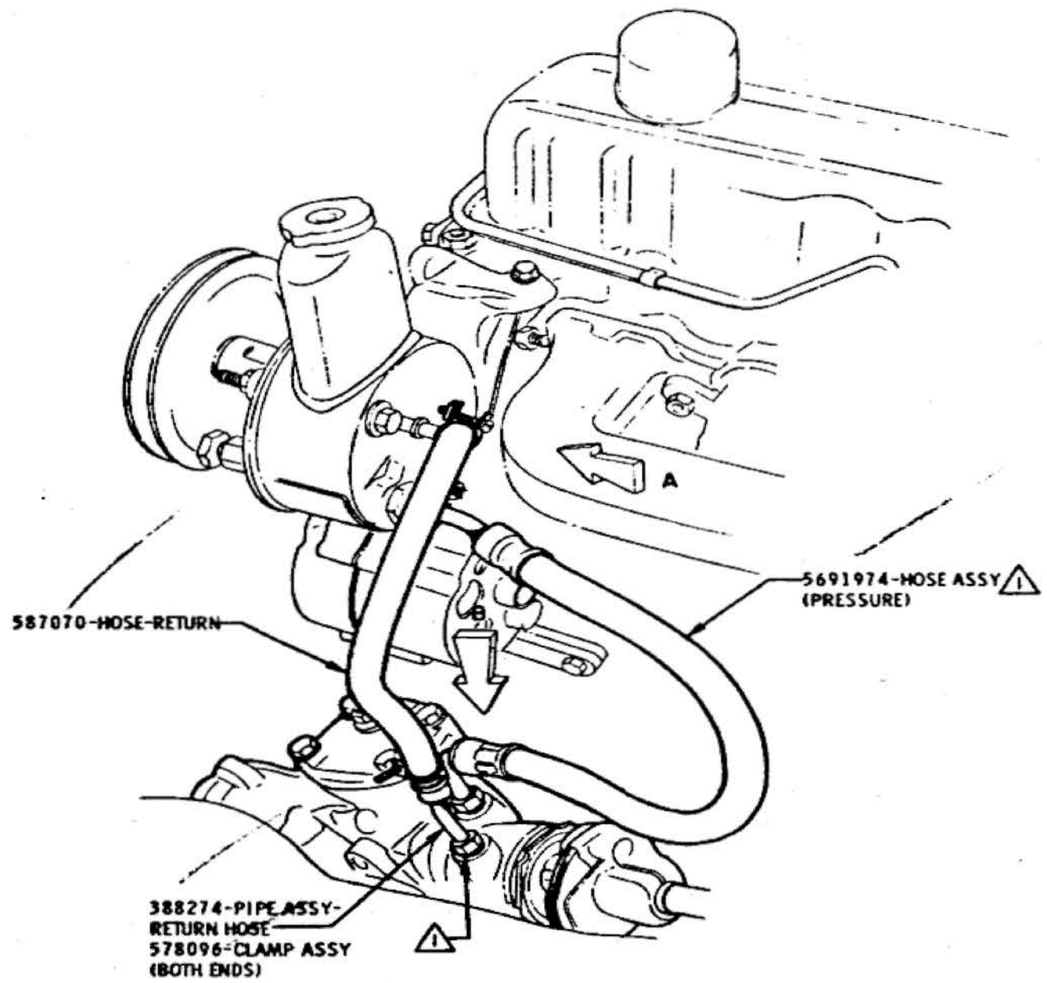

HOSE ROUTING

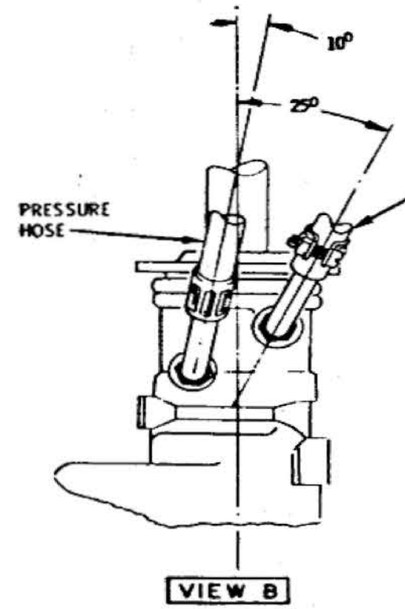

VIEW B

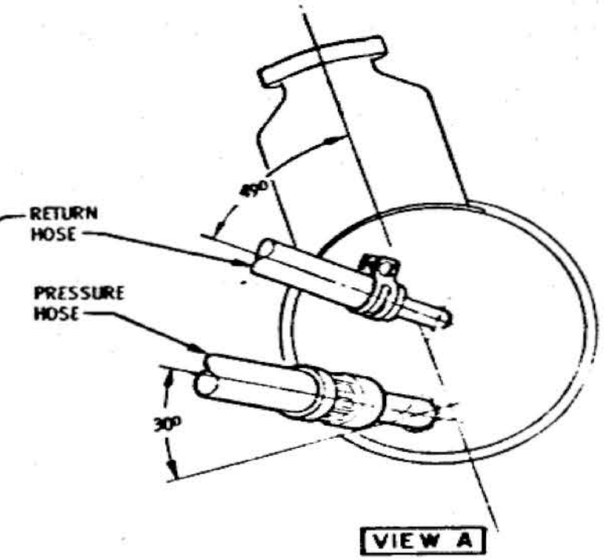

VIEW A

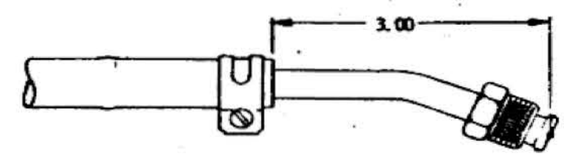

HOSE INSTALLATION DIMENSIONS FOR RETURN LINE

1 20-35 LB. FT.

FOR STEERING GEAR & COLUMN TO GEAR FASTENING SEE PAGE 9-2.5

L-6 MANUAL & POWER STEERING GEAR & HOSES

DATE	SYM	REVISION	DR.	CK.	DATE	SYM	REVISION	DR.	CK.	DATE	SYM	REVISION	DR.	CK.
										52665	A	REVISED & REDRAWN		

INSTALLATION **STEERING**

DATE MARCH 22, 1965 — DR. BY Ed Roe — CHECKED M Bonnhart — APPR. [illegible] — APPR. [illegible]

FIRST USED **1966** — Oldsmobile Service ILLUSTRATION

SERIES A — REV.

PAGE 9-2.6

PART NO. **589998**

ADJUSTMENT OF SWITCH

POSITION TRANSMISSION IN DRIVE DETENT WITH SHIFT LINKAGE PROPERLY ADJUSTED. ALIGN SLOT IN CONTACT SUPPORT WITH HOLE IN SWITCH BRACKET USING .090 PIN. PLACE CONTACT SUPPORT DRIVE SLOT OVER TANG ON SHIFT TUBE AND TIGHTEN MOUNTING SCREWS. REMOVE .090 PIN.

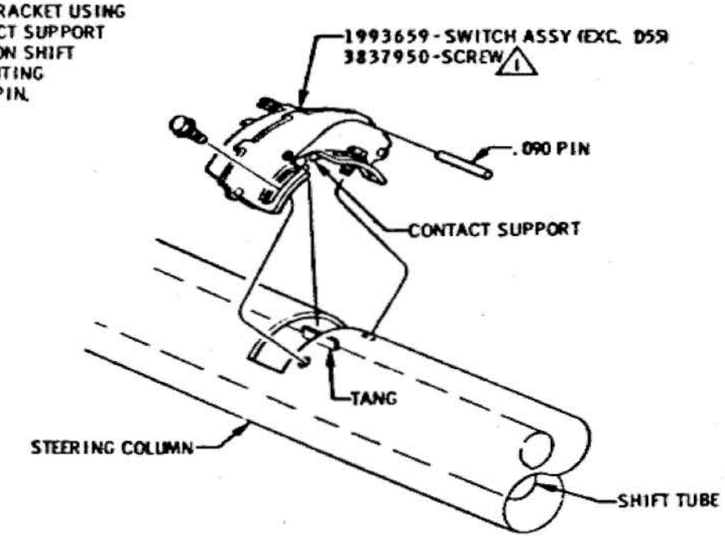

NEUTRAL SAFETY & BACK-UP LAMP SWITH TO COLUMN

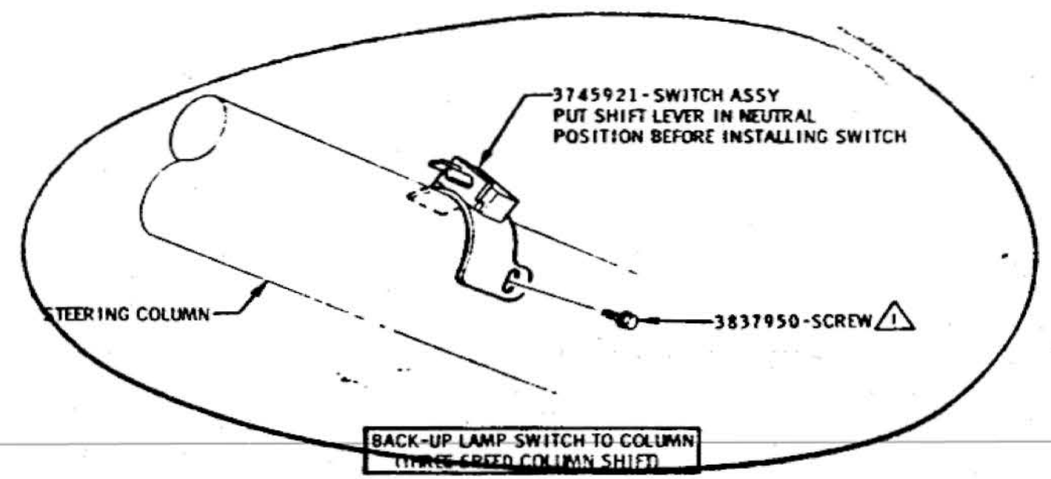

BACK-UP LAMP SWITCH TO COLUMN (THREE SPEED COLUMN SHIFT)

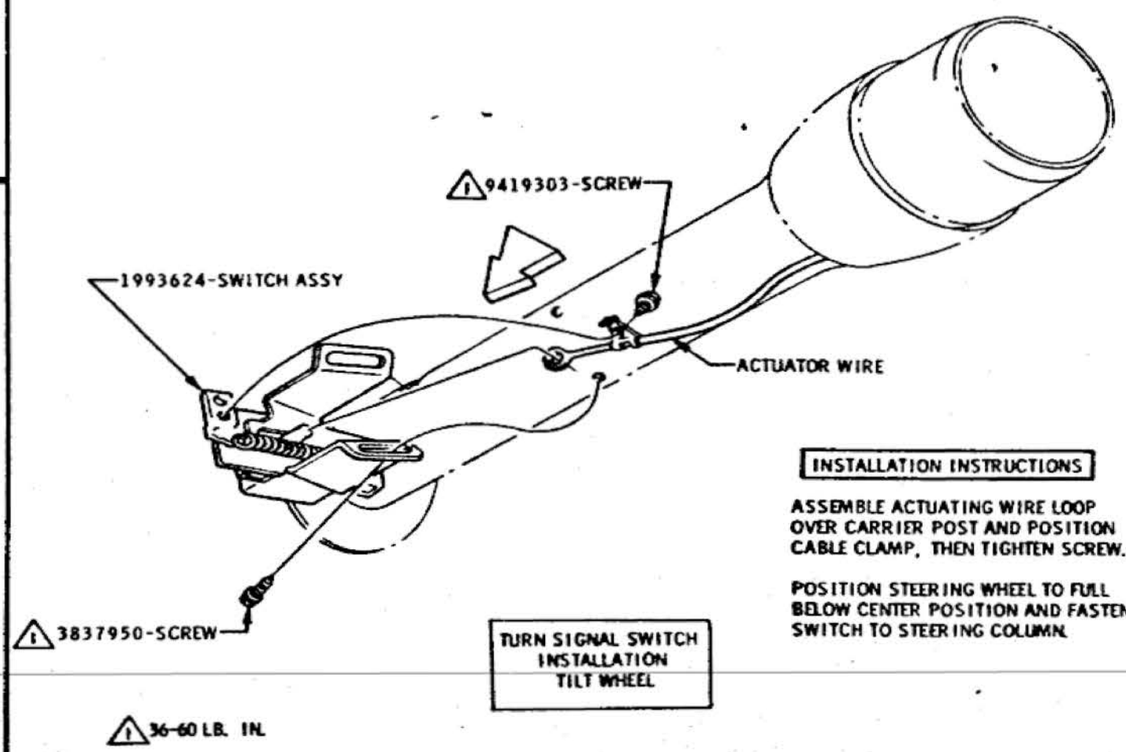

TURN SIGNAL SWITCH INSTALLATION TILT WHEEL

INSTALLATION INSTRUCTIONS

ASSEMBLE ACTUATING WIRE LOOP OVER CARRIER POST AND POSITION CABLE CLAMP, THEN TIGHTEN SCREW.

POSITION STEERING WHEEL TO FULL BELOW CENTER POSITION AND FASTEN SWITCH TO STEERING COLUMN.

(STEERING COLUMN SWITCHES)

DATE	SYM	REVISION	DR.	CK.	DATE	SYM	REVISION	DR.	CK.	DATE	SYM	REVISION	DR.	CK.

INSTALLATION STEERING

DATE SEPTEMBER 21, 1965 | DR. BY W.E. MASON | CHECKED M.J. Barnhart | APPR. R.H.C. | APPR.

FIRST USED 1966 | Oldsmobile Service ILLUSTRATION | SERIES A | REF. | PAGE 9-2.7 | PART NO. 589998

OLDSMOBILE PRODUCT INFORMATION MANUAL

10 WHEELS & TIRES

GROUP 10-WHEELS & TIRES

391926 CHART-TIRE USAGE (SHEET 1)----------10-1.2
391926 CHART-TIRE USAGE (SHEET 2)----------10-1.3

SPARE WHEEL AND JACK STOWAGE-CHROME WHEEL---------- 10-2.1
SPARE WHEEL AND JACK STOWAGE (2 & 3 SEAT STATION WAGON)---------- 10-2.2
SPARE WHEEL AND JACK STOWAGE (EXC. STATION WAGON)----------10-2.3
SPARE TIRE AND WHEEL LOCK---------- 10-2.4
391080 DELUXE WHEEL DISC ASSEMBLY (FIRST TYPE)----------10-2.5
394385 DELUXE WHEEL DISC ASSEMBLY (SECOND TYPE)----------10-2.5A
CHROME WHEEL & ORNAMENT ASSEMBLY---------- 10-2.6
WHEELS & TIRES---------- 10-2.7

OLDSMOBILE DIVISION GENERAL MOTORS CORPORATION LANSING — MICHIGAN

	Ⓑ EXPORT OPTION						DOMESTIC OR EXPORT																	
SERIES	W32 EXC. W29	P18 & C60	P18	P16 & W29	P16 & C60	P16	W29 & P26	W29	T17 & C60	T17	T15 & C60	T15	P27 & C60	P27	P28 & C60	P28	P30 & C60	P30	P29 & C60	P29	P26 & C60	P26	C60	STD.
33307 33369	--	--	NY	--	NY	MY	--	--	--	--	PE	PE	UY	UY	IY	IY	--	NR	--	BR	NR	MR	BR	AR
33335	--	--	--	--	PY	PY	--	--	--	--	PE	PE	UY	UY	IY	IY	--	--	--	--	PR	PR	CR	CR
33407	ZY	--	PY	PY	PY	NY	PR	ZY	--	--	PE	PE	UY	UY	IY	IY	--	PR	--	CR	PR	NR	CR	BR
33435	--	--	--	--	PY	PY	--	--	--	--	PE	PE	UY	UY	IY	IY	--	--	--	--	PR	PR	CR	CR
33455 33465	--	--	--	--	RY	RY	--	--	RE	RE	--	--	--	--	--	--	--	--	--	--	RR	RR	DR	DR
33469	ZY	--	PY	--	PY	NY	--	--	--	--	PE	PE	UY	UY	IY	IY	--	PR	--	CR	PR	NR	CR	BR
33517 33539 33569	--	--	NY	--	NY	MY	--	--	--	--	PE	PE	UY	UY	IY	IY	--	NR	--	BR	NR	MR	BR	AR
33535	--	--	--	--	PY	PY	--	--	--	--	PE	PE	UY	UY	IY	IY	--	--	--	--	PR	PR	CR	CR
33617	ZY	--	PY	PY	PY	NY	PR	ZY	--	--	PE	PE	UY	UY	IY	IY	--	PR	--	CR	PR	NR	CR	BR
33639 33669	ZY	--	PY	--	PY	NY	--	--	--	--	PE	PE	UY	UY	IY	IY	--	PR	--	CR	PR	NR	CR	BR
33635	--	--	--	--	PY	PY	--	--	--	--	PE	PE	UY	UY	IY	IY	--	--	--	--	PR	PR	CR	CR
33807 33817	ZY	--	PY	PY	PY	NY	PR	ZY	--	--	PE	PE	UY	UY	IY	IY	--	PR	--	CR	PR	NR	CR	BR
33839 33869	ZY	--	PY	--	PY	NY	--	--	--	--	PE	PE	UY	UY	IY	IY	--	PR	--	CR	PR	NR	CR	BR
33855 33865	--	--	--	--	RY	RY	--	--	RE	RE	--	--	--	--	--	--	--	--	--	--	RR	RR	DR	DR
33867	ZY	--	PY	PY	PY	NY	PR	ZY	--	--	PE	PE	--	--	--	--	--	PR	--	CR	PR	NR	CR	BR

-- INDICATES THAT THE CONDITIONS SHOWN ARE NOT AVAILABLE.

& INDICATES TOGETHER WITH OPTION SHOWN.

TO READ CHART:

READING CHART FROM LEFT TO RIGHT, THE FIRST OPTION REACHED THAT IS COMPLETELY SATISFIED WILL INDICATE THE TIRE CODE TO BE USED ON THAT MODEL. IF NONE OF THE CONDITIONS ABOVE ARE SATISFIED, THE LAST COLUMN IS STANDARD CAR (LESS ALL OPTIONS SHOWN TO THE LEFT OF IT) AND WILL INDICATE THE TIRE CODE TO BE USED. PROCEED TO THE CORRELATION CHART (SHOWN ON SHEET 2) TO FIND THE PART NUMBER, SIZE, PLY, COLOR AND TYPE OF TIRE FOR THAT CODE.

C60 IS AIR CONDITIONING
P16 IS FIRESTONE "500" TIRES
P18 IS FIRESTONE "500" OVERSIZE
P26 IS WHITEWALL TIRES
P27 IS 15" WHEEL & TIRE - W/W
P28 IS 15" WHEEL & TIRE - B/W
P29 IS OVERSIZE TIRES - B/W
P30 IS OVERSIZE TIRES - W/W
T15 IS 8-PLY 7.35 X 14 TIRES
T17 IS 8-PLY 8.25 X 14 TIRES
W29 IS "442" PERFORMANCE OPTION
W32 IS EXPORT WHEEL & TIRE OPTION (7.75 X 14 RED STRIPE)

©

SHEET 1 OF 2

DATE	SYM	REVISION	DR.	CK.	DATE	SYM	REVISION	DR.	CK.	DATE	SYM	REVISION	DR.	CK.
										3-27-66	C	NOTE REMOVED		
										3-15-66	B	W32 OPT. ADDED	CG	
										10-20-65	A	FORMAT REVISED	JKG	C

CHART- TIRE USAGE

DATE OCT. 19, 1965
DR. BY J. L. GRAY
CHECKED
APPR.
APPR.

FIRST USED 1966

Oldsmobile Classic ILLUSTRATION

SERIES A

REF.

PAGE 10-1.2

PART NO. 391926

CODE	(K) PART NUMBERS U. S. ROYAL	FIRESTONE	GOODRICH	GOODYEAR	TIRE SIZE	PLY ACTUAL	PLY RATING	WALL COLOR	CORD TYPE
AR	3904290	3867557	3867653	3867621	6.95 X 14	2	4	BLACK	RAYON
BR	3904294	3867565	3867661	3867629	7.35 X 14	2	4	BLACK	RAYON
CR	3904298	3867573	3867669	3867637	7.75 X 14	2	4	BLACK	RAYON
DR	396932	390002	390003	(B) 390004	8.25 X 14	2	4	BLACK	RAYON
IY		1371502			7.75 X 15	4	4	BLACK	NYLON
MR	3904292	3883500	3883503	3883502	6.95 X 14	2	4	WHITE	RAYON
MY		(C) 3883505			6.95 X 14	4	4	WHITE	NYLON
NR	3904296	3883510	3883513	3883512	7.35 X 14	2	4	WHITE	RAYON
NY		(D) 3883515			7.35 X 14	4	4	WHITE	NYLON
PR	3904300	3883525	3883528	3883527	7.75 X 14	2	4	WHITE	RAYON
PY		(E) 3883520			7.75 X 14	4	4	WHITE	NYLON
PE	3883536		3883538		7.75 X 14	4	8	WHITE	RAYON
RR	396934	392101	392102	(B) 392103	8.25 X 14	2	4	WHITE	RAYON
RY	(F)	(G) 392111			8.25 X 14	4	4	WHITE	NYLON
RE				393888	8.25 X 14	4	8	WHITE	RAYON
ZY	(J) 9785686	9780804		9780803	7.75 X 14	2	4	RED	NYLON
(H) UY		1371503			7.75 X 15	4	4	WHITE	NYLON

BLACKWALL

A - 6.95 X 14
B - 7.35 X 14
C - 7.75 X 14
D - 8.25 X 14
I - 7.75 X 15

WHITEWALL

M - 6.95 X 14
N - 7.35 X 14
P - 7.75 X 14
R - 8.25 X 14
U - 7.75 X 15
Z - SPECIAL TIRES 7.75 X 14 REDWALL

TIRE CODE:
FIRST LETTER DETERMINES TIRE SIZE & WALL COLOR.
SECOND LETTER DETERMINES PLY OR CORD TYPE.
R - RAYON
Y - NYLON
E - 4-PLY 8-PLY RATING TIRES

SHEET 2

DATE	SYM	REVISION	DR.	CK.	DATE	SYM	REVISION	DR.	CK.	DATE	SYM	REVISION	DR.	CK.
					4-6-66	K	U.S. ROYAL NO'S REVISED			10-26-65	E	WAS 3867422		
					2-23-66	J	9785686 ADDED			12-26-65	D	WAS 3867414		
					2-23-66	H	9780802 REMOVED			10-26-65	C	WAS 3867406		
					10-26-65	G	392111 RELOCATED			10-26-65	B	GOODYEAR TIRES ADDED		
					10-26-65	F	WAS 3883539			10-26-65	A	FORMAT REVISED		

CHART— TIRE USAGE

DATE OCT. 19 1965
DR. BY J.C. GRAY
CHECKED
APPR.
APPR.

FIRST USED 1966

Oldsmobile GRAPHIC ILLUSTRATION

SERIES A

REF.

PAGE 10-1.3

PART NO. 391926

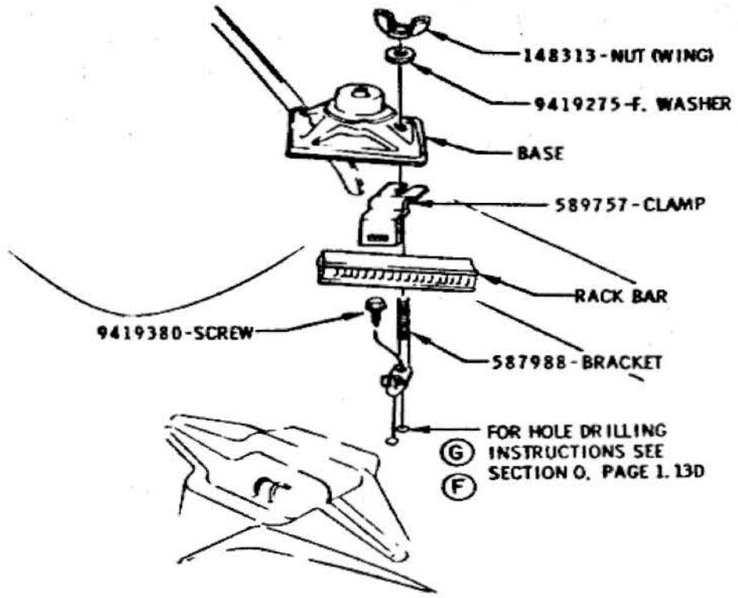

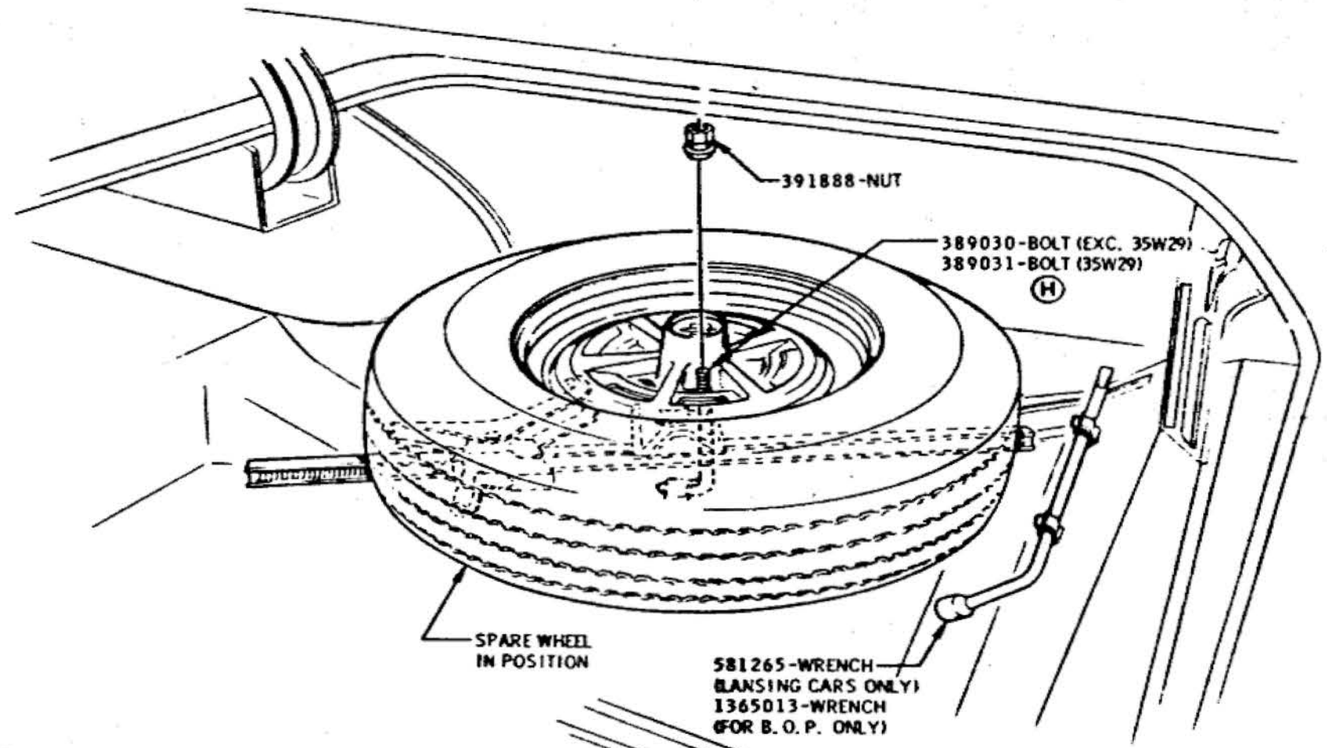

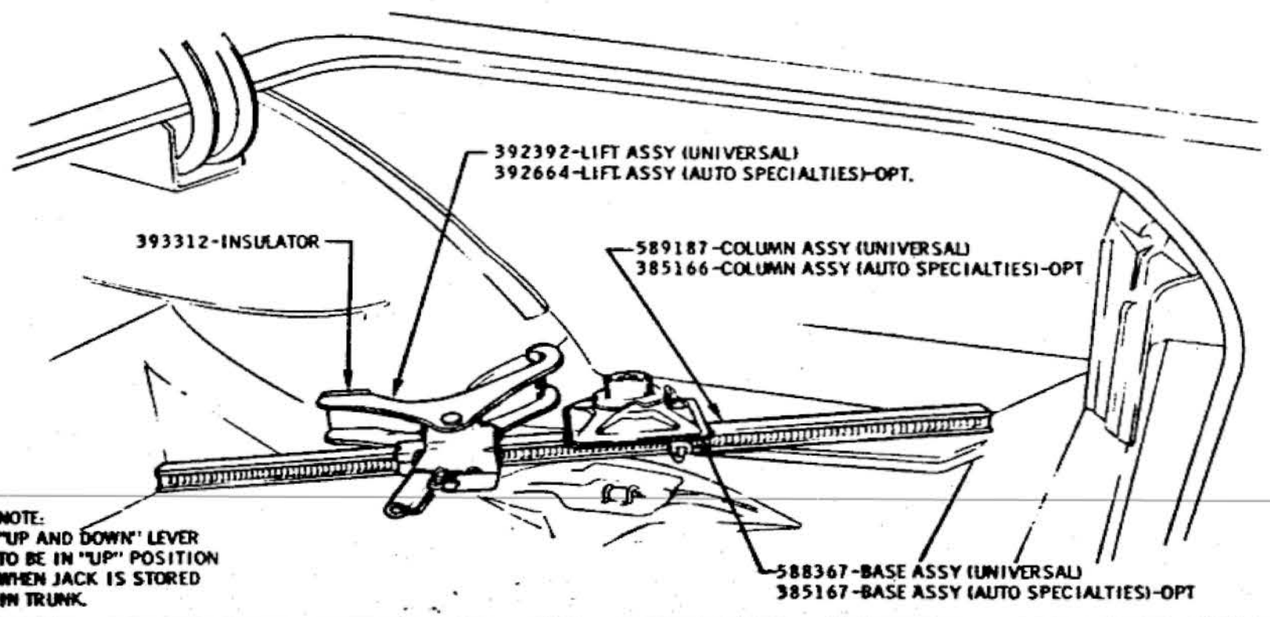

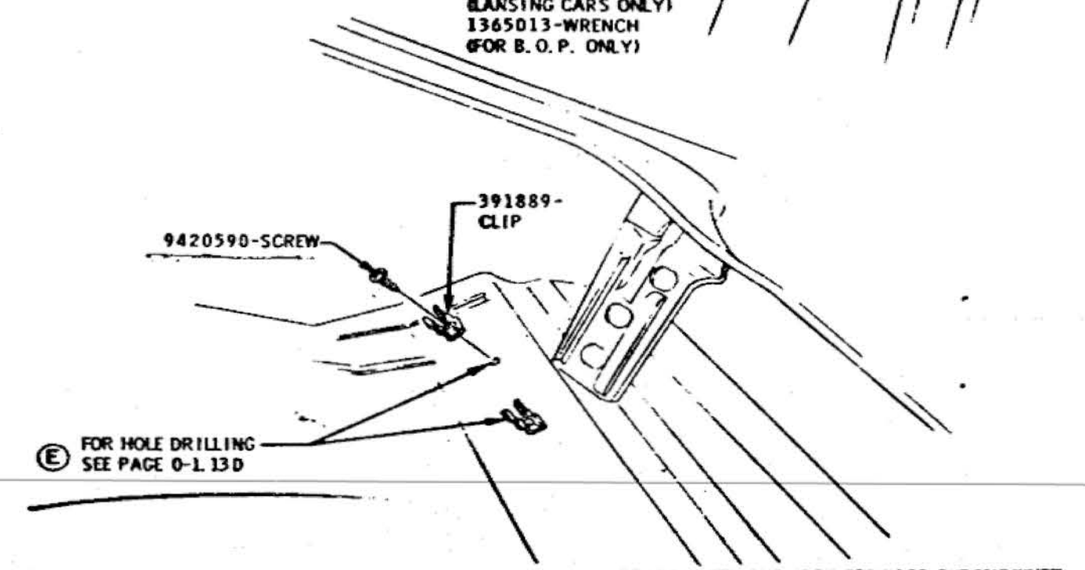

SPARE WHEEL AND JACK STOWAGE-CHROME WHEEL

DATE	SYM	REVISION	DR.	CK.	DATE	SYM	REVISION	DR.	CK.	DATE	SYM	REVISION	DR.	CK.
										8-27-65	E	NOTE REVISED		DT
										8-24-65	D	WAS 110937 F. WASHER	JJ	VP
					2-17-66	H	389031-BOLT ADDED			8-3-65	C	WHEEL BACKGND REVISED		FJ
					1-25-66	G	DRILLING NOTE ADDED			5-17-65	B	INSULATOR NO. ADDED		VP
					10-21-65	F	NOTE REMOVED		DT	4-22-65	A	LOCK REMOVED		VP

INSTALLATION **WHEELS AND TIRES**

DATE FEB. 25, 1965

DR. BY B. PARKER

CHECKED H VAN PELT

APPR.

APPR.

FIRST USED 1966

Oldsmobile Graphic ILLUSTRATION

SERIES A

REF. 35F05 10E

PAGE 10-2.1

PART NO. 589998

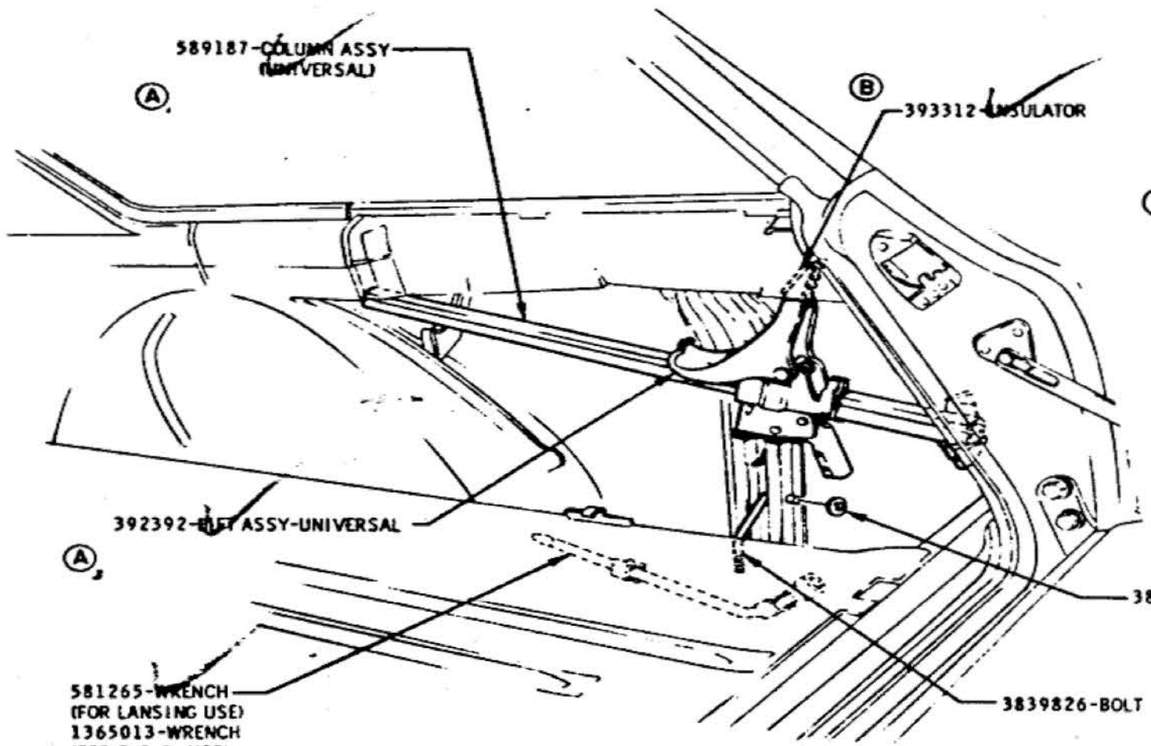

JACK ASSY & WRENCH STOWAGE

NOTE: "UP & DOWN" LEVER ON JACK ASSY TO BE IN "UP" POSITION WHEN JACK IS STORED

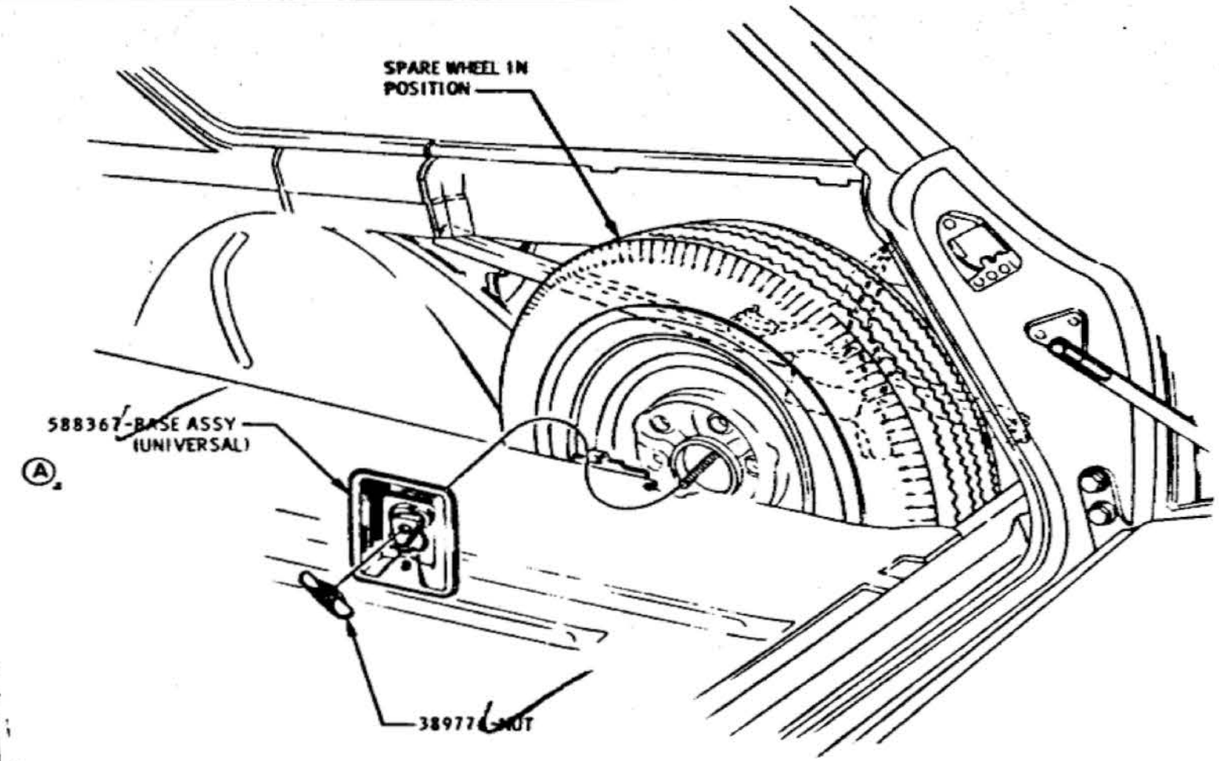

WHEEL CLAMPING & JACK BASE STOWAGE

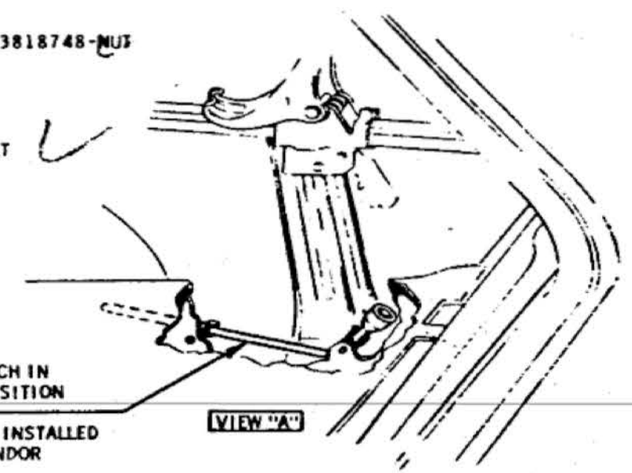

SPARE WHEEL & JACK STOWAGE
(2 & 3 SEAT S.W.)

DATE	SYM	REVISION	DR.	CK.	DATE	SYM	REVISION	DR.	CK.	DATE	SYM	REVISION	DR.	CK.
										5-7-65	B	INSULATOR NO. ADDED	JJ	VP
										4-21-65	A	"AUTO SPECIALTIES" REMOVED	JG	VP

INSTALLATION **WHEELS AND TIRES**

DATE FEB. 25, 1965
DR. BY B. PARKER
CHECKED H. VAN PELT
APPR.
APPR.

FIRST USED 1966 — Oldsmobile GRAPHIC ILLUSTRATION

SERIES A — REF. 10G 10E

PAGE 30-2.2

PART NO. 589998

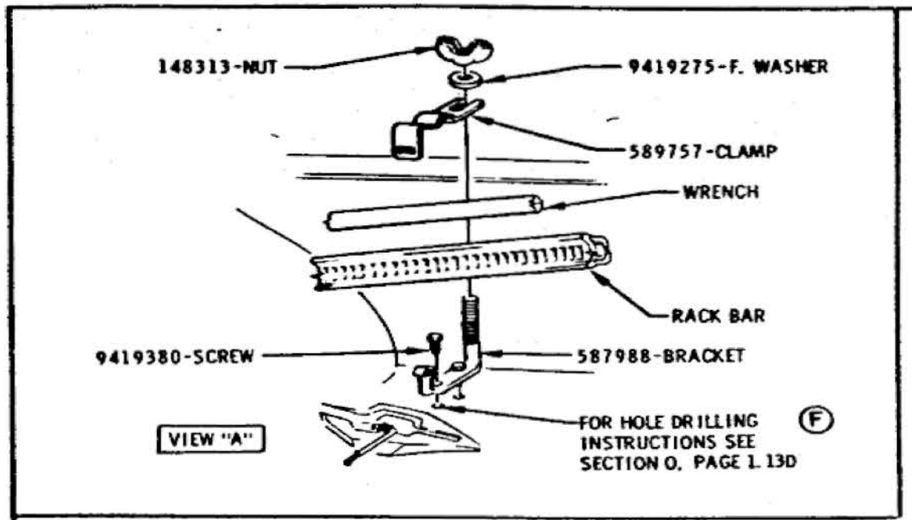

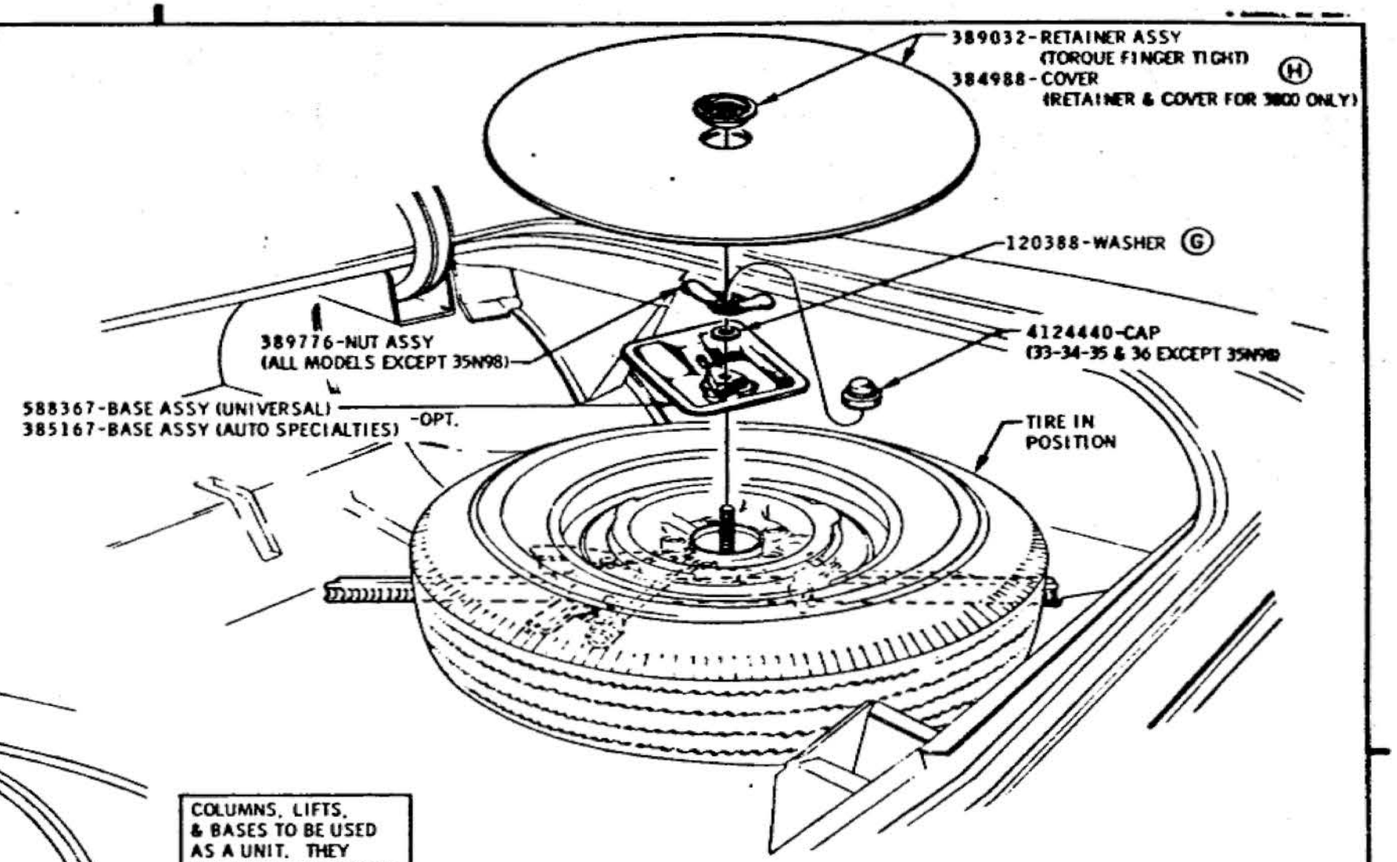

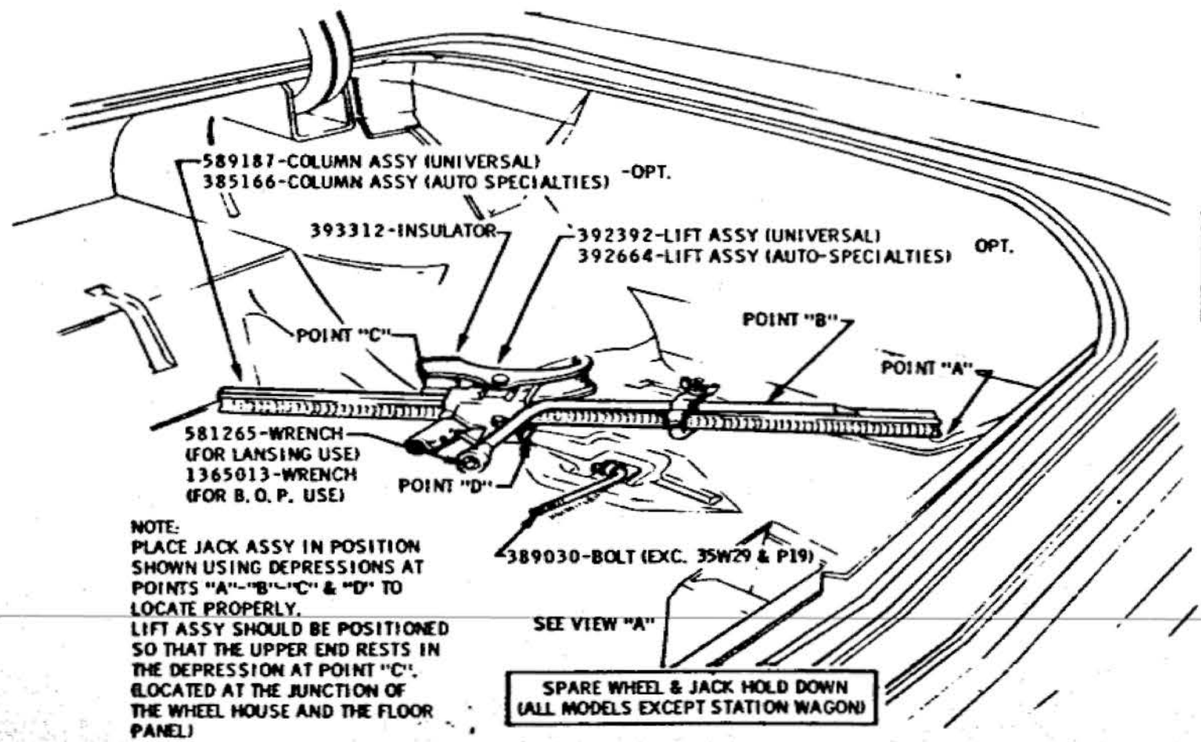

NOTE:
PLACE JACK ASSY IN POSITION SHOWN USING DEPRESSIONS AT POINTS "A"-"B"-"C" & "D" TO LOCATE PROPERLY.
LIFT ASSY SHOULD BE POSITIONED SO THAT THE UPPER END RESTS IN THE DEPRESSION AT POINT "C". (LOCATED AT THE JUNCTION OF THE WHEEL HOUSE AND THE FLOOR PANEL)

SPARE WHEEL & JACK HOLD DOWN (ALL MODELS EXCEPT STATION WAGON)

COLUMNS, LIFTS, & BASES TO BE USED AS A UNIT. THEY ARE NOT INTERCHANGEABLE.

NOTE:
"UP & DOWN" LEVER TO BE IN "UP" POSITION WHEN JACK IS STORED IN TRUNK.

SPARE WHEEL & JACK STOWAGE (EXC. S.W.)

DATE	SYM	REVISION	DR.	CK.	DATE	SYM	REVISION	DR.	CK.	DATE	SYM	REVISION	DR.	CK.
										10-8-65	E	NOTE REMOVED		DT
										8-20-65	D	WAS 110957 F. WASHER	JBS	VP
					2-22-66	H	USAGE REVISED	BP	DT	6-8-65	C	3800 CANCELLED	GC	VP
					1-10-66	G	120388 WASHER ADDED	BP	DT	5-17-65	B	INSULATOR NO. ADDED	JGB	VP
					12-5-66	F	DRILLING NOTE ADDED	BP	DT	4-22-65	A	392392 LIFT ASM WAS 392962	JGB	VP

INSTALLATION **WHEELS AND TIRES**

DATE FEB. 26, 1965
DR. BY B. PARKER
CHECKED H. VAN PELT
APPR.
APPR.

FIRST USED 1966
Oldsmobile GRAPHIC ILLUSTRATION
SERIES A
REF. 10E 14E
PAGE 10-2.3
PART NO. 589998

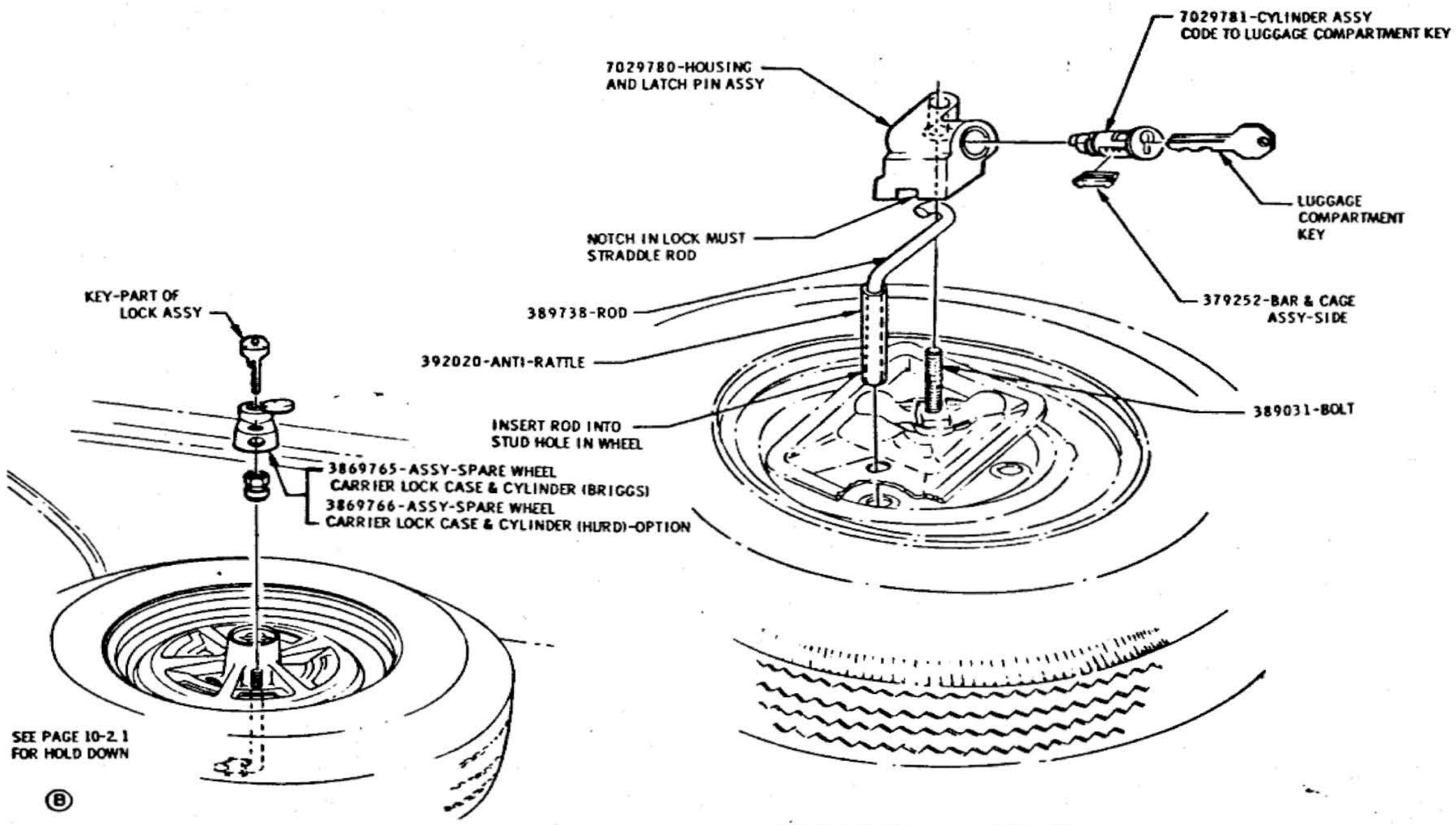

INSTALLATION SPARE WHEEL LOCK
(CHROME WHEEL ONLY)

INSTALLATION SPARE WHEEL LOCK
(EXCEPT STATION WAGON)

DATE	SYM	REVISION	DR.	CK.	DATE	SYM	REVISION	DR.	CK.	DATE	SYM	REVISION	DR.	CK.
										9-3-65	B	VIEW ADDED	CB	DT
										8-25-65	A	PAGE REISSUED	FJ	FJ

INSTALLATION WHEELS AND TIRES

DATE FEB. 17, 1965
DR. BY B PARKER
CHECKED H. VAN PELT
APPR. H. Van Pelt
APPR.

FIRST USED 1966
Oldsmobile Graphic ILLUSTRATION
SERIES A
REV. 35P19
PAGE 10-2.4
PART NO. 589998

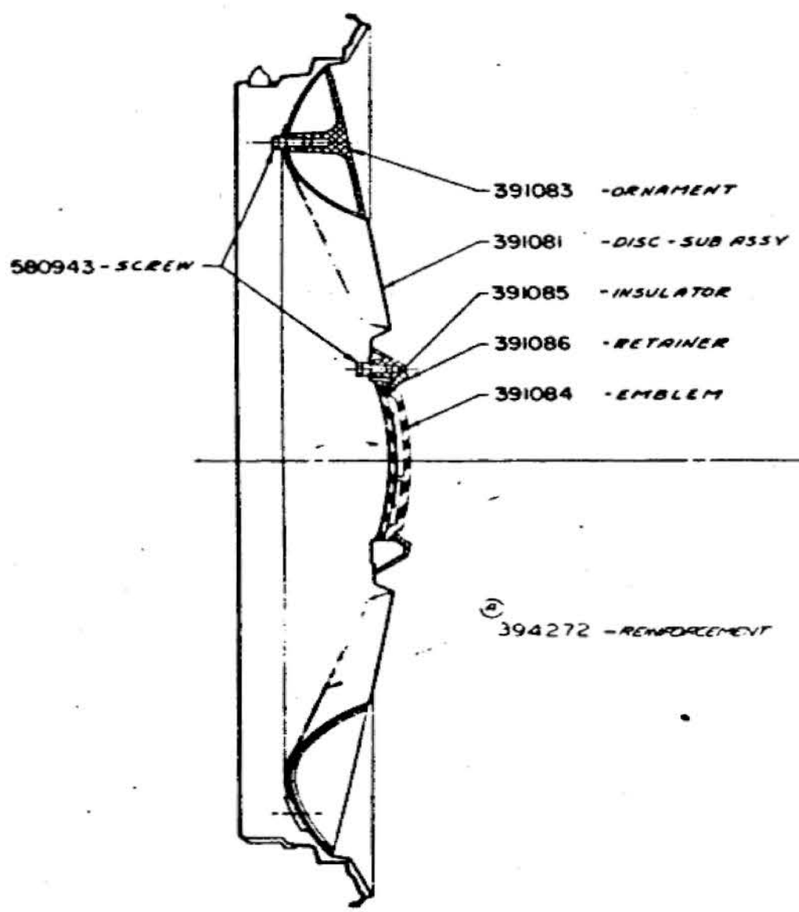

SECTION A-A

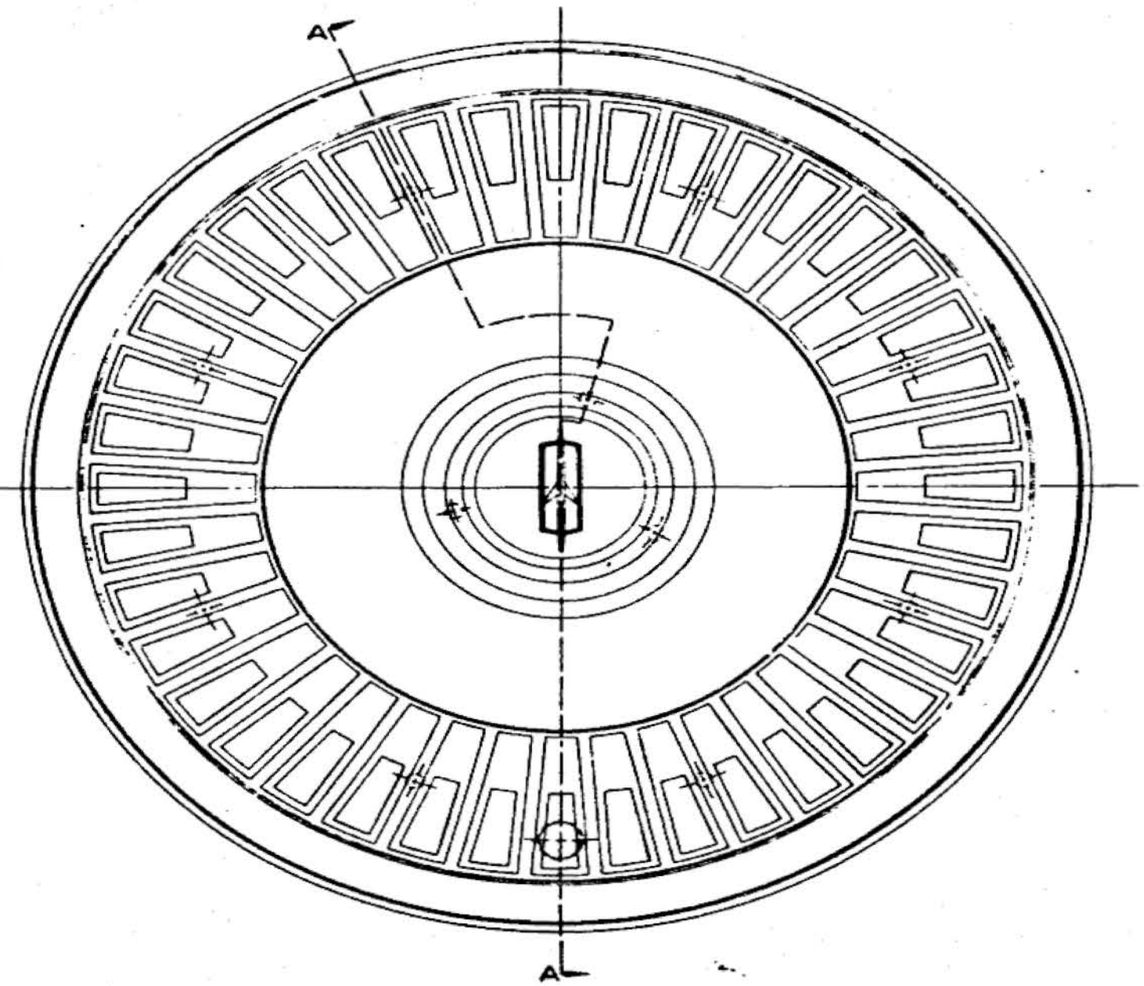

FIRST TYPE

DO NOT SCALE

OCT 22, 1964 — G. ARNTSON

FULL — BEDFORD

1966

DISC ASSEMBLY - WHEEL

C — 391080

OLDSMOBILE DIVISION
GENERAL MOTORS CORPORATION
LANSING, MICHIGAN

F-85 & B-C

10-2.5
F & B C

12-62		PRAT AD-81371			
9-10-65	A	MANUAL PAGE NO			
	B	REVISED	F16		

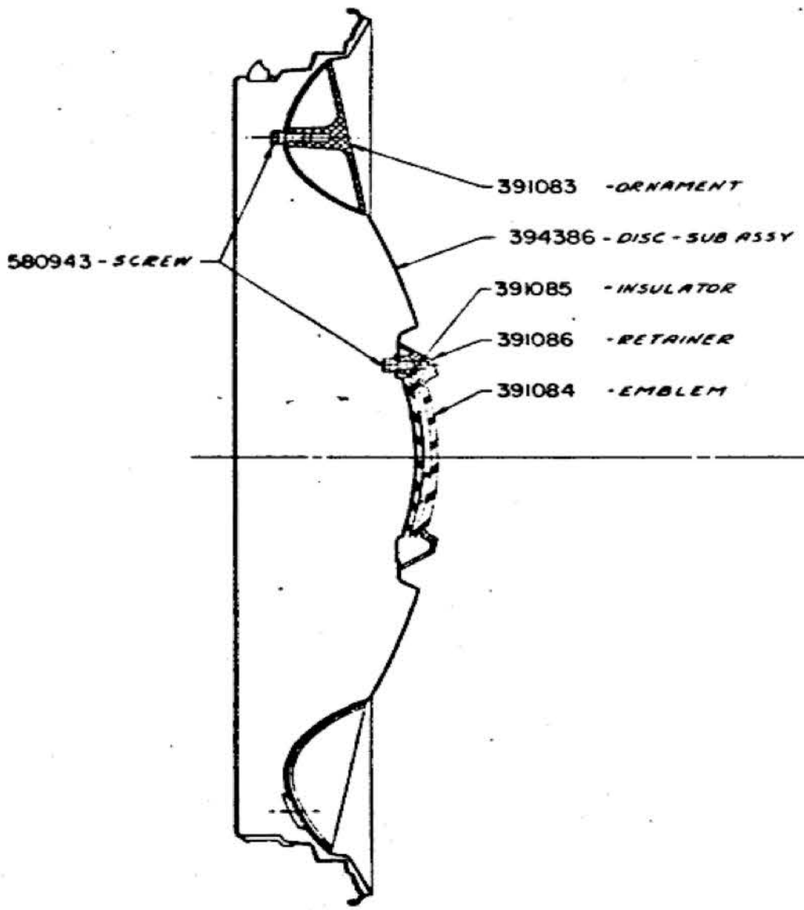

SECTION A-A

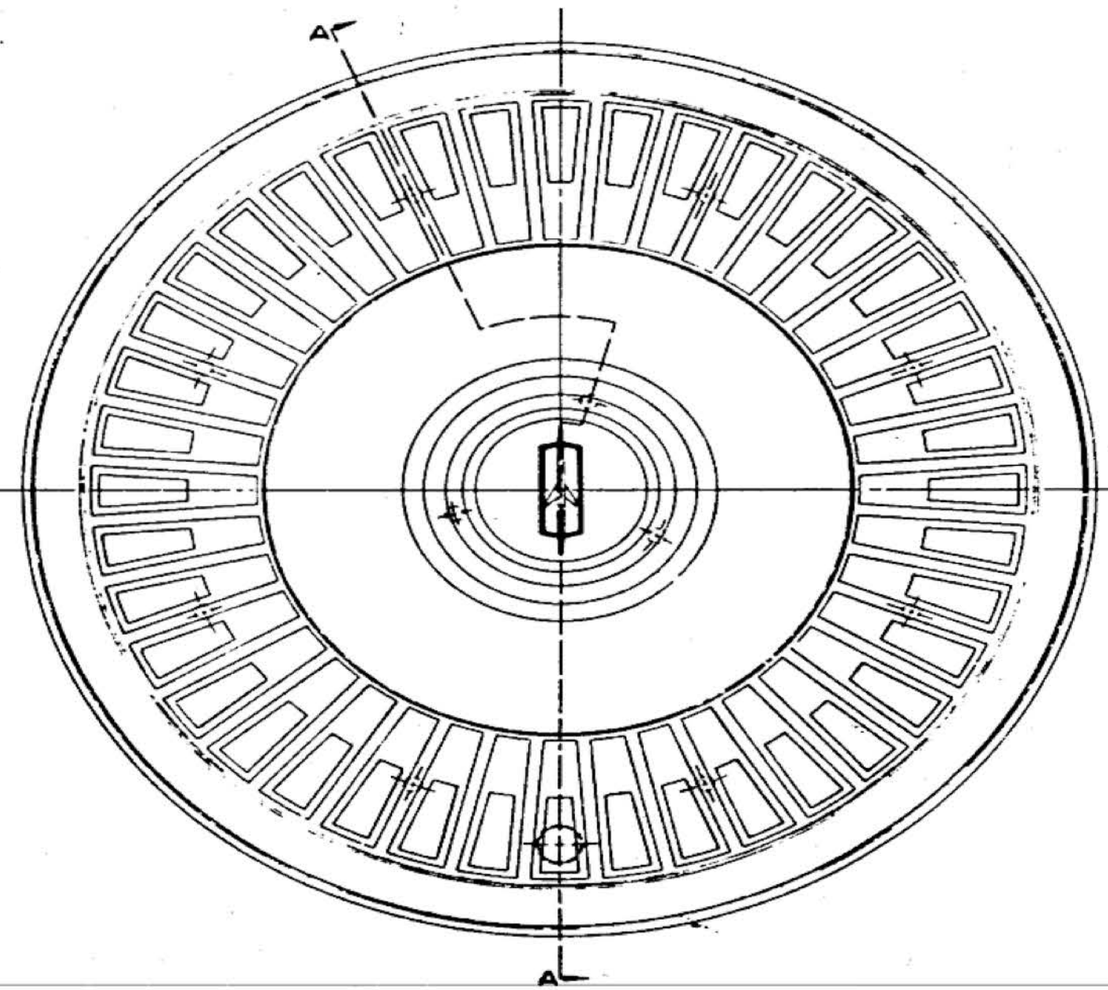

394385
SHEET 1 OF 1
LAST CHANGE A

SECOND TYPE

DO NOT SCALE

AUG. 24, 1965	W. HENDERSON
FULL	
1966	
12-79606	

DISC ASSEMBLY - WHEEL

F16 C 394385

OLDSMOBILE DIVISION
GENERAL MOTORS CORPORATION
LANSING, MICHIGAN

F-85 & B-C
AS PER DRAWING NO

394385
SHEET 1 OF 1
LAST CHANGE A

10-2.5A
A & BC

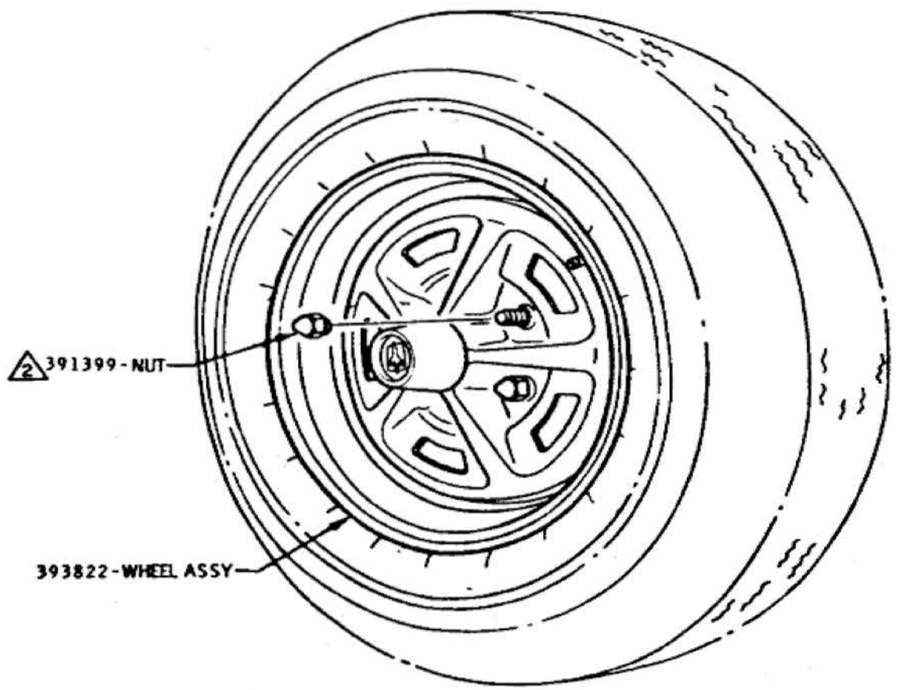

WHEEL WITH ORNAMENT IN ASSEMBLED POSITION

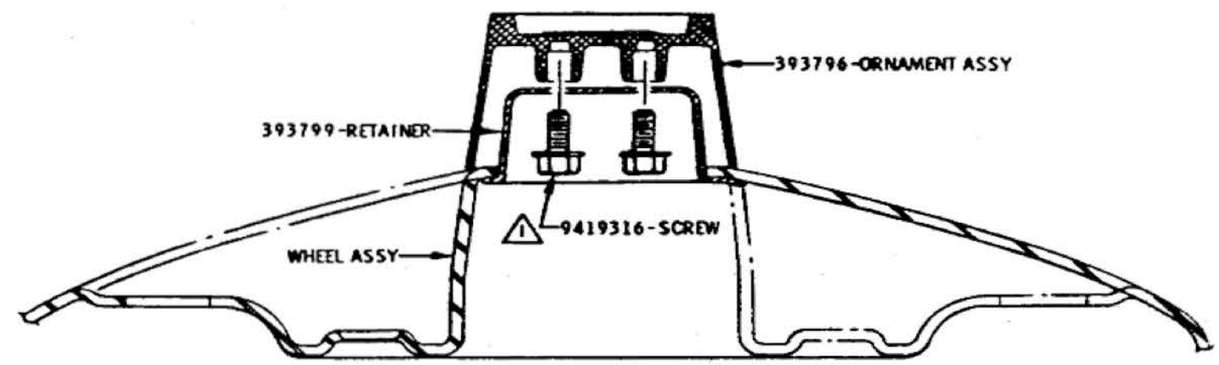

CENTERLINE SECTION THRU WHEEL AND ORNAMENT

1 60-90 LB. IN.
2 55-75 LB. FT.

(WHEEL ASSY & ORNAMENT ASSY)

DATE	SYM	REVISION	DR.	CK.	DATE	SYM	REVISION	DR.	CK.	DATE	SYM	REVISION	DR.	CK.
										7-22-65	A	REDRAWN & REVISED		

INSTALLATION **WHEELS AND TIRES**

DATE MAY 10, 1965
DR. BY. C. GORDON
CHECKED M. Barnhart
APPR.
APPR. R.W.E.G.

FIRST USED 1966

Oldsmobile Graphic Illustration

SERIES A

REF. 35 POS

PAGE 10-2.6

PART NO. 589998

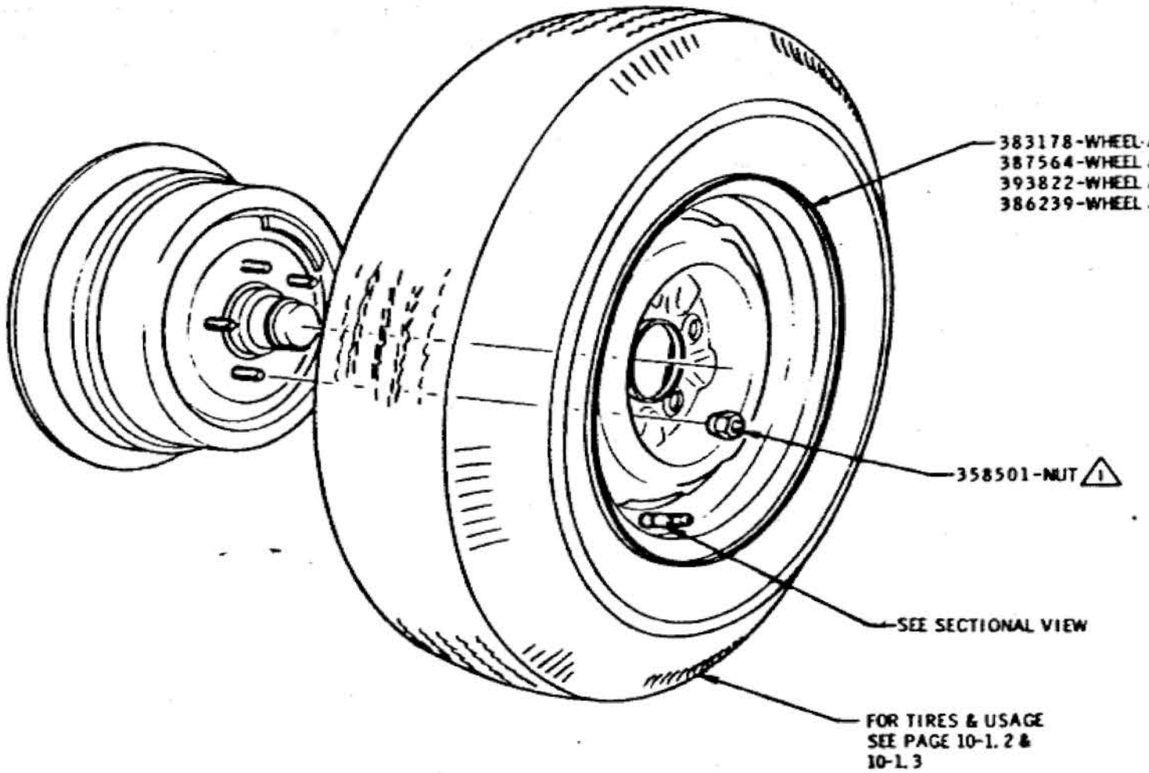

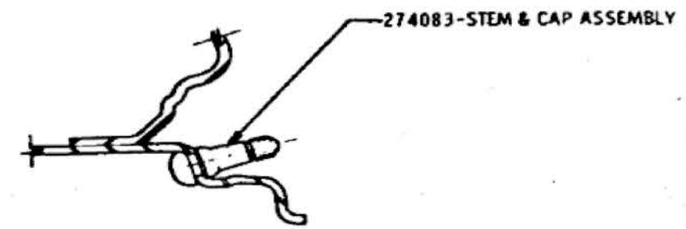

SECTION THROUGH WHEEL AT VALVE STEM

△1 55-75 LB. FT.

RIM SIZE	TIRE SIZE	TIRE OUT OF BALANCE WITHOUT BALANCE DOUGH	HUB & DRUM OUT OF BALANCE	WHEEL OUT OF BALANCE	WHEEL & TIRE ASSY MAX. STATIC OUT OF BALANCE	TIRE PRESSURE		RUNOUT OF WHEEL & TIRE ASSY	
						INITIAL INFLATION AT ASSY PLANTS	RECOMMENDED FOR SERVICE	RADIAL	LATERAL
14 X 5J	6.95 X 14	23 IN. OZ. MAX.	2 IN. OZ.	10 IN. OZ.	4 IN. OZ.	24 TO 50 LBS.	24 LBS.	.063 TIR	.081 TIR
14 X 5J	7.35 X 14	23 IN. OZ. MAX.	2 IN. OZ.	10 IN. OZ.	4 IN. OZ.	24 TO 50 LBS.	24 LBS. *	.063 TIR	.081 TIR
14 X 6JK	7.75 X 14	23 IN. OZ. MAX.	2 IN. OZ.	10 IN. OZ.	4 IN. OZ.	24 TO 50 LBS.	24 LBS. *	.063 TIR	.081 TIR

* 28 LBS. ON ALL STATION WAGONS

STATIC BALANCE WEIGHTS TO BE INSTALLED ON INBOARD RIM FLANGE UP TO AND INCLUDING 3 OZ. ABOVE 3 OZ. THE ADDITIONAL WEIGHT TO BE ADDED TO OUTBOARD RIM 4 1/2 OZ. MAX. WEIGHT PER ASSEMBLY.

ASSEMBLY INSTRUCTIONS - TIRE TO WHEEL
(1) LUBRICATE TIRE BEADS AND VALVE STEM ASSEMBLY WITH APPROVED LUBRICANT SEE PROCESS CHART.
(2) IMMEDIATELY ASSEMBLE VALVE STEM AND TIRE TO WHEEL AND INFLATE TO RECOMMENDED PRESSURE (SEE TABLE).
INSTALLATION MUST BE MADE BEFORE LUBRICANT IS DRY.
(3) BLACK SIDEWALL TIRES TO BE MOUNTED WITH SERIAL NUMBER MOLD NUMBER AND OTHER MANUFACTURING INFORMATION TOWARD CENTERLINE OF CAR.

DATE	SYM	REVISION	DR.	CK.	DATE	SYM	REVISION	DR.	CK.	DATE	SYM	REVISION	DR.	CK.

INSTALLATION — WHEELS & TIRES
DATE DECEMBER 10, 1965 — FIRST USED 1966 — Oldsmobile Division ILLUSTRATION — PAGE 10-2.7
DR. BY D.C. Wallbaum
CHECKED M. Barnhart
APPR. J.F. Howard
APPR. J. Jones
SERIES A — REF. — PART NO. 589998

OLDSMOBILE PRODUCT INFORMATION MANUAL

11-SHEET METAL

GROUP II- SHEET METAL

393274	CHART-COOLING SYSTEM FILL	11-1.2
392069	CHART-RADIATOR HOSE CODE	11-1.3
394233	CHART-FENDER IDENTIFICATION (SHEET 1)	11-1.4
394233	CHART-FENDER IDENTIFICATION (SHEET 2)	11-1.4A
394233	CHART-FENDER IDENTIFICATION (SHEET 3)	11-1.4B

RADIATOR SUPT. ASSY., HOOD LATCH & BUMPERS, SUPPORT EXTENSIONS---------- 11-2.1
SUPPORT ASSY. -GRILLE AND STONE SHIELD---------- 11-2.2
EMBLEM AND SCREEN TO SUPPORT ASSY. (442)---------- 11-2.3
HEADLAMPS AND DOORS TO SUPPORT ASSY.---------- 11-2.4
RADIATOR TO UPPER AND LOWER SUPPORTS-L-6---------- 11-2.5
RADIATOR MOUNTING STD. V8 AND 442 SERIES---------- 11-2.6
ROCKER PANEL MLDG. AND MLDG. TO FRONT FENDER WHEEL OPENING---------- 11-2.7
MOULDINGS TO FRONT FENDER---------- 11-2.8
SEALS AND SUPPORT MOUNTING---------- 11-2.9
V8 RADIATOR SUPPORT SEALS---------- 11-2.10
BATTERY SUPPORTS---------- 11-2.11
FENDER INSTALLATION, HOOD HINGE AND HOOD BUMPERS---------- 11-2.12

FENDER EXTENSION TO FENDER ASSY---------- 11-2.13
SHROUD TO UPPER AND LOWER SUPPORTS-STD. V8 AND 442 ---------- 11-2.14
SHROUD AND BRACKETS TO RADIATOR SUPT. -L6 (35C60 ONLY)---------- 11-2.15
CONDENSER AND SUPPORTS - L6 (35C60 ONLY)---------- 11-2.16
CONDENSER AND SUPPORTS - V8---------- 11-2.17
11-2.18
SCRIPT, ORNAMENT AND EMBLEM----------11-2.19
RADIATOR CAP, HOSE AND CLAMPS----------11-2.20
JUNCTION BLOCK, 35K30 REGULATOR & BRACKET, HORNS & WASHER BOTTLE---------- 11-2.21

DOOR EDGE GUARDS----------11-3.1
11-4.1
HOOD ASSY COMPLETE----------11-5.1

SHEET METAL CLEARANCES----------11-6.1

F-85 MODELS

(1) THE FOLLOWING TABLE SHOWS THE AMOUNT OF INHIBITED ETHLENE GLYCOL COOLANT REQUIRED TO GIVE A 44% SOLUTION BY VOLUME.

(F) MODEL	FREEZING POINT	PERCENT SOLUTION BY VOLUME	QUANTITY OF COOLANT SOLUTION WITHOUT HEATER	WITH HEATER
ALL V8 EXC. A/C	-20°F.	44.0	6.37 QTS.	6.70 QTS.
ALL V8 A/C OR Y76	-20°F.	44.0	6.60 QTS.	6.90 QTS.
ALL L6 EXC. A/C	-20°F.	44.0	4.83 QTS.	5.15 QTS.
ALL L6 A/C OR Y76	-20°F.	44.0	4.83 QTS.	5.15 QTS.
ALL 400 CU. IN. EXC. A/C	-20°F.	44.0	6.82 QTS.	7.13 QTS.
ALL 400 CU. IN. A/C OR Y76	-20°F.	44.0	7.04 QTS.	7.35 QTS.

TOTAL COOLING SYSTEM CAPACITY

MODELS	WITHOUT HEATER	WITH HEATER
ALL V8 EXC. A/C	14.5 QTS.	15.2 QTS.
ALL V8 A/C OR Y76	15.0 QTS.	15.7 QTS.
ALL L6 EXC. A/C	11.0 QTS.	11.7 QTS.
ALL L6 A/C OR Y76	11.0 QTS.	11.7 QTS.
ALL 400 CU. IN. EXC. A/C	15.5 QTS.	16.2 QTS.
ALL 400 CU. IN. A/C OR Y76	16.0 QTS.	16.7 QTS.

NOTE: METHANOL TYPE ANTI-FREEZE OR WATER ARE NOT TO BE USED UNDER ANY CONDITION. ALL F-85 SERIES MUST BE PROTECTED AS SHOWN ABOVE WITH ETHYLENE GLYCOL TYPE COOLANT. NO DEVIATION PERMITTED BY ANY PLANT OR ZONE FOR CLIMATIC CONDITIONS.

(2) GENERAL
CAUTION: SOLUTION LEVEL MUST BE HELD TO "FILL COLD" MARK TO PREVENT LEAKAGE DURING TRANSPORTATION AND LOSS OF COOLANT DURING OPERATION. THIS LEVEL IS MEASURED WITH COOLANT AT ROOM TEMPERATURE TO ALLOW EXPANSION VOLUME OF COOLANT UNDER OPERATION CONDITIONS. EXTREME CARE MUST BE TAKEN IN FILLING COOLING SYSTEM TO PREVENT DAMAGE TO CAR FINISH.

NOTE: COOLING SYSTEM OPERATION CAPACITY (COOLANT AT ROOM TEMPERATURE) FILLED TO "FILL COLD" MARK.

B, C & E MODELS

(1) THE FOLLOWING TABLE SHOWS THE AMOUNT OF INHIBITED ETHYLENE GLYCOL COOLANT REQUIRED TO GIVE A 44% SOLUTION BY VOLUME.

(F) MODELS	FREEZING POINT	PERCENT SOLUTION BY VOLUME	QUANTITY OF COOLANT SOLUTION WITHOUT HEATER	WITH HEATER
ALL 5200 EXC. A/C & Y72	-20°F.	44.0	6.83 QTS.	7.25 QTS.
(E) ALL 5200 A/C	-20°F.	44.0		7.50 QTS.
ALL 5200 Y72	-20°F.	44.0	7.25 QTS.	7.70 QTS.
ALL EXC. AIR COND. & Y72	-20°F.	44.0	7.25 QTS.	7.70 QTS.
(E) ALL AIR COND.	-20°F.	44.0		7.82 QTS.
ALL Y72	-20°F.	44.0	7.70 QTS.	8.15 QTS.

TOTAL COOLING SYSTEM CAPACITY

MODELS	WITHOUT HEATER	WITH HEATER
ALL 5200 EXC. A/C & Y72	15.5 QTS.	16.5 QTS.
(E) ALL 5200 A/C		17.0 QTS.
ALL 5200 Y72	16.5 QTS.	17.5 QTS.
ALL EXC. AIR COND. & Y72	16.5 QTS.	17.5 QTS.
ALL AIR COND.		18.0 QTS.
(E) ALL Y72	17.5 QTS.	18.5 QTS.

(2) GENERAL
CAUTION: SOLUTION LEVEL MUST BE HELD TO "FILL COLD" MARK TO PREVENT LEAKAGE DURING TRANSPORTATION AND LOSS OF COOLANT DURING OPERATION. THIS LEVEL IS MEASURED WITH COOLANT AT ROOM TEMPERATURE TO ALLOW EXPANSION VOLUME OF COOLANT UNDER OPERATION CONDITIONS. EXTREME CARE MUST BE TAKEN IN FILLING COOLING SYSTEM TO PREVENT DAMAGE TO CAR FINISH.

NOTE: COOLING SYSTEM OPERATION CAPACITY (COOLANT AT ROOM TEMPERATURE) FILLED TO "FILL COLD" MARK.

APPROVED SOURCES & MATERIALS

WYANDOTTE CHEMICAL	SINGLE PHASE U-2407-CW
UNION CARBIDE	G300
JEFFERSON CHEMICAL	JC57
DUPONT	M29
OLIN-MATHIESON	OM-91D
DOW CHEMICAL	D-566-100
WYANDOTTE	U-3034 CW
DOW CHEMICAL	725
MINERAL INDUSTRIES, INC.	#101
HOUSTON CHEMICAL CORP.	#700-BC-20

RADIATOR FILL REQUIREMENTS:

1. ETHYLENE GLYCOL TWO YEAR COOLANT MEETING SPECIFICATION 9985012 MANDATORY IN ALL SERIES YEAR AROUND TO PROVIDE AN INHIBITED COOLANT IN THE AMOUNTS TABULATED.
2. SOLUBLE OIL MEETING SPECIFICATION OF 9985017 TO BE ADDED TO ALL SERIES IN FOLLOWING QUANTITY:

   2.00 ± .25 OZ. PER CAR OR .29 GAL. PER 100 GAL. OF COOLANT.

(D) 3. ANTI FOAM ADDITIVE, SPECIFICATION 9985147 TO BE ADDED TO THE FOLLOWING MODELS. ALL 9400, 9600 AND 54, 56, 58, 84, 8600 MODELS WITH AIR CONDITIONING IN THE FOLLOWING QUANTITY. 1.00 OZ. PER CAR.

PRODUCTION SAMPLE TO BE TESTED AND APPROVED BY PRODUCT ENGINEERING FOR OLDSMOBILE PARTS.

DATE	SYM	REVISION	DR.	CK.	DATE	SYM	REVISION	DR.	CK.	DATE	SYM	REVISION	DR.	CK.
										1-14-66	E	WAS Y76	CB	JA
										9-24-65	D	9985147 ADDED	JJ	JA
										2-8-65	C	REVISED	JC	JA
					4-22-66	FG	MODEL USAGES &			6-7-65	B	E SERIES ADDED	JJ	JG
							QUANTITIES REV	RG	JA	6-2-63	A	REQUIREMENTS REVISED	GG	JA

CHART COOLING SYSTEM FILL

DATE APRIL 30, 1965 | DR. BY J.E. CASLER | CHECKED | APPR. | APPR.

FIRST USED 1966 | Oldsmobile GRAPHIC ILLUSTRATION | SERIES A-B-C-E | REF. | PAGE 11-1.2 | PART NO. 393274

	PART NUMBER	CODE
©	386828	VE
	390437	VJ
	390921	VK
	390923	VL
	388677	VM
	391946	VN
	391947	VP
	388679	VR
Ⓑ	393664	VS
Ⓓ	394287	VT
Ⓔ	395056	VU
Ⓕ	396249	VV

SEE DETAIL DRAWING FOR LOCATION OF CODE LETTERS

DATE	SYM	REVISION	DR.	CK.	DATE	SYM	REVISION	DR.	CK.	DATE	SYM	REVISION	DR.	CK.
										12-2-66	E	395056 ADDED	OS	AP
										9-27-65	D	394287 ADDED	8/26	JKG
										7-29-65	C	WAS 386829	OS	JP
										6-4-65	B	393664 ADDED	CG	JKG
					2-3-66	F	396249 ADDED	KL	JP	1-28-65	A	FORMAT REVISED	JJ	JP

CHART — CODE - RADIATOR HOSE

DATE JAN. 27, 1965
DR. BY J.L. GRAY
CHECKED JN AMES
APPR.
APPR.

FIRST USED 1966

Oldsmobile Graphic Illustration

SERIES A-B-C-E

REV.

PAGE 11-1.3

PART NO. 392069

OLDSMOBILE DIVISION GENERAL MOTORS CORPORATION LANSING — MICHIGAN

391340-R. H.
391341-L. H. -FENDER ASSY (AFTER PIERCING)

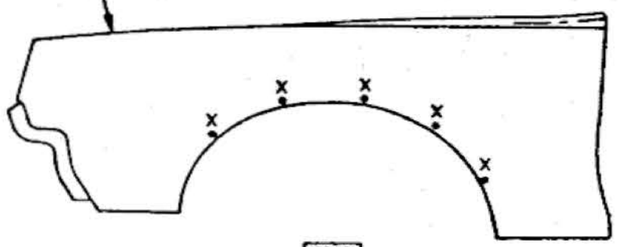

3300

392514-R. H.
391341-L. H. -FENDER ASSY (AFTER PIERCING) R. H. ONLY

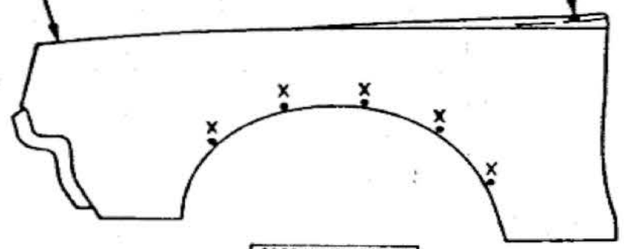

3300 WITH 35U63

392504-R. H.
392505-L. H. -FENDER ASSY (AFTER PIERCING)

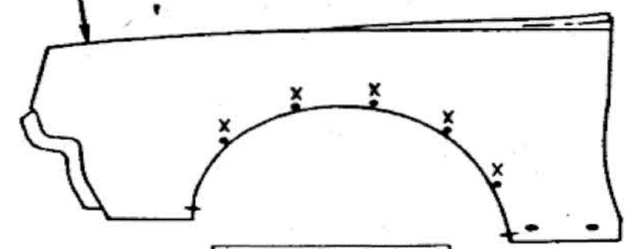

3500 OR 3300 WITH 35Y68

392517-R. H.
392505-L. H. -FENDER ASSY (AFTER PIERCING) R. H. ONLY

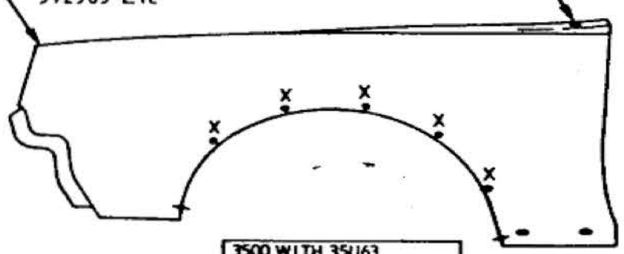

3500 WITH 35U63
OR
3300 WITH 35Y68 & 35U63

392500-R. H.
392501-L. H. -FENDER ASSY (AFTER PIERCING)

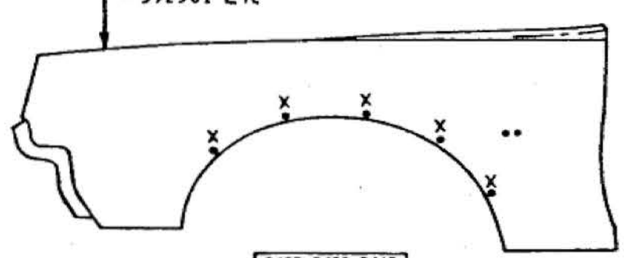

3407-3435-3469

392515-R. H.
392501-L. H. -FENDER ASSY (AFTER PIERCING) R. H. ONLY

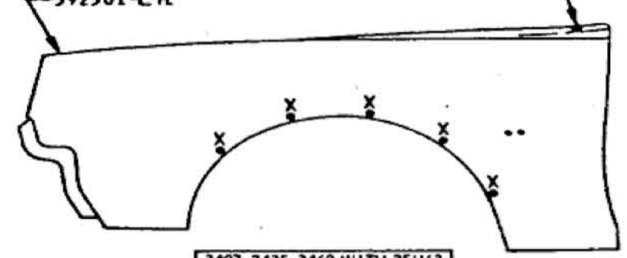

3407-3435-3469 WITH 35U63

392502-R. H.
392503-L. H. -FENDER ASSY (AFTER PIERCING)

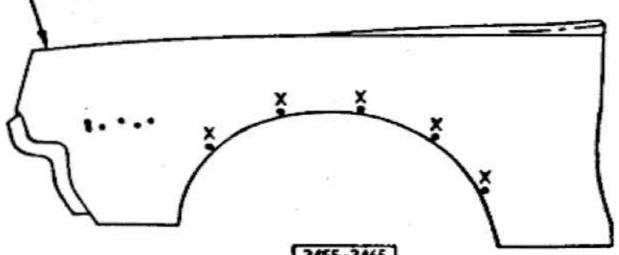

3455-3465

392512-R. H.
392513-L. H. -FENDER ASSY (AFTER PIERCING)

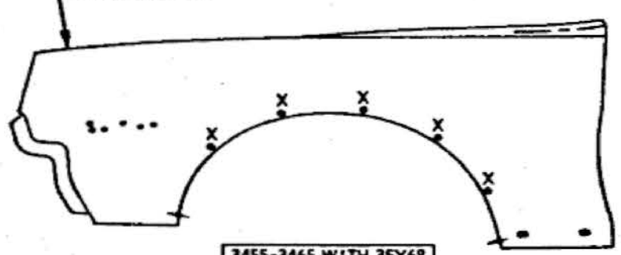

3455-3465 WITH 35Y68

392516-R. H.
392503-L. H. -FENDER ASSY (AFTER PIERCING) R. H. ONLY

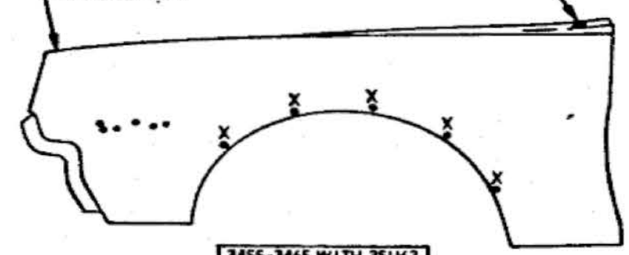

3455-3465 WITH 35U63

HOLES MARKED "X" ARE IN FENDER PANEL PRIOR TO PIERCING OPERATION

FOR HOLE SIZES AND LOCATIONS, SEE DRAWING 392531

L. H. SHOWN

SHEET 1 OF 3

DATE	SYM	REVISION	DR.	CK.	DATE	SYM	REVISION	DR.	CK.	DATE	SYM	REVISION	DR.	CK.

CHART	FENDER	IDENTIFICATION	
DATE AUGUST 20, 1965	FIRST ISSUED 1966	Oldsmobile Graphic Illustration	PAGE 11-L4
DR. BY R.R. STANLAKE			
CHECKED J.L. GRAY	SERIES A	REF.	PART NO. 394233
APPR.			
APPR.			

OLDSMOBILE DIVISION GENERAL MOTORS CORPORATION LANSING — MICHIGAN

392521-R. H.
392513-L. H. -FENDER ASSY (AFTER PIERCING)

R. H. ONLY

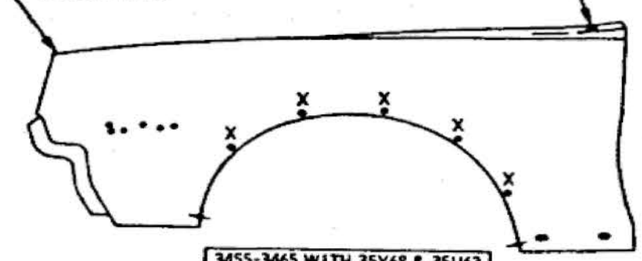

3455-3465 WITH 35Y68 & 35U63

392522-R. H.
392523-L. H. -FENDER ASSY (AFTER PIERCING)

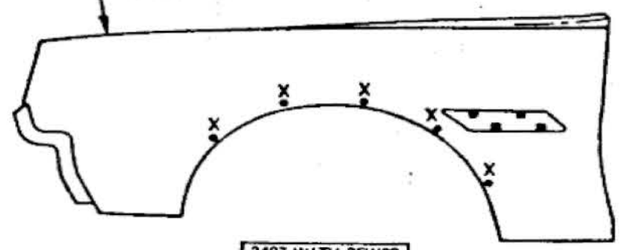

3407 WITH 35W29

392526-R. H.
392523-L. H. -FENDER ASSY (AFTER PIERCING)

R. H. ONLY

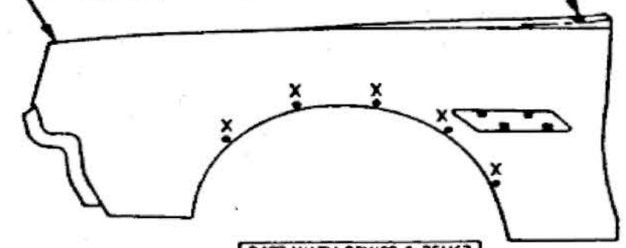

3407 WITH 35W29 & 35U63

392508-R. H.
392509-L. H. -FENDER ASSY (AFTER PIERCING)

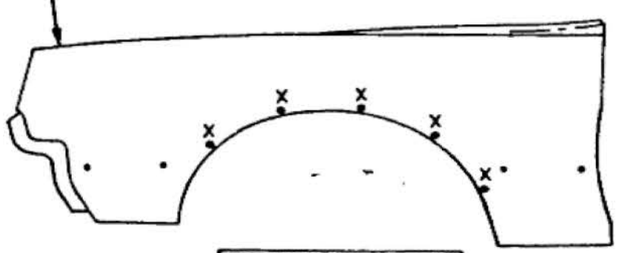

3807-3817-3839-3867-3869

392519-R. H.
392509-L. H. -FENDER ASSY (AFTER PIERCING)

R. H. ONLY

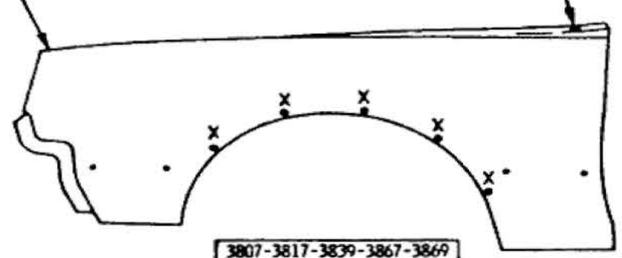

3807-3817-3839-3867-3869
WITH 35U63

392530-R. H.
392529-L. H. -FENDER ASSY (AFTER PIERCING)

R. H. ONLY

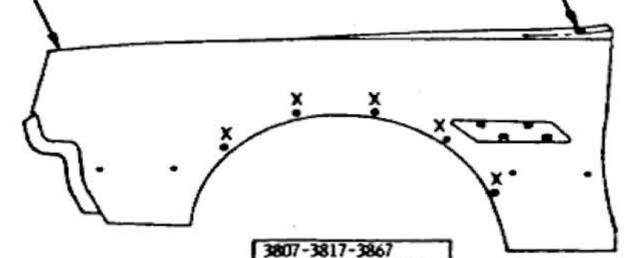

3807-3817-3867
WITH 35W29 & 35U63

392528-R. H.
392529-L. H. -FENDER ASSY (AFTER PIERCING)

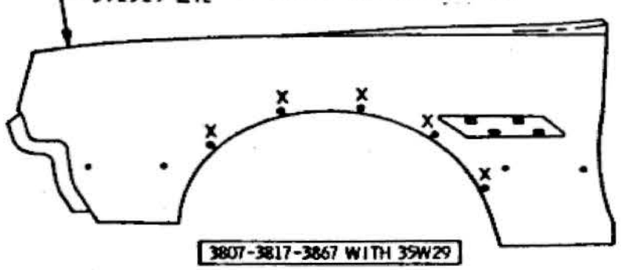

3807-3817-3867 WITH 35W29

392510-R. H.
392511-L. H. -FENDER ASSY (AFTER PIERCING)

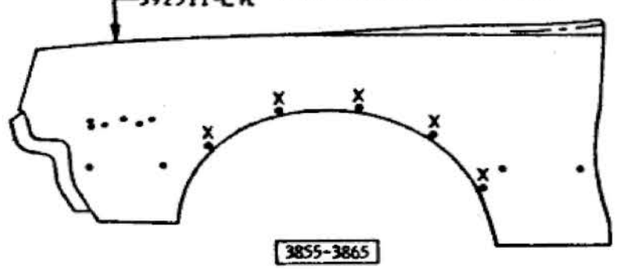

3855-3865

392520-R. H.
392511-L. H. -FENDER ASSY (AFTER PIERCING)

R. H. ONLY

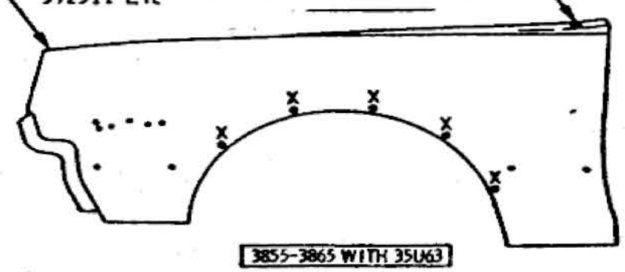

3855-3865 WITH 35U63

LOUVER OPENING IS IN FENDER PANEL PRIOR TO PIERCING OPERATION

HOLES MARKED "X" ARE IN FENDER PANEL PRIOR TO PIERCING OPERATION

FOR HOLE SIZES AND LOCATIONS, SEE DRAWING 392531

L.H. SHOWN

SHEET 2 OF 3

DATE	SYM	REVISION	DR.	CK.	DATE	SYM	REVISION	DR.	CK.	DATE	SYM	REVISION	DR.	CK.

CHART FENDER IDENTIFICATION

DATE AUGUST 20, 1965
DR. BY R.R. STANLAKE
CHECKED J.L. GRAY
APPR.
APPR.

FIRST USED 1966

Oldsmobile Classic ILLUSTRATION

PAGE 11-L.4A

SERIES A

REV.

PART NO. 394233

OLDSMOBILE DIVISION GENERAL MOTORS CORPORATION LANSING — MICHIGAN

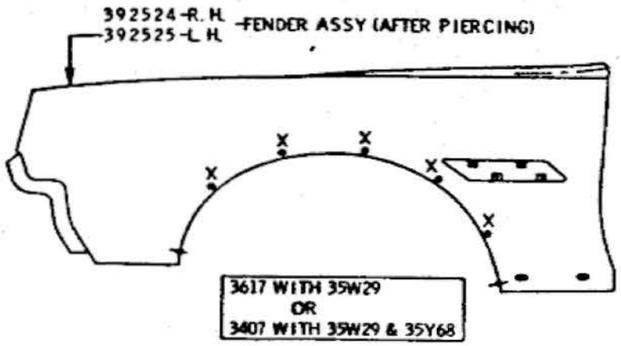

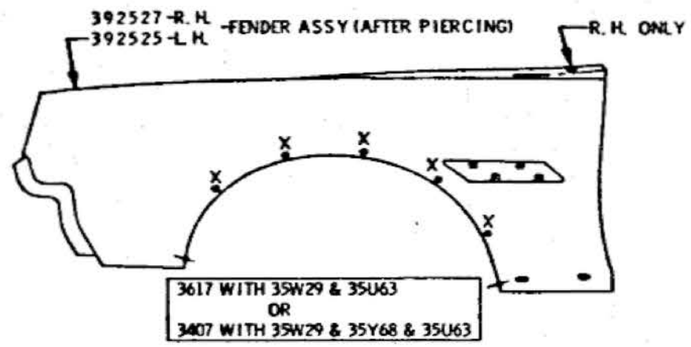

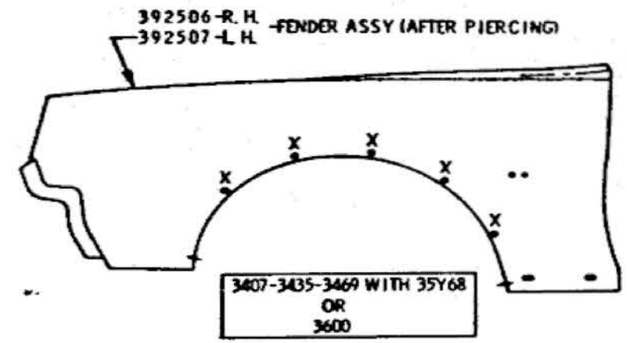

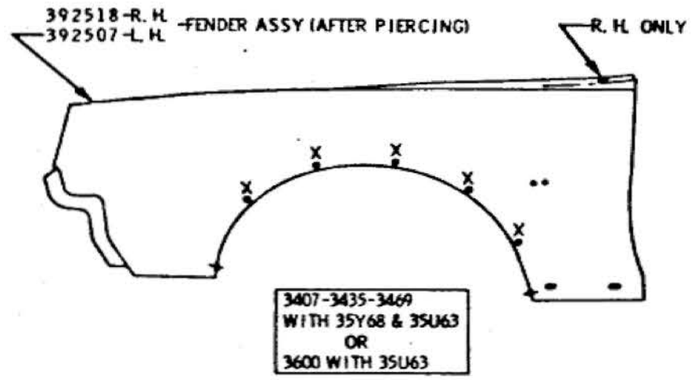

LOUVER OPENING IS IN FENDER PANEL PRIOR TO PIERCING OPERATION

HOLES MARKED "X" ARE IN FENDER PANEL PRIOR TO PIERCING OPERATION

FOR HOLE SIZES AND LOCATIONS, SEE DRAWING 392531

L. H. SHOWN

SHEET 3 OF 3

DATE	SYM	REVISION	DR.	CK.	DATE	SYM	REVISION	DR.	CK.	DATE	SYM	REVISION	DR.	CK.

CHART FENDER IDENTIFICATION

DATE AUGUST 20, 1965
DR. BY R. R. STANLAKE
CHECKED J. L. GRAY
APPR.
APPR.

FIRST USED 1966

Oldsmobile Division ILLUSTRATION

PAGE 11-1.4B

SERIES A

REV.

PART NO. 394233

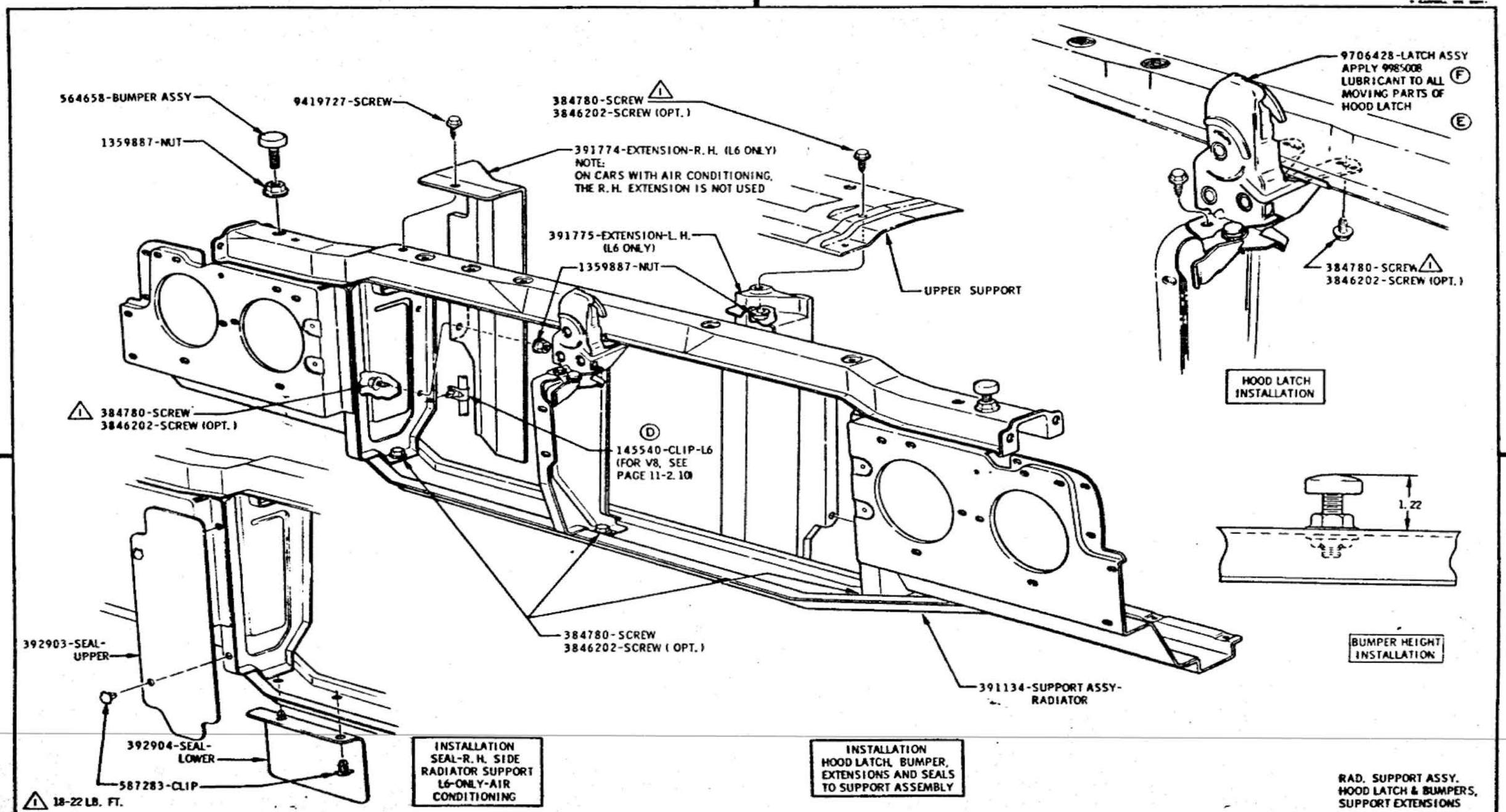

DATE	SYM	REVISION	DR.	CK.	DATE	SYM	REVISION	DR.	CK.	DATE	SYM	REVISION	DR.	CK.
										12-7-65	E	LUBRICANT NOTE ADDED		DT
										10-12-65	D	PART NO. ADDED		DT
										7-12-65	C	WAS 3847602 SCREW	CG	FJ
										5-27-65	B	9419727 SCR NO ADDED	JJ	VP
					4-21-65	F	LUB. NOTE REVISED		DT	4-22-65	A	VIEW & P.T. NOS. ADDED		VP

INSTALLATION — SHEET METAL

DATE FEB. 17, 1965
DR. BY G. KESTER
CHECKED H. VAN PELT
APPR.
APPR.

FIRST USED 1966 — Oldsmobile Service ILLUSTRATION

SERIES A — REF. 88-CLD 11A-11E 13B-13C

PAGE 11-2.1

PART NO. 589998

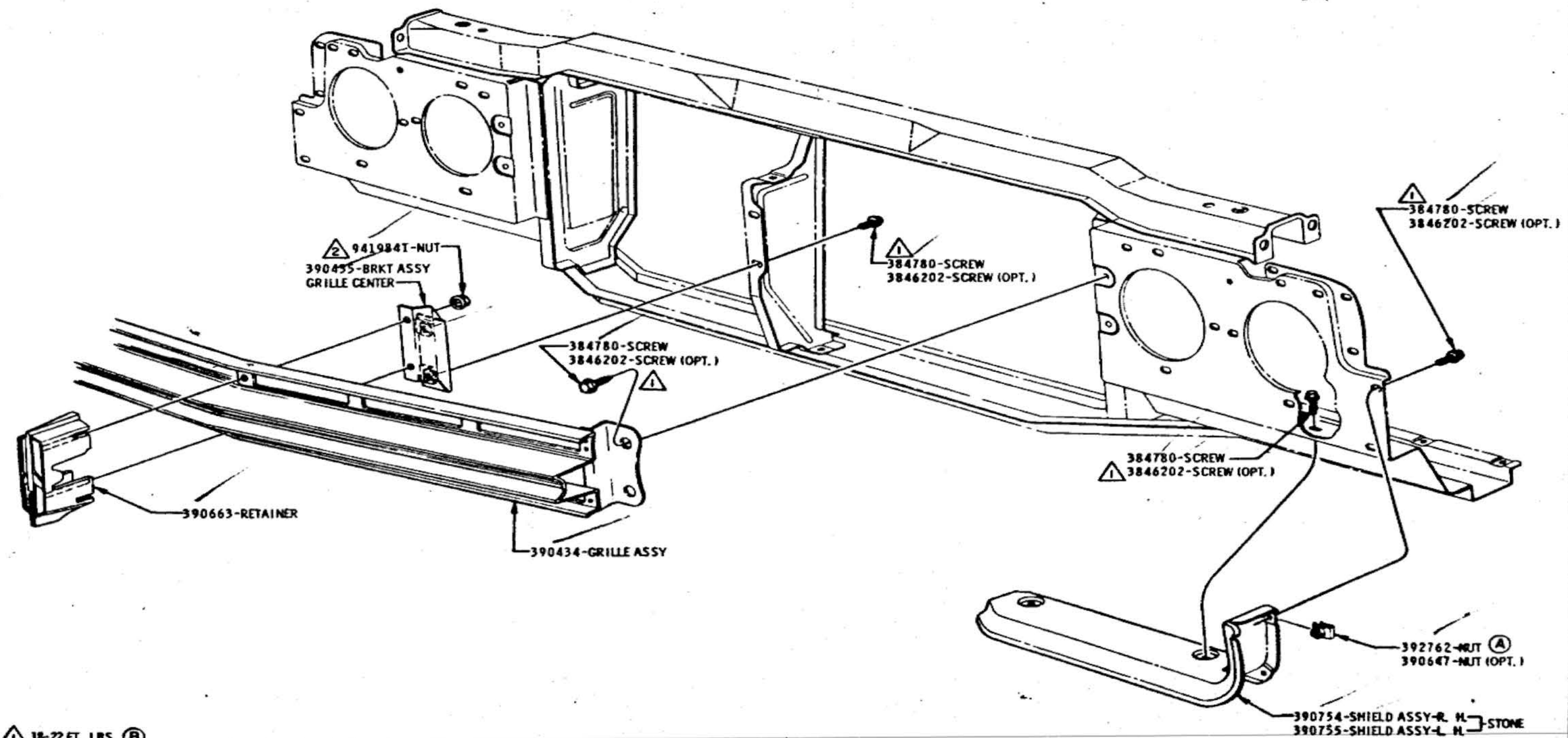

SUPPORT ASSY-GRILLE & STONE SHIELD

DATE	SYM	REVISION	DR.	CK.	DATE	SYM	REVISION	DR.	CK.	DATE	SYM	REVISION	DR.	CK.
										4/20/65	B	WAS 18-32 FT. LBS.	JJ	VP
										7/6/65	A	WAS 388832 NUT	JG	VP

INSTALLATION **SHEET METAL**

DATE FEB. 17, 1965
DR. BY G. KESTER
CHECKED H. VAN PELT
APPR.
APPR.

FIRST USED 1966 — Oldsmobile ILLUSTRATION

SERIES A — REF. 11E 13C

PAGE 11-2.2

PART NO. 589998

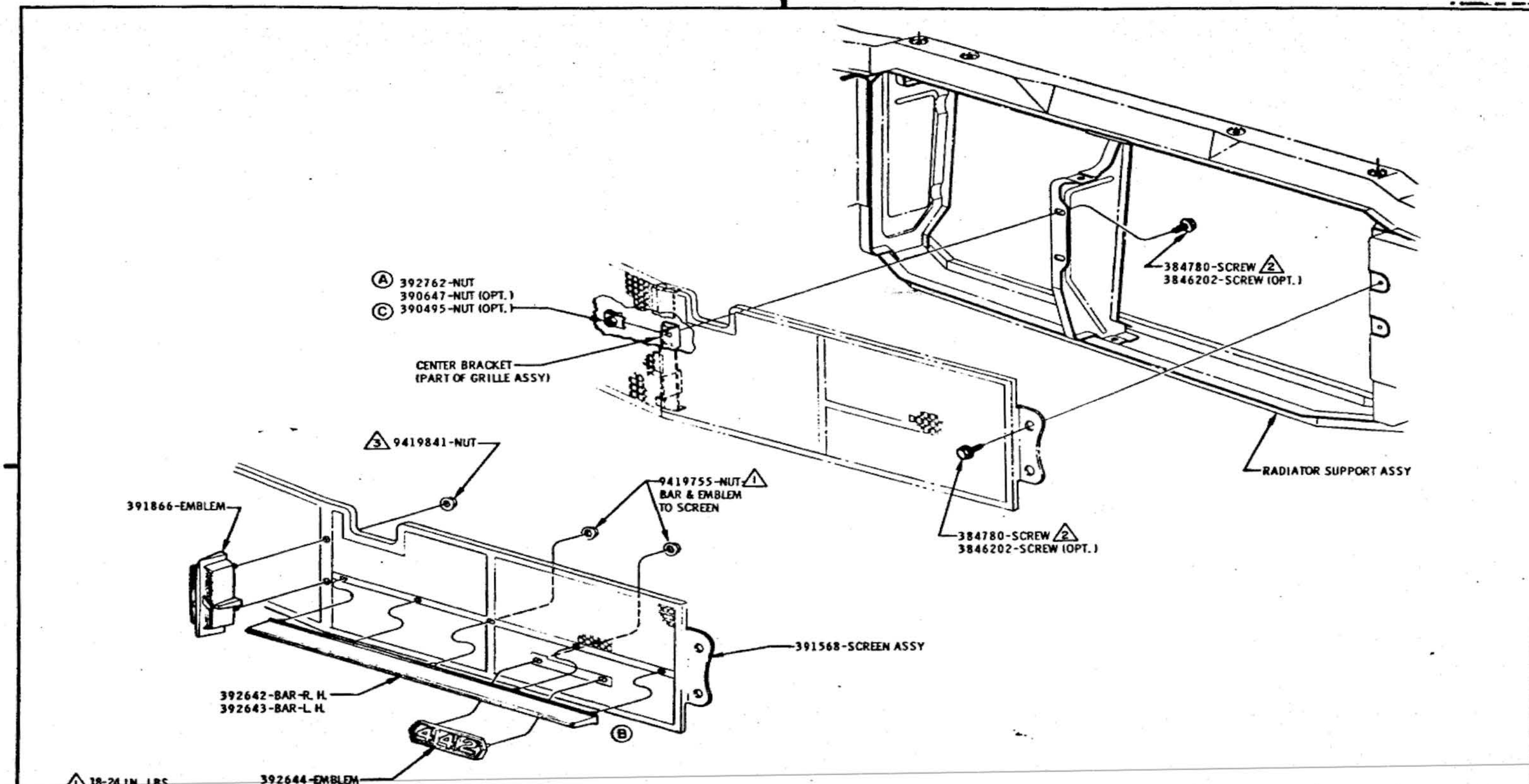

EMBLEM & SCREEN TO SUPPORT ASSY

DATE	SYM	REVISION	DR.	CK.	DATE	SYM	REVISION	DR.	CK.	DATE	SYM	REVISION	DR.	CK.
										8-12-65	C	390495 NUT (OPT.) ADDED	G.K.	V.P.
										8-12-65	B	BAR & SCREEN REV TO DETAIL	G.K.	V.P.
										4-6-65	A	WAS 388832 NUT		V.P.

INSTALLATION
DATE FEB. 17, 1965
DR. BY G. KESTER
CHECKED H. VAN PELT
APPR.
APPR.

SHEET METAL

FIRST USED 1966

Oldsmobile Classic ILLUSTRATION

SERIES A

REF. 35W29

PAGE 11-23

PART NO. 589998

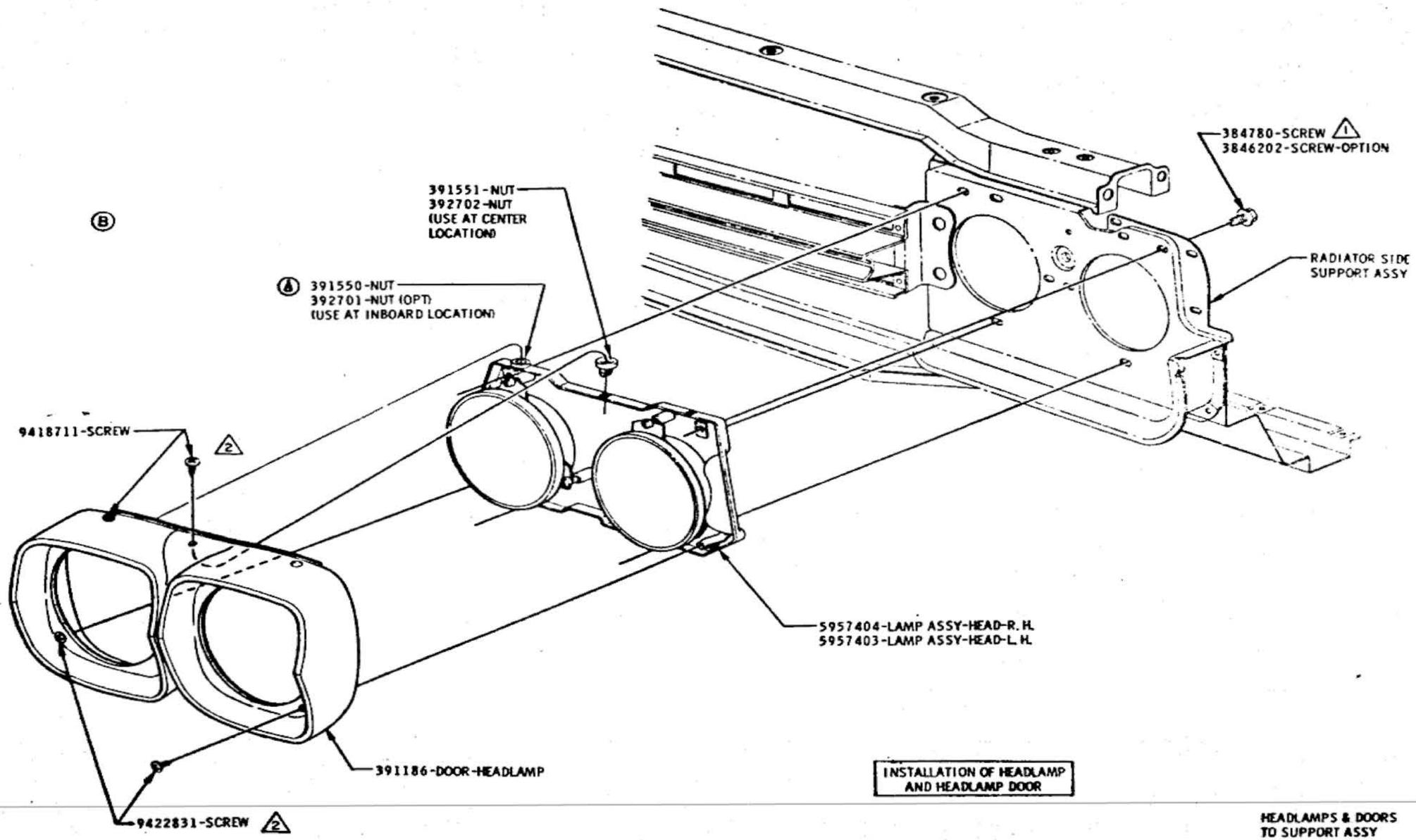

△1 18-22 LB. FT.
△2 20-24 LB. IN.

INSTALLATION OF HEADLAMP AND HEADLAMP DOOR

HEADLAMPS & DOORS TO SUPPORT ASSY

DATE	SYM	REVISION	DR.	CK.	DATE	SYM	REVISION	DR.	CK.	DATE	SYM	REVISION	DR.	CK.
										6-30-65	B	HDLAMP DOOR USAGE REV.	BP	DT
										4-8-65	A	PART NO. ADDED	GR	VP

INSTALLATION SHEET METAL
DATE FEB. 17, 1965
DR. BY G. KESTER
CHECKED H. VAN PELT
APPR.
APPR.

FIRST USED 1966 — Oldsmobile Divisions ILLUSTRATION — SERIES A — REF. 12C

PAGE 11-24

PART NO. 589998

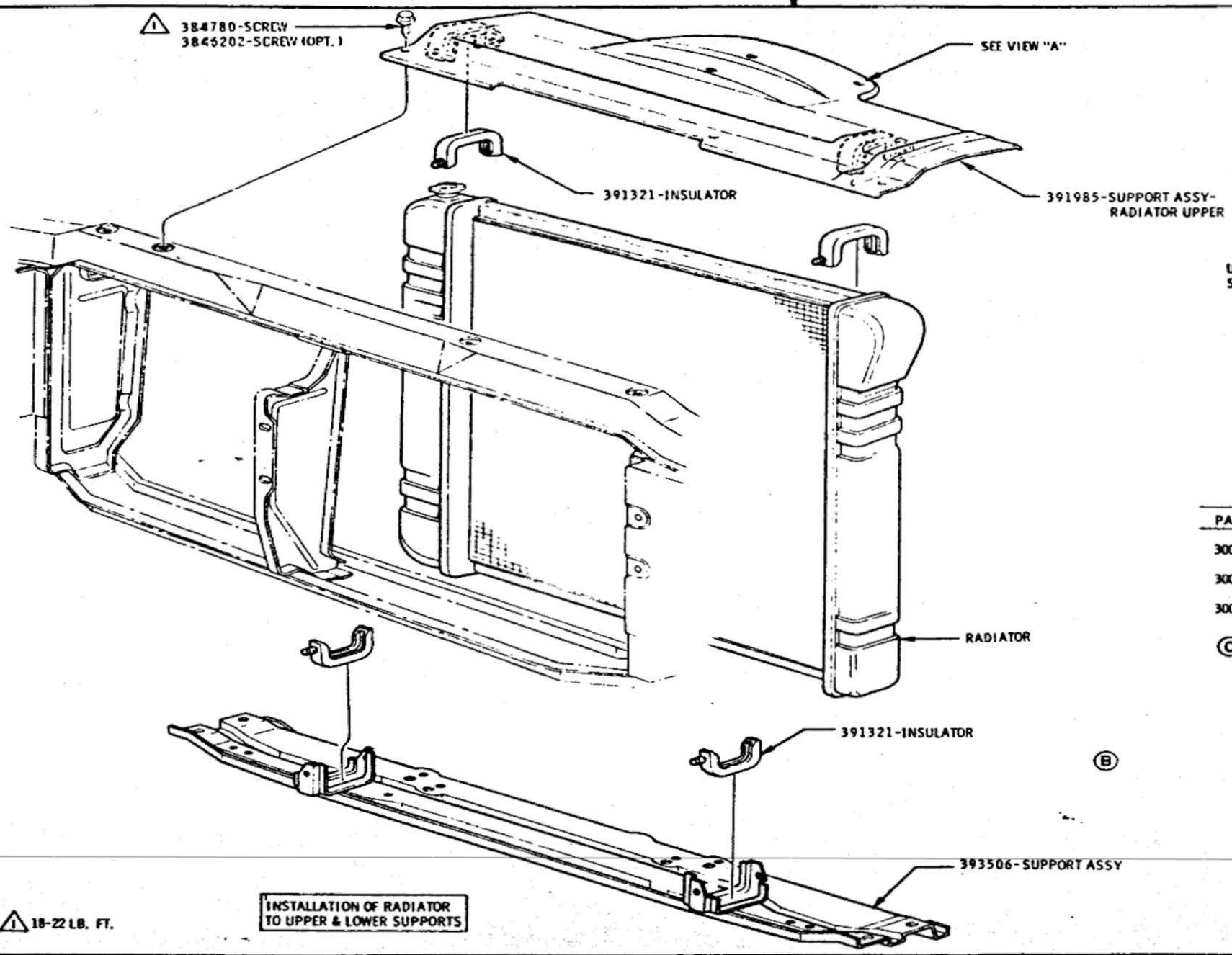

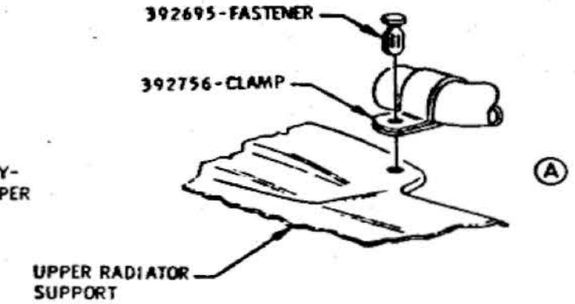

RADIATOR IDENTIFICATION

PART NO.	IDENTIFICATION NO.	APPLICATION
3005840	240FL	L6 SMT
3005841	241FN	L6 AMT
3005842	242FO	L6 A/C

C

ADD 1 PELLET OF 9985116-SEALER
OR 2 PELLETS OF 9985040-SEALER
IN RADIATOR

1 18-22 LB. FT.

INSTALLATION OF RADIATOR
TO UPPER & LOWER SUPPORTS

RADIATOR TO UPPER
& LOWER SUPPORTS - L6

DATE	SYM	REVISION	DR.	CK.	DATE	SYM	REVISION	DR.	CK.	DATE	SYM	REVISION	DR.	CK.
										2-24-66	C	NOTE ADDED	KL	DT
										8-10-65	B	BOARD REF'D & BRACKET	CG	VP
										4-29-65	A	SEAL HOLD. REMOVED FROM "A" VIEW	CG	VP

INSTALLATION SHEET METAL

DATE FEBRUARY 17 1965
DR. BY G. KESTER
CHECKED H. VAN FELT
APPR.
APPR.

FIRST USED 1966

Oldsmobile Service ILLUSTRATION

SERIES A

REF. 13 B

PAGE 11-2.5

PART NO. 589998

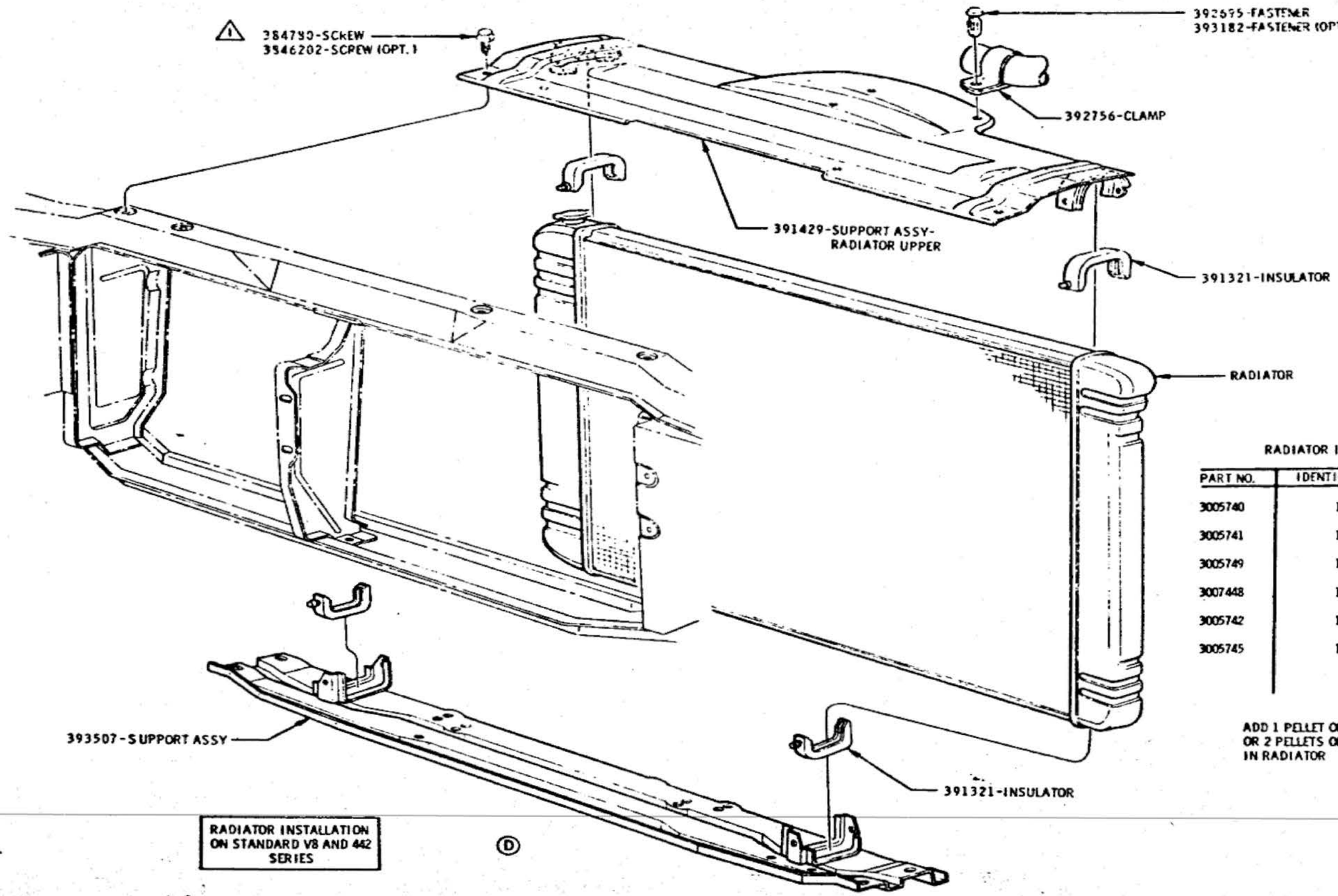

RADIATOR IDENTIFICATION

PART NO.	IDENTIFICATION NO.	APPLICATION
3005740	140FR	
3005741	141FS	
3005749	149FT	SEE PARTS LIST FOR MODEL USAGE
3007448	148FG	
3005742	142FH	
3005745	145FU	Ⓔ

ADD 1 PELLET OF 9985116-SEALER Ⓕ
OR 2 PELLETS OF 9985040-SEALER
IN RADIATOR

⚠1 18-22 LB. FT.

RADIATOR INSTALLATION ON STANDARD V8 AND 442 SERIES

Ⓓ

RADIATOR MOUNTING
STD. V8 & 442 SERIES

DATE	SYM	REVISION	DR.	CK.	DATE	SYM	REVISION	DR.	CK.	DATE	SYM	REVISION	DR.	CK.
										2-5-66	E	RAD. IDENT. CHART REV.	GK	DT
										8-10-65	D	BOARD REV'D & REDRAWN	CB	VP
										6-28-65	C	393182 FASTENER ADDED	CB	DT
										5-11-65	B	RAD. IDENT. CHART REV.	GK	VP
					2-24-66	F	NOTE ADDED	JJ	DT	4-26-65	A	SEAL INFO. REMOVED-VIEW 'A' ADDED	RB	VP

INSTALLATION SHEET METAL

DATE FEB. 17, 1965
DR. BY G. FESTER
CHECKED H. VAN PELT
APPR.
APPR.

FIRST USED 1966

Oldsmobile Service ILLUSTRATION

SERIES A

REF. 198 35W29 4A

PAGE 11-2.6

PART NO. 589998

OLDSMOBILE DIVISION GENERAL MOTORS CORPORATION LANSING — MICHIGAN

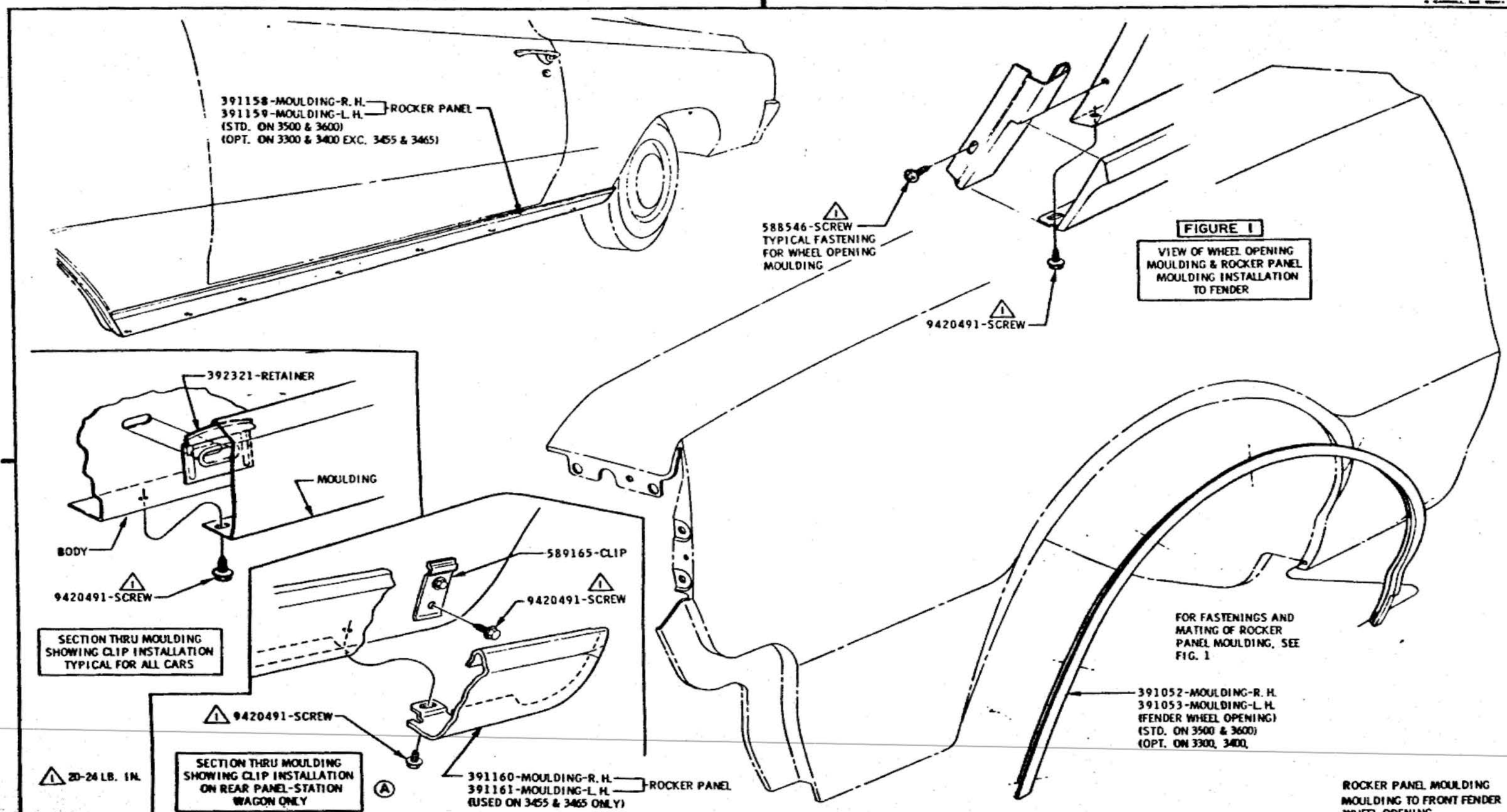

DATE	SYM	REVISION	DR.	CK.	DATE	SYM	REVISION	DR.	CK.	DATE	SYM	REVISION	DR.	CK.
										1-14-66	A	VIEW REDRAWN & REVISED	DW	DT

INSTALLATION — SHEET METAL

DATE FEB. 17, 1965
DR. BY G. KESTER
CHECKED H. VAN PELT
APPR.
APPR.

FIRST USED 1966 — Oldsmobile GRAPHIC ILLUSTRATION

SERIES A — REF. 1A2F 85Y68

PAGE 11-2.7

PART NO. 5899

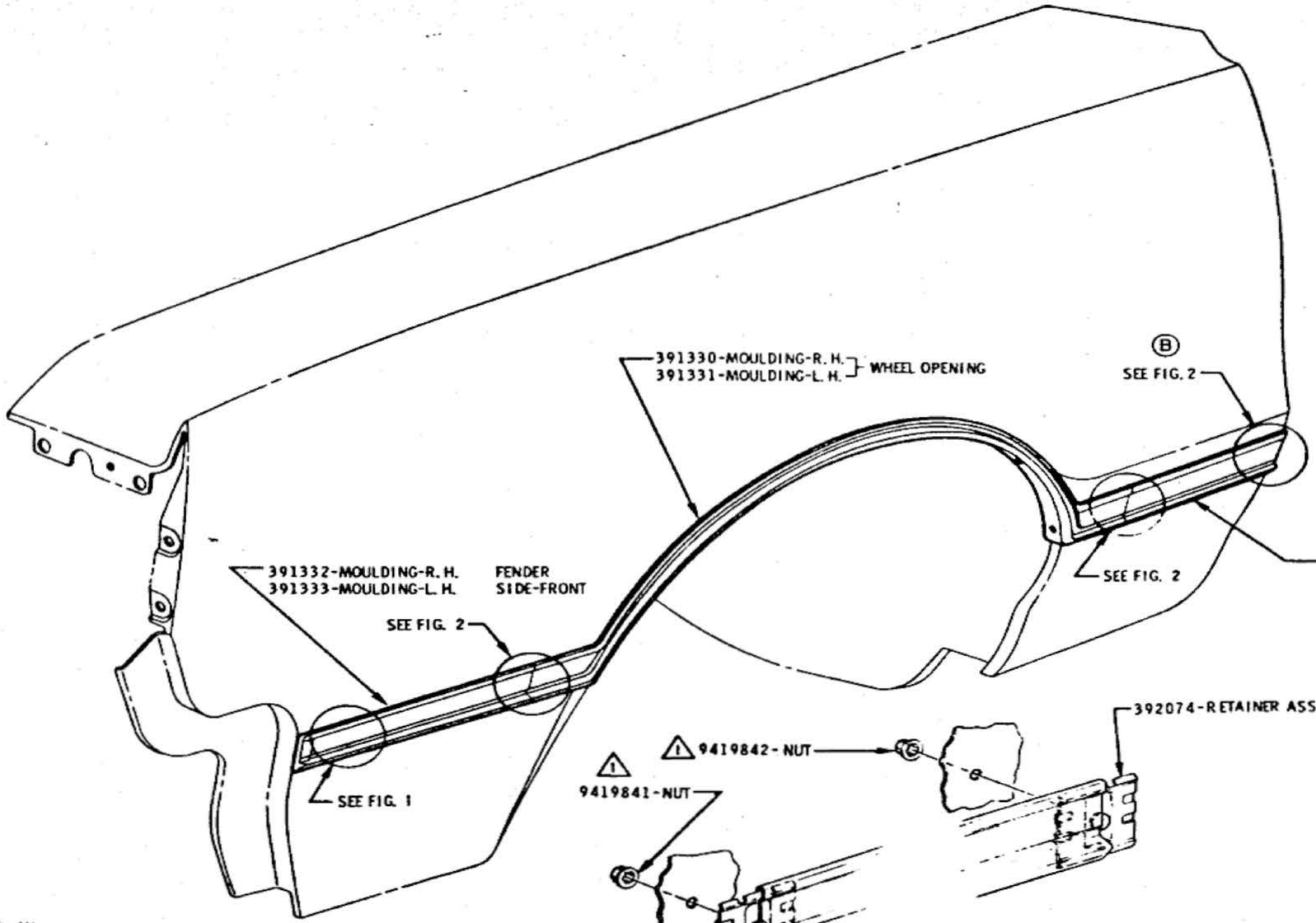

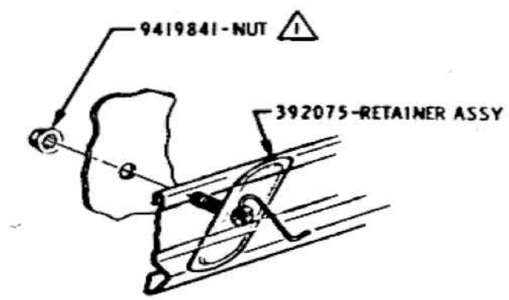

FIGURE 1

TYPICAL MOULDING FASTENING

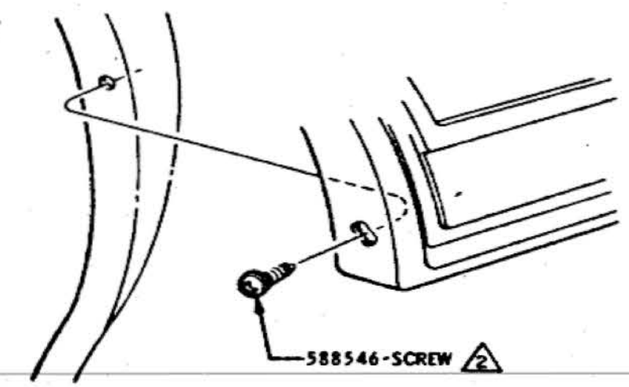

1 28-35 LB. IN.

2 20-24 LB. IN.

INSTALLATION FRONT FENDER WHEEL OPENING AND SIDE MOULDINGS

FIGURE 2

FASTENING FOR ENDS OF WHEEL MOULDING & SIDE MOULDINGS TO FENDER PANEL

TYPICAL FASTENING MOULDING TO FENDER

MOULDINGS TO FRONT FENDER

DATE	SYM	REVISION	DR.	CK.	DATE	SYM	REVISION	DR.	CK.	DATE	SYM	REVISION	DR.	CK.
										9-9-66	B	FASTENINGS REV.	DRDT	
										8-30-65	A	VIEW REM'D. & NOTES REV.	GRUP	

INSTALLATION SHEET METAL

DATE FEB. 17. 1965

DR. BY G. KESTEE

CHECKED H. VAN PELT

APPR.

APPR.

FIRST USED 1966

Oldsmobile Service ILLUSTRATION

SERIES A

REF. 11G

PAGE 11-2.8

PART NO. 589998

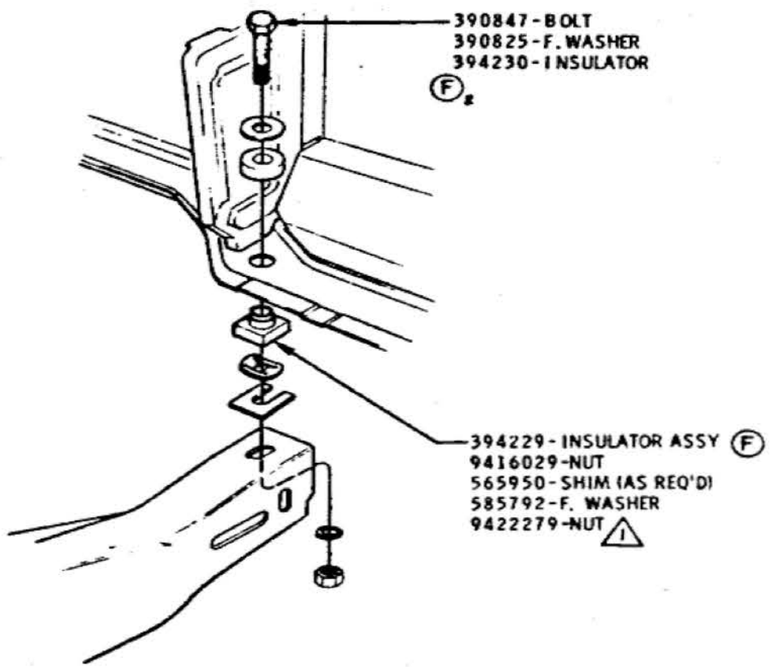

RADIATOR SUPPORT ASSY TO FRAME

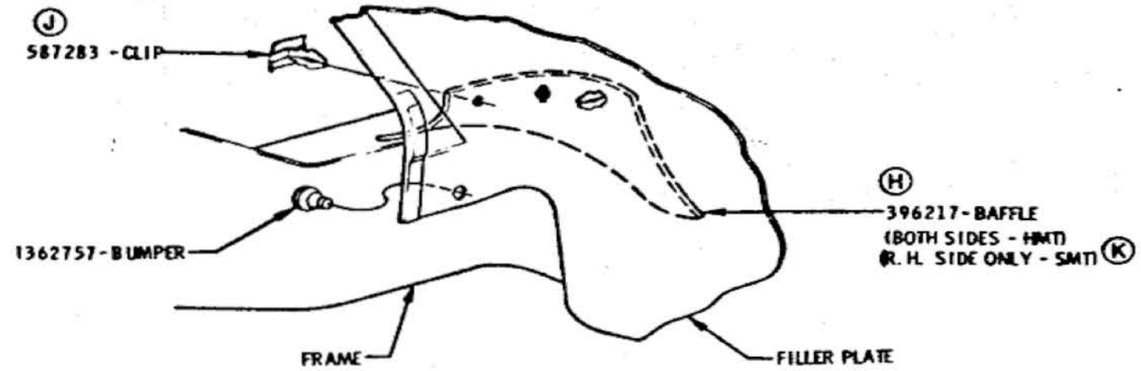

BAFFLE FASTENING TO FILLER PLATE

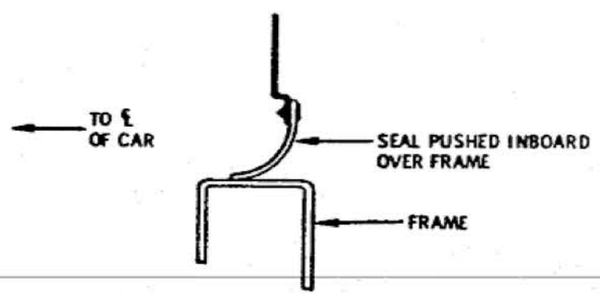

SECTION A-A

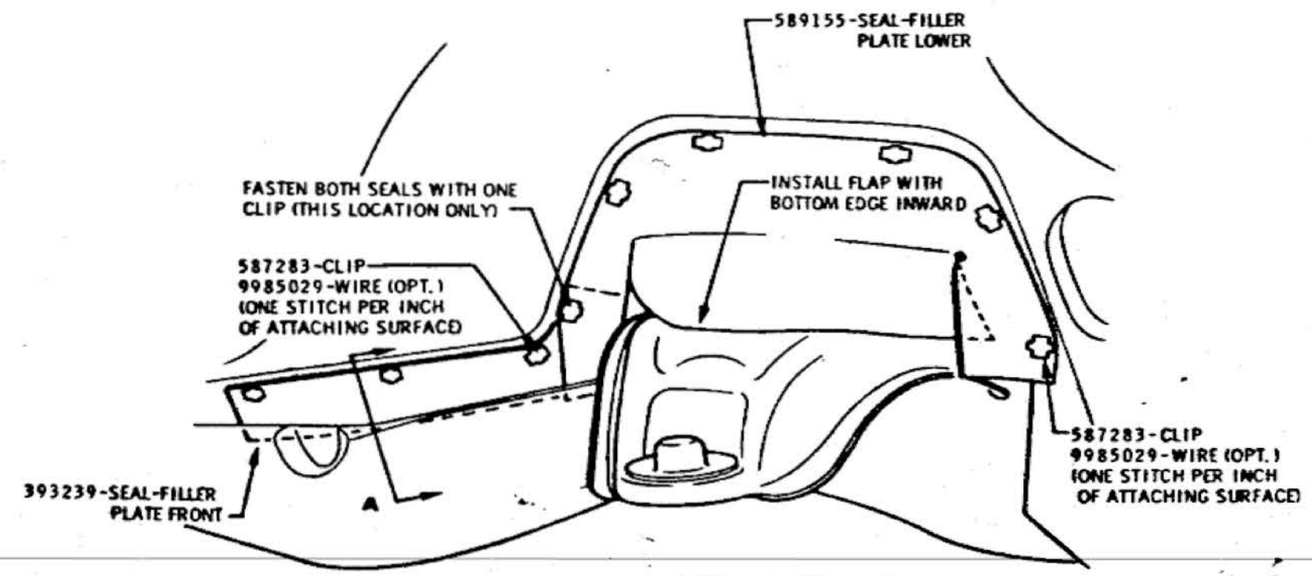

SEAL INSTALLATION TO FILLER PLATE

(1) 35-40 LB. FT.

SEALS, & SUPPORT MOUNTING

DATE	SYM	REVISION	DR.	CK.	DATE	SYM	REVISION	DR.	CK.	DATE	SYM	REVISION	DR.	CK.
					5-2-66	K	NOTE REVISED	GK	DT	5-11-65	E	BUMPER ADDED	GK	VP
					2-24-66	J	WAS 9419727 SCREW	GK	DT	5-14-65	D	WAS 589244 SEAL	CG	VP
					2-24-66	H	WAS 3932104 & 11 BAFFLE	GK	DT	5-10-65	C	VIEW ADDED	GK	VP
					9-22-65	G	WAS 560063 F. WASHER	GK	DT	4-20-65	B	TORQUE ADDED	GK	DT
					8-25-65	F	WAS 380769 & 64 INS.	GK	VP	4-20-65	A	WAS 589283-CLIP	GK	DT

INSTALLATION — SHEET METAL

DATE FEB. 17, 1965
DR. BY G. KESTER
CHECKED R. VAN PELT
APPR.
APPR.

FIRST USED 1966

Oldsmobile GRAPHIC ILLUSTRATION

SERIES A

REV. 11E

PAGE 11-2.9

PART NO. 589998

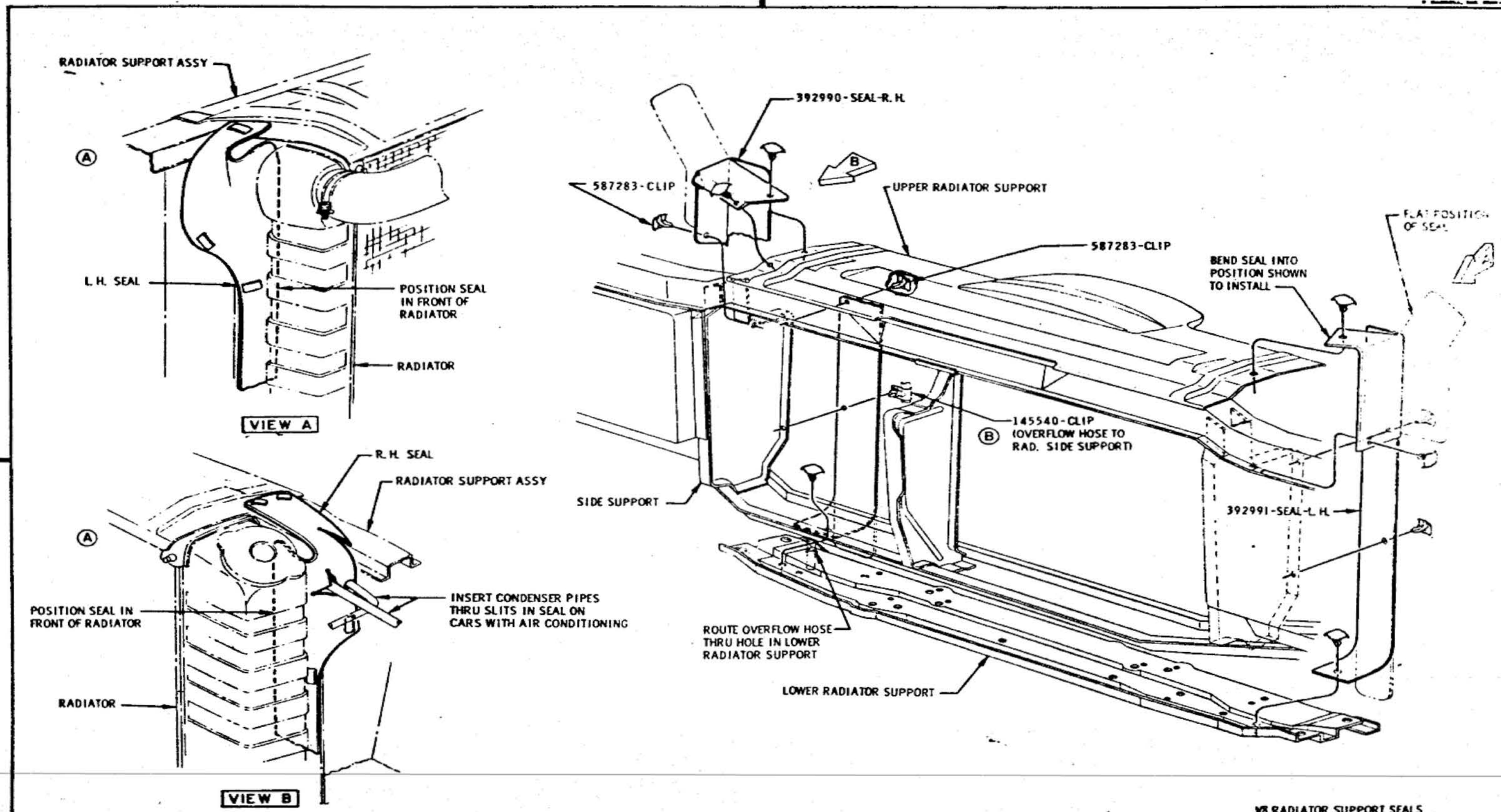

V8 RADIATOR SUPPORT SEALS

DATE	SYM	REVISION	DR.	CK.	DATE	SYM	REVISION	DR.	CK.	DATE	SYM	REVISION	DR.	CK.
										9-29-65	B	WAS 587283-CLIP	SL	DT
										9-28-65	A	VIEWS ADDED	CB	DT

INSTALLATION **SHEET METAL**

DATE APRIL 28, 1965
DR. BY G. VILLENEUVE
CHECKED H. VAN PELT
APPR. [illegible]
APPR.

FIRST USED 1966

Oldsmobile Service ILLUSTRATION

SERIES A

REF. 13C

PAGE 11-2.10

PART NO. 589998

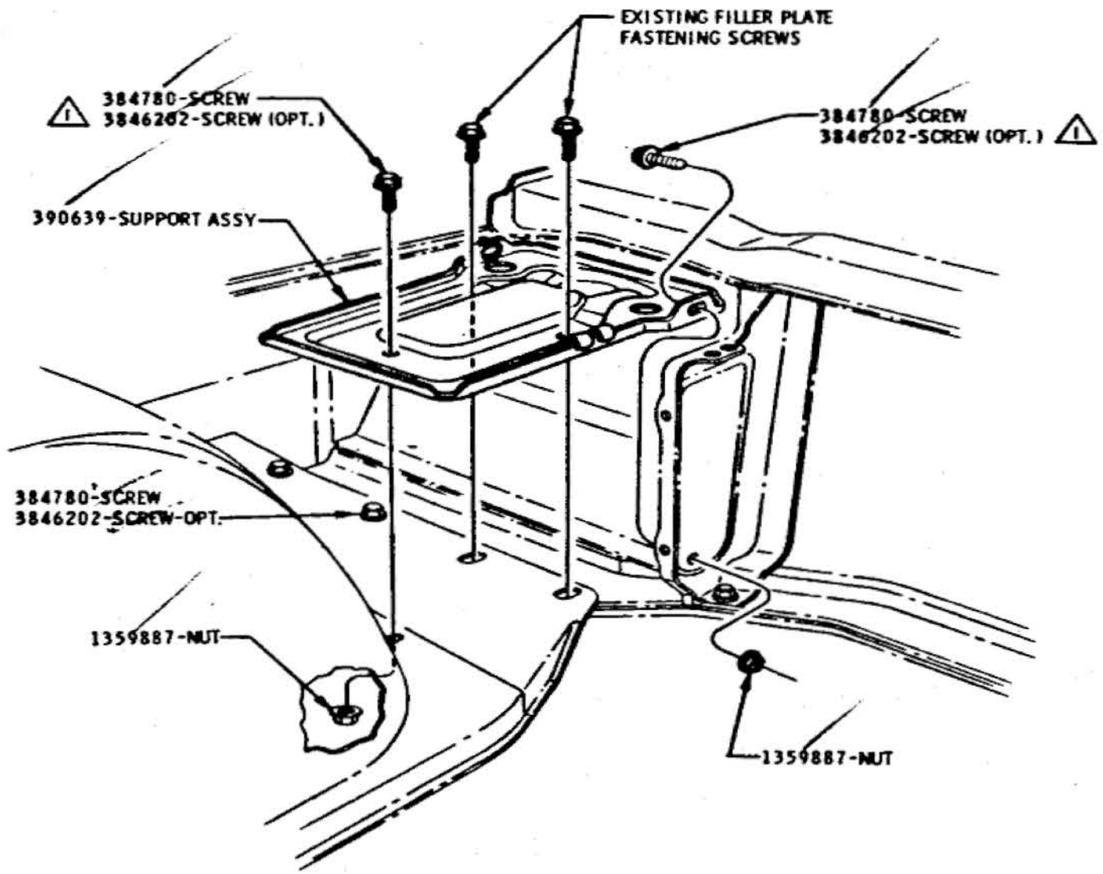

INSTALLATION OF BATTERY SUPPORT V8 ONLY-L.H. SIDE

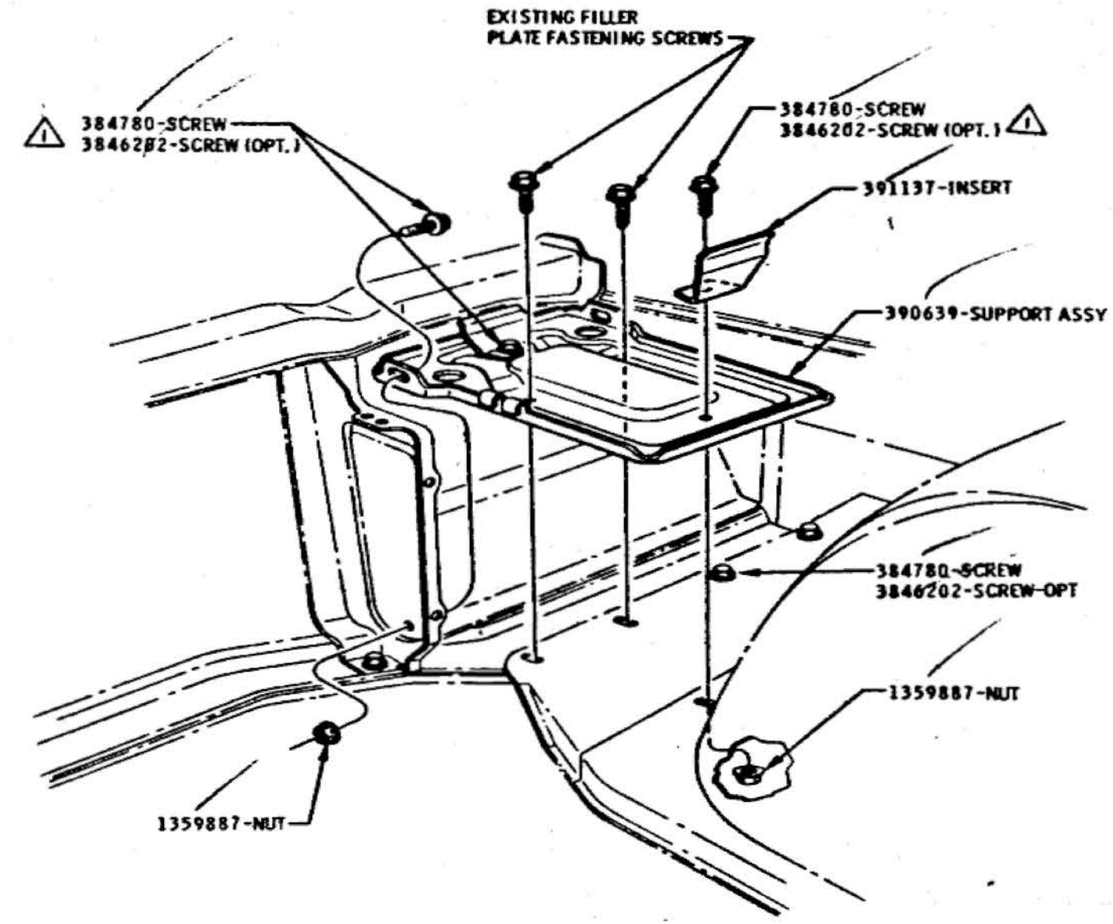

INSTALLATION OF BATTERY SUPPORT L6 ONLY-R.H. SIDE

18-22 LB. FT.

BATTERY SUPPORTS

DATE	SYM	REVISION	DR.	CK.	DATE	SYM	REVISION	DR.	CK.	DATE	SYM	REVISION	DR.	CK.

INSTALLATION SHEET METAL

DATE FEB. 17. 1965
DR. BY G. KESTER
CHECKED H. VAN PELT
APPR.
APPR.

FIRST USED 1966 — Oldsmobile Service ILLUSTRATION

SERIES A — REF. 120

PAGE 11-2.11

PART NO. 589998

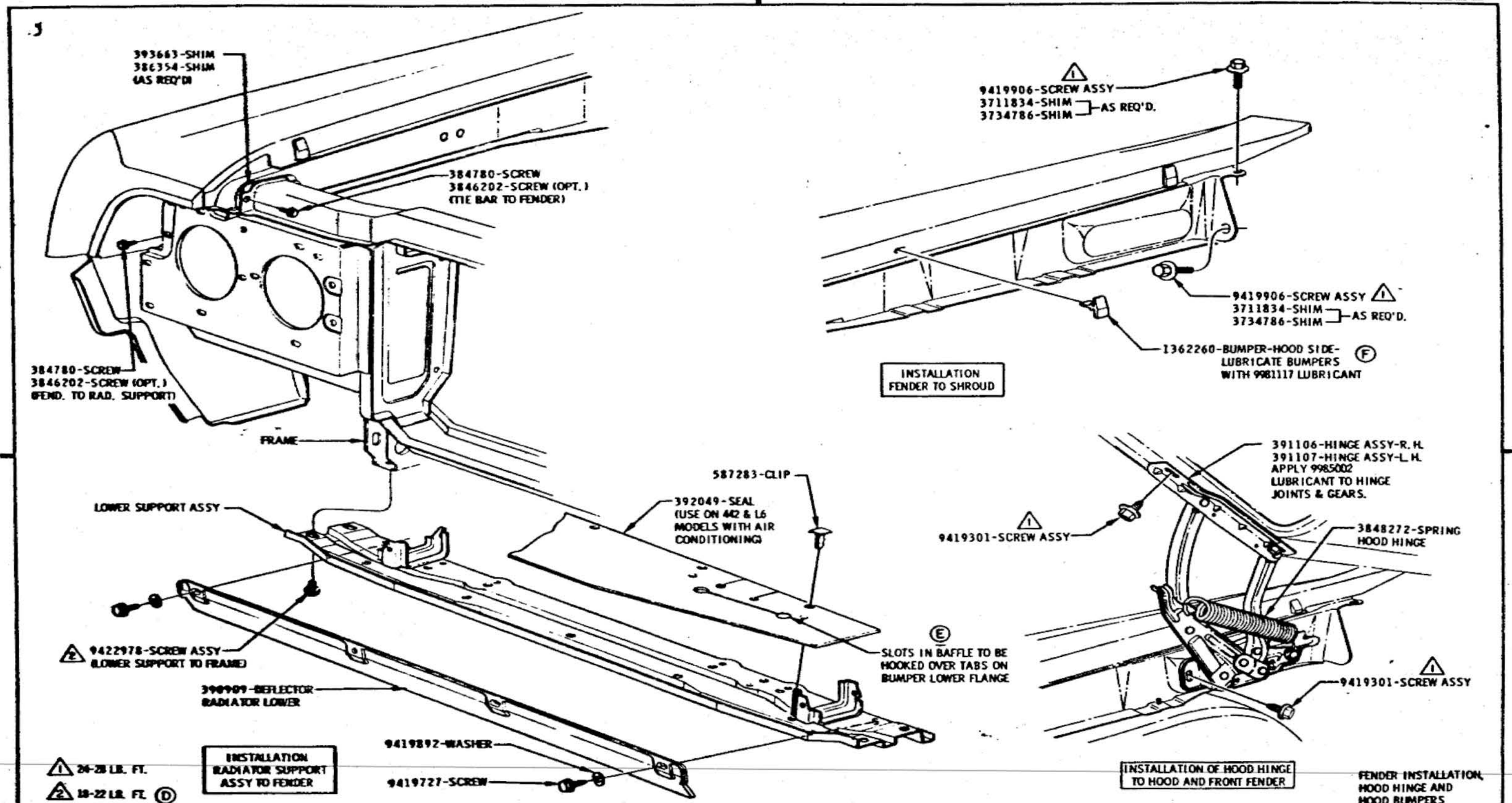

FENDER INSTALLATION, HOOD HINGE AND HOOD BUMPERS

DATE	SYM	REVISION	DR.	CK.	DATE	SYM	REVISION	DR.	CK.	DATE	SYM	REVISION	DR.	CK.
										10-14-65	E	NOTE ADDED	DK	DT
										9-20-65	D	TORQUE ADDED	RL	DT
										8-10-65	C	WAS 389793 SUPPORT	CB	VP
										6-22-65	B	393663 SHIM ADDED	RI	DT
					12-7-65	F	LUBRICANT NOTE ADDED	CM	DT	4-27-65	A	BAFFLE ADDED	CK	VP

INSTALLATION	SHEET METAL		
DATE FEB. 17, 1965	FIRST USED 1966	Oldsmobile GRAPHIC ILLUSTRATION	PAGE 11-2.12
DR. BY G. KESTER	SERIES A	REF. 11A 11D-11E	PART NO. 589998
CHECKED H. VAN PELT			
APPR.			

OLDSMOBILE DIVISION GENERAL MOTORS CORPORATION LANSING — MICHIGAN

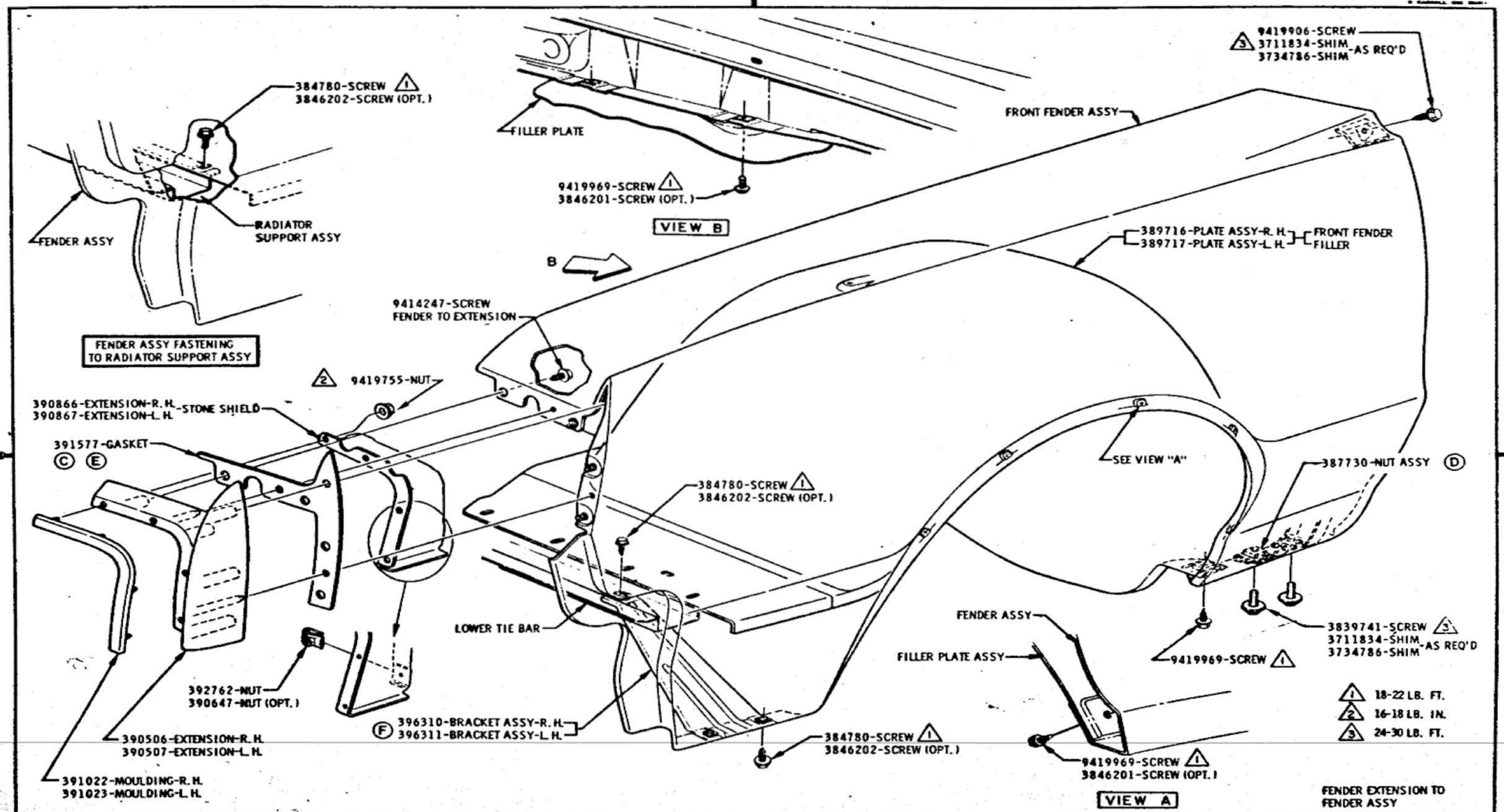

DATE	SYM	REVISION	DR.	CK.	DATE	SYM	REVISION	DR.	CK.	DATE	SYM	REVISION	DR.	CK.
										12-10-65	E	GASKET REVISED		DT
										10-22-65	D	WAS 3843236 NUT ASSY		DT
										9-29-65	C	GASKET REV. TO DETAIL		DT
										8-30-65	B	REDRAWN		FV
					2-17-66	F	WAS 391096 BELT ASSY			4-7-65	A	WAS 388832 NUT		VP

INSTALLATION	SHEET METAL		
DATE FEB. 17, 1965	FIRST USED 1966	Oldsmobile Graphic ILLUSTRATION	PAGE 11-2.13
DR. BY S. KESTER			
CHECKED H. VAN PELT	SERIES A	REF. 11A-11E 11G	PART NO. 589998
APPR.			
APPR.			

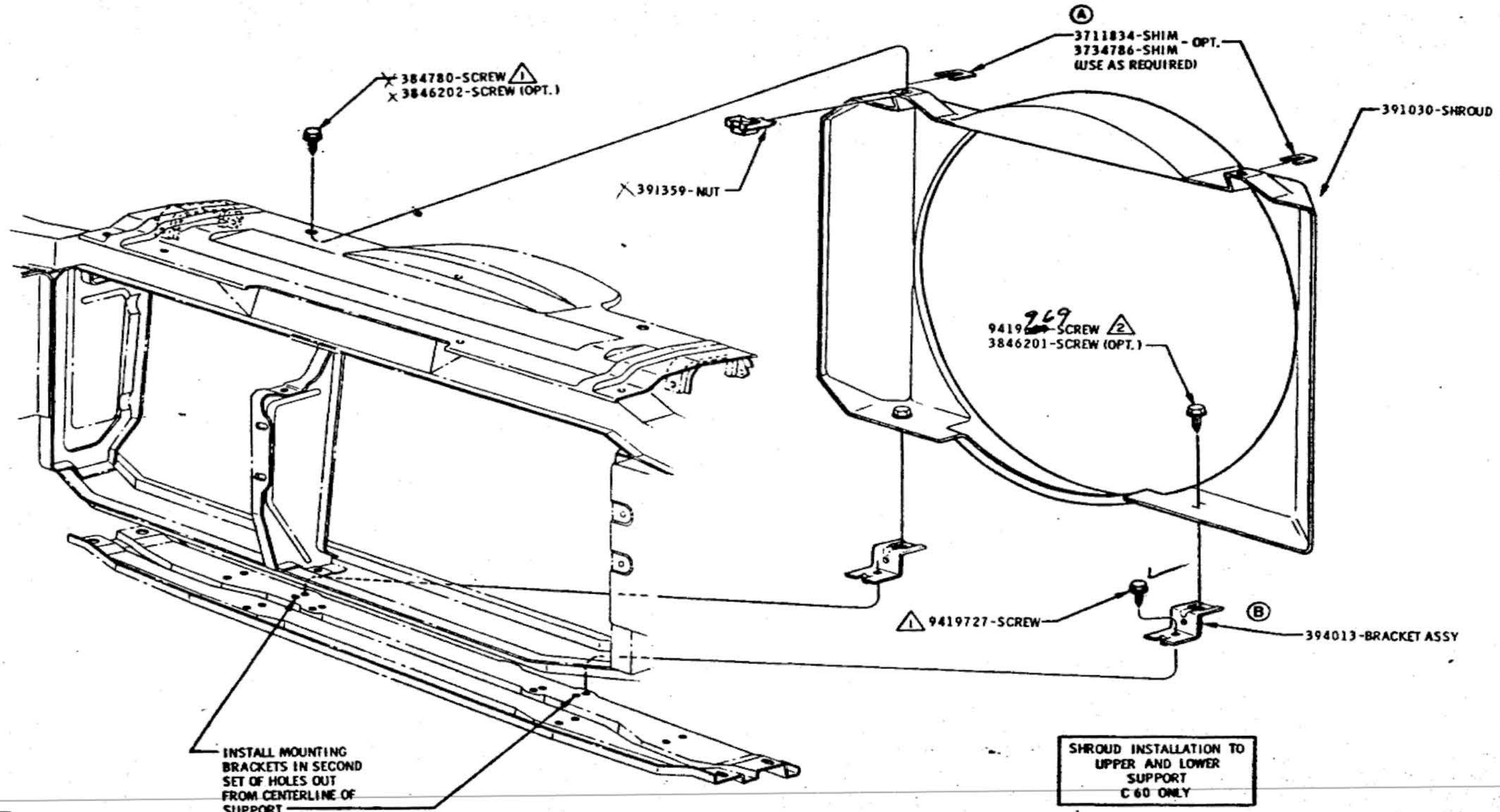

SHROUD INSTALLATION TO UPPER AND LOWER SUPPORT C 60 ONLY

2 18-22 LB. FT.

1 5-8 LB. FT.

SHROUD TO UPPER & LOWER SUPPORTS STD. V8 & 442

DATE	SYM	REVISION	DR.	CK.	DATE	SYM	REVISION	DR.	CK.	DATE	SYM	REVISION	DR.	CK.
										8-18-65	B	SHROUD FASTENING REV.	G.R.	VP
										5-10-65	A	SHIMS ADDED	G.R.	VP

INSTALLATION **SHEET METAL**

DATE FEB. 17. 1965
DR. BY G. KESTER
CHECKED H. VAN PELT
APPR.
APPR.

FIRST USED 1966 — Oldsmobile Graphic Illustration

SERIES A — REF. 85Y76

PAGE 11-2.14

PART NO. 589998

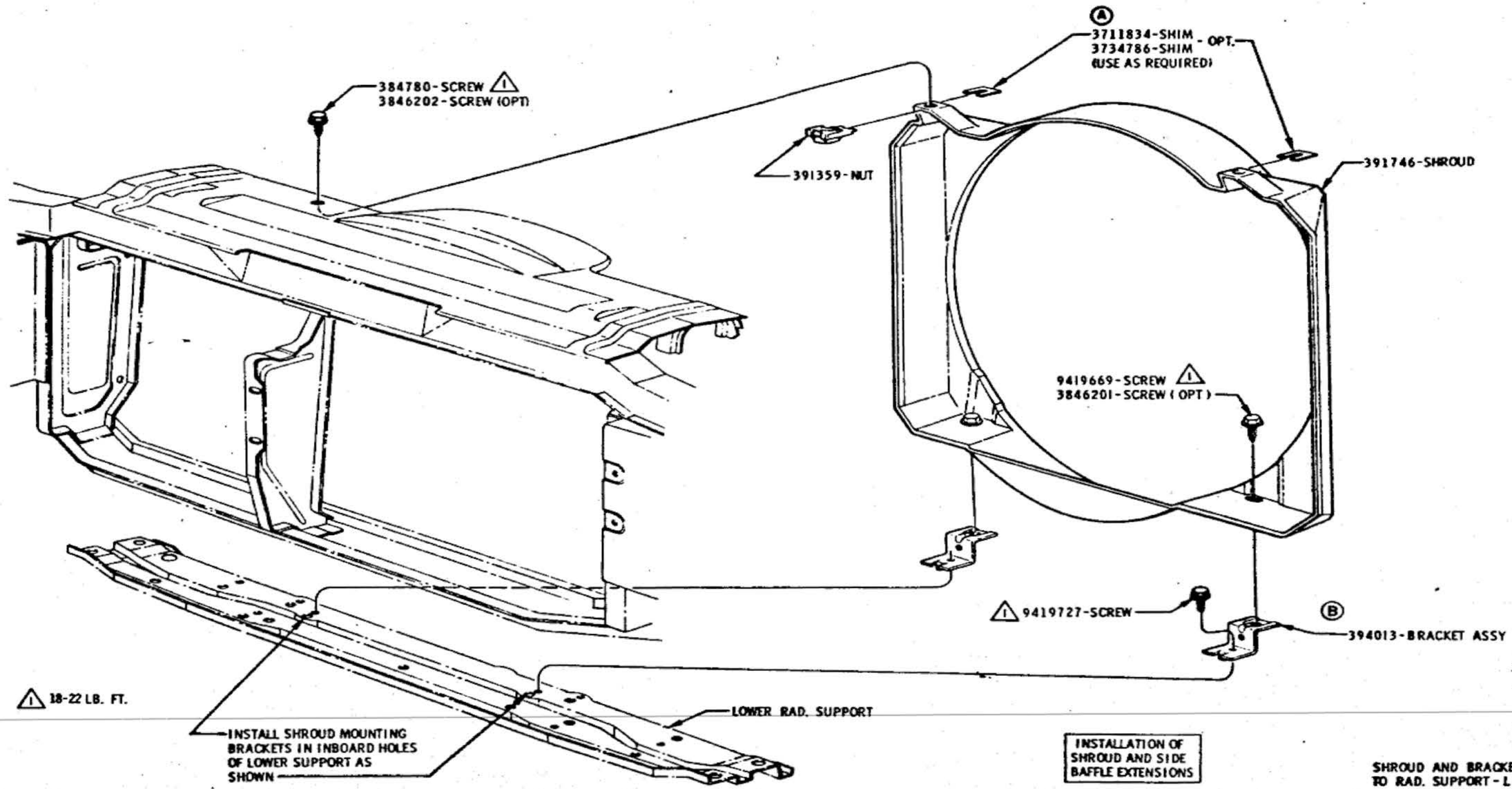

INSTALLATION OF SHROUD AND SIDE BAFFLE EXTENSIONS

SHROUD AND BRACKETS TO RAD. SUPPORT - L6 C 60 ONLY

DATE	SYM	REVISION	DR.	CK.	DATE	SYM	REVISION	DR.	CK.	DATE	SYM	REVISION	DR.	CK.
										8-18-65	B	SHROUD FASTENING REV.	SK	VP
										5-10-65	A	SHIMS ADDED	SK	VP

INSTALLATION **SHEET METAL**

DATE FEB. 17, 1965
DR. BY G. KESTER
CHECKED H. VAN PELT
APPR.
APPR.

FIRST USED 1966 — Oldsmobile Classic ILLUSTRATION

SERIES A — REF. 85C60

PAGE 11-2.15

PART NO. 589998

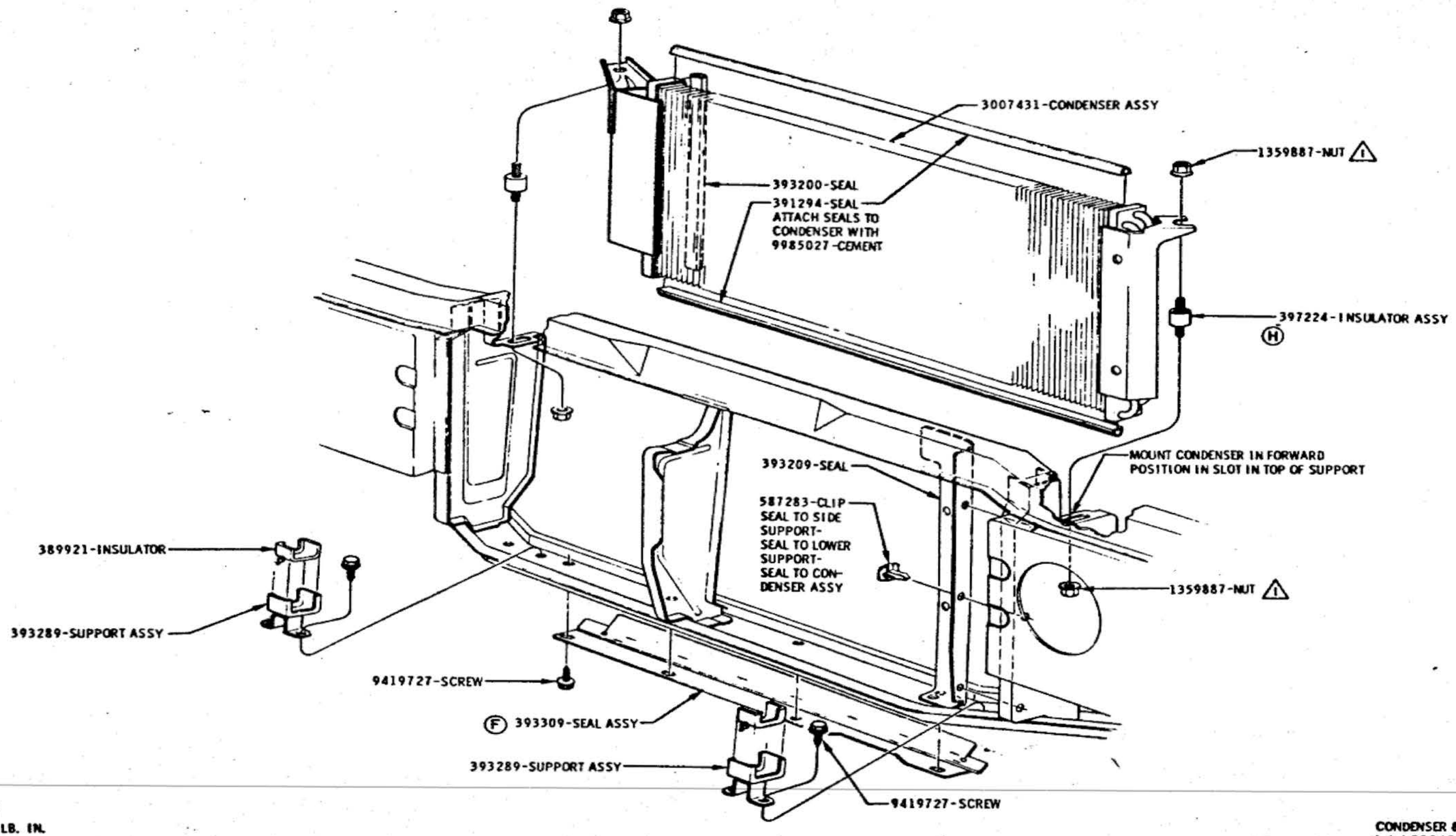

Ⓖ △1 120-180 LB. IN.

CONDENSER & SUPPORTS
L6 (35C60 ONLY)

DATE	SYM	REVISION	DR.	CK.	DATE	SYM	REVISION	DR.	CK.	DATE	SYM	REVISION	DR.	CK.
										5-19-65	E	SEAL & FASTENINGS ADD.	GR	VP
										5-19-65	D_2	WAS 391298 & 99 SUPPORT	GR	VP
					4-16-66	H	WAS M80250 MOUNT ASSY	GC	DT	5-10-65	C	SEALS ADDED	GR	VP
					12-9-65	G	TORQUE ADDED	GR	DT	4-30-65	B	SEAL & CLIP ADDED	GR	VP
					11-3-65	F	REVISED TO DETAIL	GR	DT	4-30-65	A	NOTE REVISED	GR	VP

INSTALLATION SHEET METAL

DATE FEB. 18, 1965
DR. BY G. KESTER
CHECKED H. VAN PELT
APPR.
APPR.

FIRST USED 1966
Oldsmobile Service ILLUSTRATION
SERIES A
REF. 35C60
PAGE 11-2.16
PART NO. 589998

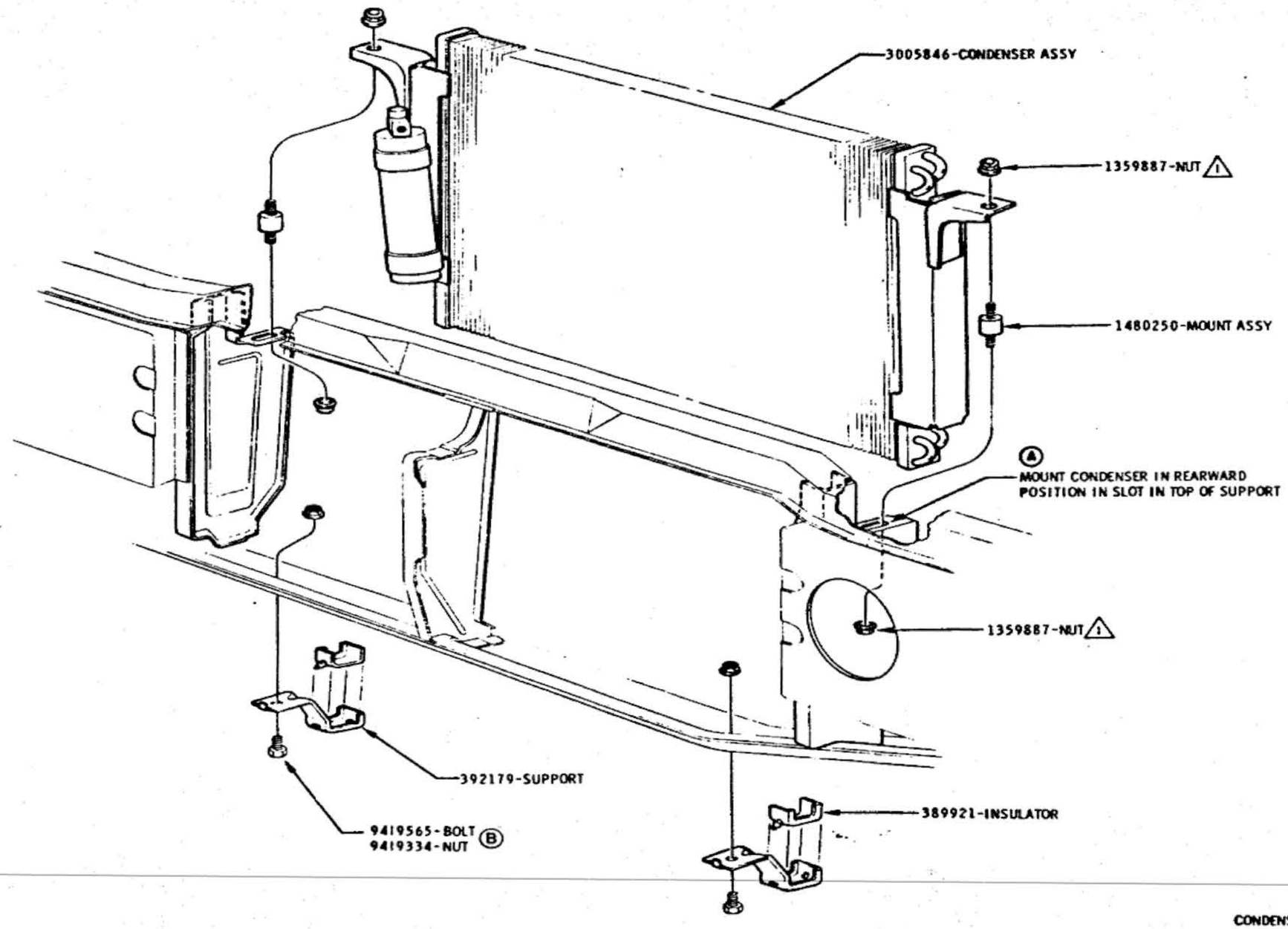

Ⓒ △1 120-180 LB. IN.

CONDENSER & SUPPORTS - V8

DATE	SYM	REVISION	DR.	CK.	DATE	SYM	REVISION	DR.	CK.	DATE	SYM	REVISION	DR.	CK.
										12-3-65	C	TORQUE ADDED	RMH	DT
										7-30-65	B	WAS 9419727 SCREW	GK	VP
										4-30-65	A	NOTE REVISED	GK	VP

INSTALLATION SHEET METAL

DATE FEB. 25, 1965
DR. BY C BEACHNAU
CHECKED H. VAN PELT
APPR. F. E. Malitzke
APPR.

FIRST USED 1966 — Oldsmobile GRAPHIC ILLUSTRATION

SERIES A — REF. 35C60

PAGE 11-2.17

PART NO. 589998

OLDSMOBILE DIVISION GENERAL MOTORS CORPORATION LANSING — MICHIGAN

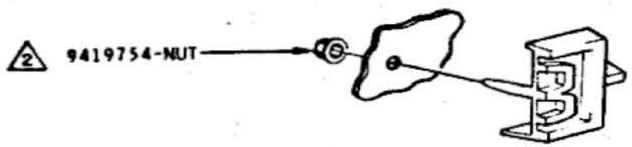

TYPICAL FASTENING EMBLEM TO FENDER

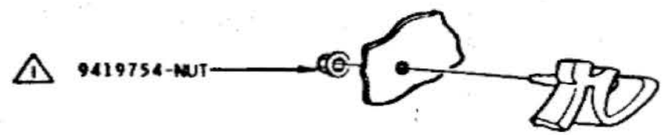

TYPICAL FASTENING SCRIPT TO FENDER

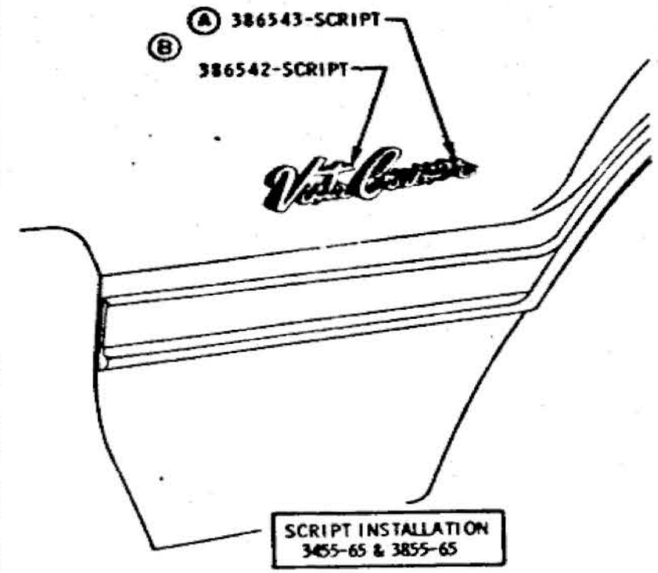

SCRIPT INSTALLATION
3455-65 & 3855-65

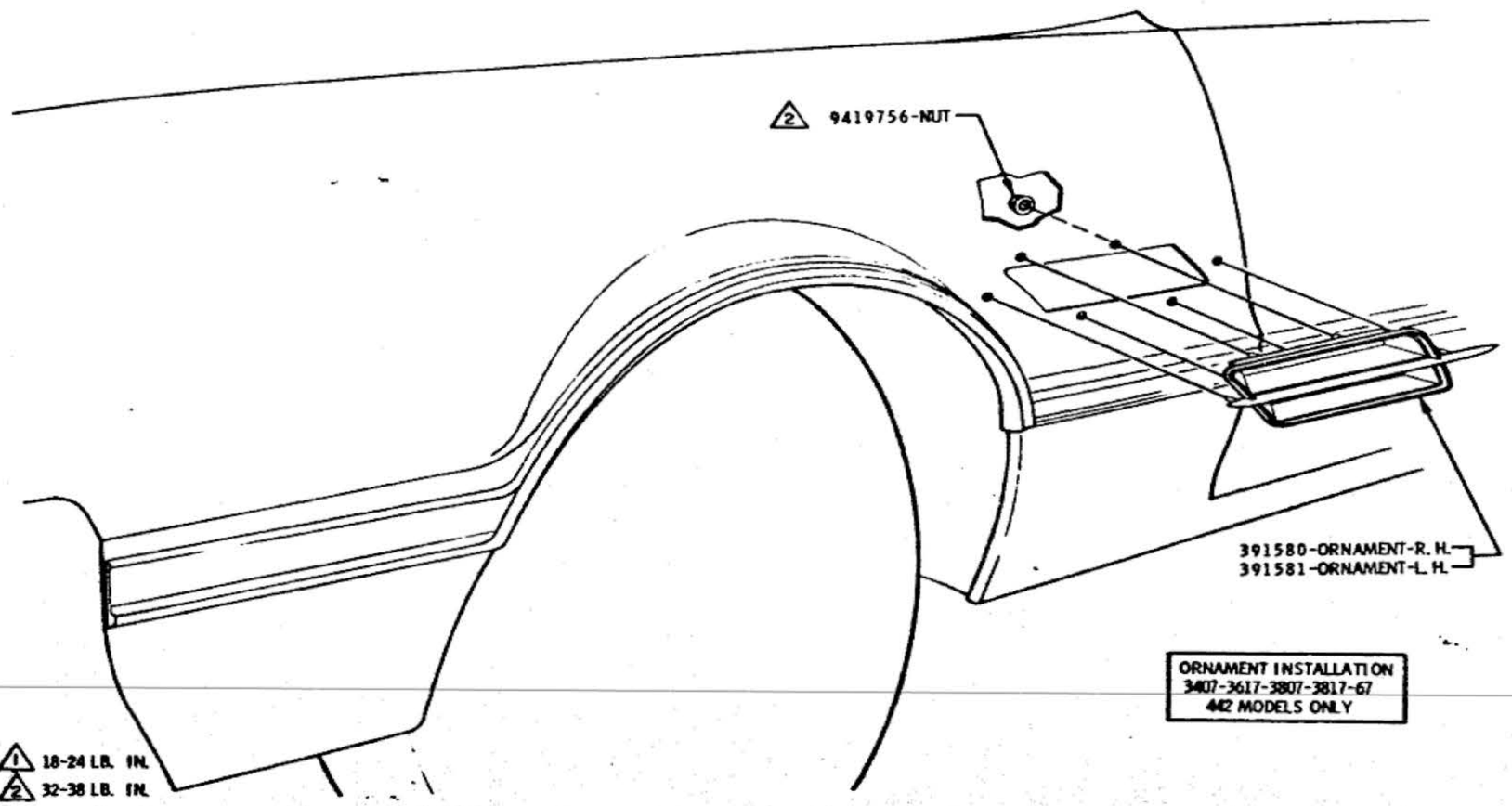

ORNAMENT INSTALLATION
3407-3617-3807-3817-67
442 MODELS ONLY

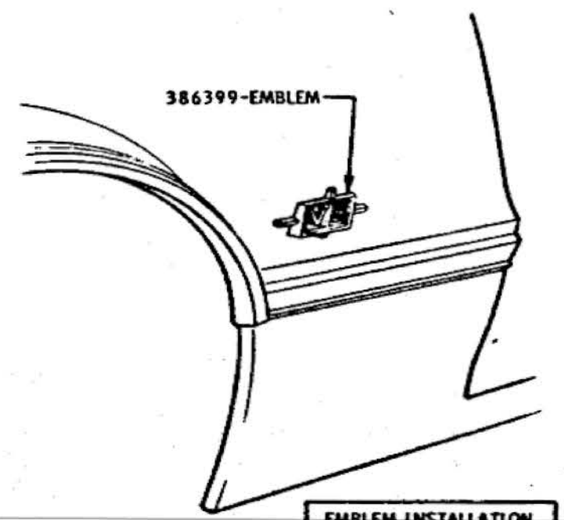

EMBLEM INSTALLATION
3400 & 3600 EXC. 3455-65
& 442 MODELS

SCRIPT, ORNAMENT & EMBLEM

DATE	SYM	REVISION	DR.	CK.	DATE	SYM	REVISION	DR.	CK.	DATE	SYM	REVISION	DR.	CK.
										7-19-65	B	SCRIPT RELOCATED	SHR	MB
										4-20-65	A	PART NO. ADDED	SK	DT

INSTALLATION **SHEET METAL**

DATE MAR. 5, 1965
DR. BY G. KESTEE
CHECKED H. VAN PELT
APPR.
APPR.

FIRST USED 1966 — Oldsmobile Service ILLUSTRATION

SERIES A — REF. 116 85 11 29

PAGE 11-2.19

PART NO. 589998

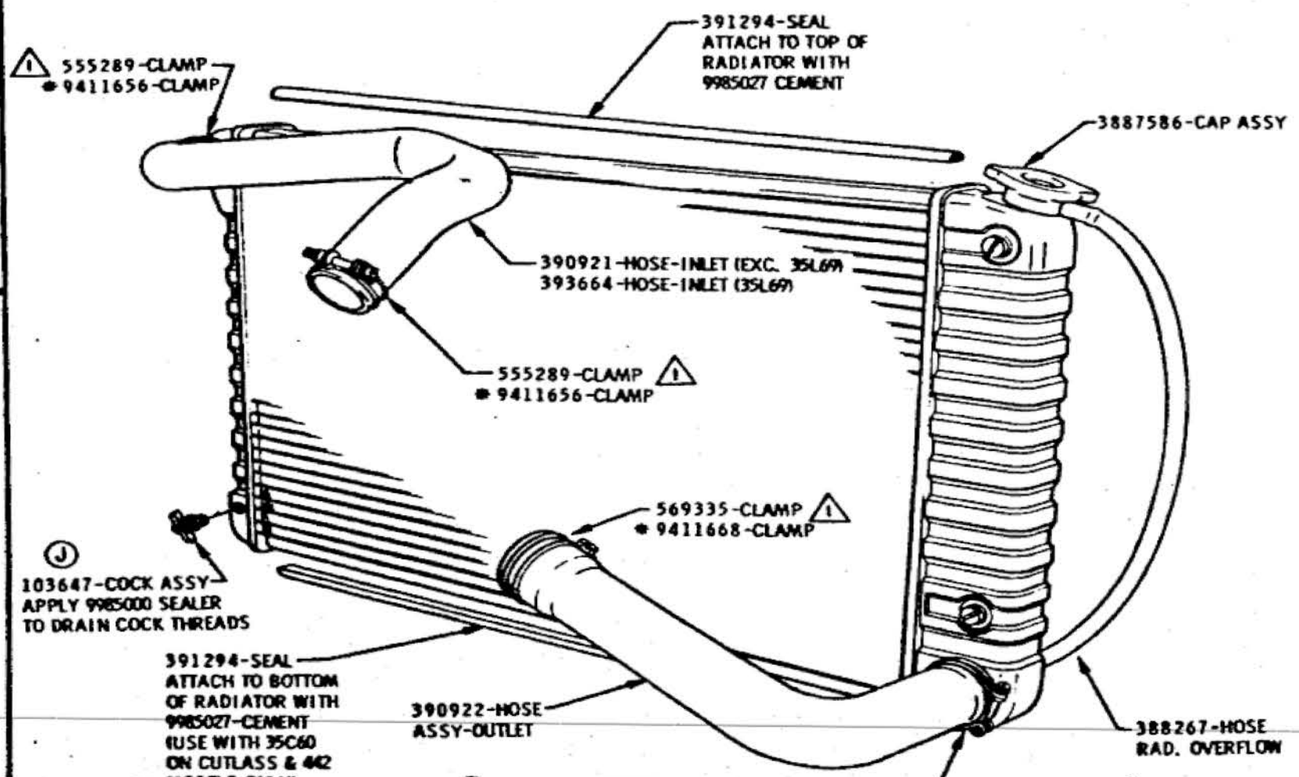

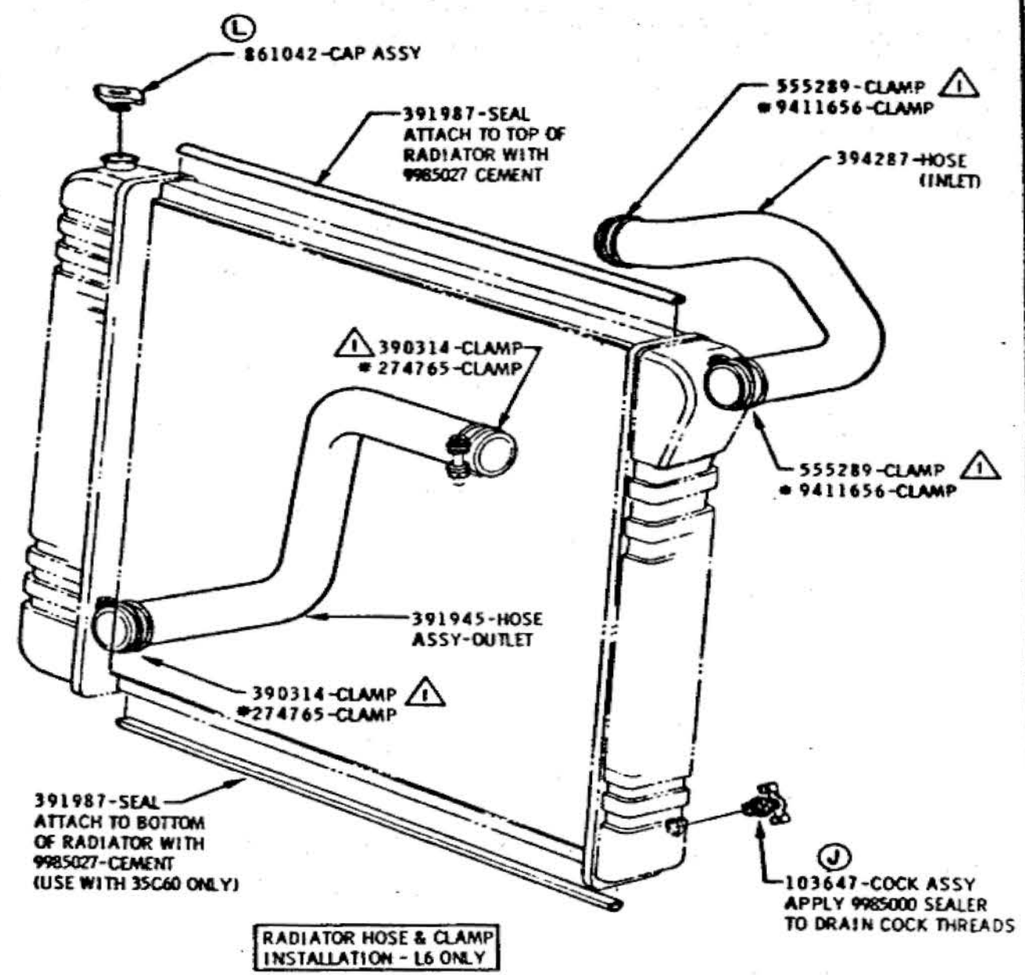

K NOTE: - COOLING SYSTEM IS TO BE PRESSURE CHECKED FOR LEAKS WITH 14 TO 17 LBS. AIR PRESSURE AT RADIATOR FILLER NECK.

NOTE: -
* CLAMP OPTION FOR G. M. A. D. ONLY

18-26 LB. IN.

RADIATOR CAP, HOSE & CLAMPS

DATE	SYM	REVISION	DR.	CK.	DATE	SYM	REVISION	DR.	CK.	DATE	SYM	REVISION	DR.	CK.
					12-2-66	K	NOTE ADDED		DT	9-1-65	E	WAS 391947-HOSE	GK	DT
					12-7-65	J	SEALER NOTES ADDED		DT	7-23-65	D	TORQUES ADDED	CG	VP
					11-17-65	H	WAS 392051-HOSE		DT	6-23-65	C	393664 HOSE ADDED	GC	DT
					10-6-65	G	WAS 861042 CAP ASSY		DT	4-29-65	B	SEALS ADDED	GK	VP
2-16-66	L	WAS 3887586 CAP ASSY			9-28-65	F	CLAMP OPT. ADDED		DT	4-24-65	A	SEALS ADDED	GK	VP

INSTALLATION SHEET METAL
DATE MAR. 5, 1965
DR. BY G. KESTER
CHECKED H. VAN PELT
APPR. J. [illegible]
APPR.

FIRST USED 1966
Oldsmobile GRAPHIC ILLUSTRATION
SERIES A
REF. 4K2 18G
PAGE 11-2.20
PART NO. 589998

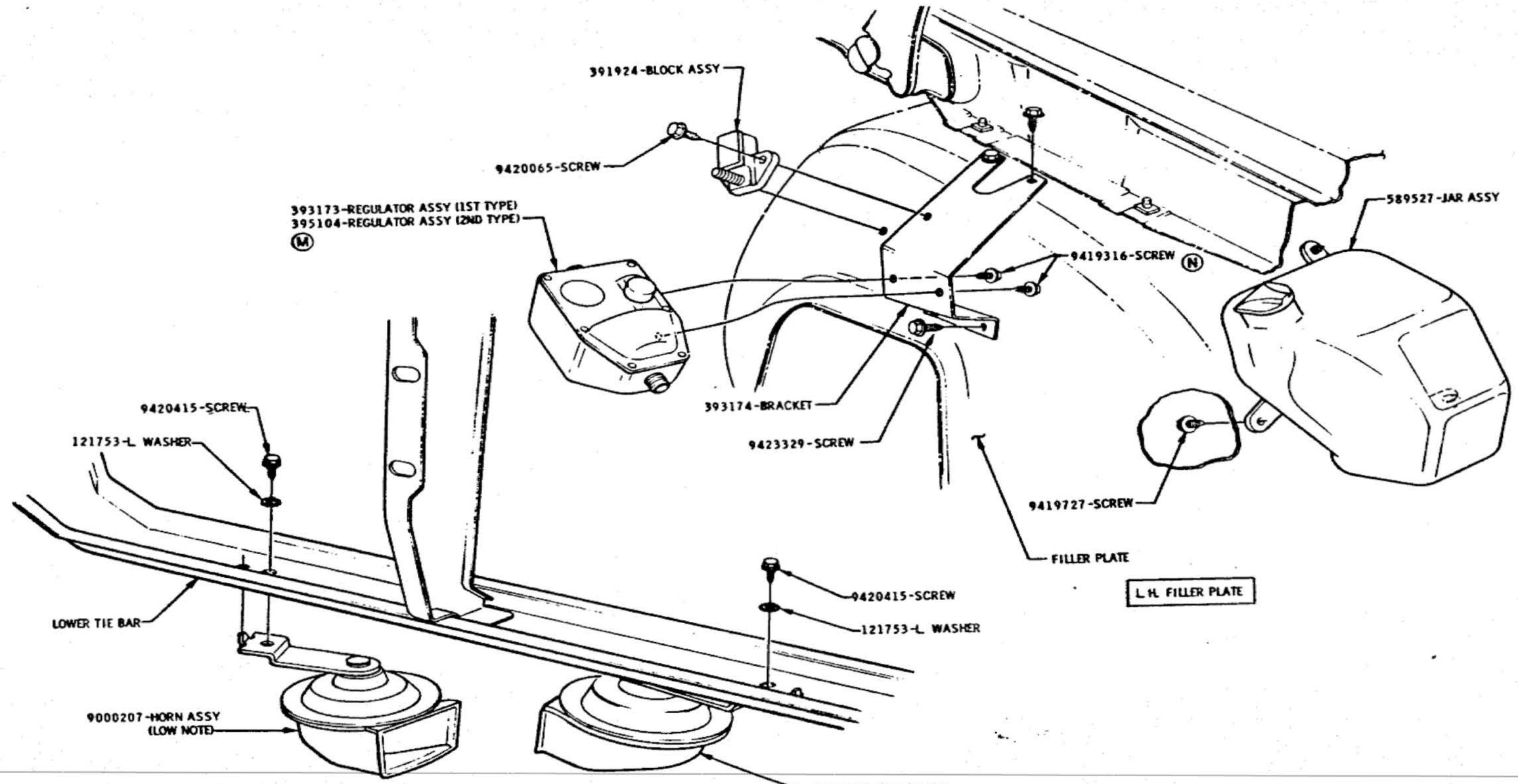

Ⓟ CUT OFF PAINTING TABS ON BOTH HORNS ON ALL MODELS WITH 35C60

HORN MOUNTING TO LOWER TIE BAR

JUNCTION BLOCK, 35K30 REGULATOR & BRACKET, HORNS AND WASHER BOTTLE

DATE	SYM	REVISION	DR.	CK.	DATE	SYM	REVISION	DR.	CK.	DATE	SYM	REVISION	DR.	CK.
					6-28-65	K	NOTE REMOVED		DT	6-11-65	E	WAS 589527-JAR		VP
4-14-66	P	NOTE REVISED		DT	6-23-65	J	9419380-SCREW ADDED		DT	5-24-65	D	VIEW REVISED		VP
1-6-66	N	WAS 9419380-SCREW			6-22-65	H	REVISED TO DETAIL		DT	5-13-65	C	SOLVENT BOTTLE REMV'D		VP
11-17-65	M	SECOND TYPE ADDED		DT	6-22-65	G	9419380-SCREW REMOVED		DT	4-22-65	B	VIEW REVISED		VP
11-3-65	L	NOTE ADDED		DT	6-22-65	F	WAS 9419400-SCREW		DT	4-22-65	A	VIEW ADDED		VP

INSTALLATION **SHEET METAL**

DATE FEB. 25, 1965
DR. BY G. KESTER
CHECKED H. VAN PELT
APPR. D. SEVERANCE
APPR.

FIRST USED 1966 — Oldsmobile Service ILLUSTRATION

SERIES A — REF. 126 #5C14

PAGE 11-2.21

PART NO. 589998

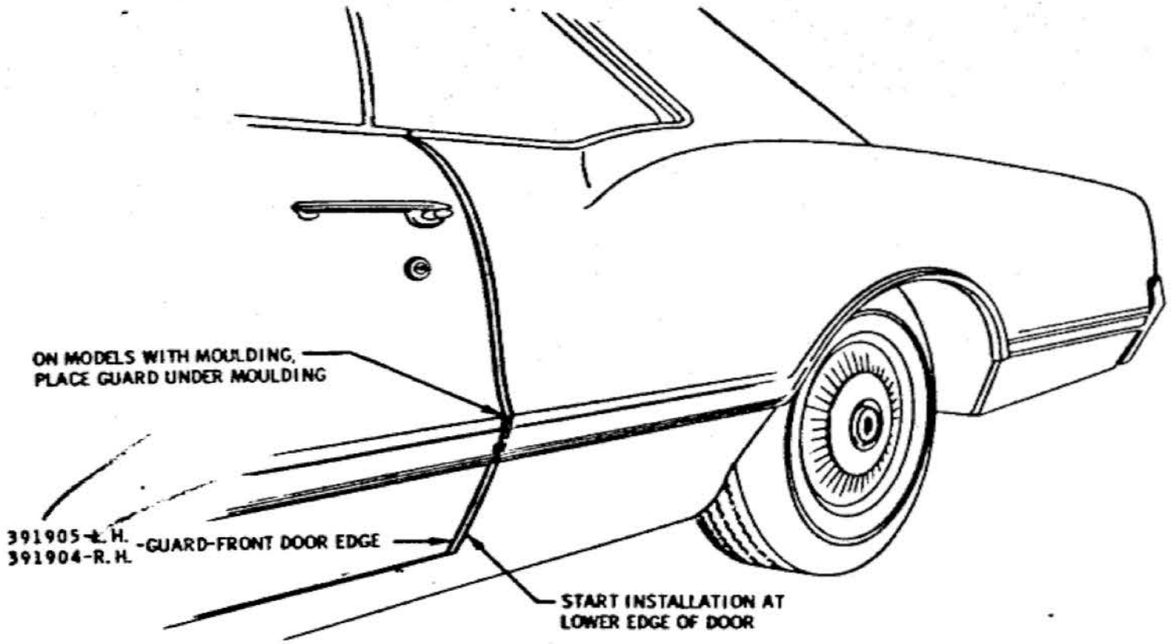

FOR ALL TWO DOOR MODELS

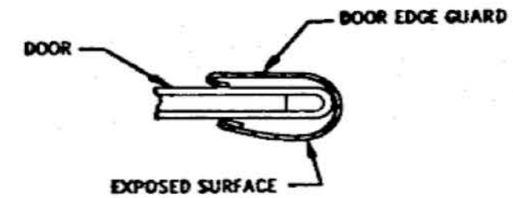

TYPICAL SECTION THRU REAR EDGE OF DOOR AND DOOR GUARD

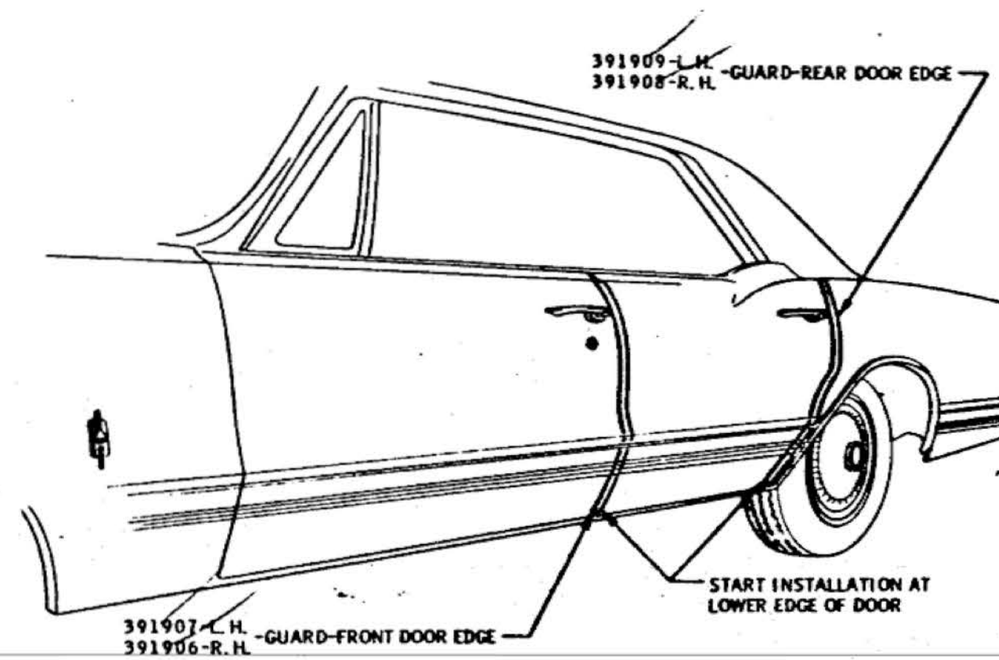

FOR ALL FOUR DOOR MODELS

GENERAL INSTRUCTIONS

PLACE GUARD IN POSITION ON REAR EDGE OF DOOR AS SHOWN AND TAP OVER EDGE USING RUBBER MALLET OR BLOCK OF WOOD, UNTIL GUARD IS FIRMLY SEATED ON DOOR EDGE. LOCAL CRIMP PERMISSIBLE TO SECURE TIGHT FIT.

DOOR EDGE GUARDS

DATE	SYM	REVISION	DR.	CK.	DATE	SYM	REVISION	DR.	CK.	DATE	SYM	REVISION	DR.	CK.

INSTALLATION SHEET METAL

DATE FEB. 25, 1965
DR. BY C.V. BEACHNAU
CHECKED H. VAN PELT
APPR.
APPR.

FIRST USED 1966 — Oldsmobile Graphic Illustration — PAGE 11-3.1

SERIES A — REF. 35893 — PART NO. 589998

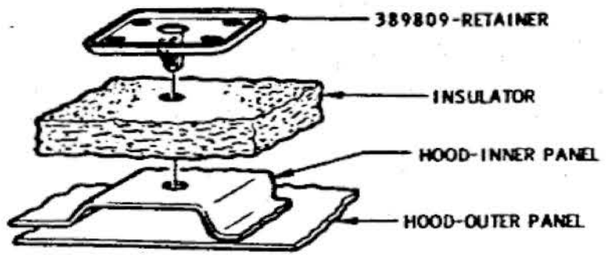

FIGURE 1

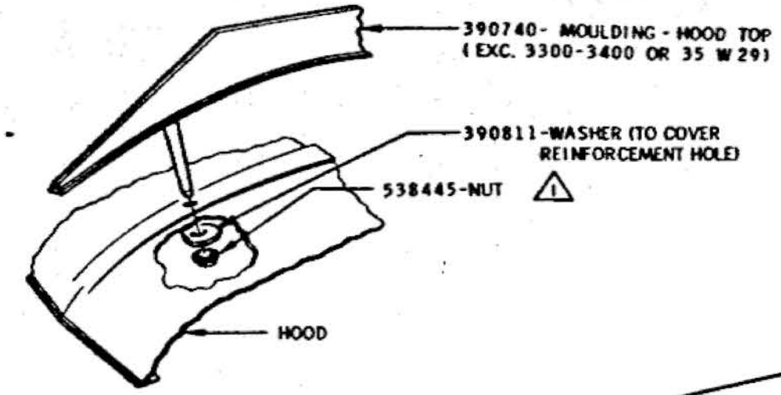

FIGURE 2

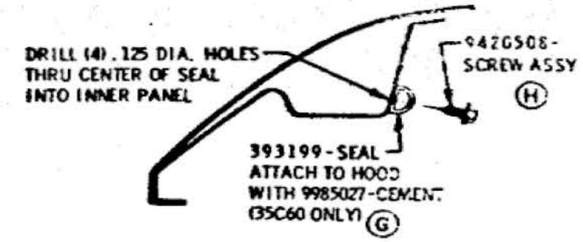

FIGURE 5

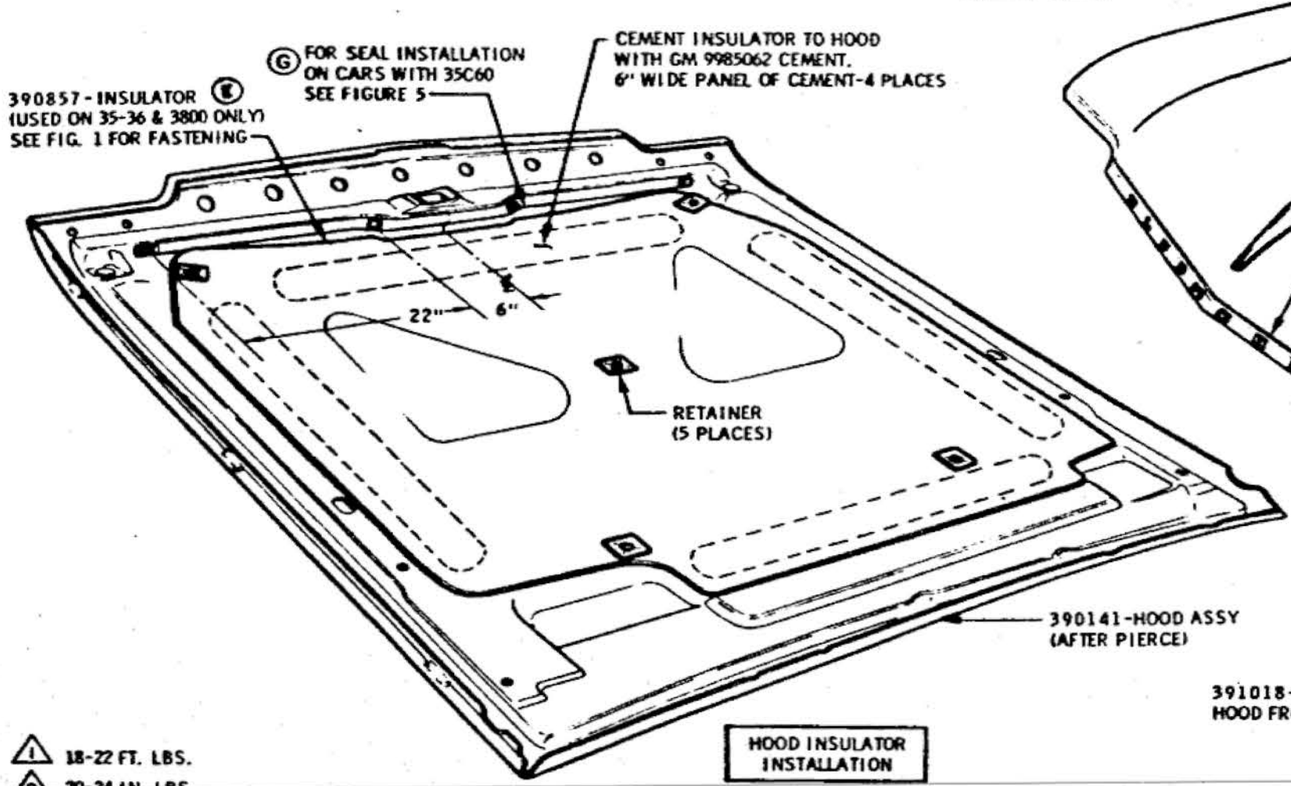

HOOD INSULATOR INSTALLATION

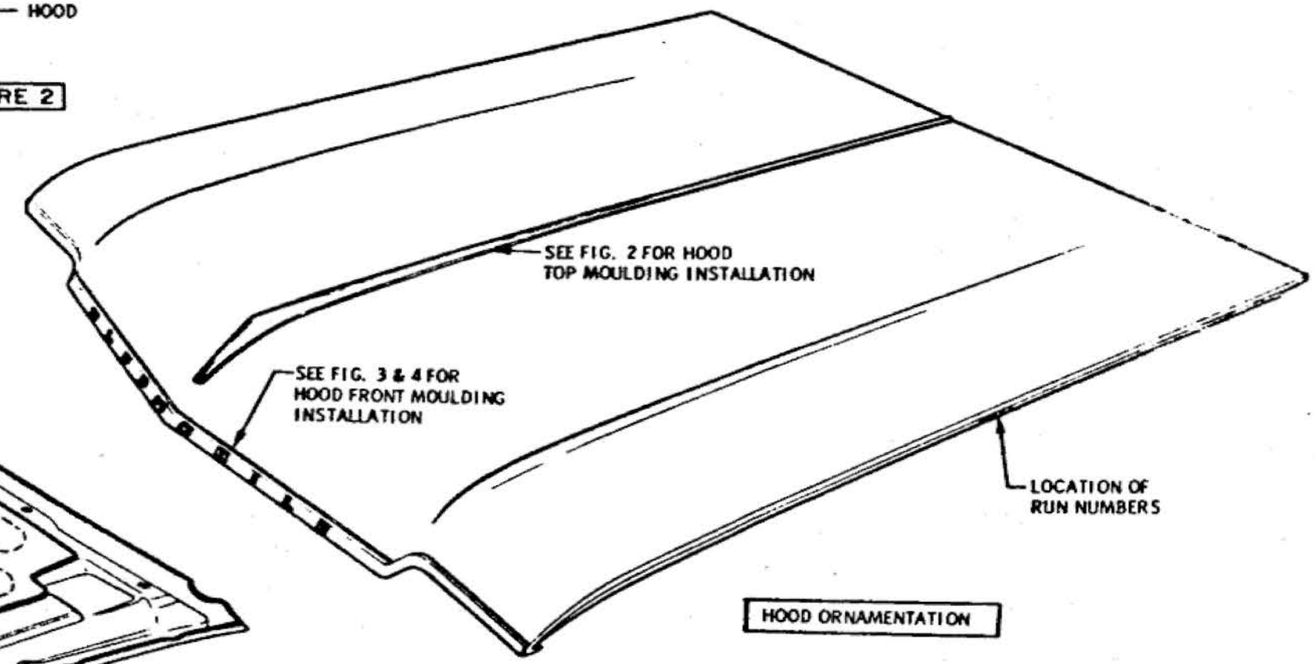

HOOD ORNAMENTATION

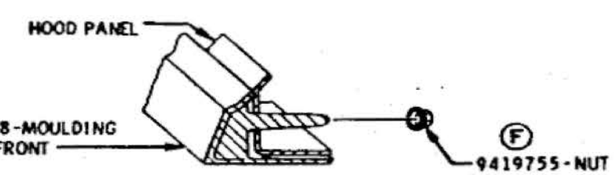

FIGURE 3

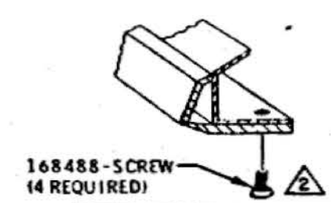

FIGURE 4

1 18-22 FT. LBS.
2 20-24 IN. LBS.

HOOD ASSY COMPLETE

DATE	SYM	REVISION	DR.	CK.	DATE	SYM	REVISION	DR.	CK.	DATE	SYM	REVISION	DR.	CK.
										5-19-65	E	USAGE ADDED	GR	VP
										5-10-65	D	VIEW ADDED	GR	VP
					10-5-65	H	PART NO. ADDED	GR	DT	4-29-65	C	WAS 168641 SCR. & 9419840 NUT	GR	VP
					9-20-65	G	NOTES ADDED	CM	DT	4-22-65	B	NOTES REMOVED	CB	VP
					9-10-65	F	WAS 538445 NUT	CM	DT	4-6-65	A	SEALER NOTE ADDED	GR	VP

INSTALLATION SHEET METAL

DATE FEB. 19, 1965
DR. BY C.V. BEACHAM
CHECKED H. VAN PELT
APPR.
APPR.

FIRST USED 1966
SERIES A
Oldsmobile Graphic Illustration
REF. 11D&G
PAGE 11-5.1
PART NO. 589998

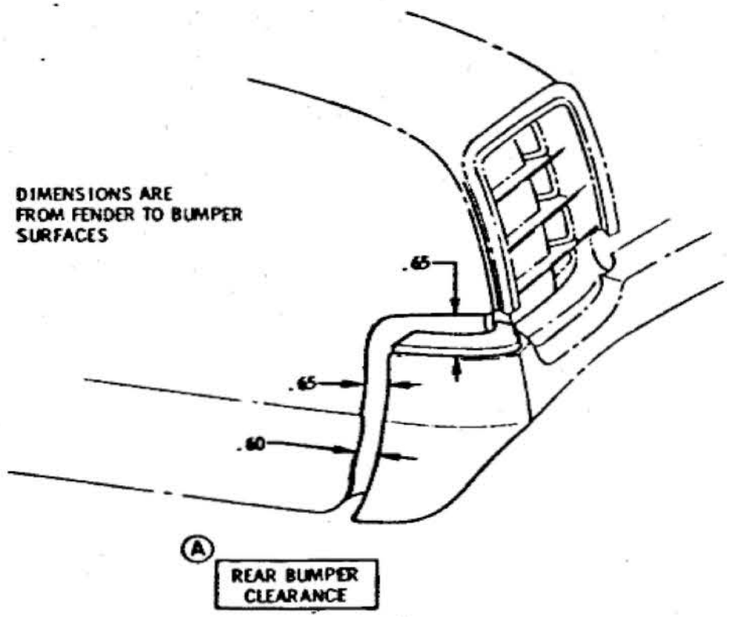

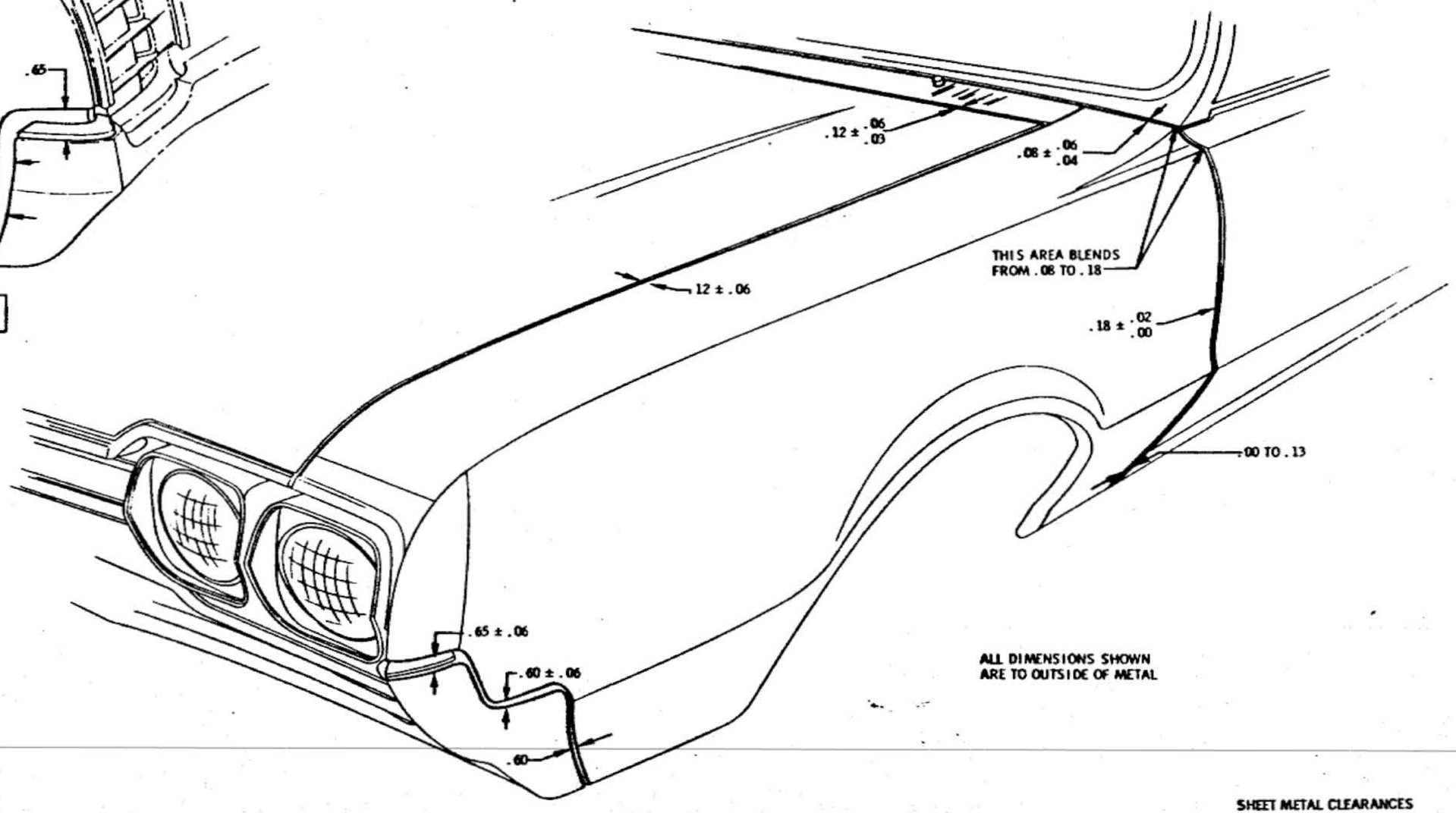

ALL DIMENSIONS SHOWN
ARE TO OUTSIDE OF METAL

SHEET METAL CLEARANCES

DATE	SYM	REVISION	DR.	CK.	DATE	SYM	REVISION	DR.	CK.	DATE	SYM	REVISION	DR.	CK.
										5-14-65	A	REAR BUMPER CLEARANCE ADDED NEW P		

INSTALLATION	SHEET METAL		
DATE MAR. 25, 1965	FIRST USED 1966	Oldsmobile Graphic Illustration	PAGE 11-4.1
DR. BY C.H. BEACHNAU			
CHECKED H. VAN PELT			
APPR.	SERIES A	REF.	PART NO. 589998
APPR.			

OLDSMOBILE PRODUCT INFORMATION MANUAL

12-ELECTRICAL

GROUP 12 – ELECTRICAL

391554 CHART-FUSE PANEL ---------- 12-1.2
391420 CHART-HEADLAMP FOCUS (SHEET 1) ---------- 12-1.3
391420 CHART-HEADLAMP FOCUS (SHEET 2) ---------- 12-1.4

FILLER PLATE, DASH PANEL AND JUNCTION BLOCK WIRING (V8 ONLY) ---------- 12-2.1
BATTERY HOLD DOWN, CABLES & GROUND STRAPS ---------- 12-2.2
2 SPEED WIPER WASHER MOTOR WIRING (3800) ---------- 12-2.3
HEADLAMP AND TURN SIGNAL WIRING ---------- 12-2.4
ENGINE COIL AND PLUG WIRING. FRONT GROUND STRAP ---------- 12-2.5
V8 OIL PRESSURE, WATER TEMPERATURE SWITCHES & GENERATOR WIRING ---------- 12-2.6
PARKING BRAKE LAMP ---------- 12-2.7
WIPER, FLASHER AND CONTROL PANEL WIRING ---------- 12-2.8
STOP LIGHT, NEUTRAL SAFETY AND TURN SIGNAL SWITCHES ---------- 12-2.9
FUEL TANK WIRING (ALL STATION WAGONS) ---------- 12-2.10
FUEL TANK WIRING (EXC. STATION WAGONS) ---------- 12-2.11
LICENSE LAMP WIRING ---------- 12-2.12
STARTER CABLE TUBES ---------- 12-2.13
L6 FILLER PLATE, DASH PANEL & CIRCUIT BREAKER ---------- 12-2.14
L6 BATTERY CABLES & ENGINE WIRING HARNESS ---------- 12-2.15

L6 ENGINE WIRING ON L. H. SIDE---------- 12-2. 16
V8 A/C WIRE ROUTING (ENGINE COMPARTMENT)---------- 12-2. 17
L6 A/C COMPRESSOR WIRE ROUTING---------- 12-2. 18
12-2. 19
TACHOMETER WIRE ROUTING---------- 12-2. 20
BACK-UP LAMP WIRE ROUTING FOR REAR OF CAR (EXCEPT S. W.)---------- 12-2. 21
BACK-UP LAMP WIRE ROUTING FOR REAR OF CAR (STATION WAGONS)---------- 12-2. 22
BACK-UP LAMP WIRING FOR 3 SPEED COL. AND 3 & 4 SPEED FLOOR SHIFT---------- 12-2. 23
S. M. FLOOR SHIFT BACK-UP LAMP SWITCH WIRE ROUTING---------- 12-2. 24
12-2. 25
TRUNK LAMP (EXCEPT STATION WAGONS)---------- 12-2. 26
COURTESY LAMPS---------- 12-2. 27
GLOVE BOX LAMP WIRE ROUTING---------- 12-2. 28
ELECTRIC ANTENNA & S. W. ELECTRIC REAR WINDOW CABLE ROUTING---------- 12-2. 29
POWER TOP & REAR SEAT SPEAKER CABLE ROUTING---------- 12-2. 30
CONSOLE-WIRING & HOSE ROUTING (SM & FS) UNDER INSTR. PANEL---------- 12-2. 31
CONSOLE-WIRING & HOSE ROUTING (JETAWAY) UNDER INSTR. PANEL---------- 12-2. 32
35K30 WIRING (INSIDE CAR)---------- 12-2. 33

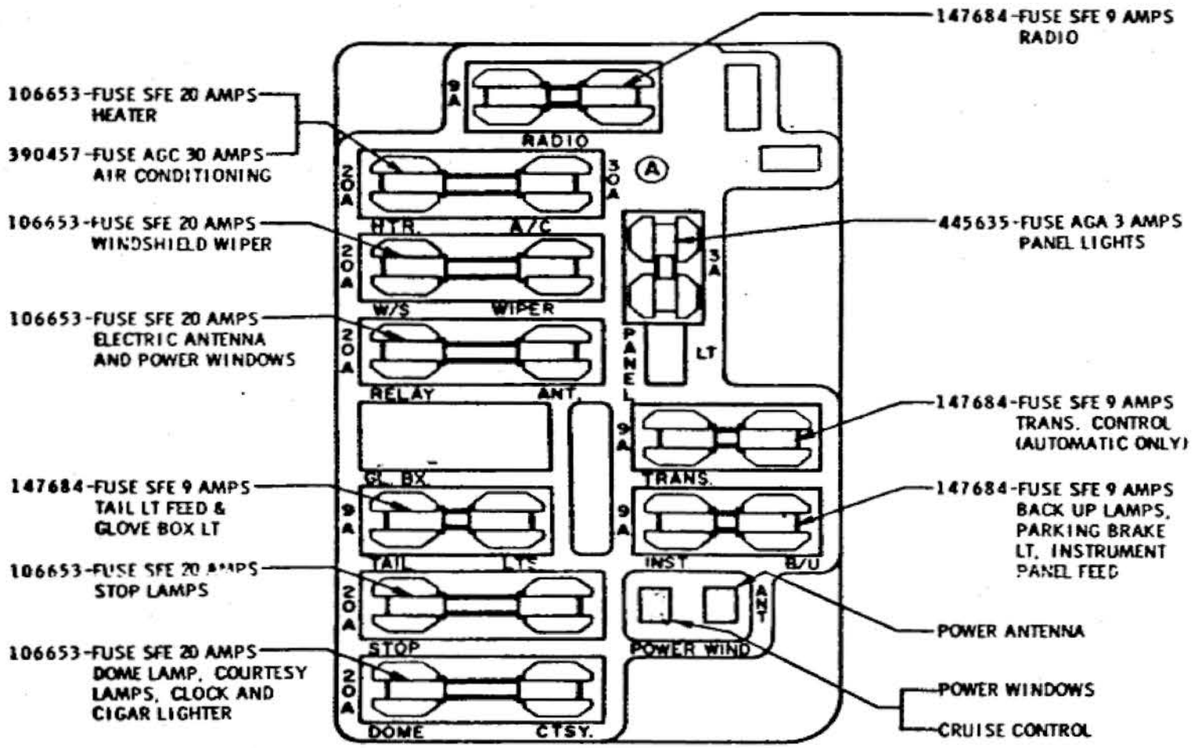

FUSE PANEL

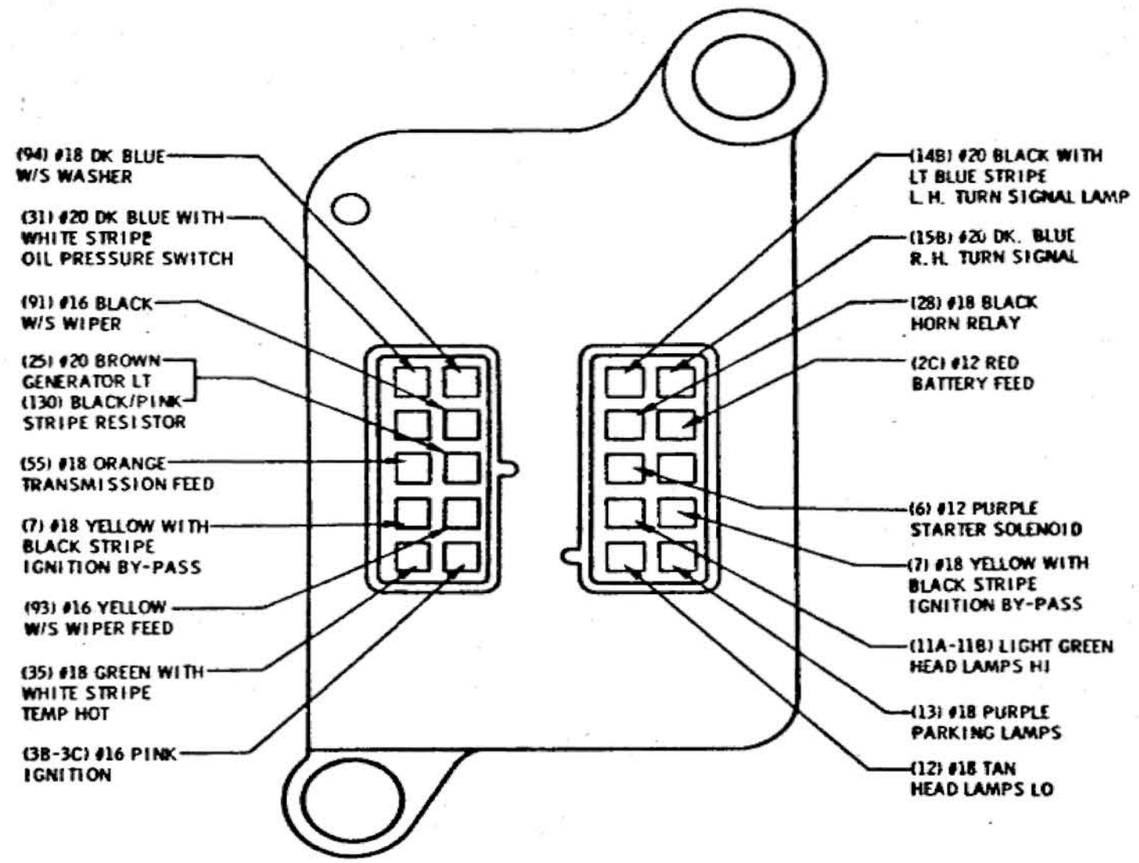

DASH DISCONNECT

DATE	SYM	REVISION	DR	CK	DATE	SYM	REVISION	DR.	CK.	DATE	SYM	REVISION	DR.	CK.
										1-13-66	A	MAS 25 AMPS	JG	JF

CHART FUSE PANEL

DATE DEC. 15, 1964
DR. BY R. R. STANLAKE
CHECKED J. N. AMES
APPR. S. F. [illegible]
APPR.

FIRST USED 1966
Oldsmobile Service ILLUSTRATION
SERIES A
REF.
PAGE 12-1.2
PART NO. 391554

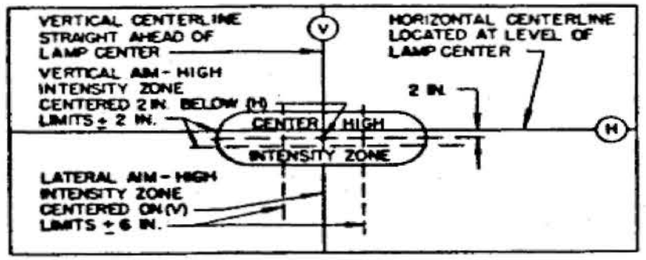

INSPECTION LIMITS FOR UPPER BEAM

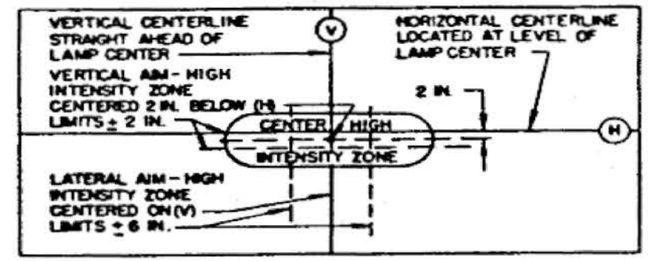

INSPECTION LIMITS FOR UPPER BEAM

HEADLAMP AIMING

THE AIMING INSTRUCTIONS APPLY WITH A 25 FT. DISTANCE BETWEEN THE VEHICLE HEADLIGHTS AND THE AIMING SURFACE
CAR MUST BE POSITIONED ON LEVEL SURFACE WITH GAS TANK EMPTY (0 TO 4 GALLONS)

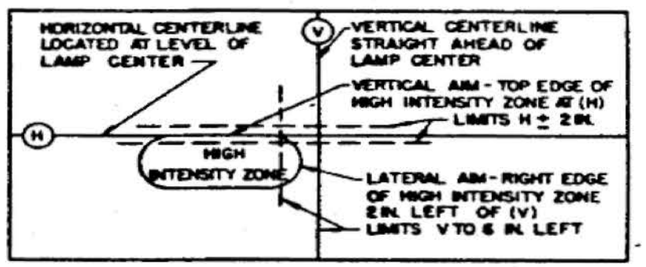

INSPECTION LIMITS FOR LOWER BEAM

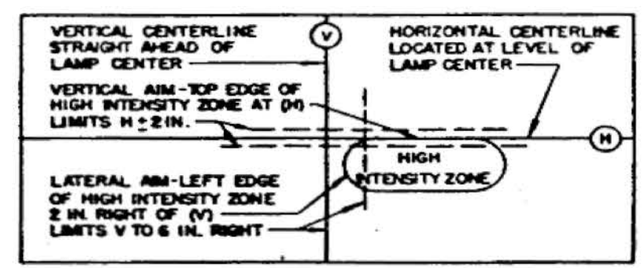

INSPECTION LIMITS FOR LOWER BEAM

EXPORT
FOR LEFT RULE OF ROAD

SHEET 1 OF 2

DATE	SYM	REVISION	DR.	CK.	DATE	SYM	REVISION	DR.	CK.	DATE	SYM	REVISION	DR.	CK.
										7-9-65	C	REVISED AND REDRAWN	JJ	JR
										6-9-65	B	VIEW REMOVED	CG	JLG
										6-9-65	A	NOTE REVISED	CG	JLG

CHART – HEADLAMP FOCUS

DATE DEC. 3, 1964
DR. BY J. D. SMITH
CHECKED J. N. AINES
APPR.

FIRST USED 1966
Oldsmobile GRAPHIC ILLUSTRATION
SERIES A-B-C-E
REF.
PAGE 12-1.3
PART NO. 391420

HEADLAMP AIMING

EXPORT
FOR LEFT RULE OF ROAD

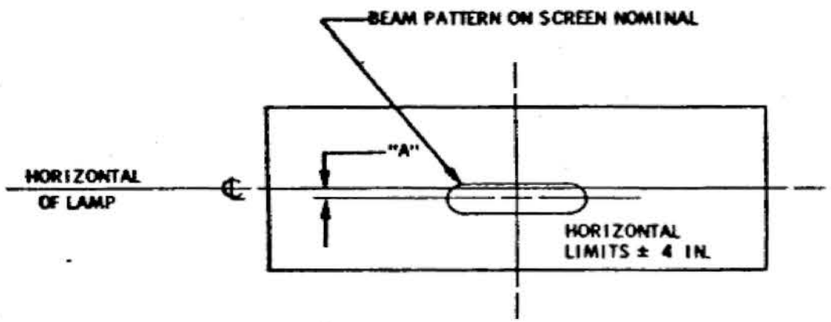

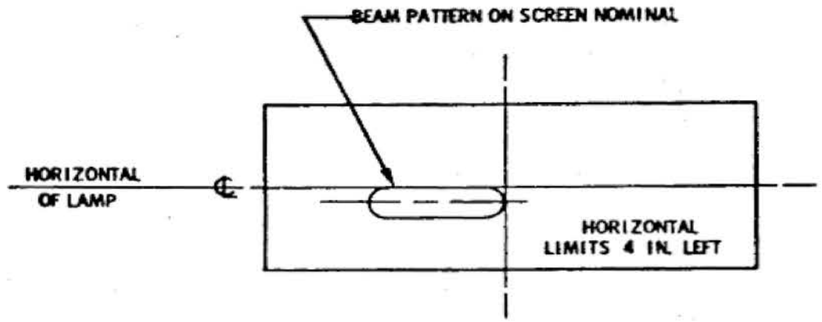

DIMENSION "A" — GAS TANK EMPTY - 1.00 TO 3.00 BELOW HORIZ. ℄
GAS TANK FULL - ON HORIZ. ℄ TO 2.00 BELOW

FOR SINGLE BEAM
SINGLE FILAMENT UNIT
TYPE I

GAS TANK EMPTY - TOP OF HOT SPOT 1.00 BELOW HORIZONTAL ℄ TO 1.00 ABOVE.

GAS TANK FULL - TOP OF HOT SPOT AT HORIZONTAL ℄ TO 2.00 ABOVE.

FOR LOWER BEAM
TWO FILAMENT UNIT
TYPE II

CAR MUST BE POSITIONED
ON LEVEL SURFACE

THE ABOVE AIMING INSTRUCTIONS APPLY WITH A 25 FT. DISTANCE BETWEEN THE VEHICLE HEADLIGHTS AND THE AIMING SURFACE.

SHEET 2

DATE	SYM	REVISION	DR.	CK.	DATE	SYM	REVISION	DR.	CK.	DATE	SYM	REVISION	DR.	CK.

CHART — HEADLAMP FOCUS (EXPORT)

DATE DEC. 4, 1964
DR. BY J.D. SMITH
CHECKED J.M. RAGES
APPR.
APPR.

FIRST USED 1966
Oldsmobile Service ILLUSTRATION
SERIES A-BC-E
REF.
PAGE 12-1.4
PART NO. 391420

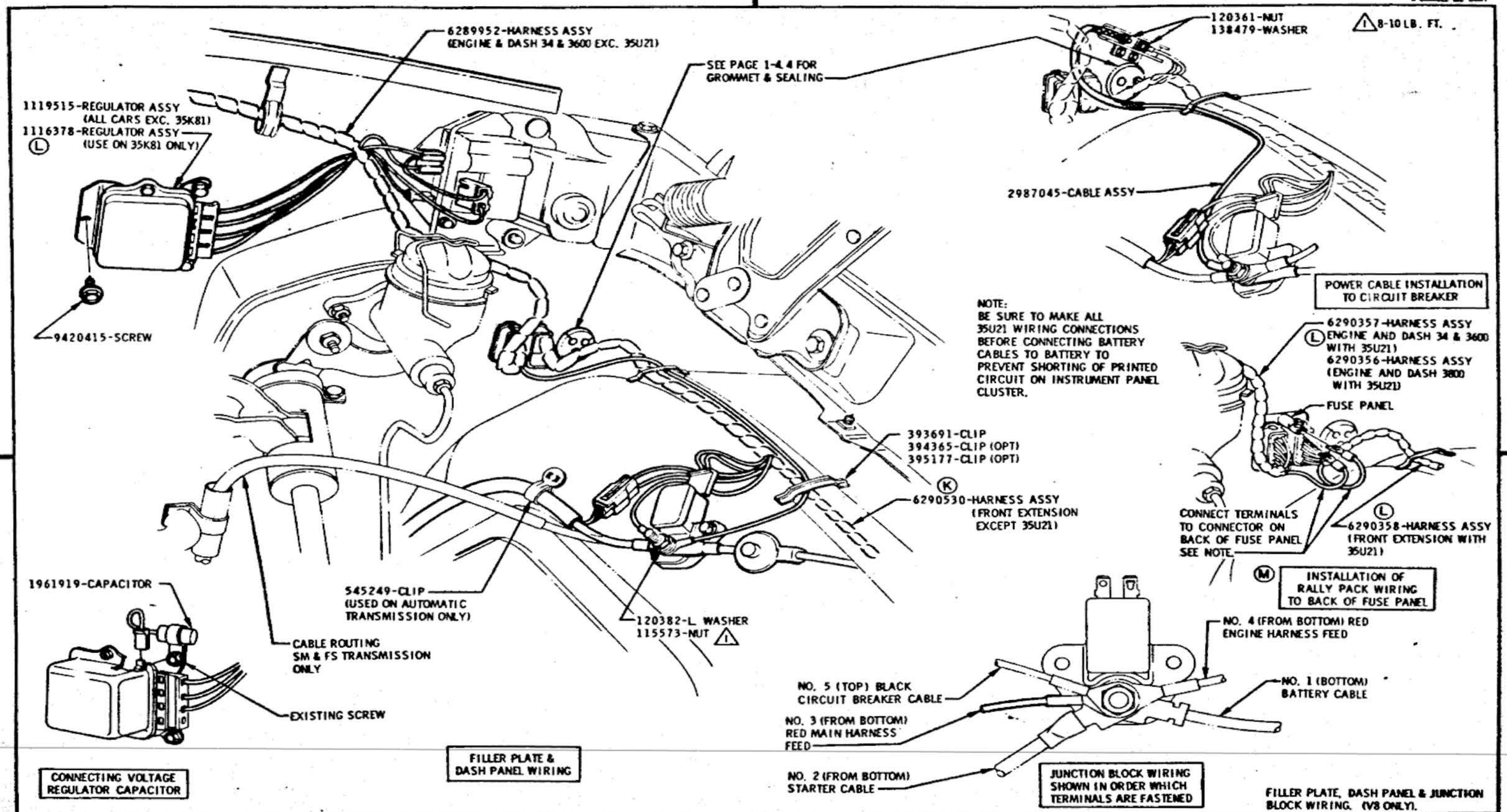

FILLER PLATE, DASH PANEL & JUNCTION BLOCK WIRING. (V8 ONLY).

DATE	SYM	REVISION	DR.	CK.	DATE	SYM	REVISION	DR.	CK.	DATE	SYM	REVISION	DR.	CK.
					1-5-66	N	WAS 6286733	PM	DT	7-19-65	E	WAS 2987081 HARNESS	JA	VP
					11-29-65	J	OPTION ADDED	[illegible]	DT	7-1-65	D	WAS 581361-CLIP	[illegible]	DT
					10-26-65	H	NOTE REVISED	CB	DT	5-20-65	C2	PART NO. REMOVED	[illegible]	VP
6-10-66	M	VIEW ADDED	CM	DT	10-12-65	G2	NOTES ADDED	PM	DT	5-15-65	B	WAS 1960757 CAPACITOR	[illegible]	F.J
4-29-66	L2	PART NO ADDED	[illegible]	DT	8-10-65	F	NOTE ADDED	CM	VP	5-12-65	A	VIEW ADDED	CB	VP

INSTALLATION **ELECTRICAL**

DATE APRIL 6, 1965
DR. BY CURT MAY
CHECKED H. VAN DELT
APPR. D. S. [illegible]
APPR.

FIRST USED 1966 — Oldsmobile Service ILLUSTRATION

SERIES A — REF. 12H

PAGE 12-2.1

PART NO. 589998

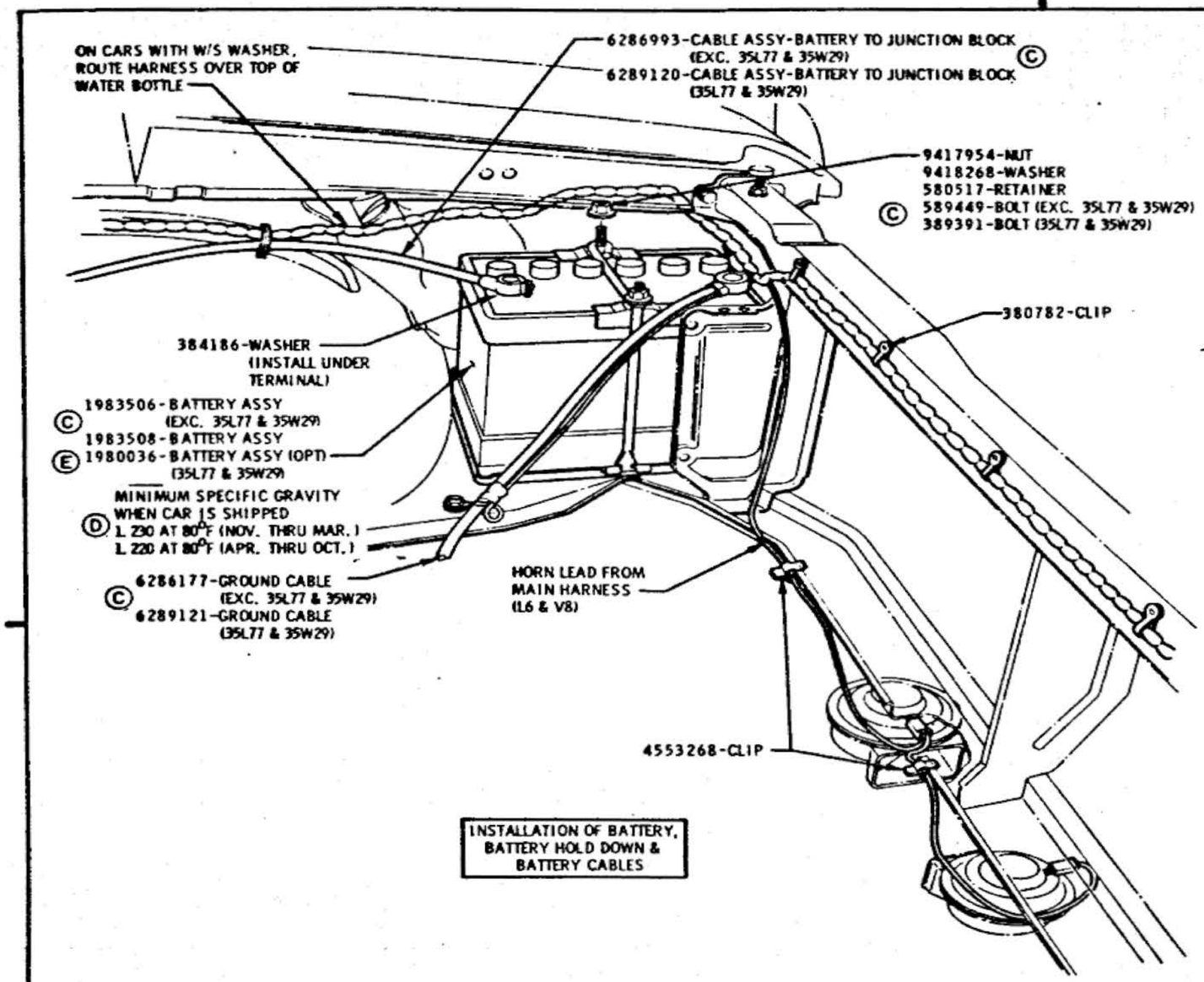

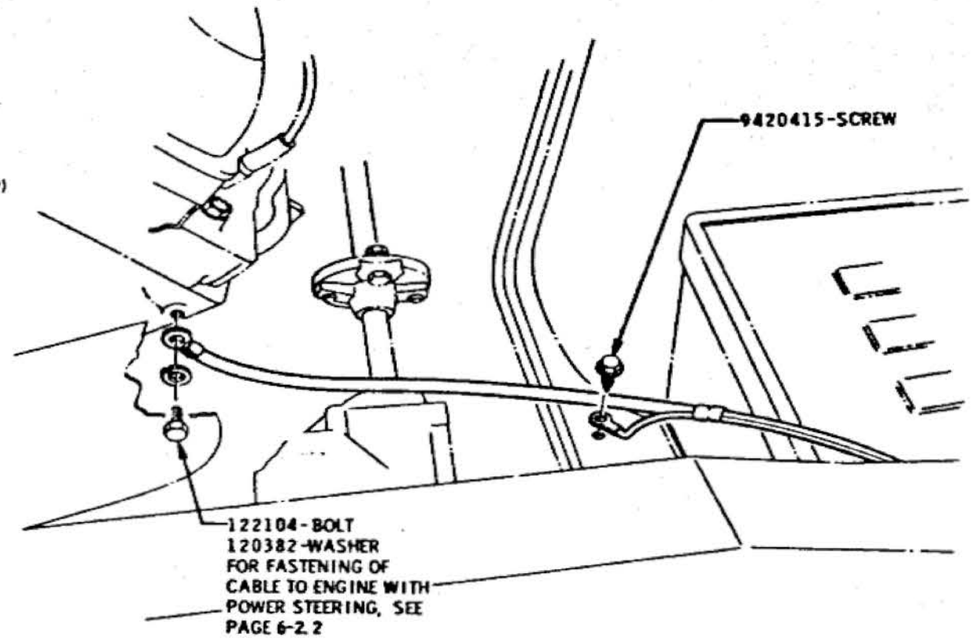

BATTERY HOLD-DOWN, CABLES & GROUND STRAPS.

DATE	SYM	REVISION	DR.	CK.	DATE	SYM	REVISION	DR.	CK.	DATE	SYM	REVISION	DR.	CK.
										4-13-66	E	PART NO. ADDED		DT
										12-17-65	D	BATTERY NOTE ADDED	DM	
										12-17-65	C	PART NO'S ADDED		DT
										7-28-65	B	REDRAWN		
										5-27-65	A	CABLE FASTENING NOTE ADDED	CG	VP

INSTALLATION ELECTRICAL

DATE APRIL 13, 1965
DR. BY CURT MAY
CHECKED H. VAN PELT
APPR. D. SIVERNICH

FIRST USED 1966

Oldsmobile GRAPHIC ILLUSTRATION

SERIES A

REF. 12A-B-

PAGE 12-2.2

PART NO. 589998

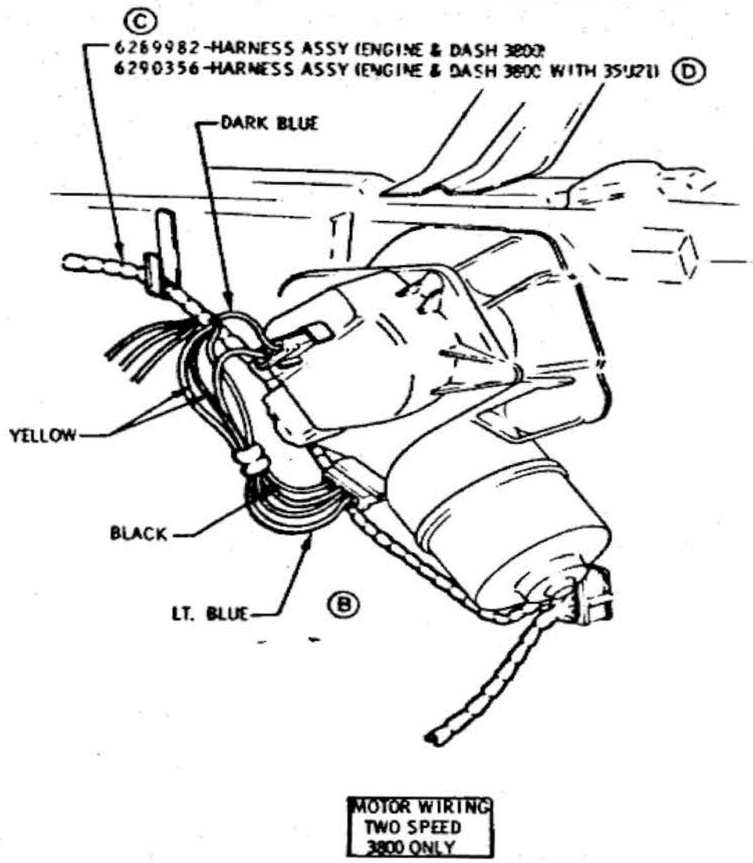

2 SPEED WIPER WASHER MOTOR WIRING.

DATE	SYM	REVISION	DR.	CK.	DATE	SYM	REVISION	DR.	CK.	DATE	SYM	REVISION	DR.	CK.
										2-28-66	D	PART NO. ADDED	KL	DT
										8-10-65	C	WAS 6289952-HARNESS	CM	VP
										7-21-65	B	WIRING REVISED	CM	VP
										5-6-65	A	WIRE ROUTING REVISED	CM	VP

INSTALLATION ELECTRICAL

DATE APRIL 2, 1965
DR. BY CURT MAY
CHECKED H. VAN PELT
APPR. J. SPVELANCE
APPR.

FIRST USED 1966
Oldsmobile GRAPHIC ILLUSTRATION
SERIES A
REV. 35CM
PAGE 12-2.3
PART NO. 589998

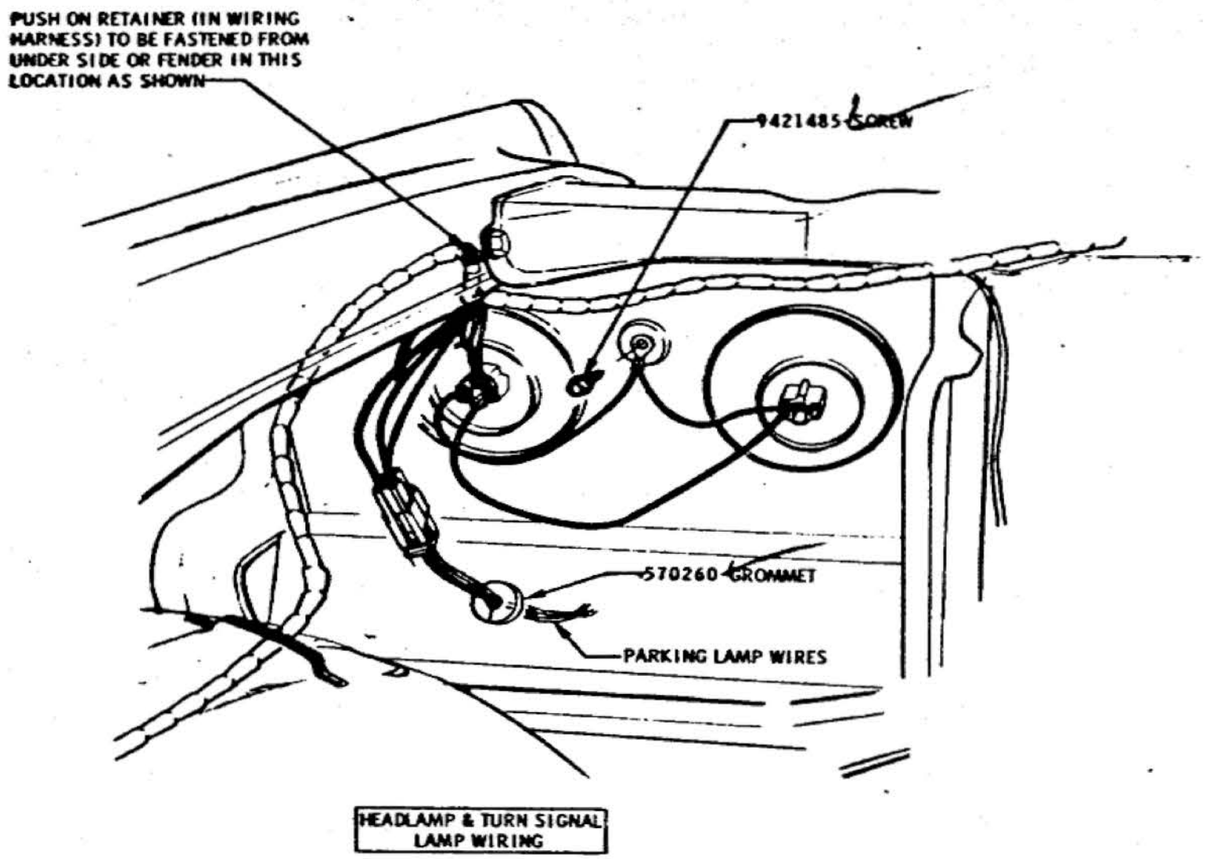

HEADLAMP & TURN SIGNAL WIRING.

DATE	SYM	REVISION	DR.	CK.	DATE	SYM	REVISION	DR.	CK.	DATE	SYM	REVISION	DR.	CK.

INSTALLATION	ELECTRICAL		
DATE APRIL 2, 1965	FIRST USED 1966	Oldsmobile Graphic Illustration	PAGE 12-2.4
DR. BY CURT MAY			
CHECKED H. VAN PELT	SERIES A	REF. VEC	PART NO. 589998
APPR. D. SEVERANCE			
APPR.			

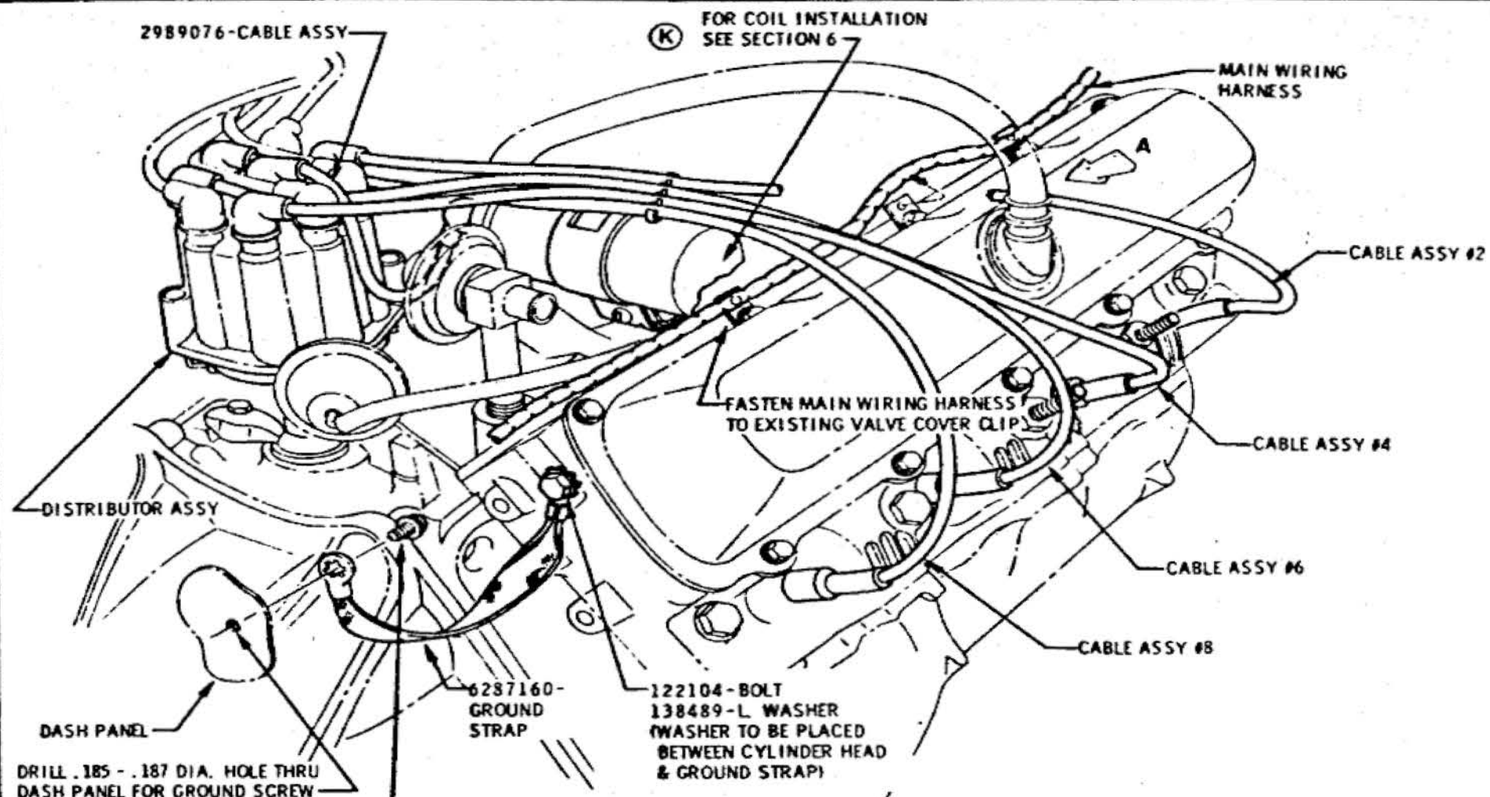

VIEW OF ENGINE R.H. SIDE

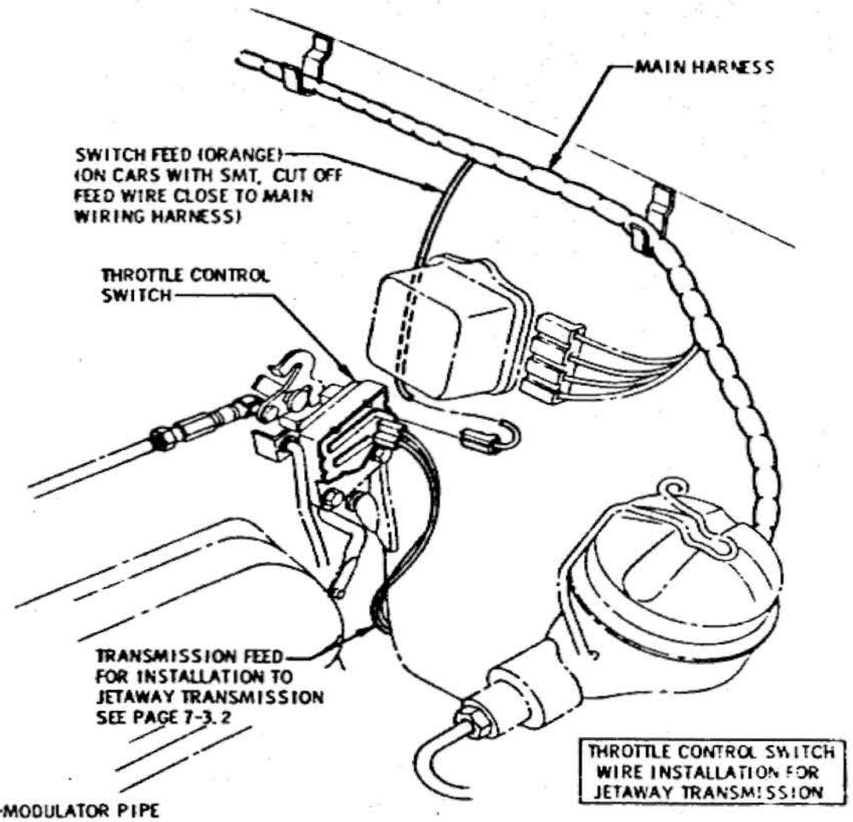

THROTTLE CONTROL SWITCH WIRE INSTALLATION FOR JETAWAY TRANSMISSION

(V-8 ONLY)

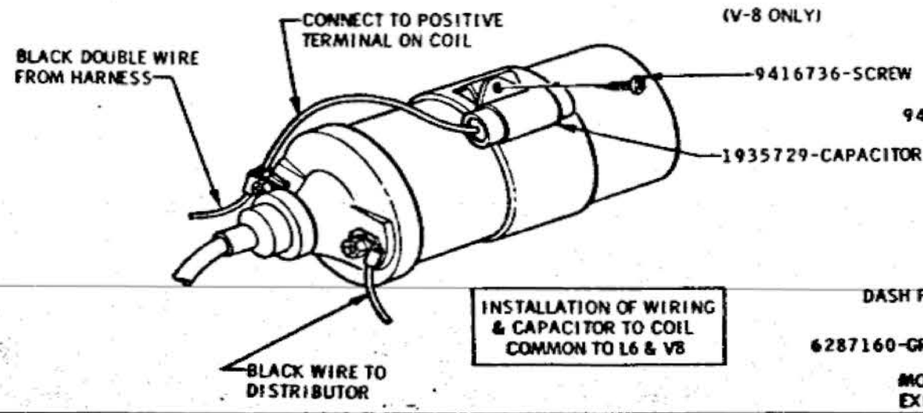

INSTALLATION OF WIRING & CAPACITOR TO COIL COMMON TO L6 & V8

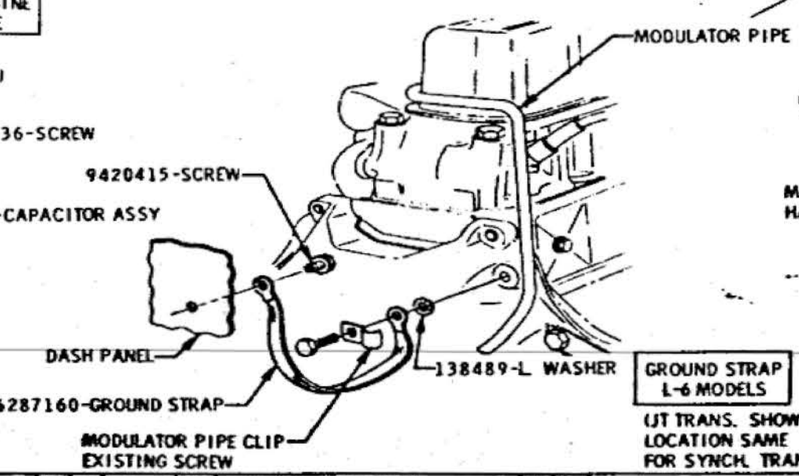

GROUND STRAP L-6 MODELS

(JT TRANS. SHOWN, LOCATION SAME FOR SYNCH. TRANS.)

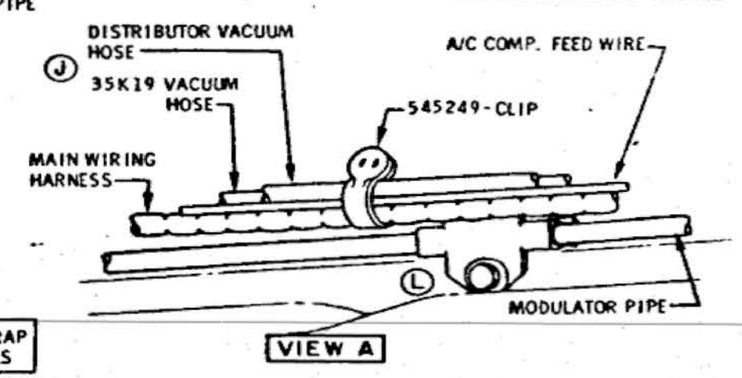

VIEW A

ENGINE COIL & PLUG WIRING, FRONT GROUND STRAP

DATE	SYM	REVISION	DR.	CK.	DATE	SYM	REVISION	DR.	CK.	DATE	SYM	REVISION	DR.	CK.
					12-1-65	K	NOTE REVISED			7-21-65	E	VIEW ADDED		
					7-30-65	J	NOTES REVISED			5-15-65	D	VIEW REDRAWN & REV.		
					7-30-65	H	TORQUE ADDED			5-15-65	C	VIEW ADDED		
					7-21-65	G	REDRAWN			4-28-65	B	NOTE ADDED		
12-20-65	L	CLIP REVERSED			7-21-65	F	VIEW REVISED			4-20-65	A	NOTE ADDED		

INSTALLATION ELECTRICAL

DATE APRIL 2, 1965

DR. BY CURT MAY

CHECKED H VAN PELT

APPR. D SAVERANCE

APPR.

FIRST USED 1966

Oldsmobile GRAPHIC ILLUSTRATION

SERIES A

REF. 65 KA

PAGE 12-2.5

PART NO. 589998

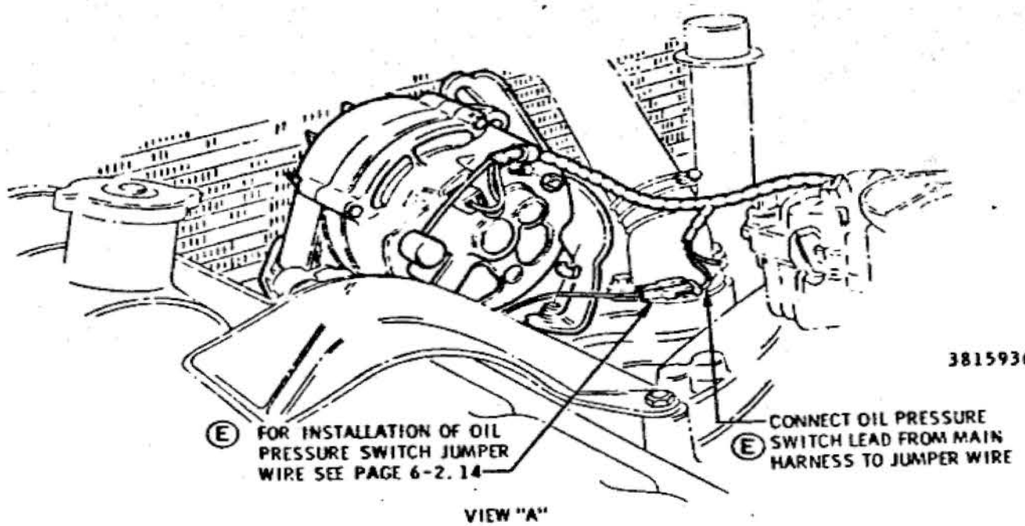

VIEW "A"

GENERATOR WIRE ROUTING (CARS WITH 35C60)

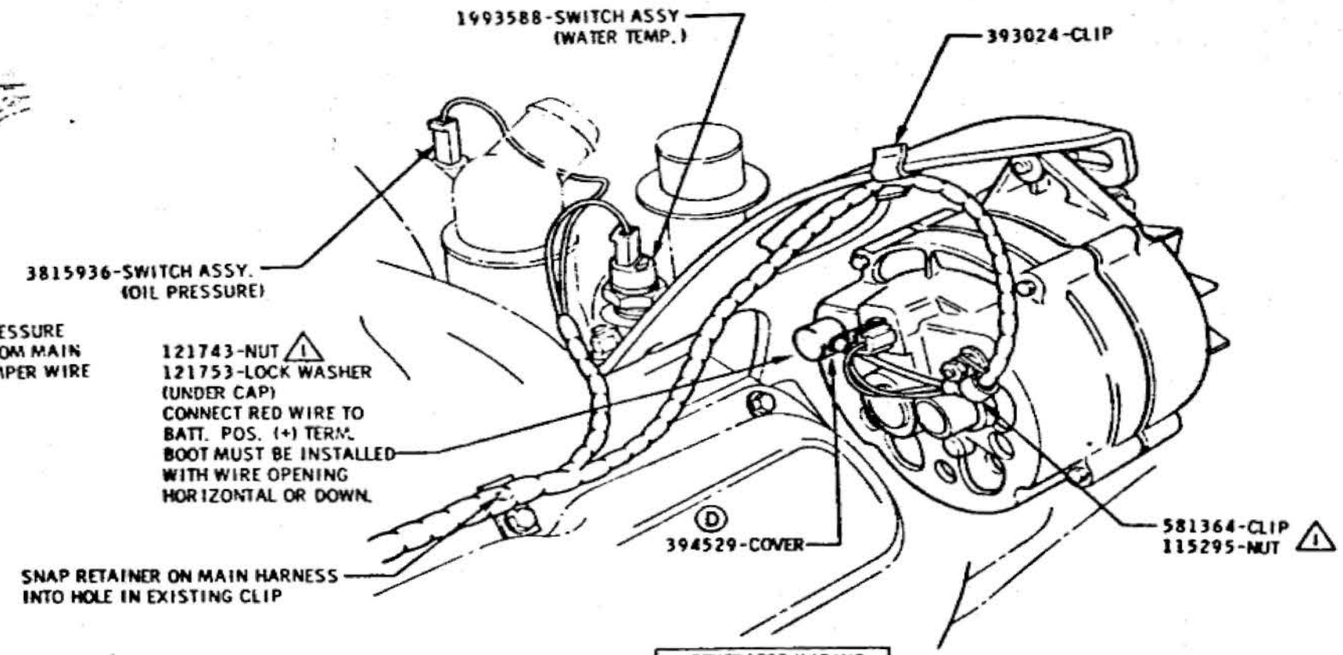

GENERATOR WIRING OIL PRESSURE & WATER TEMPERATURE SWITCH INSTALLATION

Ⓕ FOR WIRE ROUTING TO OIL PRESSURE AND WATER TEMPERATURE SWITCHES ON CARS WITH 35U21 OPTION, SEE PAGE 12-2.6A

△1 2-4 LB. FT.

V8-OIL PRESSURE, WATER TEMP. SWITCHES & GENERATOR WIRING

DATE	SYM	REVISION	DR.	CK.	DATE	SYM	REVISION	DR.	CK.	DATE	SYM	REVISION	DR.	CK.
										1-11-66	E	NOTES ADDED	CM	DT
										10-5-65	D	394529 - COVER ADDED	CM	DT
										9-14-65	C	VIEWS REVISED		DT
										7-30-65	B	VIEW ADDED		VP
					2-28-66	F	NOTE ADDED		DT	7-15-65	A	WAS 370204 - CLIP		VP

INSTALLATION — ELECTRICAL

DATE APRIL 2, 1965
DR. BY CURT MAY
CHECKED H. VAN PELT
APPR. I. SAVARENCO
APPR.

FIRST USED 1966 — Oldsmobile Classic ILLUSTRATION

SERIES A — REF. 12H-J

PAGE 12-2.6

PART NO. 589998

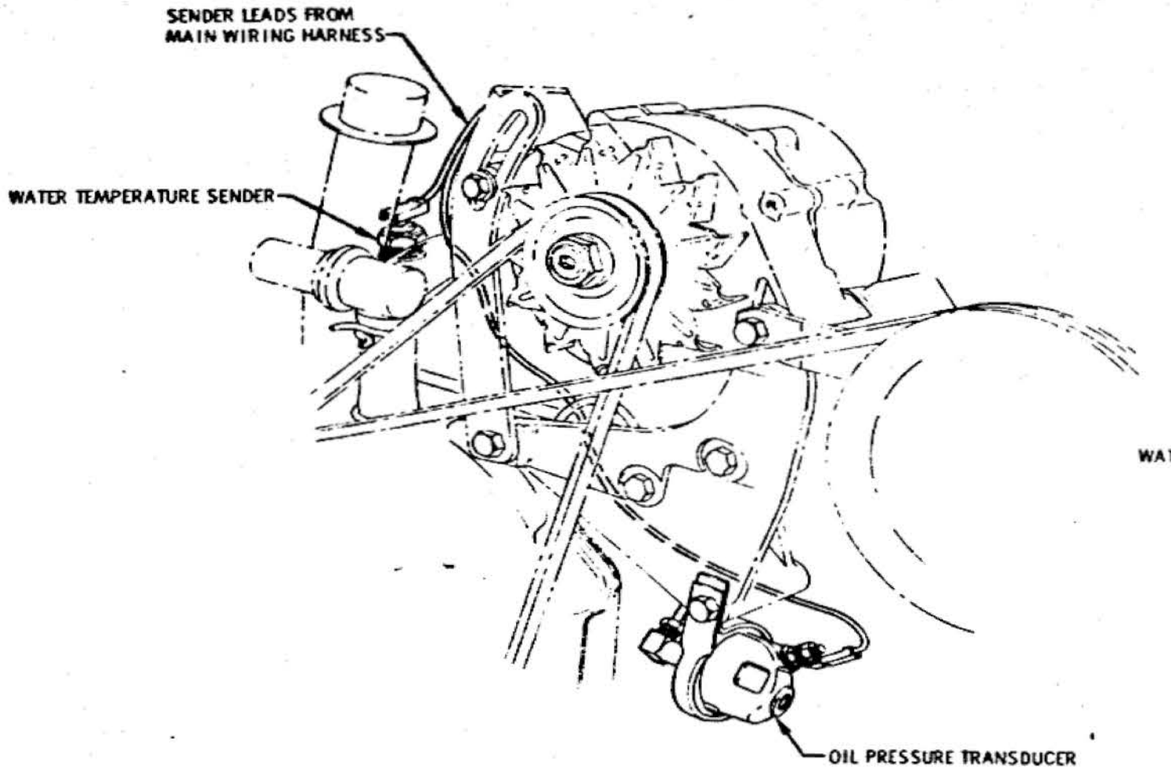

WIRE ROUTING TO OIL PRESSURE AND WATER TEMPERATURE SENDER 35U21 WITH K19 AND/OR 35C60

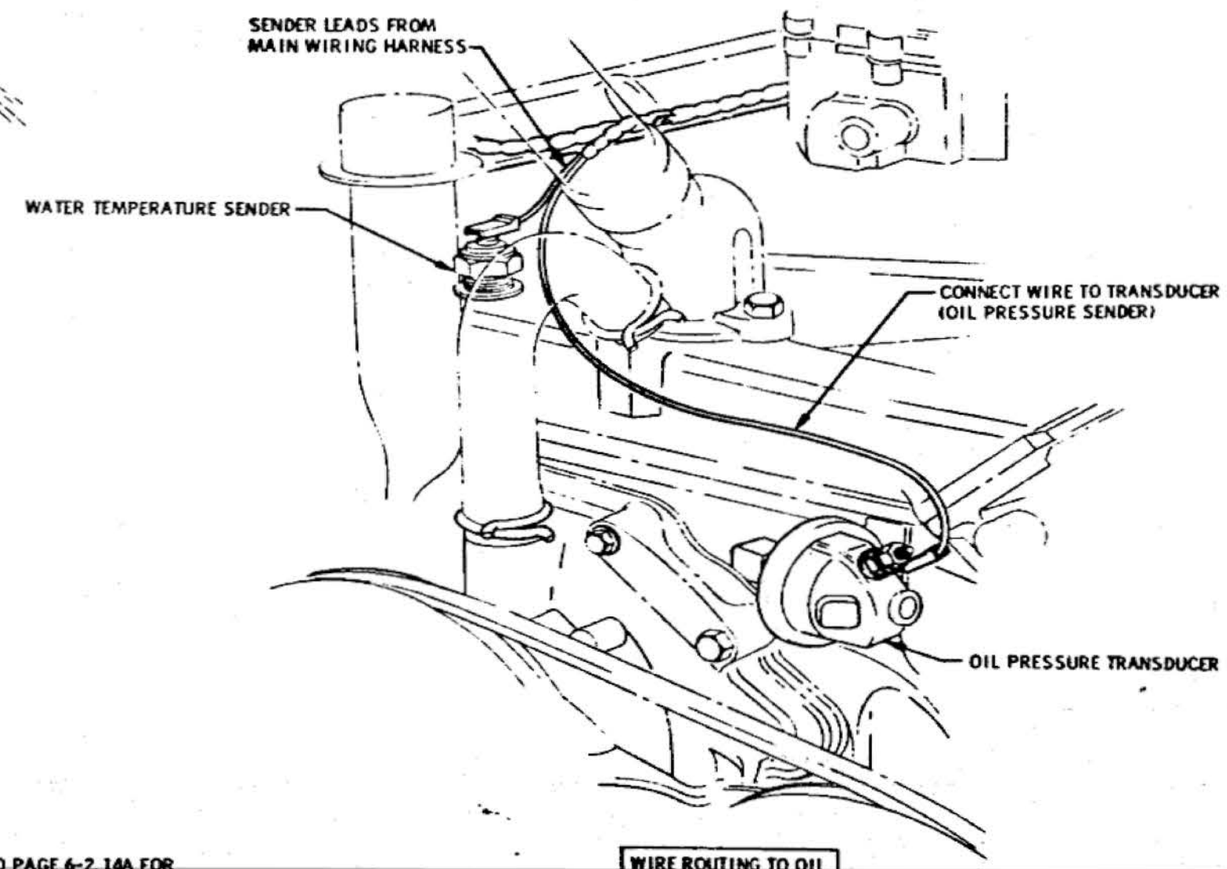

REFER TO PAGE 6-2.14A FOR INSTALLING WATER TEMPERATURE SENDER AND TRANSDUCER.

WIRE ROUTING TO OIL PRESSURE AND WATER TEMPERATURE SENDER STD. V8 - 35U21

DATE	SYM	REVISION	DR.	CK.	DATE	SYM	REVISION	DR.	CK.	DATE	SYM	REVISION	DR.	CK.

INSTALLATION — ELECTRICAL

DATE MAR. 1, 1966
DR. BY P.J. McKESSY
CHECKED
APPR.
APPR.

FIRST USED 1966 — Oldsmobile GRAPHIC ILLUSTRATION

SERIES A — REF.

PAGE 12-2.6A

PART NO. 589998

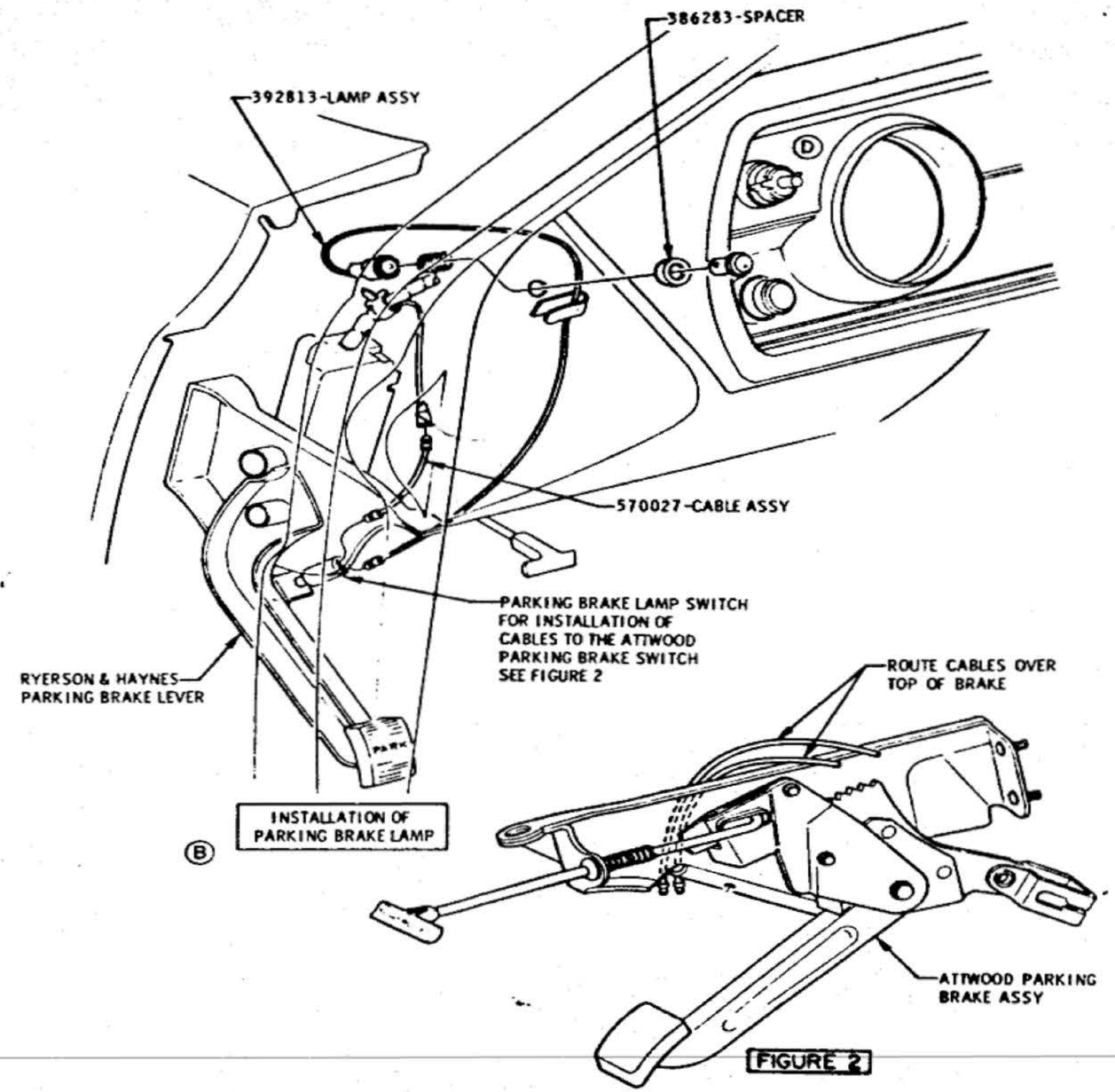

PARKING BRAKE LAMP

DATE	SYM	REVISION	DR.	CK.	DATE	SYM	REVISION	DR.	CK.	DATE	SYM	REVISION	DR.	CK.
										9-8-065	D	GALE GROUND REVD.		
										9-18-65	C	VIEWS REMOVED		
										5-20-65	B	VIEWS ADDED		
										5-6-65	A	PART NO. REMOVED		

INSTALLATION **ELECTRICAL**

DATE APRIL 6.1965
DR. BY CURT MAY
CHECKED H. VAN PELT
APPR. D SAVERANCE
APPR.

FIRST USED 1966 — Oldsmobile Graphic Illustration

SERIES A — REF. 12A — PAGE 12-2.7 — PART NO. 589998

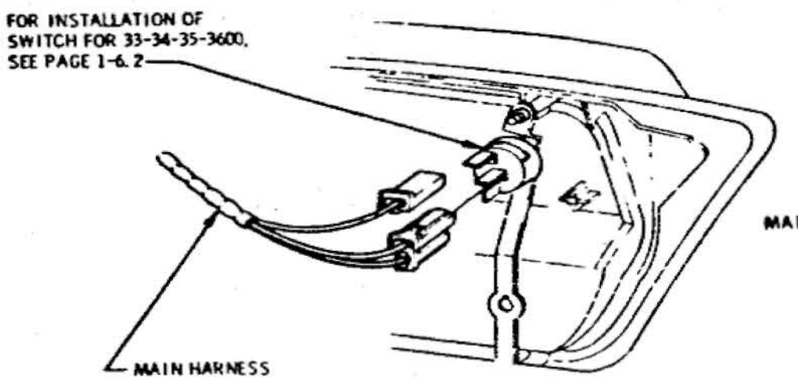

INSTALLATION OF WINDSHIELD WIPER & WASHER WIRING TO SWITCH ON 33-34-35 & 3600 MODELS

FIGURE 2 (F)

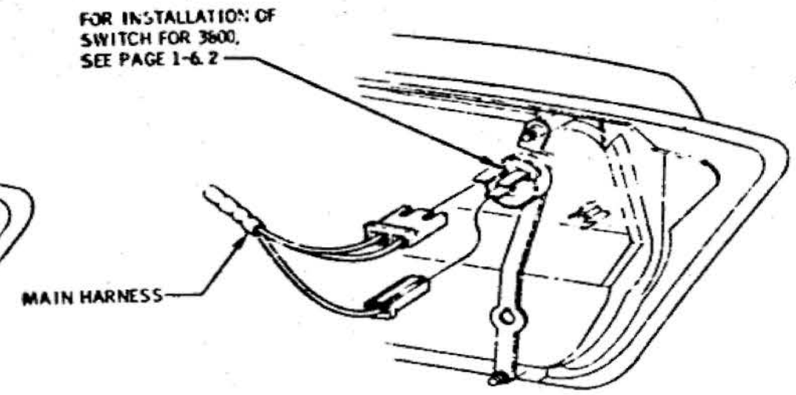

INSTALLATION OF WINDSHIELD WIPER & WASHER WIRING TO SWITCH ON 3800 MODELS ONLY

(F) FIGURE 3

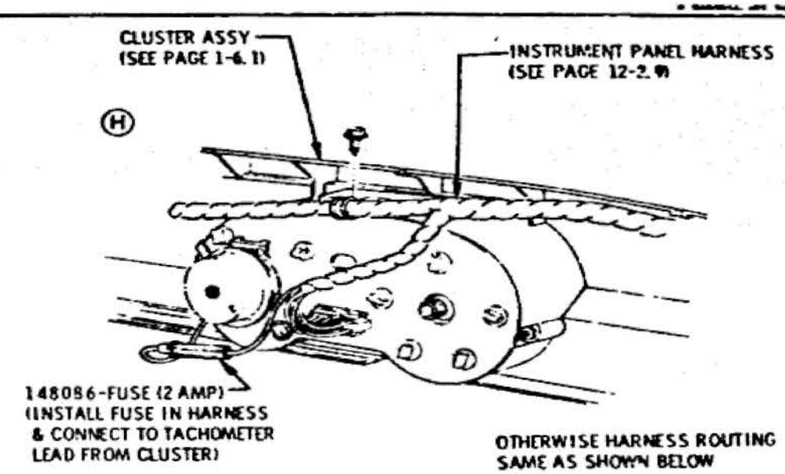

WIRING INSTALLATION TO REAR OF CLUSTER FOR 35U21

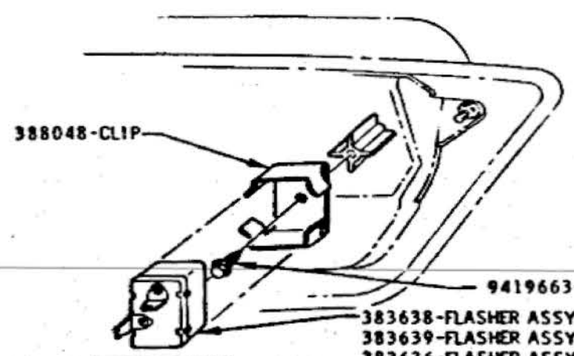

FIGURE 1

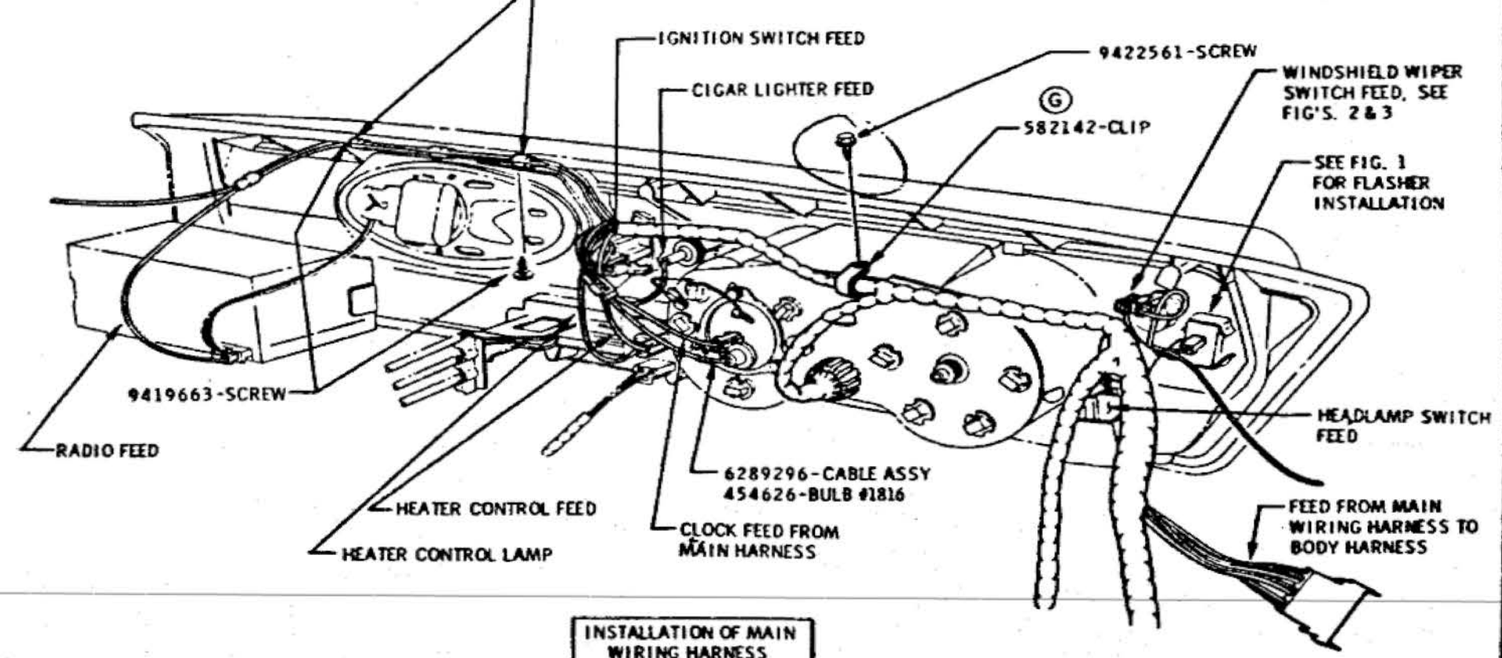

INSTALLATION OF MAIN WIRING HARNESS CONTROL PANEL

WIPER, FLASHER AND CONTROL PANEL WIRING.

DATE	SYM	REVISION	DR.	CK.	DATE	SYM	REVISION	DR.	CK.	DATE	SYM	REVISION	DR.	CK.
										7-1-65	E	WAS 9416927-BULB #1893	KI	DT
										5-17-65	D	VIEWS REVISED		UP
					3-1-66	H	VIEW ADDED	GC	DT	5-17-65	C	VIEW ADDED	CB	UP
					9-28-65	G	CLIP LOCATION REVISED	OM	DT	4-28-65	B	WAS 9421977 SCREW	JC	DT
					8-13-65	F	VIEWS REV. & RENDERED	OM	UP	4-12-65	A	WAS 2916577 CABLE ASSY.	FG	DT

INSTALLATION **ELECTRICAL**

DATE APRIL 6, 1965 — FIRST USED 1966 — Oldsmobile GRAPHIC ILLUSTRATION

DR. BY DURT MAY

CHECKED H. VAN PELT

APPR. D. SPERANCE

SERIES A

REF. 35U20 & H

PAGE 12-2.8

PART NO. 589998

OLDSMOBILE DIVISION GENERAL MOTORS CORPORATION LANSING — MICHIGAN

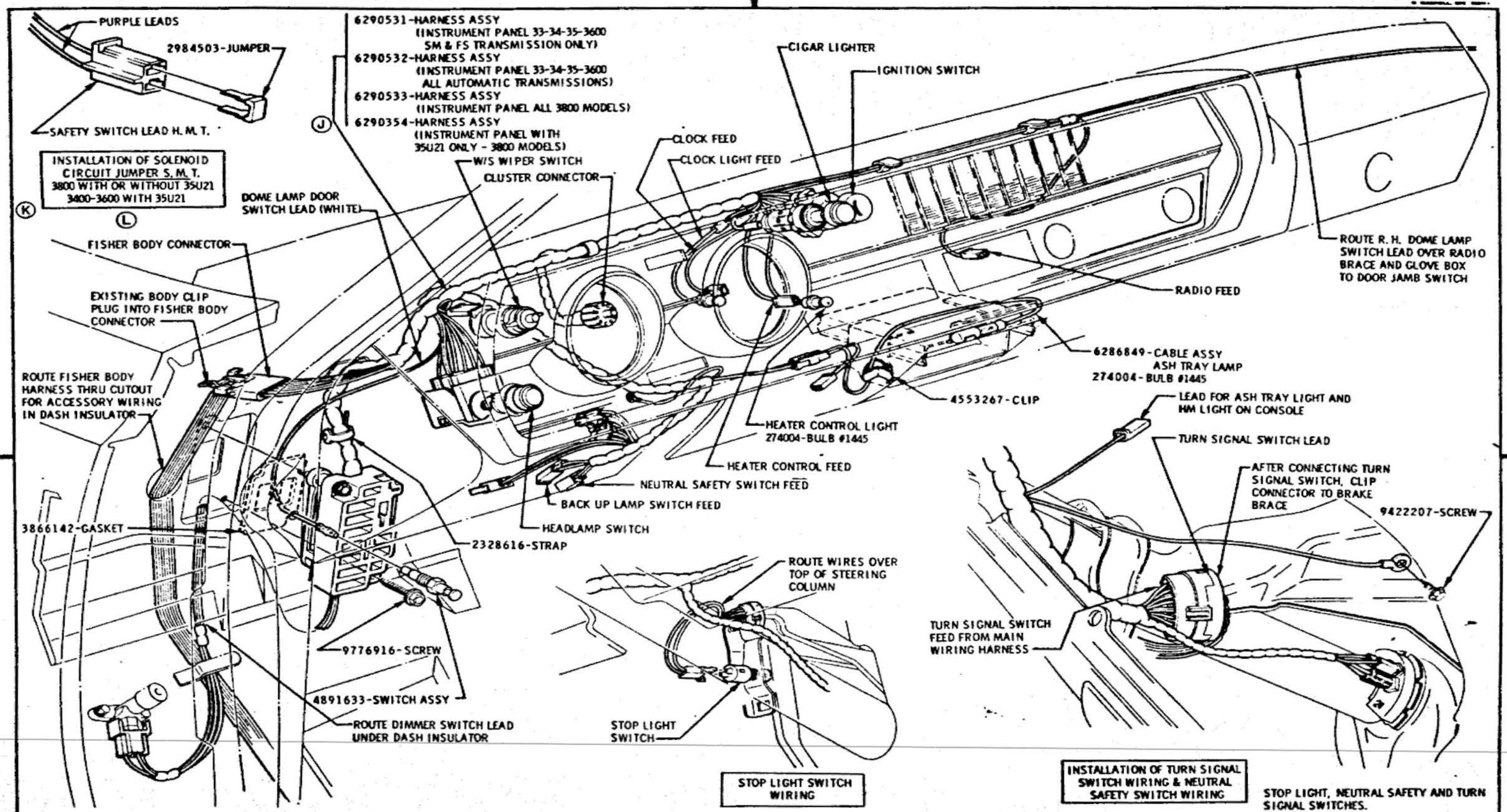

DATE	SYM	REVISION	DR.	CK.	DATE	SYM	REVISION	DR.	CK.	DATE	SYM	REVISION	DR.	CK.
					2-28-66	K	NOTE REVISED	AL	DT	8-13-65	E	CLIP ADDED	DT	VP
					2-23-66	J	NOTE ADDED	RW	DT	8-10-65	D	PART NO'S ADDED	DT	VP
					1-5-66	H	HARNESS NO'S REVISED	RW	DT	7-8-65	C	WAS 9417863-BULB #90	RI	RB
					11-30-65	G	VIEW ADDED	DT	DT	7-8-65	B	WAS 9419303 SCREW	RI	RB
4-1-66	L	VIEW TITLE REVISED	FL	DT	9-20-65	F	BACKGROUND REVISED	CB	DT	5-10-65	A	ASH TRAY LAMP ADDED	DT	VP

INSTALLATION	ELECTRICAL		
DATE APRIL 6, 1965	FIRST USED 1966	Oldsmobile Service ILLUSTRATION	PAGE 12-2.9
DR. BY. CURT MAY			
CHECKED H. VAN PELT	SERIES A	REF. 10H-L	PART NO. 589998
APPR. L. SHAHAN			
APPR.			

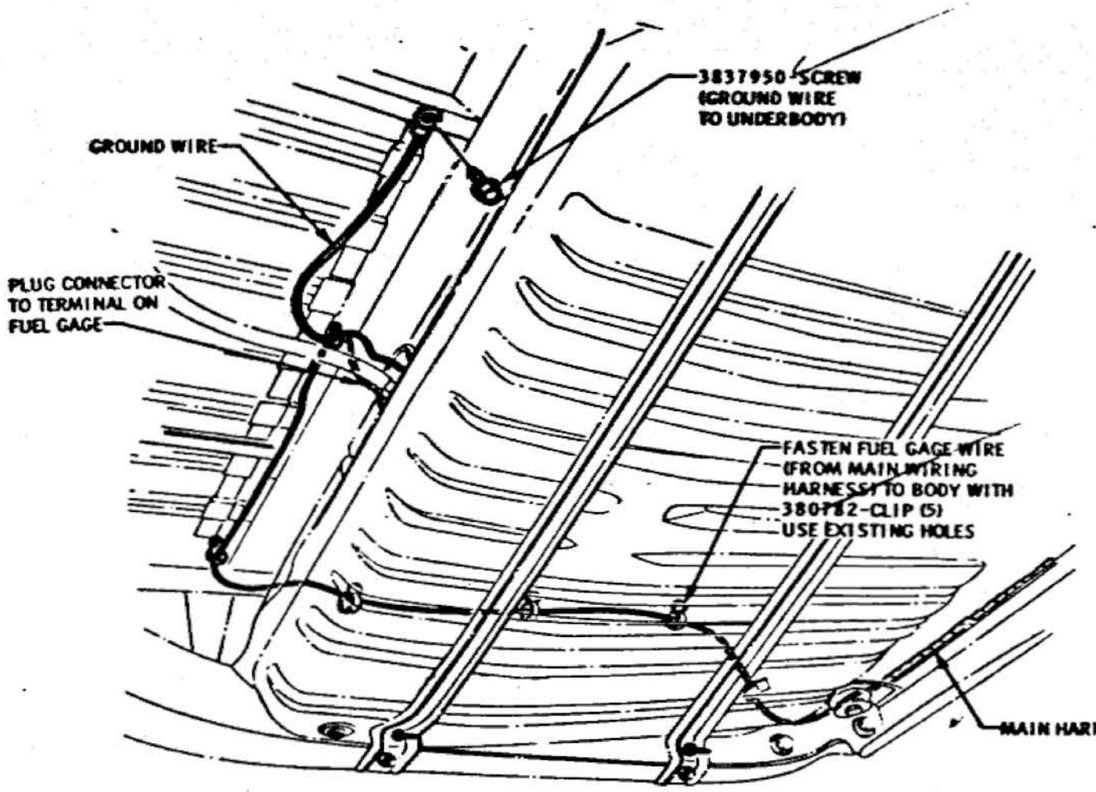

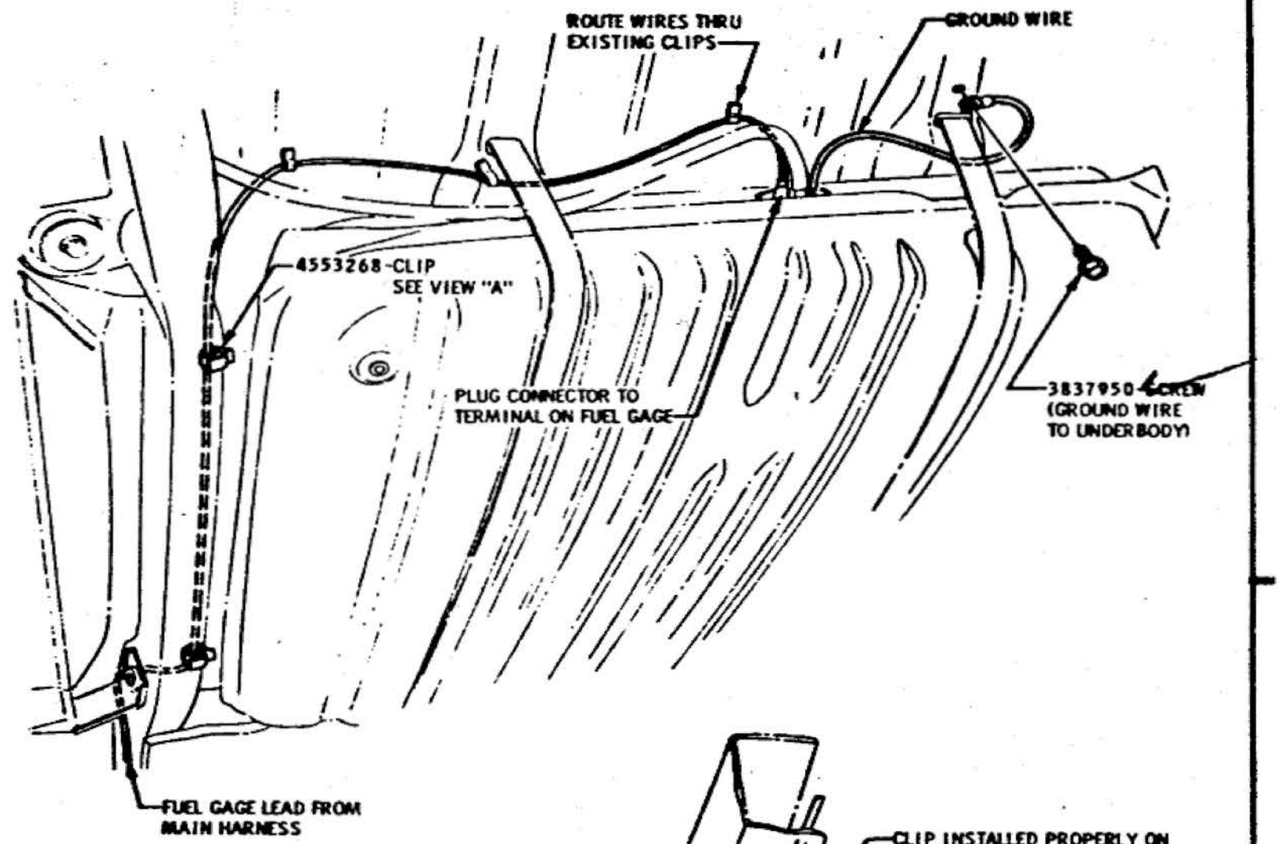

FUEL TANK WIRING
FOR EXTENDED STATION WAGONS

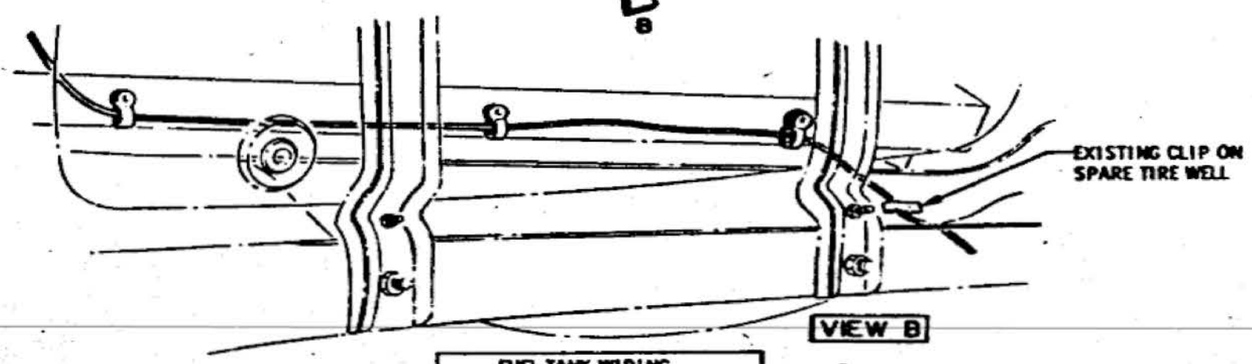

VIEW B

FUEL TANK WIRING
FOR STANDARD STATION WAGONS

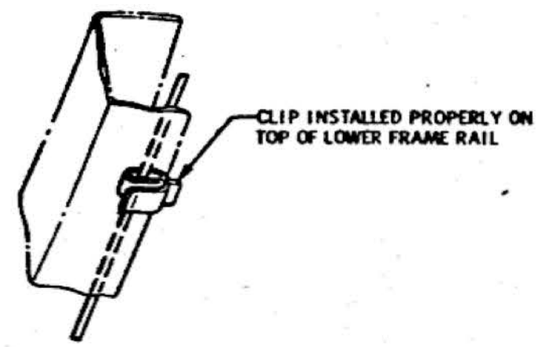

VIEW A

FUEL TANK WIRING (ALL STATION WAGONS).

DATE	SYM	REVISION	DR.	CK.	DATE	SYM	REVISION	DR.	CK.	DATE	SYM	REVISION	DR.	CK.

INSTALLATION ELECTRICAL

DATE APRIL 2, 1965
DR. BY QUIET MAY
CHECKED H. VAN PELT
APPR. D. S. EVERLINE
APPR.

FIRST USED 1966

Oldsmobile Classic ILLUSTRATION

PAGE 12-2.10

SERIES A

REF. RJ

PART NO. 589998

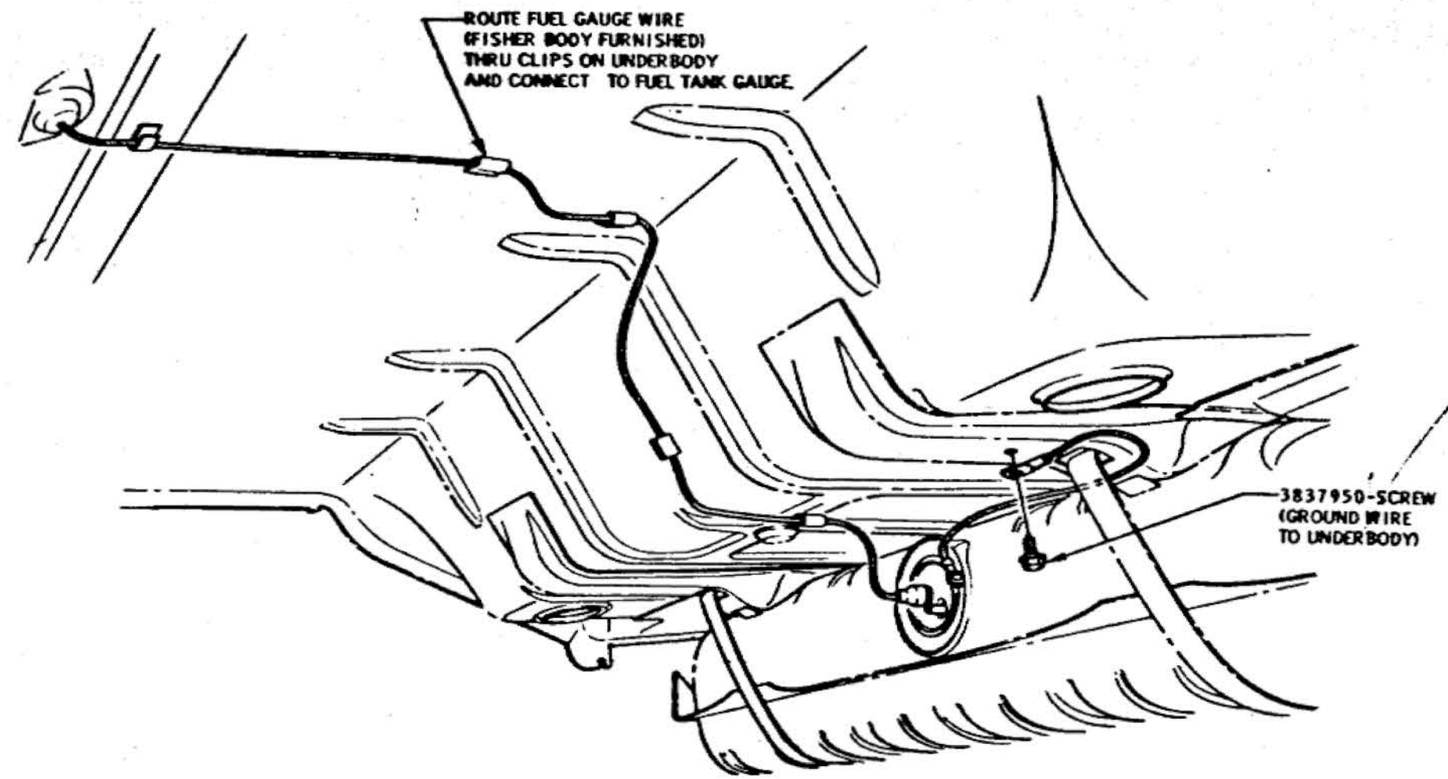

FUEL TANK WIRING
FOR SEDANS

FUEL TANK WIRING (EXCEPT S. W. I.

DATE	SYM	REVISION	DR.	CK.	DATE	SYM	REVISION	DR.	CK.	DATE	SYM	REVISION	DR.	CK.

INSTALLATION ELECTRICAL

DATE APRIL 2, 1965
DR. BY CURT MAY
CHECKED H. VAN PELT
APPR. D SEVERANCE
APPR.

FIRST USED 1966 — Oldsmobile Service ILLUSTRATION

SERIES A — REF. 12

PAGE 12-2 11

PART NO. 589998

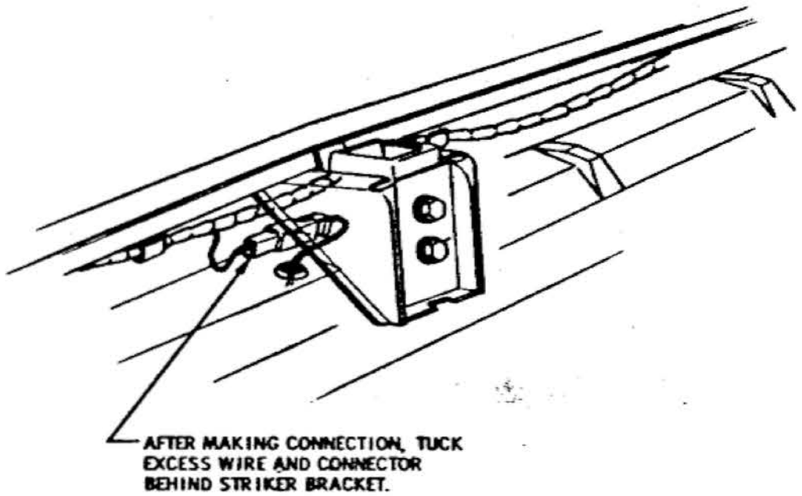

LICENSE LAMP WIRING FOR SEDANS

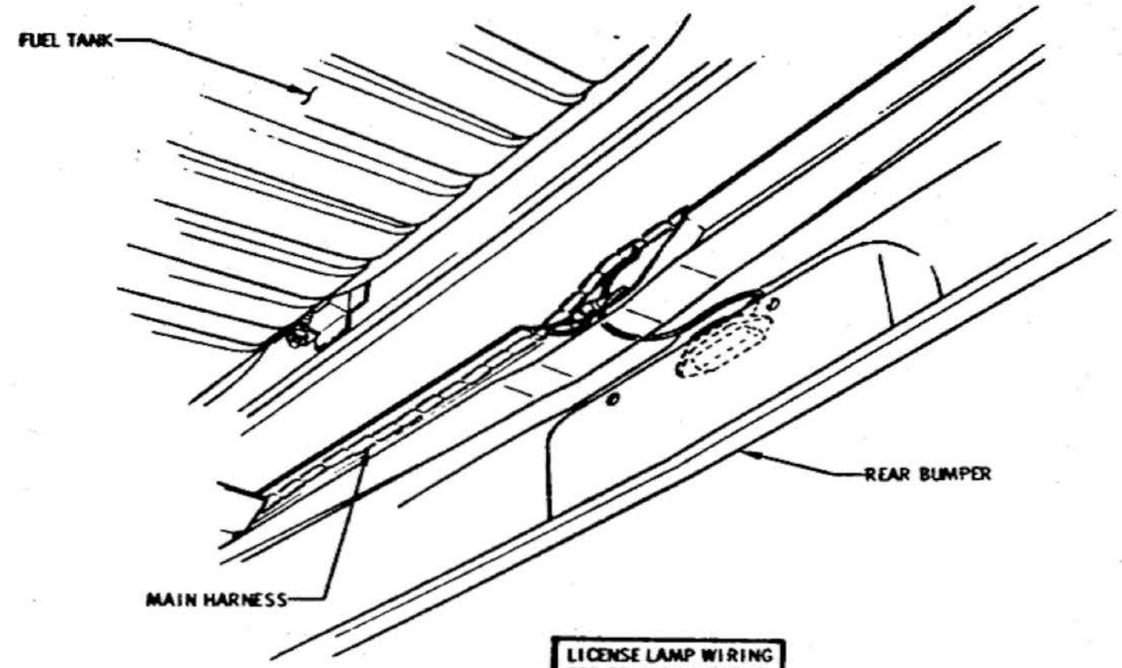

LICENSE LAMP WIRING FOR STATION WAGONS

LICENSE LAMP WIRING (ALL MODELS).

DATE	SYM	REVISION	DR.	CK.	DATE	SYM	REVISION	DR.	CK.	DATE	SYM	REVISION	DR.	CK.

INSTALLATION ELECTRICAL

DATE APRIL 2, 1965
DR. BY CURT MAY
CHECKED H. VAN PELT
APPR. D. SRUEHARD
APPR.

FIRST USED 1966 — Oldsmobile Service ILLUSTRATION

SERIES A — REV. 12

PAGE 12-2.12

PART NO. 589998

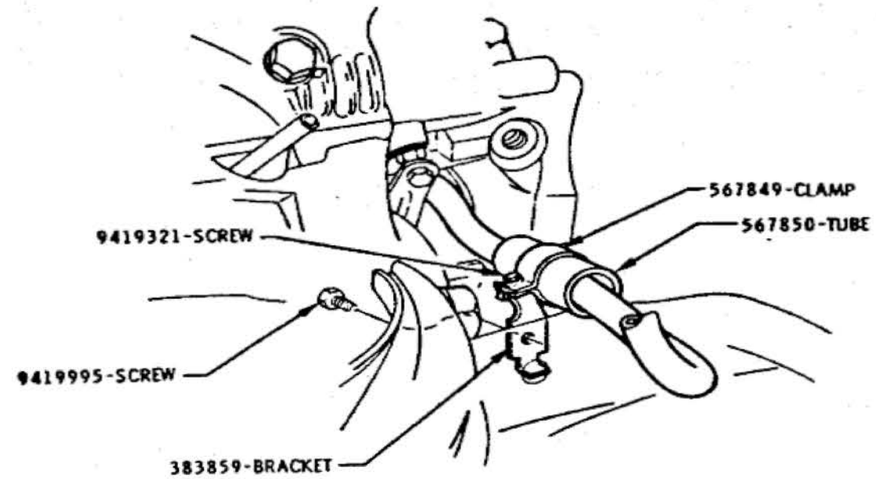

HMT STARTER CABLE ROUTING

Ⓓ

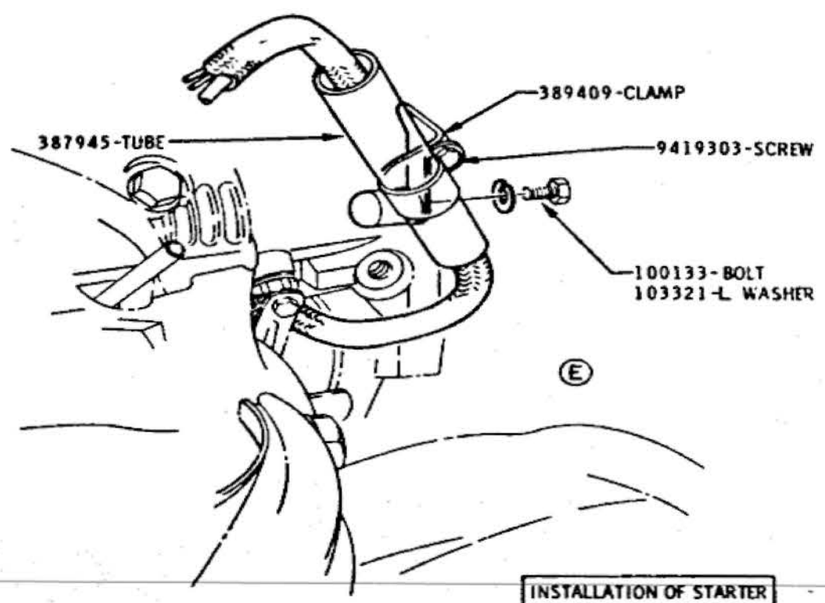

Ⓔ

INSTALLATION OF STARTER WIRING TUBE TO ENGINE

SM & FS ONLY

442 ONLY

Ⓒ

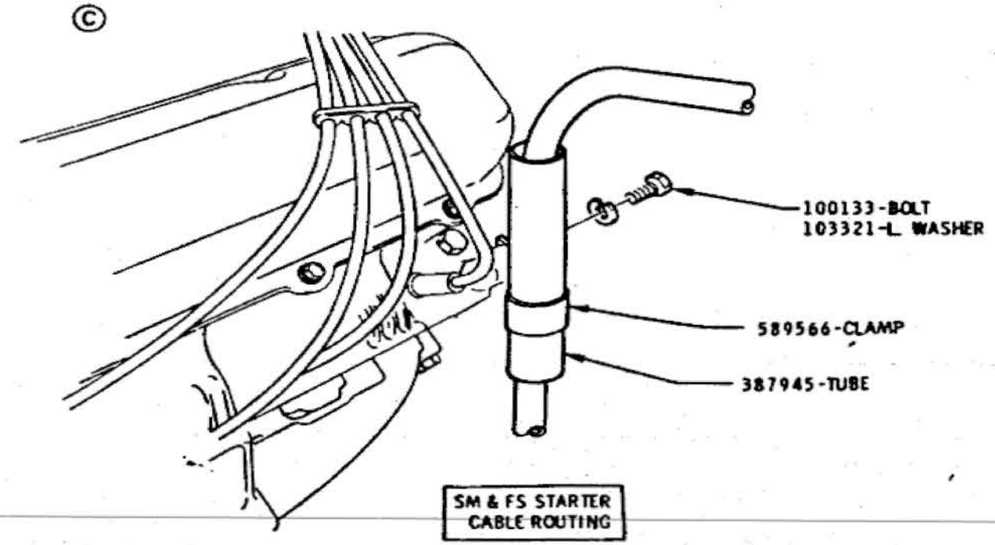

SM & FS STARTER CABLE ROUTING

(V-8 ONLY)

⚠ 2-4 LB. FT.

STARTER CABLE TUBES

DATE	SYM	REVISION	DR.	CK.	DATE	SYM	REVISION	DR.	CK.	DATE	SYM	REVISION	DR.	CK.
										9-28-66	E	NOTE REMOVED		DT
										9-14-65	D	VIEW REMOVED		DT
										9-4-65	C	VIEWS ADDED		DT
										5-6-65	B	NOTE ADDED		VP
										5-6-65	A	VIEW REMOVED		VP

INSTALLATION — ELECTRICAL

DATE APRIL 6, 1965
DR. BY CURT MAY
CHECKED H. VAN PELT
APPR. D SEVERANCE
APPR.

FIRST USED 1966 — Oldsmobile Graphic Illustration

SERIES A

REF. 55WED KH

PAGE 12-2.13

PART NO. 589998

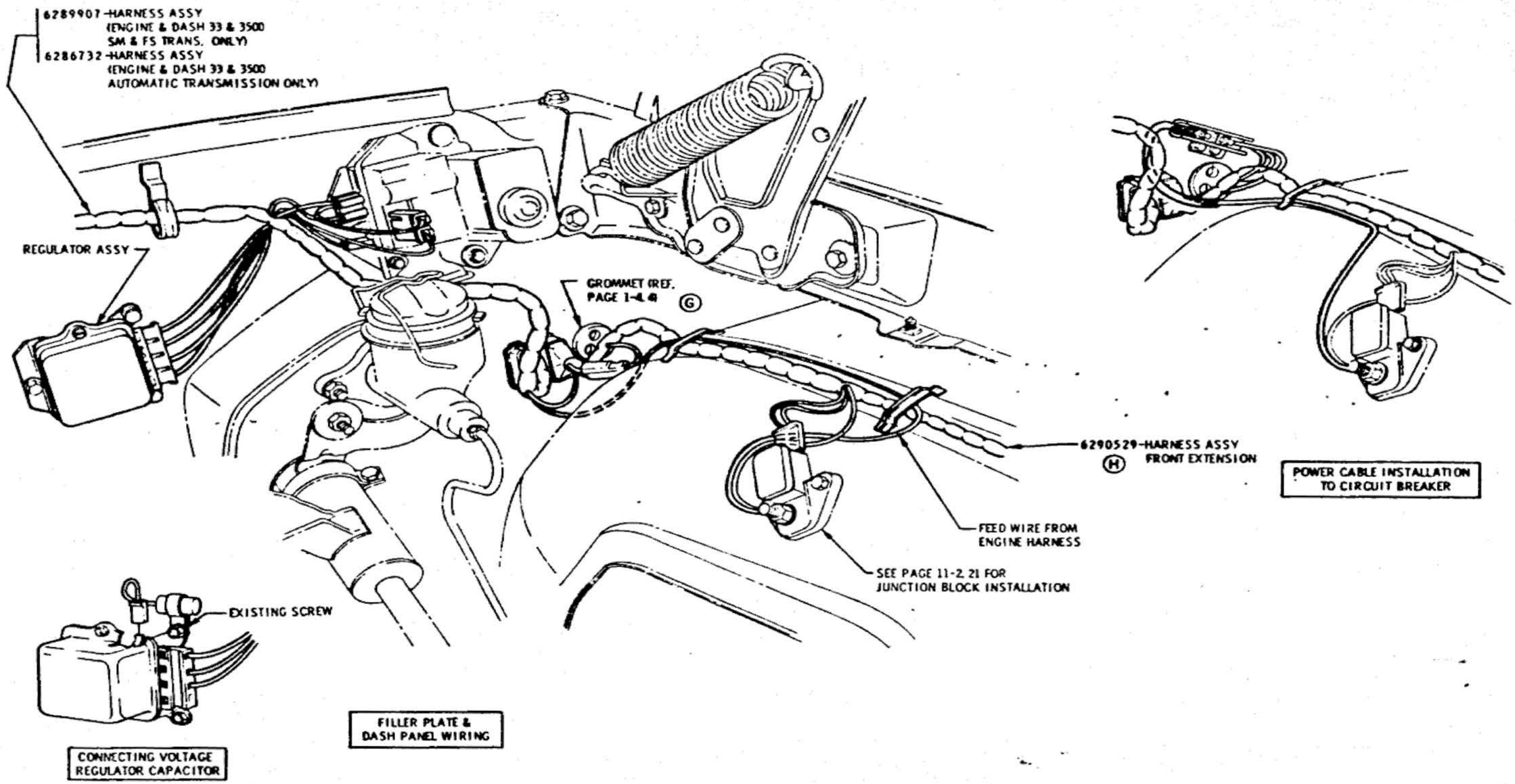

SEE PAGE 12-2.1 FOR BALANCE OF PART NOS.

FILLER PLATE, DASH PANEL & CIRCUIT BREAKER WIRING. (L-6 ONLY).

DATE	SYM	REVISION	DR.	CK.	DATE	SYM	REVISION	DR.	CK.	DATE	SYM	REVISION	DR.	CK.
										9-15-65	E	3500 WAS 9600	OM	DT
										9-15-65	D	VIEW ADDED	OM	DT
					1-5-66	H	WAS 6286731	OM	DT	8-10-65	C	WAS 6289956-HARNESS	OM	VP
					10-27-65	G	NOTE REVISED	OM	DT	7-23-65	B	WAS 2987081-HARNESS	BP	VP
					10-12-65	F	PART NOS. REMOVED	OM	DT	7-1-65	A	WAS 581361-CLIP	OM	DT

INSTALLATION **ELECTRICAL**

DATE APRIL 9, 1965 — FIRST USED 1966 — Oldsmobile ILLUSTRATION — PAGE 12-2.14

DR. BY CURT MAY — CHECKED H. VAN PELT — APPR. D. SEWPLANCE — APPR.

SERIES A — REF. RH GY — PART NO. 589998

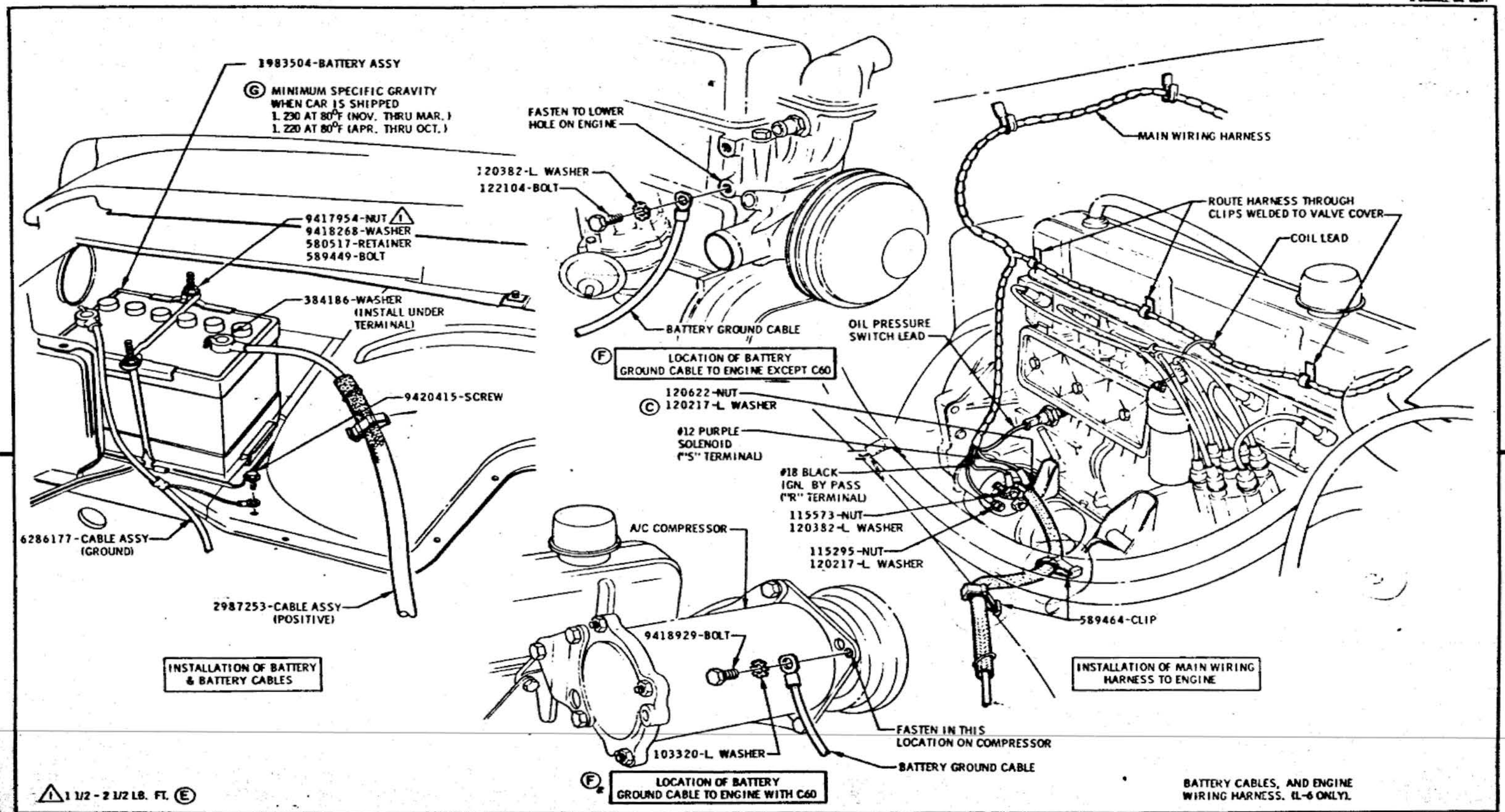

DATE	SYM	REVISION	DR.	CK.	DATE	SYM	REVISION	DR.	CK.	DATE	SYM	REVISION	DR.	CK.
										10-5-65	E	TORQUE SPEC ADDED	LE	VP
										8-3-65	D	REDRAWN		
										6-4-65	C	WAS 121841-L WASHER	DA	VP
					4-21-65	G	NOTE ADDED	DM	FS	5-8-65	B	VIEW ADDED	DM	FS
					9-8-65	F2	GROUND CABLE REQ'D	DT	DT	4-20-65	A	WAS 2983555 CABLE		DT

INSTALLATION ELECTRICAL

DATE APRIL 6, 1965
DR. BY KURT MAY
CHECKED H. VAN PELT
APPR. E. S. [illegible]
APPR.

FIRST USED 1966
Oldsmobile service ILLUSTRATION
SERIES A
REF. 12 A 12 B
PAGE 12-2.15
PART NO. 589998

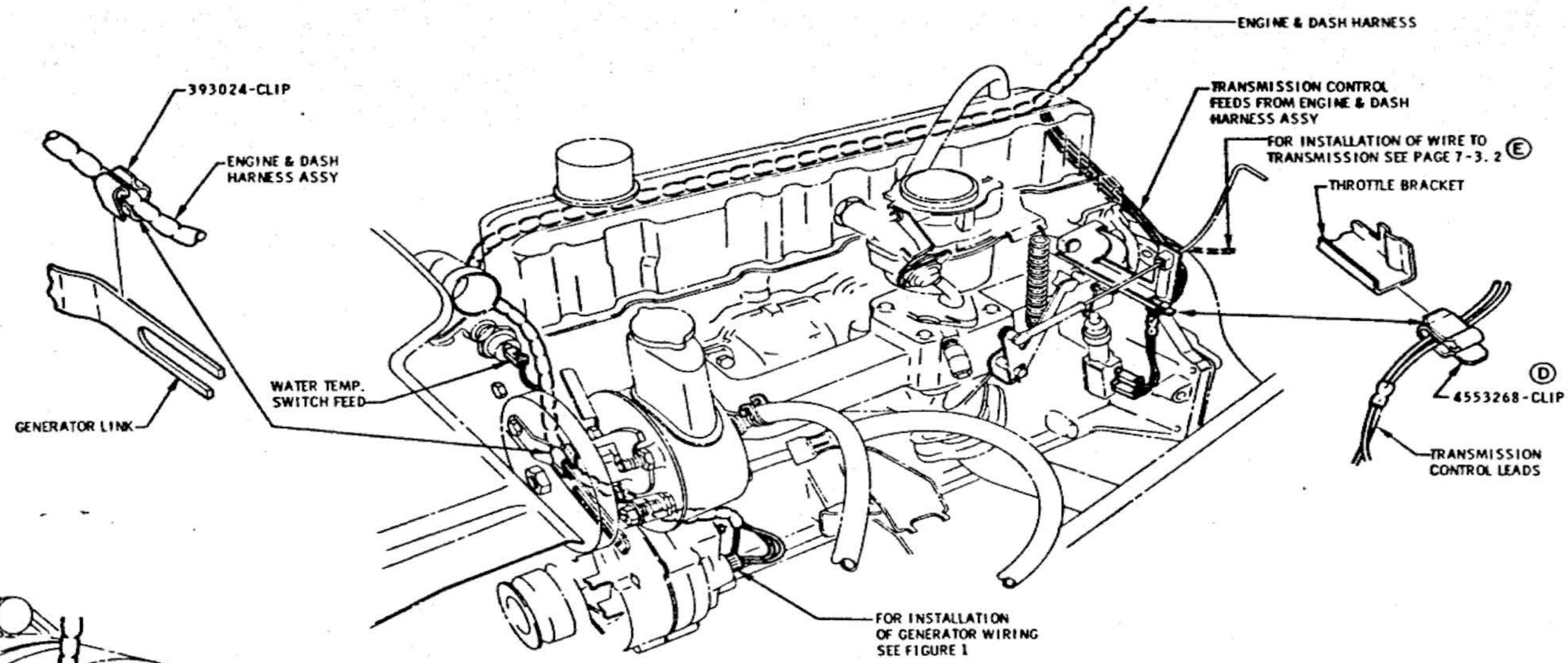

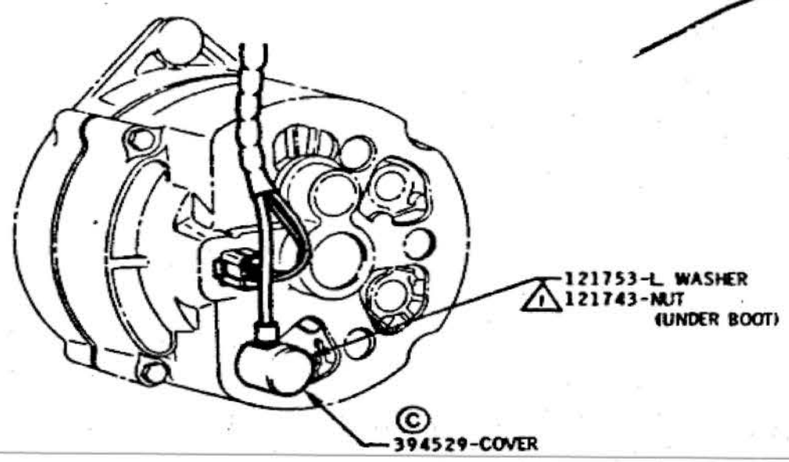

FIGURE 1

(1) 2-4 LB. FT.

L6 ENGINE WIRING ON L.H. SIDE

DATE	SYM	REVISION	DR.	CK.	DATE	SYM	REVISION	DR.	CK.	DATE	SYM	REVISION	DR.	CK.
										4-26-66	E	WAS PAGE 7-2.3		DT
										4-13-66	D	WAS 415780-CLIP		DT
										10-5-65	C	394529-COVER ADDED	CM	DT
										8-11-65	B	NOTE ADDED	CM	VP
										7-29-65	A	TORQUE ADDED		VP

INSTALLATION ELECTRICAL

DATE MAY 15, 1965
DR. BY CURT MAY
CHECKED F. SANTZ
APPR.
APPR.

FIRST USED 1966

Oldsmobile ILLUSTRATION

SERIES A

REV. BY

PAGE 12-2.16

PART NO. 589998

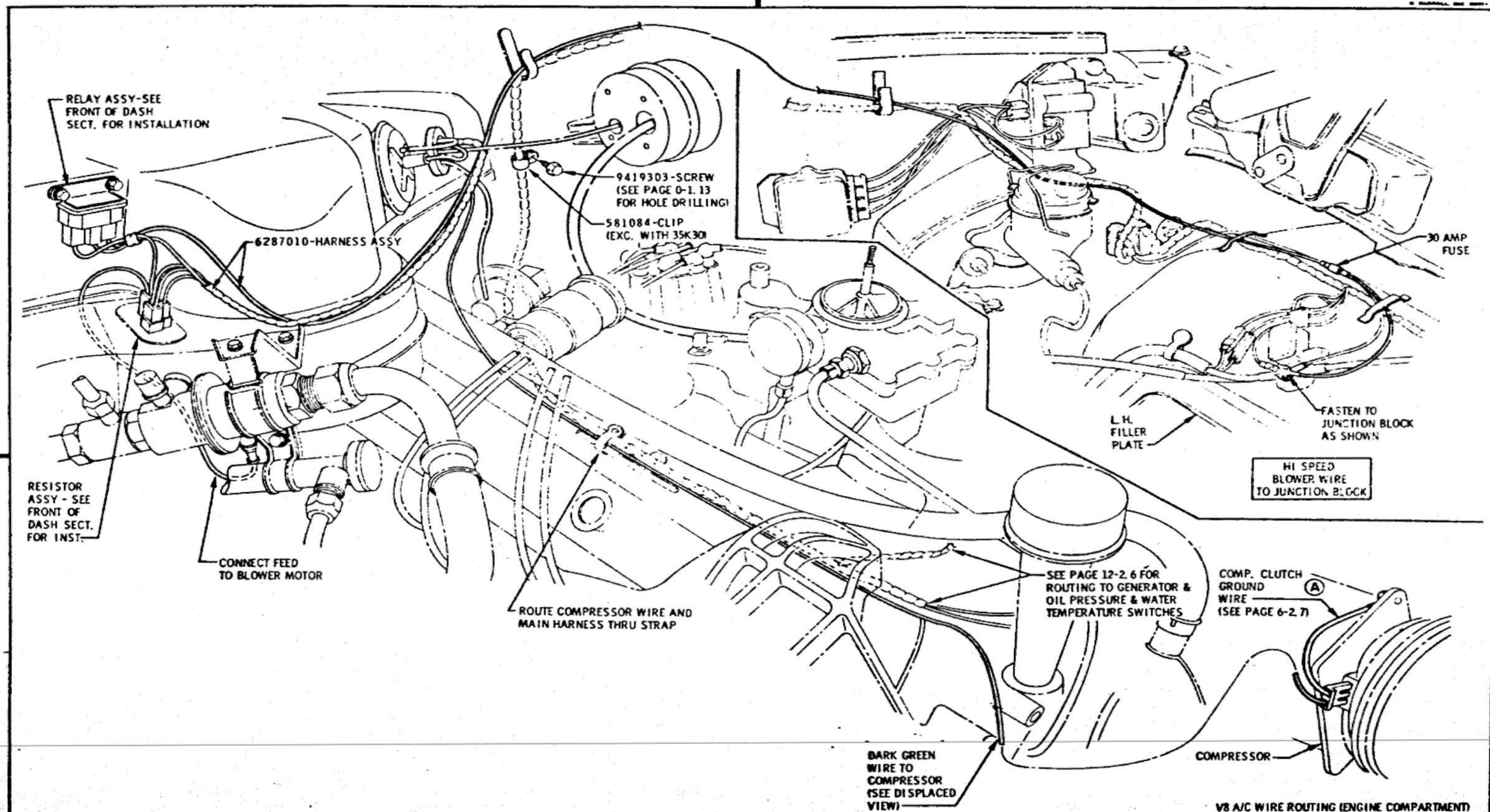

V8 A/C WIRE ROUTING (ENGINE COMPARTMENT)

DATE	SYM	REVISION	DR.	CK.	DATE	SYM	REVISION	DR.	CK.	DATE	SYM	REVISION	DR.	CK.
										8-10-65	A	GROUND WIRE REROUTED		

INSTALLATION	ELECTRICAL		
DATE JULY 29, 1965	FIRST USED 1966	Oldsmobile Service ILLUSTRATION	PAGE 12-2.17
DR. BY JOE BALL			
CHECKED H. VAN PELT	SERIES A	REF. 35C60	PART NO. 589998
APPR. K.E. HALEITZKE			
APPR.			

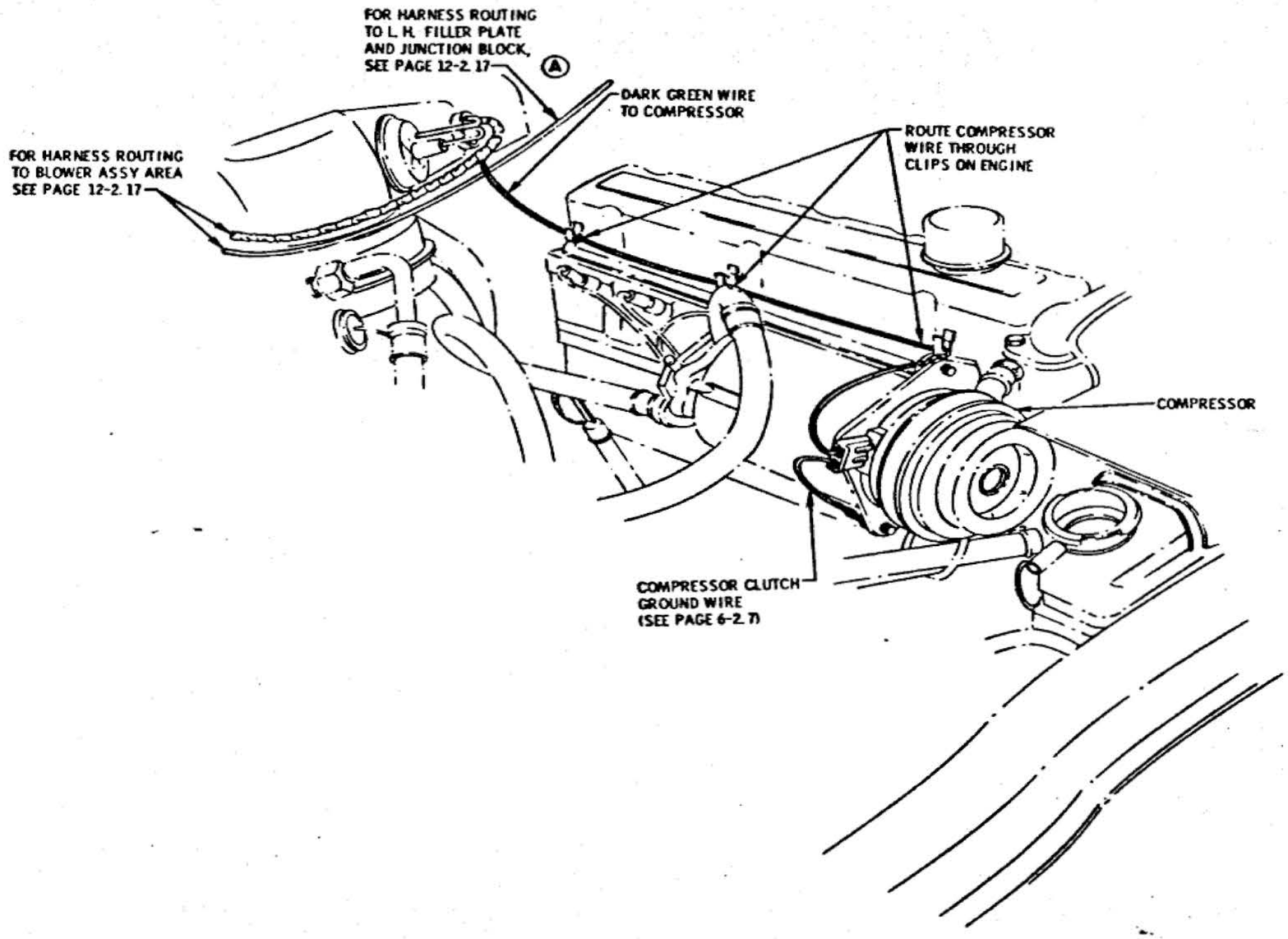

L-6 A/C COMPRESSOR WIRE ROUTING

DATE	SYM	REVISION	DR.	CK.	DATE	SYM	REVISION	DR.	CK.	DATE	SYM	REVISION	DR.	CK.
										1-21-66	A	NOTE & WIRE ADDED		

INSTALLATION ELECTRICAL

DATE AUGUST 3, 1965
DR. BY B. PARKER
CHECKED H. VAN PELT
APPR. K.E. HALBITZKE
APPR.

FIRST USED 1966 — Oldsmobile Service ILLUSTRATION — SERIES A — REF. 85C60

PAGE 12-2.18

PART NO. 589998

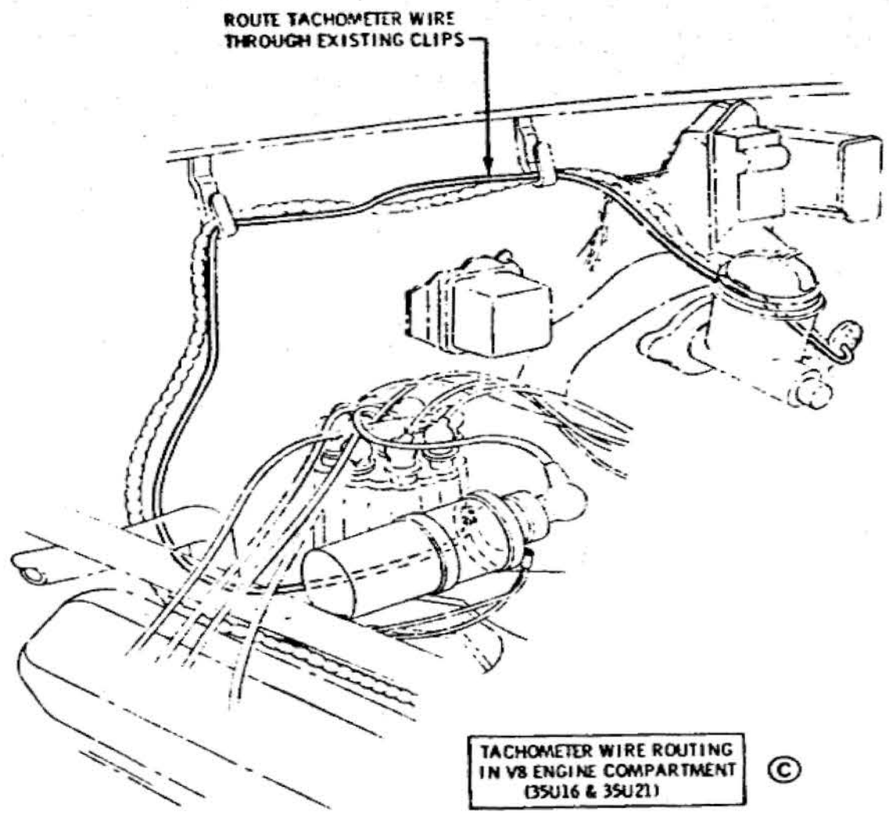

TACHOMETER WIRE ROUTING IN V8 ENGINE COMPARTMENT (35U16 & 35U21) ©

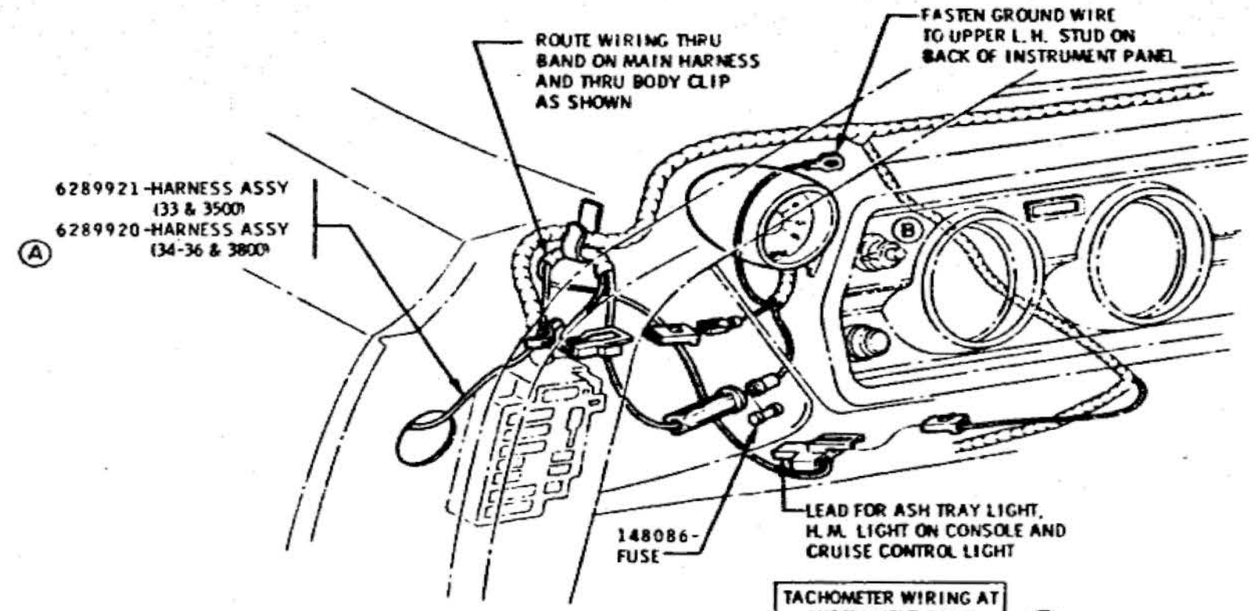

TACHOMETER WIRING AT INSTRUMENT PANEL (35U16 ONLY) ©

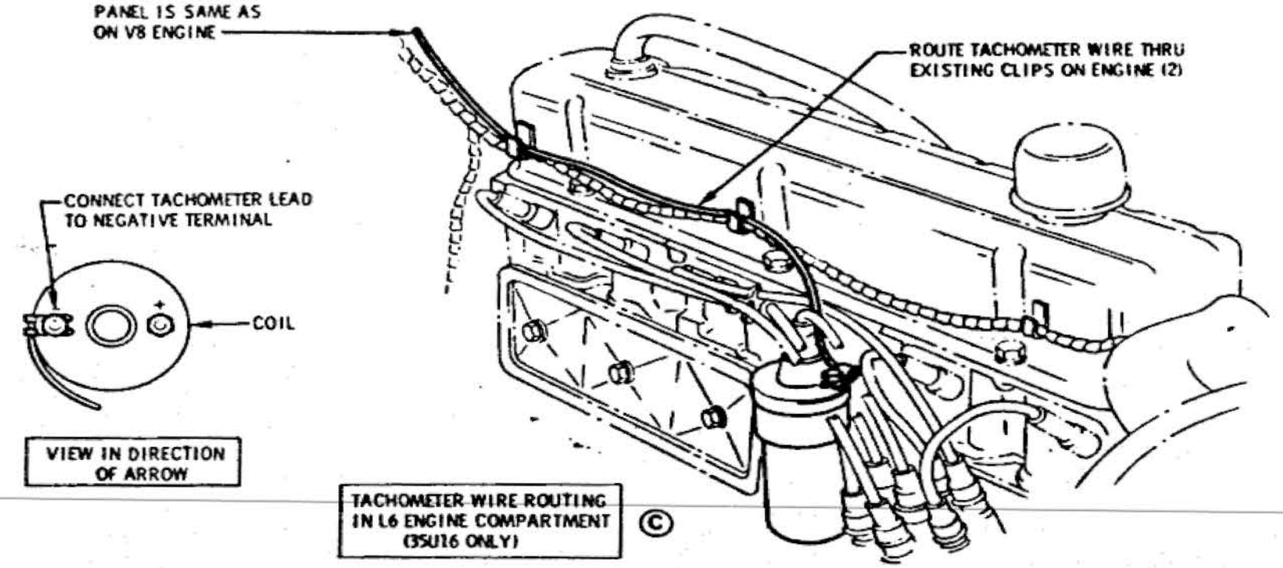

VIEW IN DIRECTION OF ARROW

TACHOMETER WIRE ROUTING IN L6 ENGINE COMPARTMENT (35U16 ONLY) ©

TACHOMETER WIRE ROUTING

DATE	SYM	REVISION	DR.	CK.	DATE	SYM	REVISION	DR.	CK.	DATE	SYM	REVISION	DR.	CK.
										2-28-66	C	TITLES REVISED	PW	DT
										9-20-65	B	BACKGROUND REVISED	CG	DT
										6-18-65	A	WAS 6286995 CABLE ASSY	CG	VP

INSTALLATION ELECTRICAL

DATE MAY 25, 1965
DR. BY BEAUDOIN
CHECKED H. VAN PELT
APPR.
APPR.

FIRST USED 1966 — Oldsmobile Service ILLUSTRATION

SERIES A — REF. 35-U-16 BR-35787

PAGE 12-2.20

PART NO. 589998

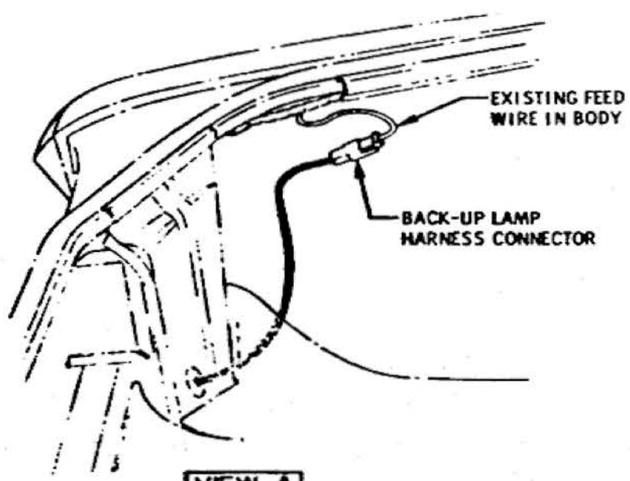

VIEW A

CONNECTION OF WIRING HARNESS

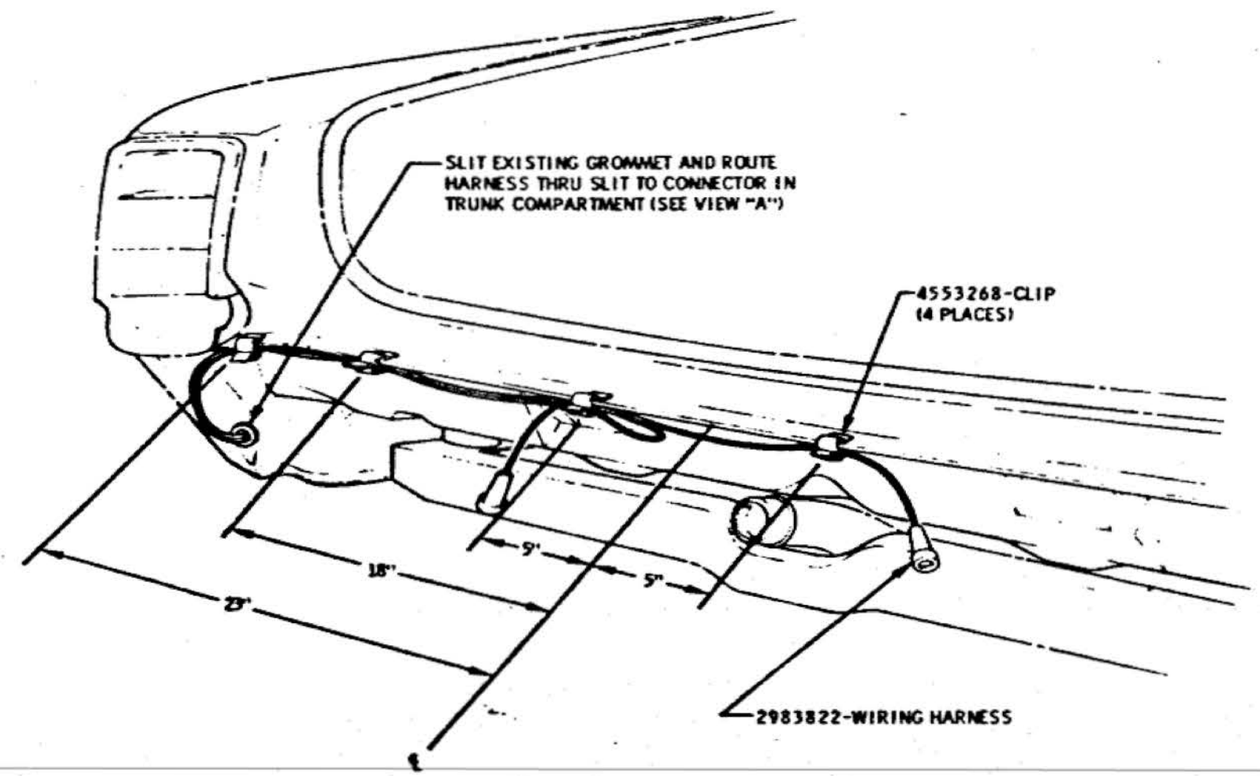

BACK-UP LAMP HARNESS ROUTING IN REAR OF CAR (EXC. STA. WAG.)

DATE	SYM	REVISION	DR.	CK.	DATE	SYM	REVISION	DR.	CK.	DATE	SYM	REVISION	DR.	CK.

INSTALLATION	ELECTRICAL		
DATE APRIL 25, 1965	FIRST USED 1966	Oldsmobile Graphic Illustration	PAGE 12-2.21
DR. BY J.V. GALL	SERIES A	REF. 35T86	PART NO. 589998
CHECKED			
APPR.			

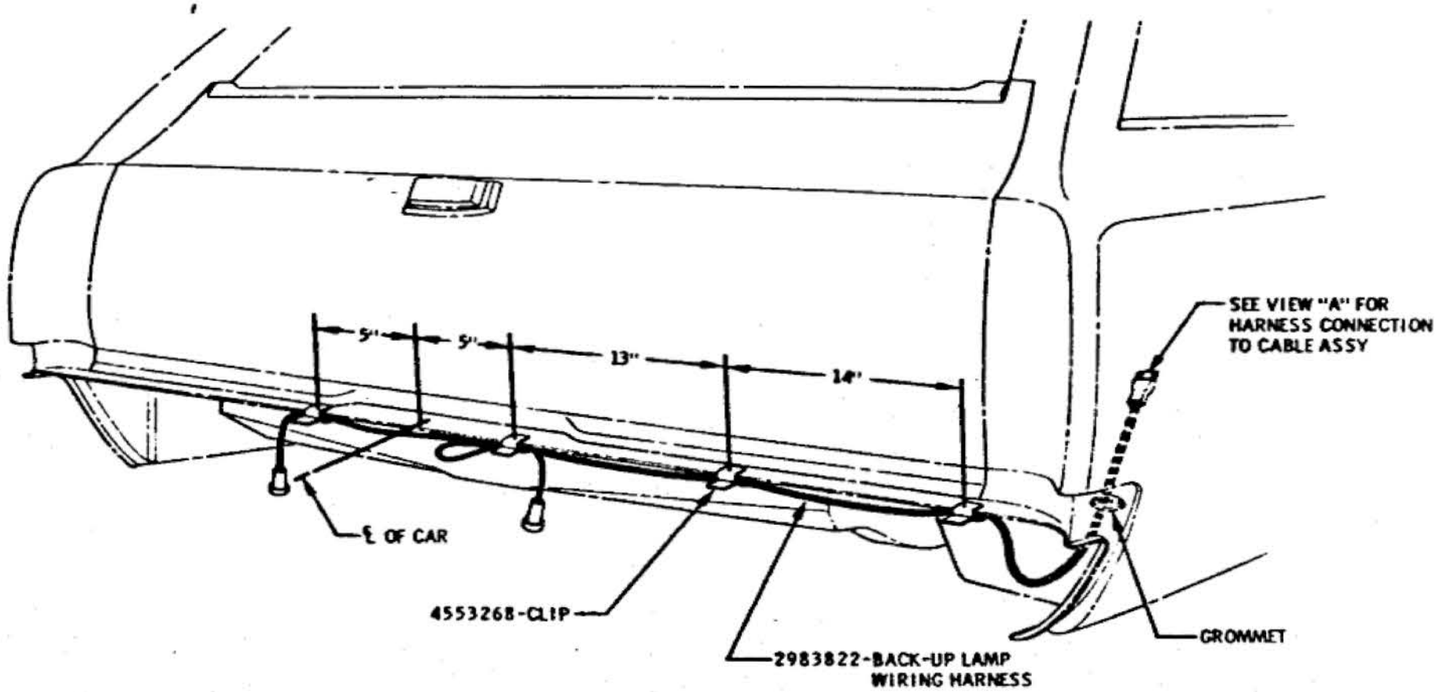

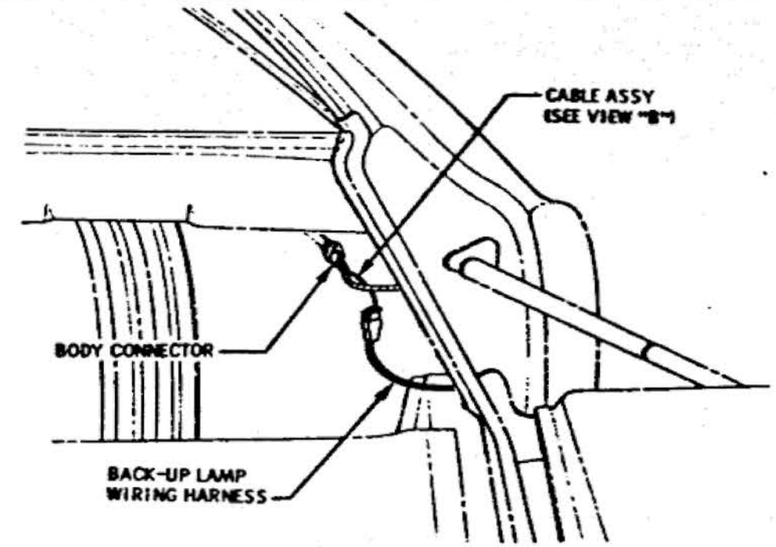

VIEW A

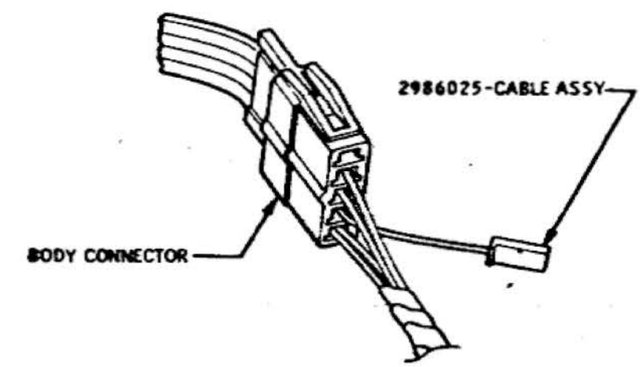

VIEW B

BACK-UP LAMP WIRE ROUTING FOR REAR OF CAR (STATION WAGONS)

DATE	SYM	REVISION	DR.	CK.	DATE	SYM	REVISION	DR.	CK.	DATE	SYM	REVISION	DR.	CK.

INSTALLATION	ELECTRICAL		
DATE MAR. 5, 1965	FIRST USED 1966	Oldsmobile Electric Illustration	PAGE 12-2.22
DR. BY JOE V. BALL			
CHECKED H. VAN PELT	SERIES A	REF. 35T86	PART NO. 589999
APPR. L. SAUNDERS			
APPR.			

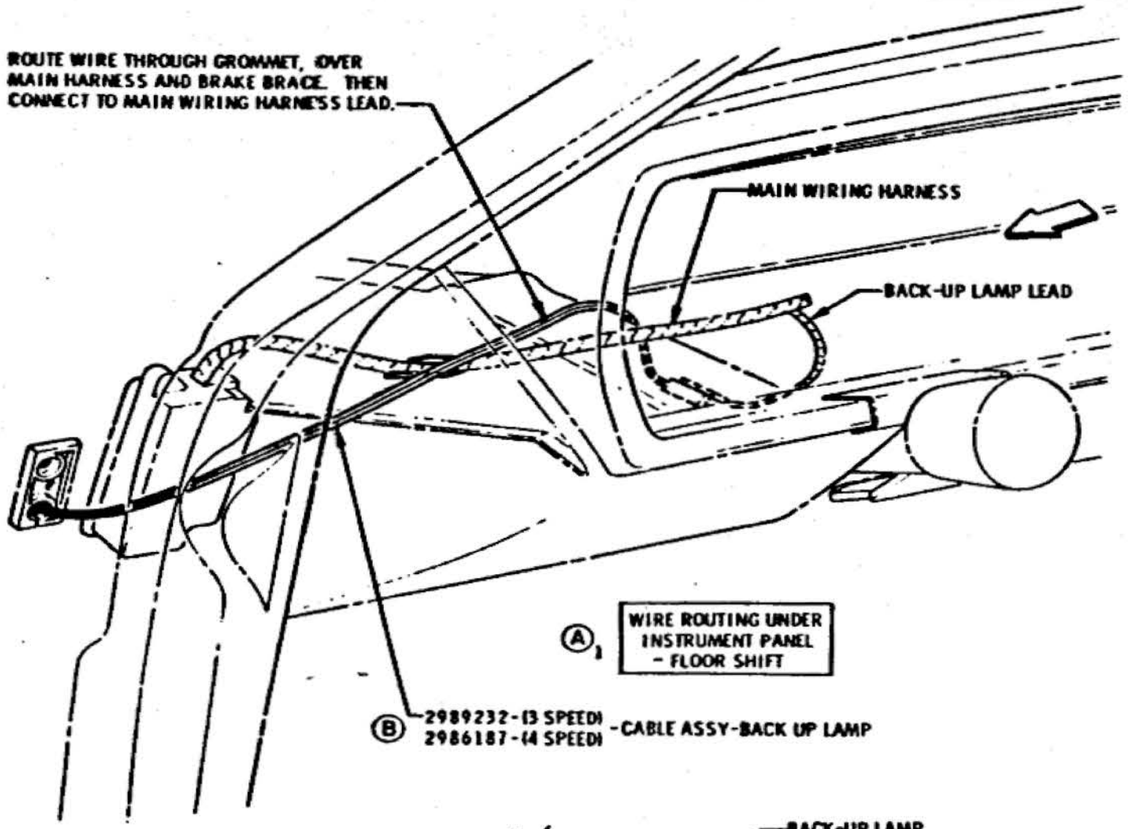

Ⓐ1 WIRE ROUTING UNDER INSTRUMENT PANEL - FLOOR SHIFT

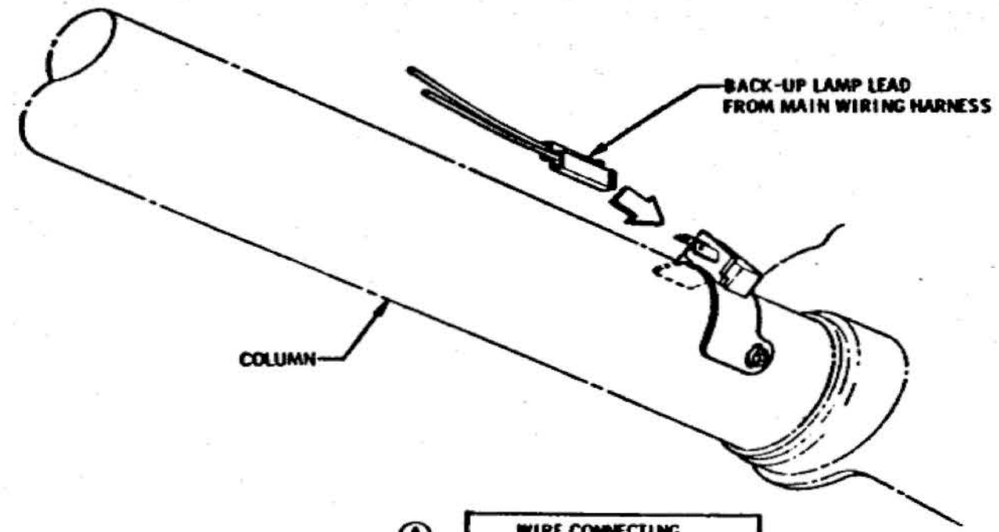

Ⓐ3 WIRE CONNECTING SYNCHROMESH-COLUMN SHIFT

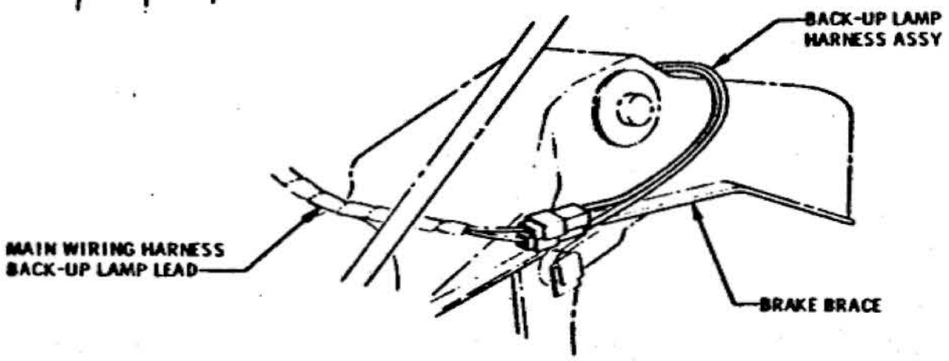

VIEW IN DIRECTION OF "ARROW"

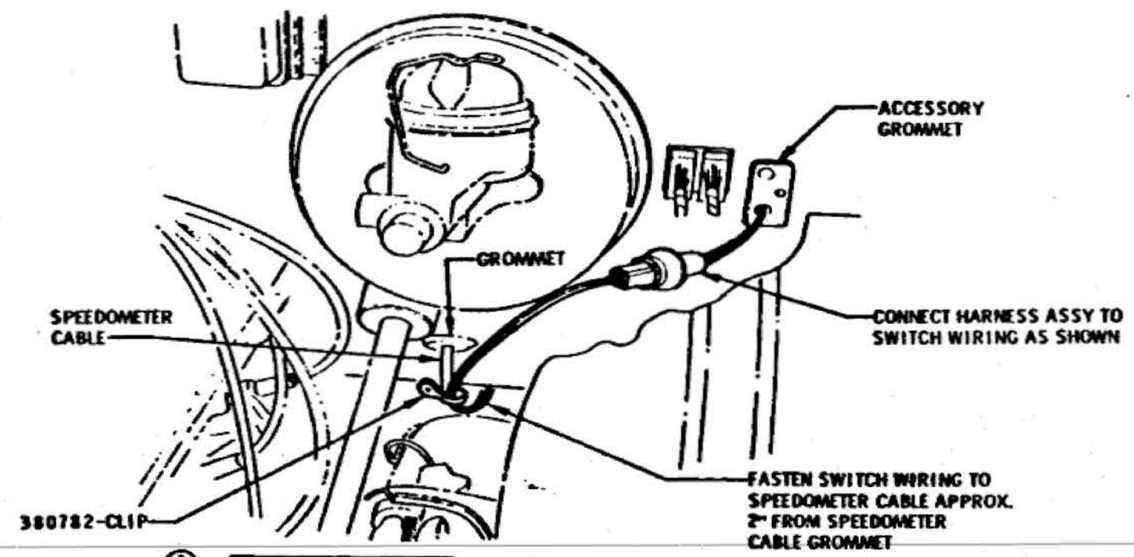

Ⓐ2 WIRE ROUTING IN ENGINE COMPARTMENT - FLOOR SHIFT

BACK-UP LAMP WIRING FOR 3 SPEED COLUMN SHIFT
BACK-UP LAMP WIRING FOR 3 & 4 SPEED FLOOR SHIFT

DATE	SYM	REVISION	DR	CK	DATE	SYM	REVISION	DR	CK	DATE	SYM	REVISION	DR	CK
										7-27-65	B	PART NO'S ADDED	JJ	VP
										4-20-65	A3	TITLES REVISED	JJ	VP

INSTALLATION ELECTRICAL

DATE MAR. 5, 1965
DR. BY JOE K. GALL
CHECKED H. VAN PELT
APPR. J. [illegible]
APPR.

FIRST USED 1966

Oldsmobile ILLUSTRATION

SERIES A

REF. 35T86

PAGE 12-2.23

PART NO. 589998

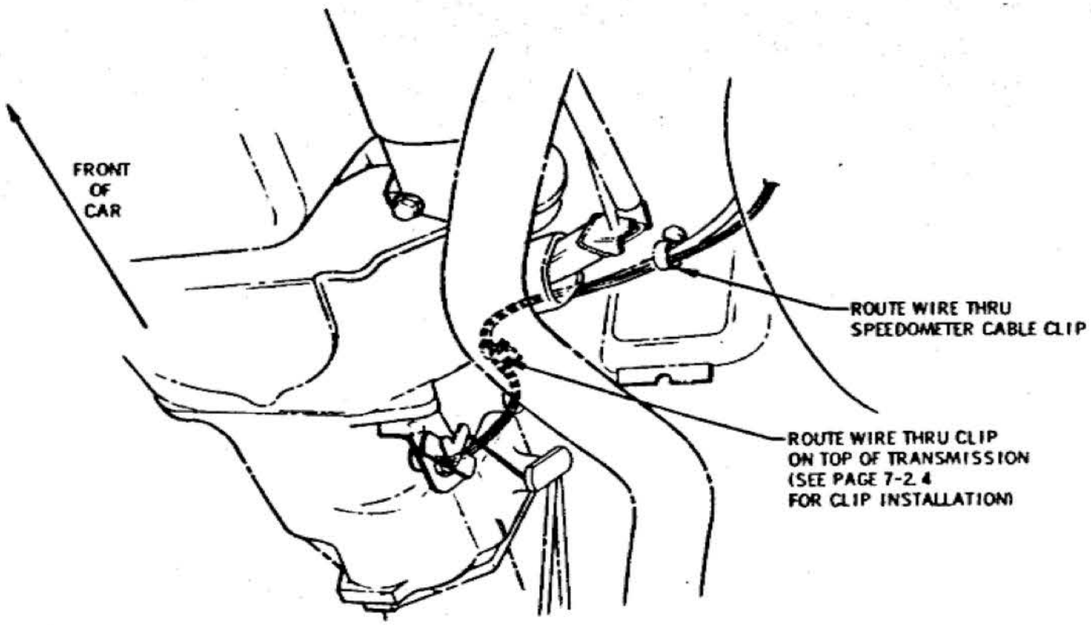

M14
WIRING ROUTING FROM TRANSMISSION

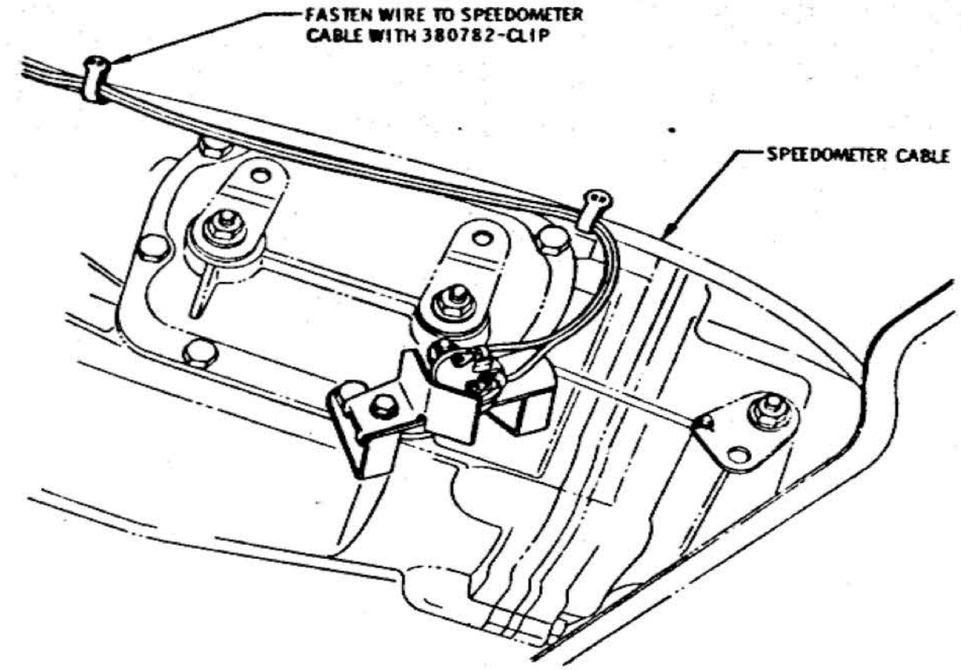

M20 & M21
WIRING ROUTING FROM TRANSMISSION

FOUR SPEED & M14 FLOOR SHIFT BACK-UP WIRE ROUTING

DATE	SYM	REVISION	DR.	CK.	DATE	SYM	REVISION	DR.	CK.	DATE	SYM	REVISION	DR.	CK.
										72965	A	VIEW ADDED FROM 12-2.25 ON UP		

INSTALLATION	ELECTRICAL		
DATE MAR. 5, 1965	FIRST USED 1966	Oldsmobile Service ILLUSTRATION	PAGE 12-2.24
DR. BY JOE V GALL			
CHECKED H. VANPELT	SERIES A	REF. MM MRO	PART NO. 589998
APPR. D. SEVERANCE			
APPR.			

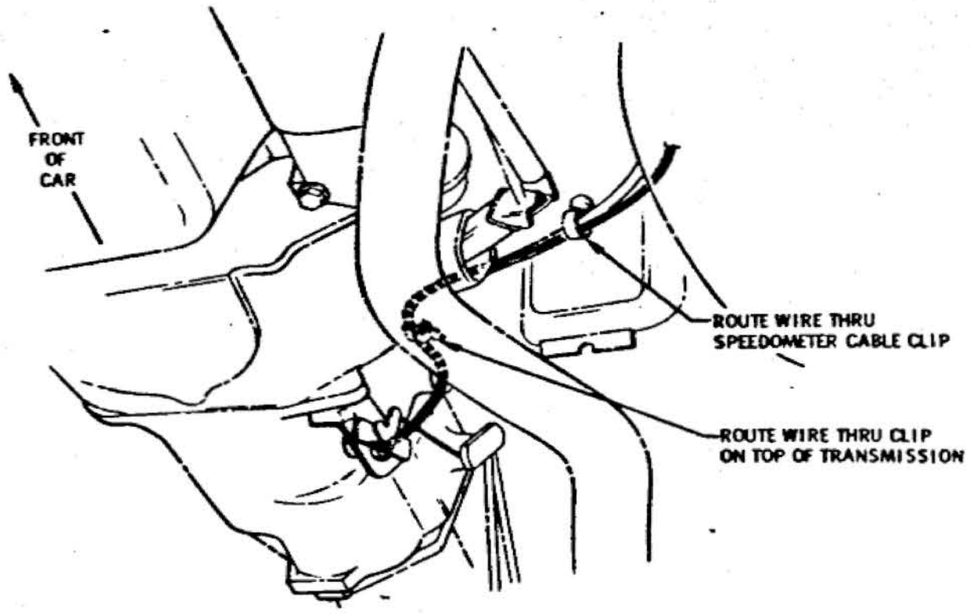

WIRE ROUTING FROM TRANSMISSION

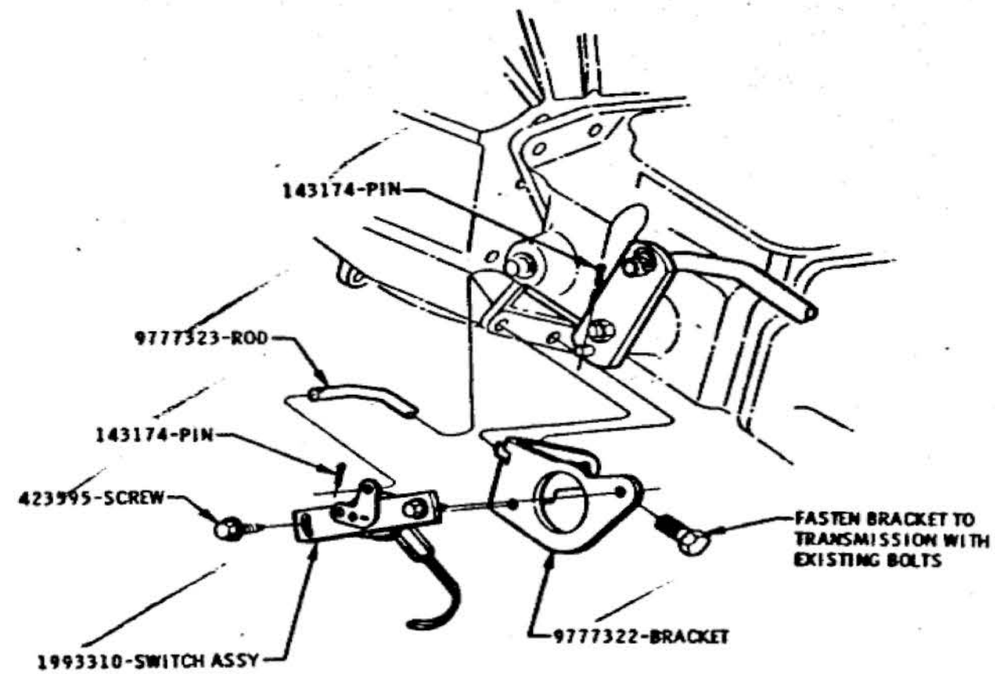

SWITCH FASTENING

BACK-UP LAMP SWITCH INSTALLATION AND WIRE ROUTING FOR 35M14

DATE	SYM	REVISION	DR.	CK.	DATE	SYM	REVISION	DR.	CK.	DATE	SYM	REVISION	DR.	CK.

INSTALLATION ELECTRICAL

DATE MAR. 5. 1965
DR. BY JOE V GALL
CHECKED H. VAN PELT
APPR. D-W STEINMETZ
APPR.

FIRST USED 1966
SERIES A
MOD. 35 TSC
Oldsmobile Graphic Illustration
PAGE 12-23
PART NO. 589998

OLDSMOBILE DIVISION GENERAL MOTORS CORPORATION LANSING — MICHIGAN

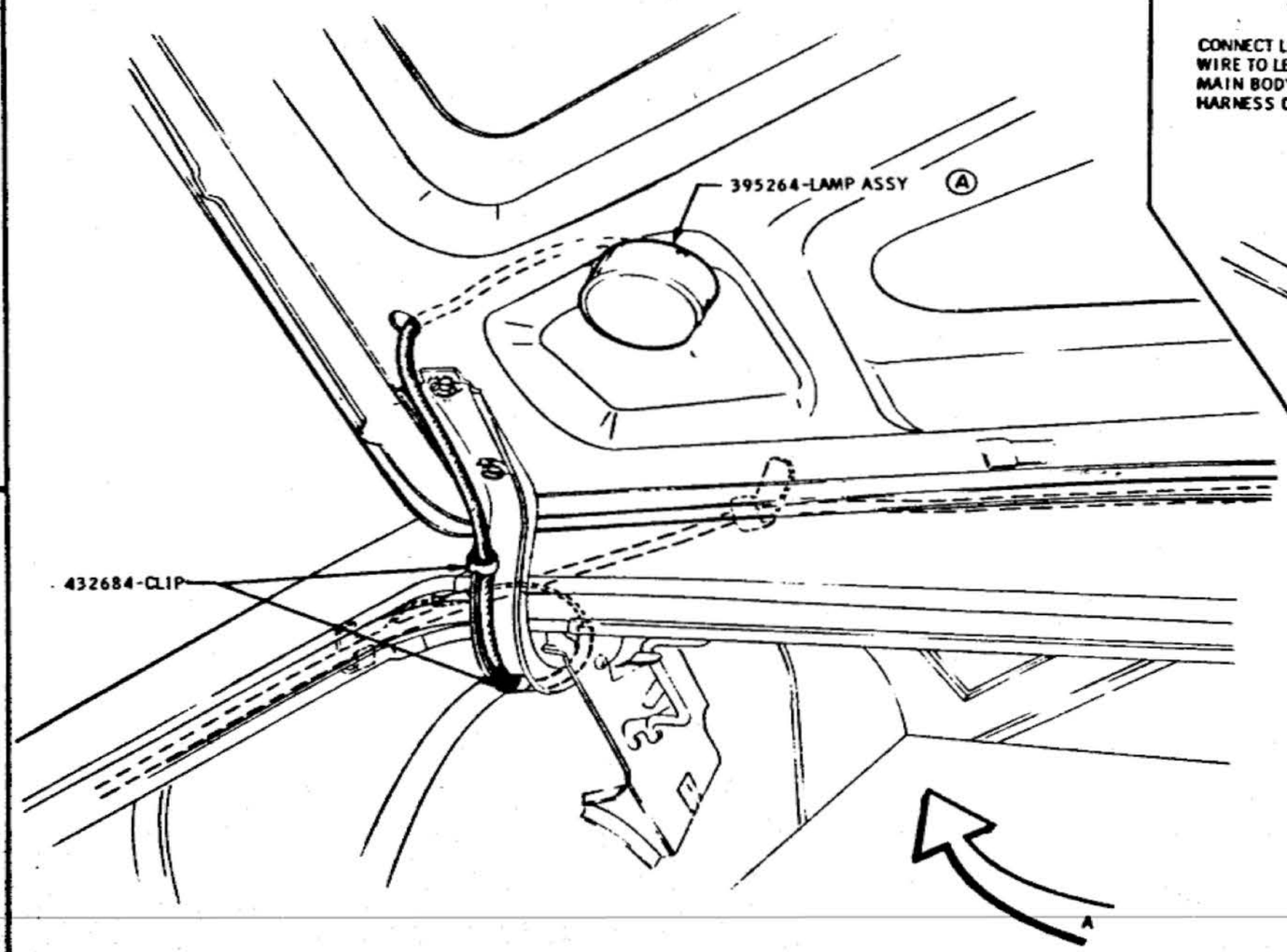

SEE VIEW "A" FOR CONNECTION OF LIGHT WIRE TO MAIN BODY WIRING HARNESS.

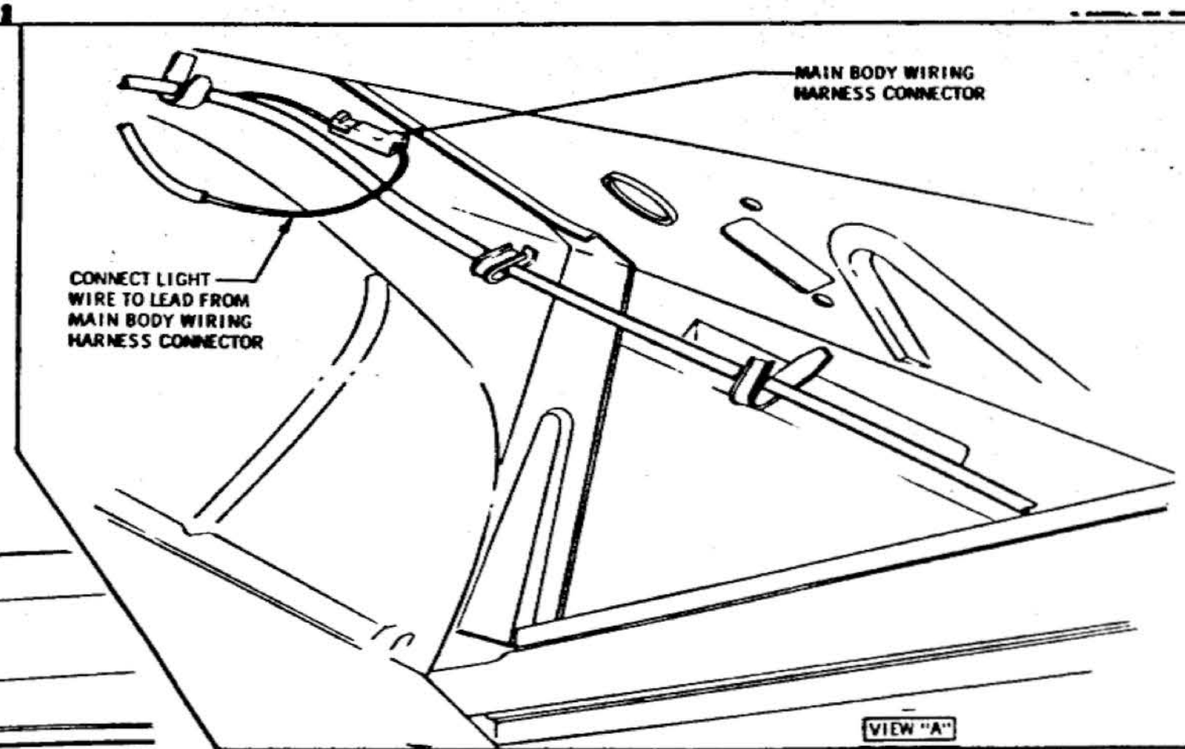

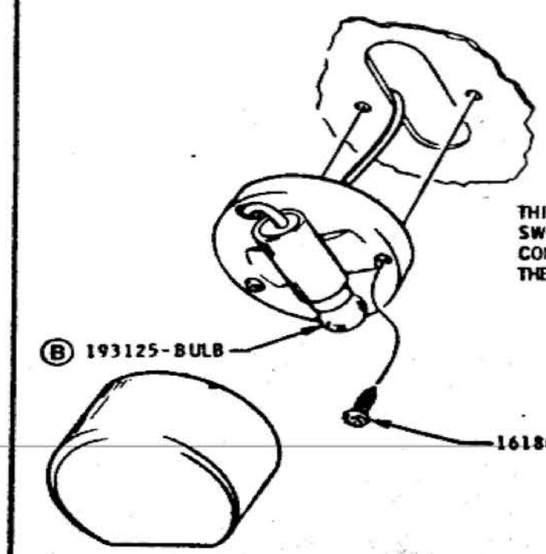

THIS LAMP USES A SELF CONTAINED SWITCH WHICH AUTOMATICALLY MAKES CONTACT WHEN THE TRUNK LID IS CLOSED. THE LIGHT IS AUTOMATICALLY TURNED OFF.

TRUNK LAMP (EXCEPT STATION WAGON)

DATE	SYM	REVISION	DR.	CK.	DATE	SYM	REVISION	DR.	CK.	DATE	SYM	REVISION	DR.	CK.
										12-15-65	B	193125-BULB ADDED	JP	DT
										12-15-65	A	WAS 689199-LAMP ASSY	BP	DT

INSTALLATION	ELECTRICAL		
DATE FEB. 23, 1965	FIRST USED 1966	Oldsmobile ILLUSTRATION	PAGE 12-2.26
DR. BY B. PARKER			
CHECKED H. VAN DELT	SERIES A	REF. 35460	PART NO. 589998
APPR. D. S. R. PARKER			
APPR.			

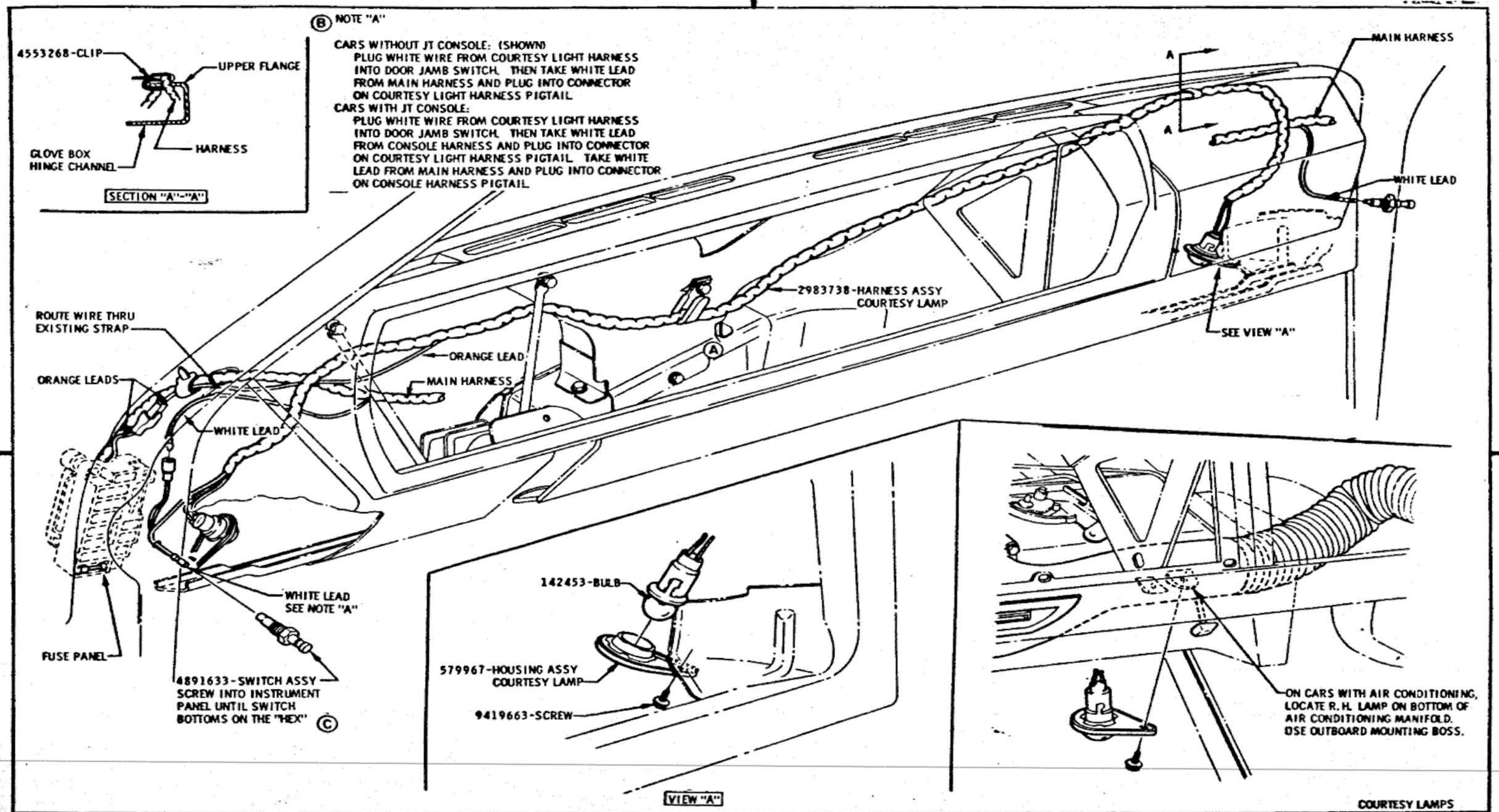

COURTESY LAMPS

DATE	SYM	REVISION	DR.	CK.	DATE	SYM	REVISION	DR.	CK.	DATE	SYM	REVISION	DR.	CK.
										8-6-65	C	NOTE REVISED	pH	VP
										7-15-65	B	NOTE ADDED	GG	VP
										7-15-65	A	384749 CLIP CANCELLED	JJ	VP

INSTALLATION ELECTRICAL

DATE FEB. 25, 1965
DR. BY C.V. BEACHNAU
CHECKED H. VAN PELT
APPR. [illegible]
APPR.

FIRST USED 1966 — Oldsmobile Graphic Illustration

SERIES A — REF. 12L

PAGE 12-2.27

PART NO. 589998

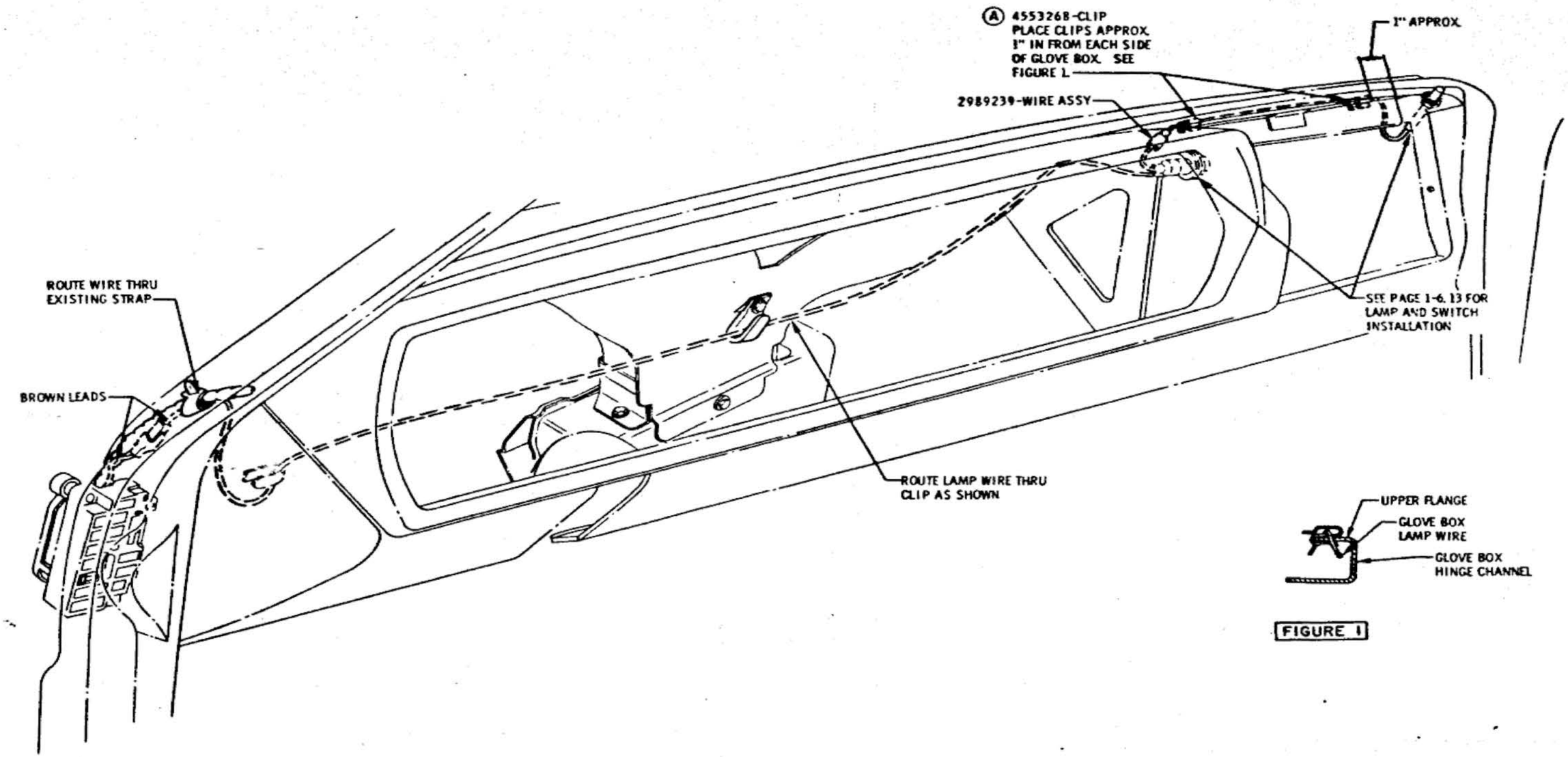

FIGURE 1

GLOVE BOX LAMP WIRE ROUTING

DATE	SYM	REVISION	DR.	CK.	DATE	SYM	REVISION	DR.	CK.	DATE	SYM	REVISION	DR.	CK.
										11-1-65	A	4553268-CLIP ADDED	OTA	JDT

INSTALLATION	ELECTRICAL		
DATE MAR. 5, 1965	FIRST USED 1966	Oldsmobile Service ILLUSTRATION	PAGE 12-2.28
DR. BY JOE Y GALL			
CHECKED H. VAN PELT	SERIES A	REF 35Y60	PART NO. 589998
APPR. D SEVERANCE			
APPR.			

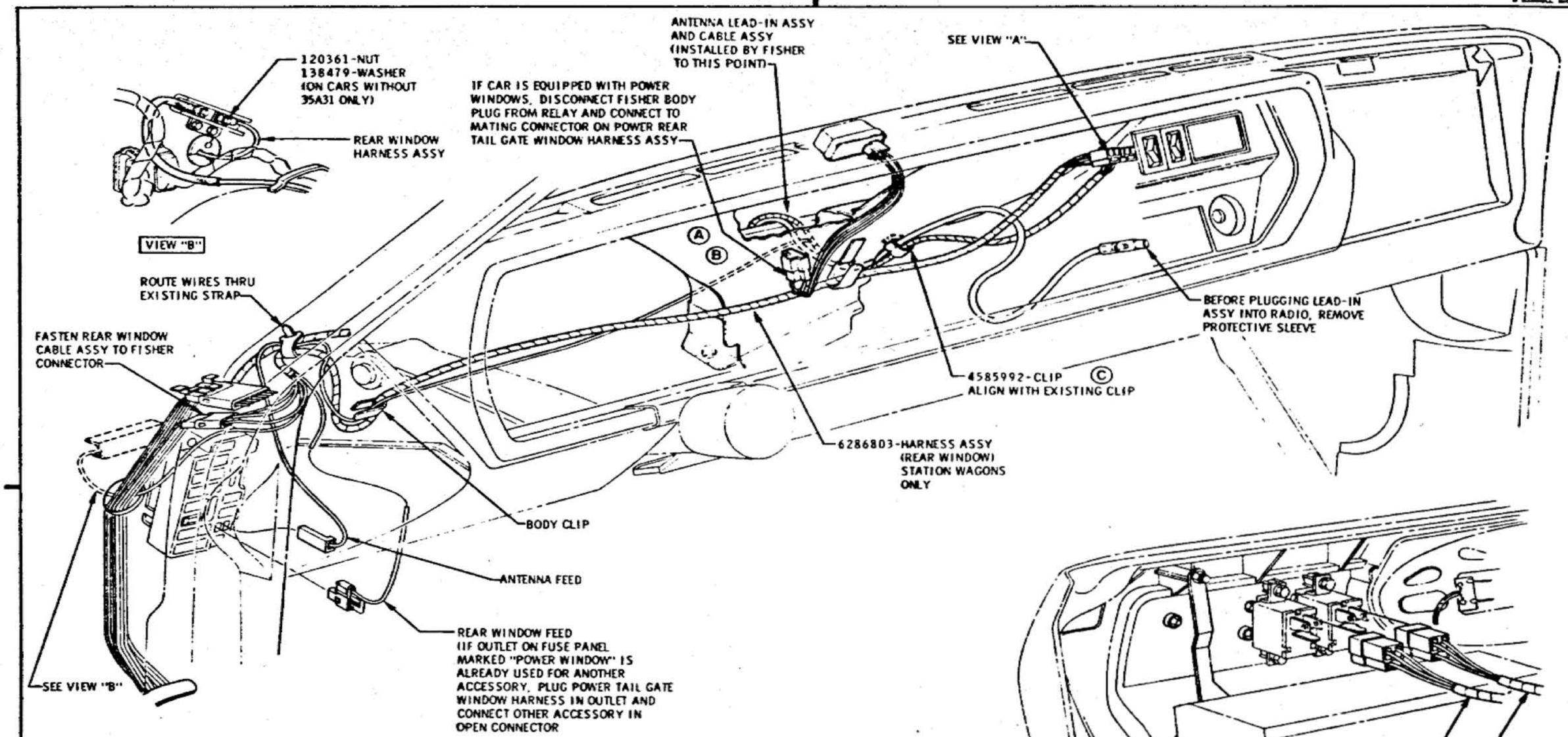

ELECTRIC ANTENNA & REAR WINDOW CABLE ROUTING

DATE	SYM	REVISION	DR.	CK.	DATE	SYM	REVISION	DR.	CK.	DATE	SYM	REVISION	DR.	CK.
										7-27-65	C	WAS 4553268 CLIP	RG	JP
										7-27-65	B	VIEW REVISED	JC	JP
										7-12-65	A	ROUTING REVISED	JP	FJ

INSTALLATION **ELECTRICAL**

DATE APP. 20.1965
DR. BY JOE GALL
CHECKED TITUS
APPR. J. JENKINS
APPR.

FIRST USED 1966 — Oldsmobile Graphic Illustration

SERIES A — REF. 35 A 33, 35 U 75

PAGE 12-2.29

PART NO. 589998

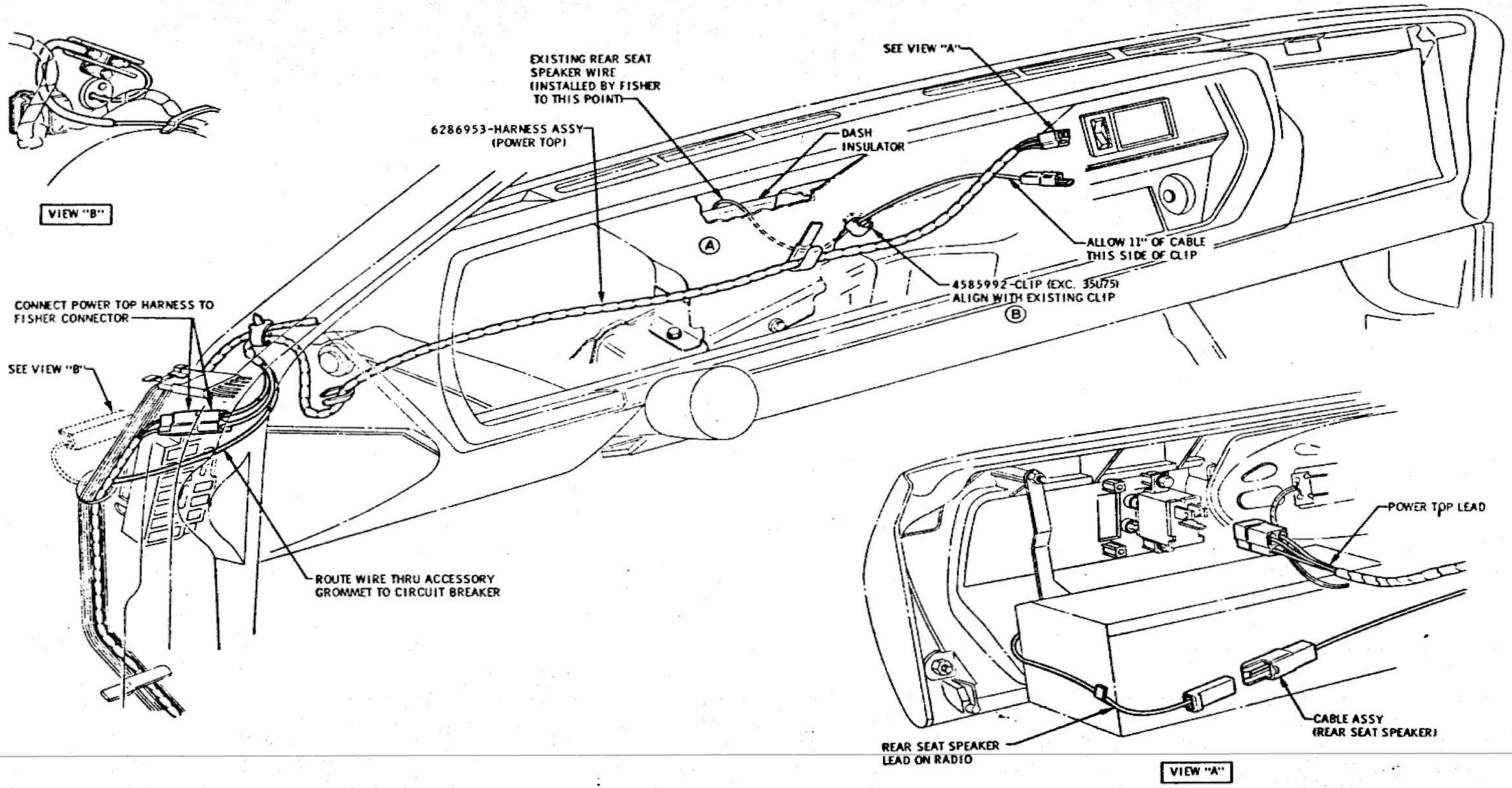

POWER TOP HARNESS ROUTING & REAR SPEAKER CABLE FASTENING

DATE	SYM	REVISION	DR.	CK.	DATE	SYM	REVISION	DR.	CK.	DATE	SYM	REVISION	DR.	CK.
										7-27-65	B	WAS 4553268 CLIP	CG	VP
										7-27-65	A	VIEW REVISED		VP

INSTALLATION **ELECTRICAL**

DATE APRIL 26, 1965
DR. BY JOE GALL
CHECKED H. VAN PELT
APPR. D. STURGANIC
APPR.

FIRST USED 1966 — Oldsmobile Service ILLUSTRATION

SERIES A — REF.

PAGE 12-2.30

PART NO. 589998

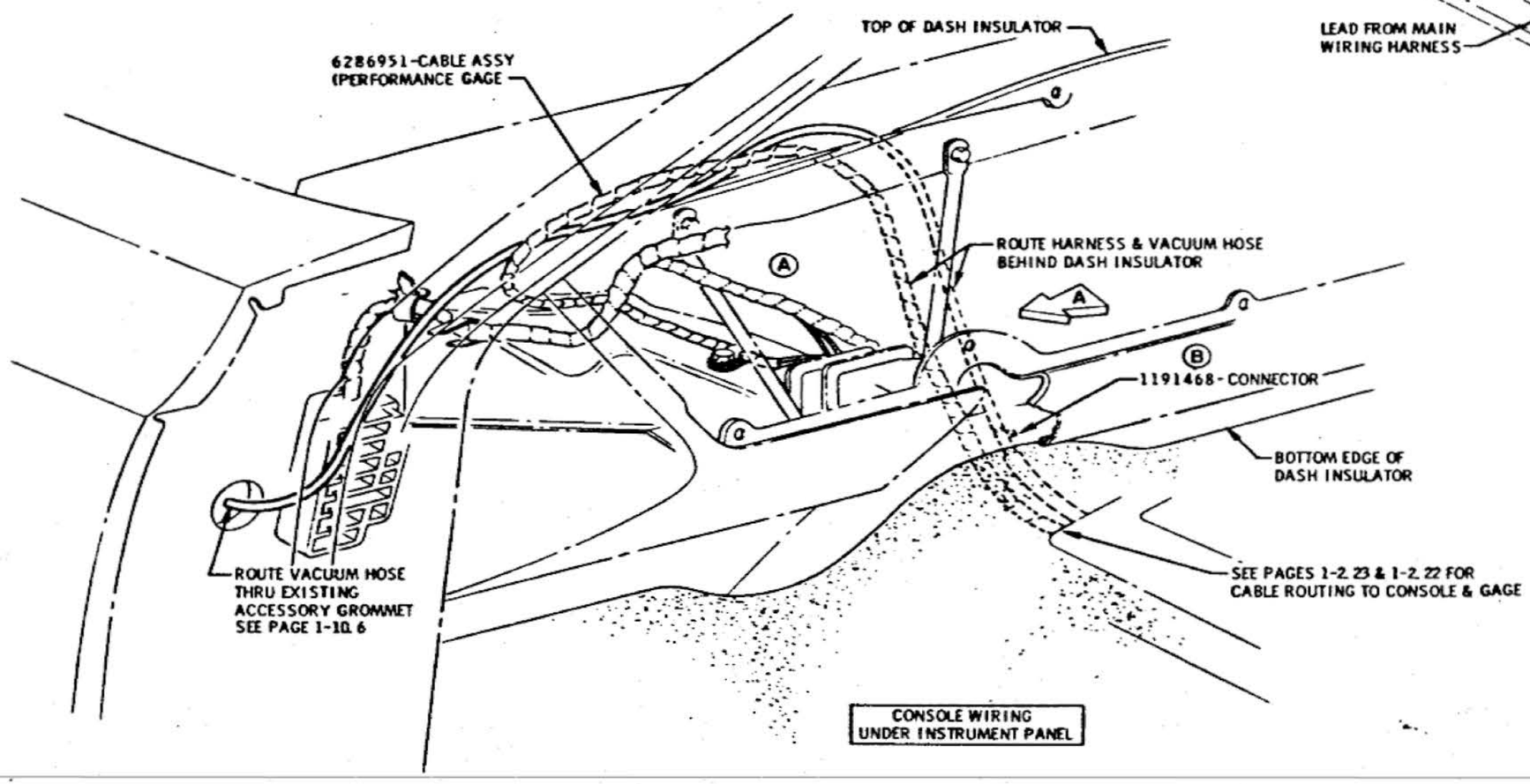

CONSOLE WIRING UNDER INSTRUMENT PANEL

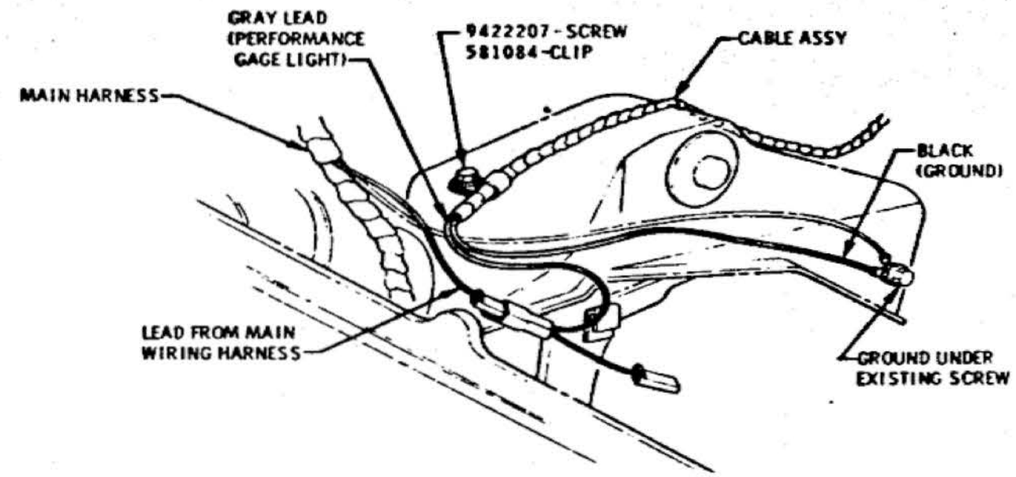

VIEW A

NOTE:

COURTESY LAMPS ARE STANDARD EQUIPMENT WITH THIS OPTION

INSTALL COURTESY LAMPS AS SHOWN ON PAGE 12-2.27

CONSOLE - SM & FS -
HARNESS ROUTING UNDER INSTRUMENT PANEL

DATE	SYM	REVISION	DR.	CK.	DATE	SYM	REVISION	DR.	CK.	DATE	SYM	REVISION	DR.	CK.
										9-14-65	B	PART NUMBER ADDED	JVG	DT
										7-13-65	A	WIRING REVISED	JVG	VP

INSTALLATION ELECTRICAL
DATE MAY 12, 1965
DR. BY TOTUS
CHECKED H. VAN PELT
APPR. D. SIVENANTS
APPR.

FIRST USED 1966
Oldsmobile Graphic Illustration
SERIES A
REF. 35-D55
PAGE 12-2.31
PART NO. 589998

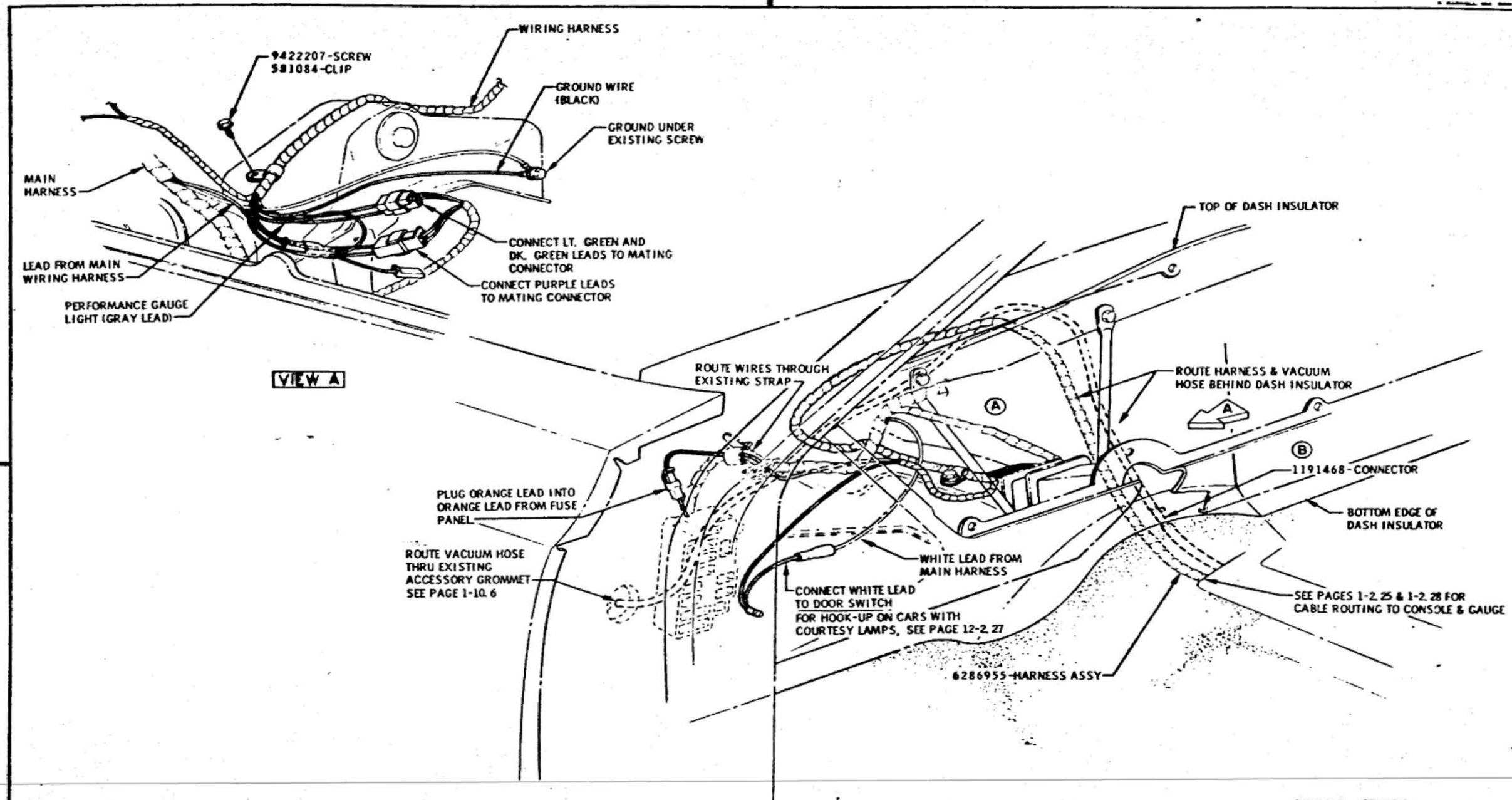

CONSOLE - JETAWAY -
HARNESS ROUTING UNDER INSTRUMENT PANEL

DATE	SYM	REVISION	DR.	CK.	DATE	SYM	REVISION	DR.	CK.	DATE	SYM	REVISION	DR.	CK.
										9-14-65	B	PART NUMBER ADDED		DT
										7-13-65	A	WIRING REVISED		VP

INSTALLATION ELECTRICAL

DATE MAY 12, 1965
DR. BY TITUS
CHECKED H. VAN PELT
APPR. D. SPENCER
APPR.

FIRST USED 1966
Oldsmobile Service ILLUSTRATION
SERIES A
REF. 35-1-55
PAGE 12-2.32
PART NO. 589998

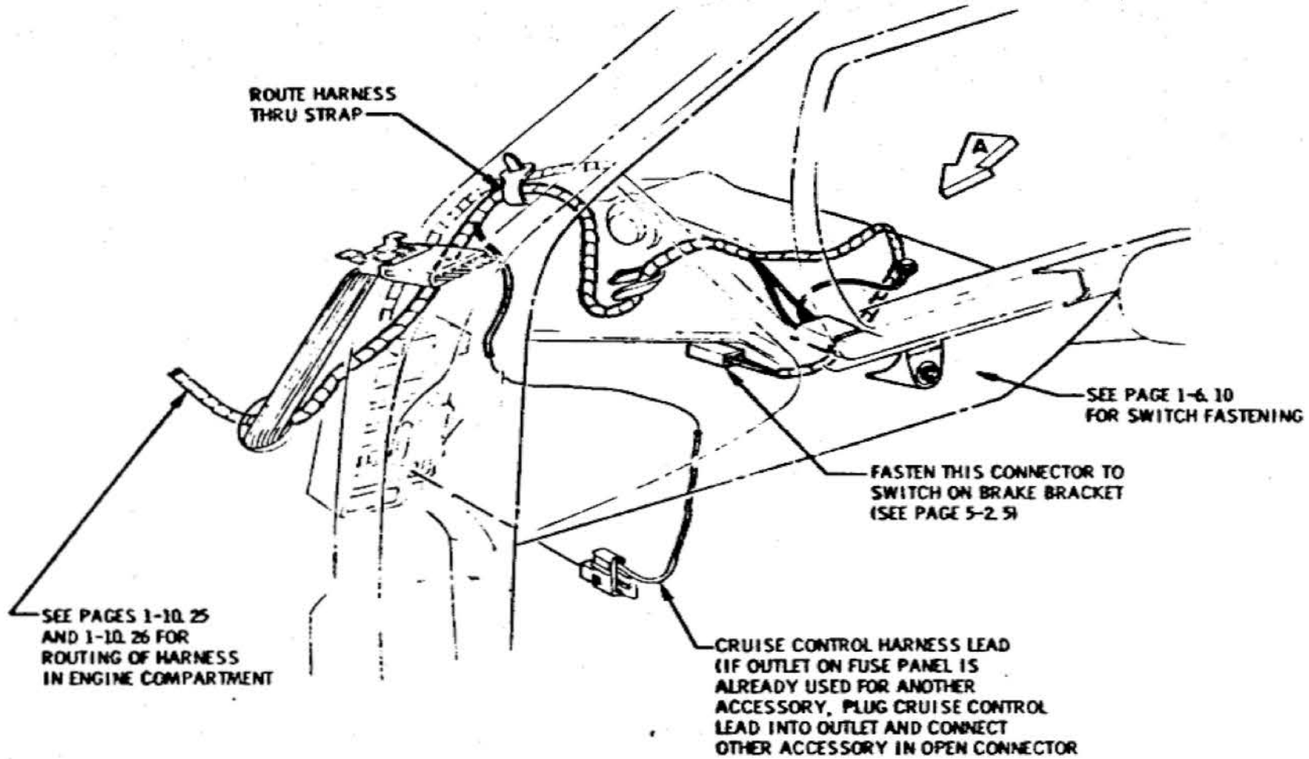

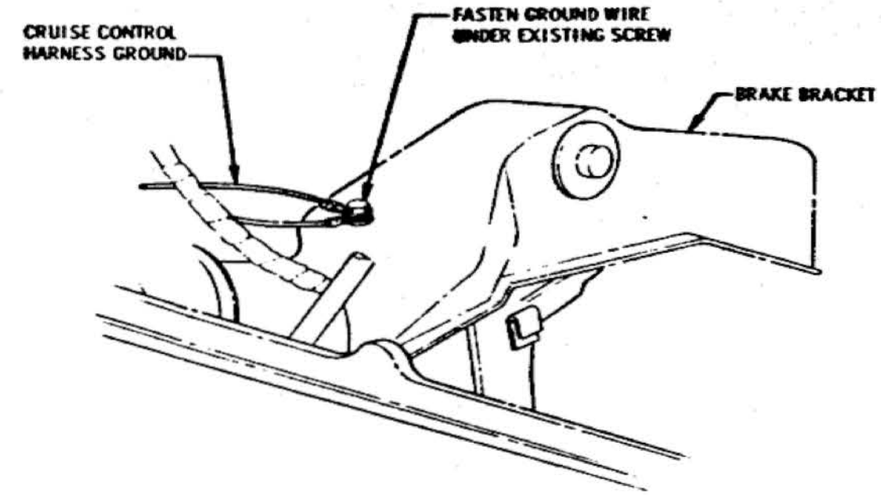

VIEW A

95K30 WIRING INSIDE CAR

DATE	SYM	REVISION	DR.	CK.	DATE	SYM	REVISION	DR.	CK.	DATE	SYM	REVISION	DR.	CK.

INSTALLATION ELECTRICAL

DATE MAY 28, 1965
DR. BY JOSEPH V. GALL
CHECKED F. JANTZ
APPR.
APPR.

FIRST USED 1966

Oldsmobile DIVISION

SERIES A

REF. 35A30

PAGE 12-2.33

PART NO. 589998

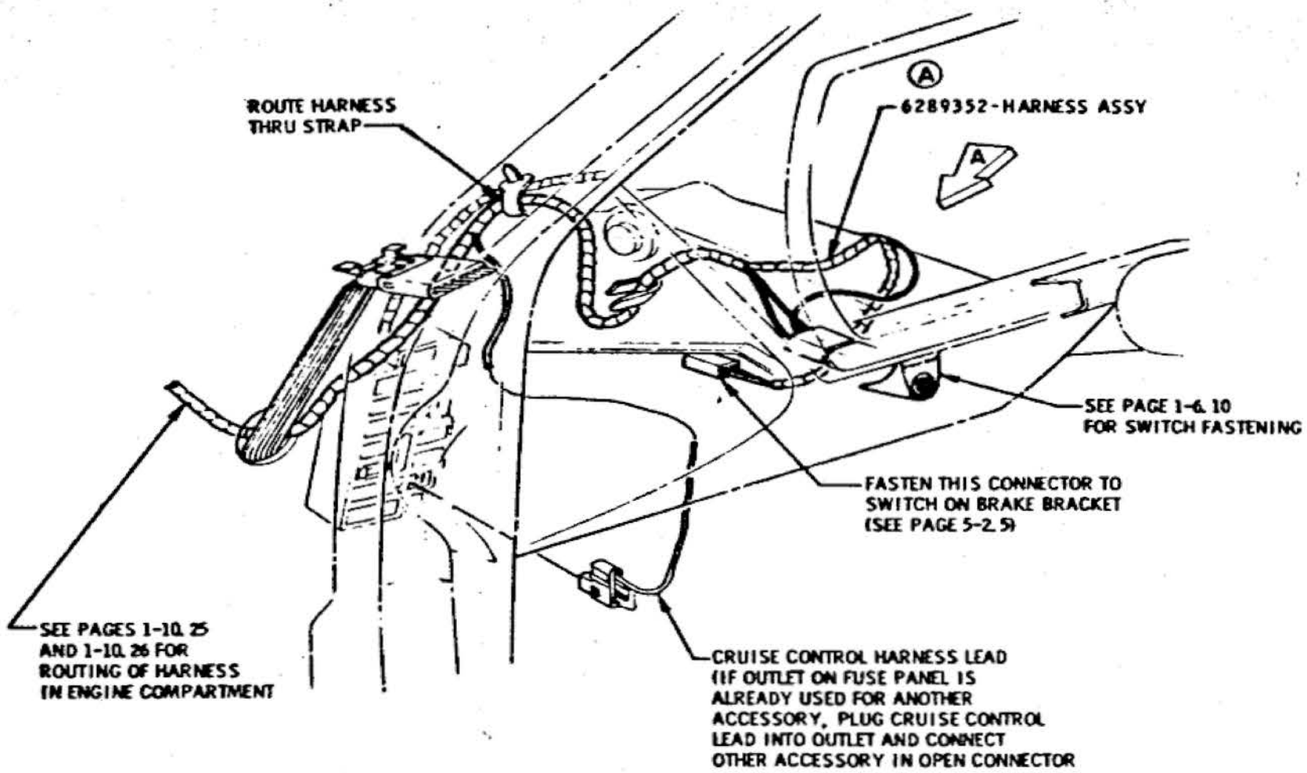

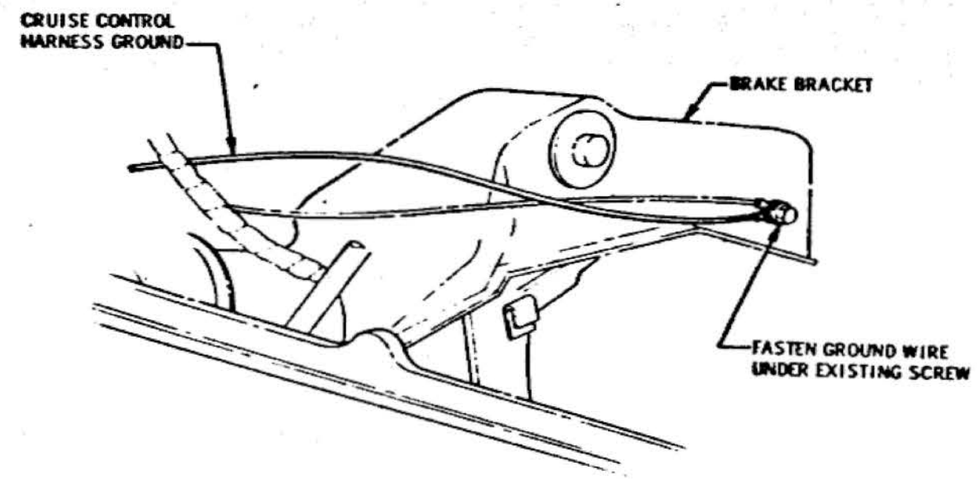

VIEW A

35K30 WIRING INSIDE CAR

DATE	SYM	REVISION	DR.	CK.	DATE	SYM	REVISION	DR.	CK.	DATE	SYM	REVISION	DR.	CK.
										9-27-65	A	PART NUMBER ADDED		

INSTALLATION ELECTRICAL

DATE MAY 28, 1965
DR. BY JOSEPH V. GALL
CHECKED F. JANTZ
APPR.
APPR.

FIRST USED 1966 | Oldsmobile Service ILLUSTRATION | PAGE 12-2.33
SERIES A | REF. 35K30 | PART NO. 589998

OLDSMOBILE PRODUCT INFORMATION MANUAL

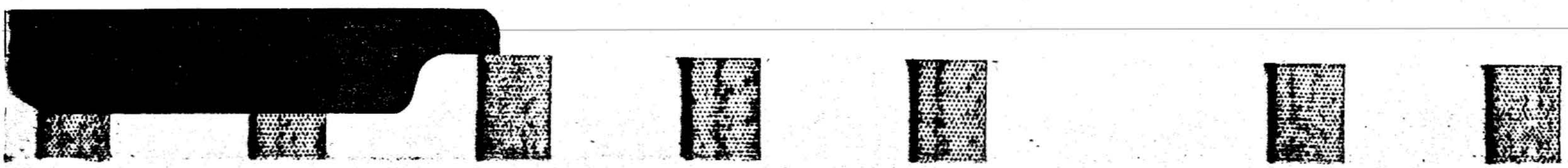

14-BUMPERS

GROUP 14 - BUMPERS

FRONT BUMPER---------- 14-2.1
REAR BUMPER (EXC. STATION WAGON)---------- 14-3.1
REAR BUMPER (STATION WAGON)---------- 14-3.2
FUEL FILLER DOOR (EXC. STATION WAGON)---------- 14-3.3

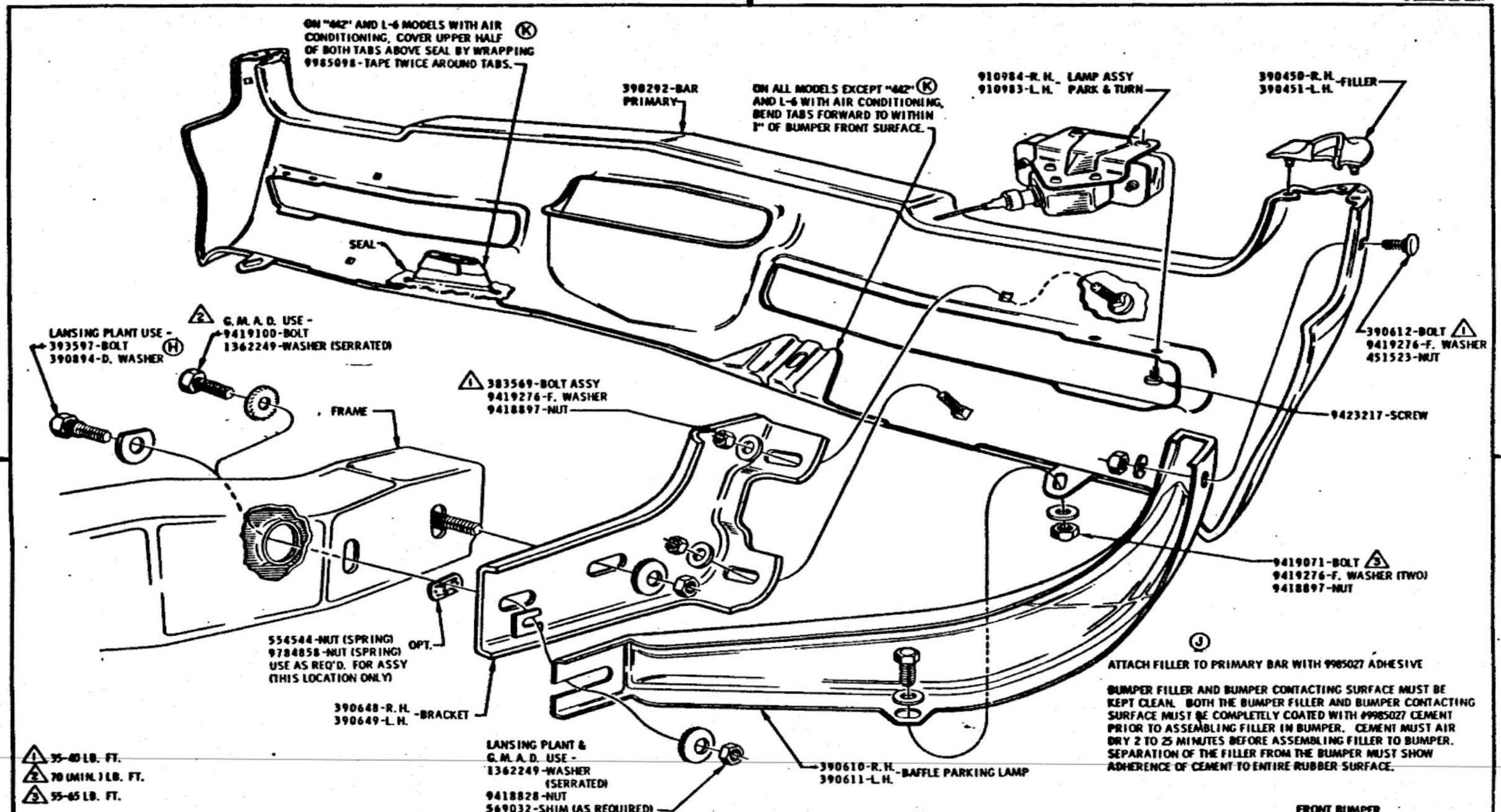

FRONT BUMPER

DATE	SYM	DEVISION	DR.	CK.	DATE	SYM	DEVISION	DR.	CK.	DATE	SYM	DEVISION	DR.	CK.
					12-17-65	K2	TAB INFO. ADDED		DT	7-29-65	E	PART NO ADDED	GC	VP
					11-18-65	J	NOTE ADDED		DT	6-16-65	D	386923 REINSTATED		VP
					11-18-65	H	WAS 386923 BOLT		DT	6-11-65	C	WAS 386923 BOLT		VP
					10-11-65	G	G.M.A.D OPT. ADDED		DT	6-11-65	B	PLATING TABS ADDED		VP
					10-1-65	F	FASTENING REVISED		DT	5-17-65	A	TORQUES ADDED		VP

INSTALLATION	BUMPERS		
DATE MAR. 10, 1965	FIRST USED 1966	Oldsmobile ILLUSTRATION	PAGE 14-2.1
DR. BY BEAUDOIN	SERIES A	REF. 14-A-1 12-C	PART NO. 589998
CHECKED H. VAN PELT			
APPR. L. N. CAPATANOS			
APPR.			

ATTACH FILLER TO PRIMARY BAR WITH #985027 ADHESIVE

BUMPER FILLER AND BUMPER CONTACTING SURFACE MUST BE KEPT CLEAN. BOTH THE BUMPER FILLER AND BUMPER CONTACTING SURFACE MUST BE COMPLETELY COATED WITH #985027 CEMENT PRIOR TO ASSEMBLING FILLER IN BUMPER. CEMENT MUST AIR DRY 2 TO 25 MINUTES BEFORE ASSEMBLING FILLER TO BUMPER. SEPARATION OF THE FILLER FROM THE BUMPER MUST SHOW ADHERENCE OF CEMENT TO ENTIRE RUBBER SURFACE.

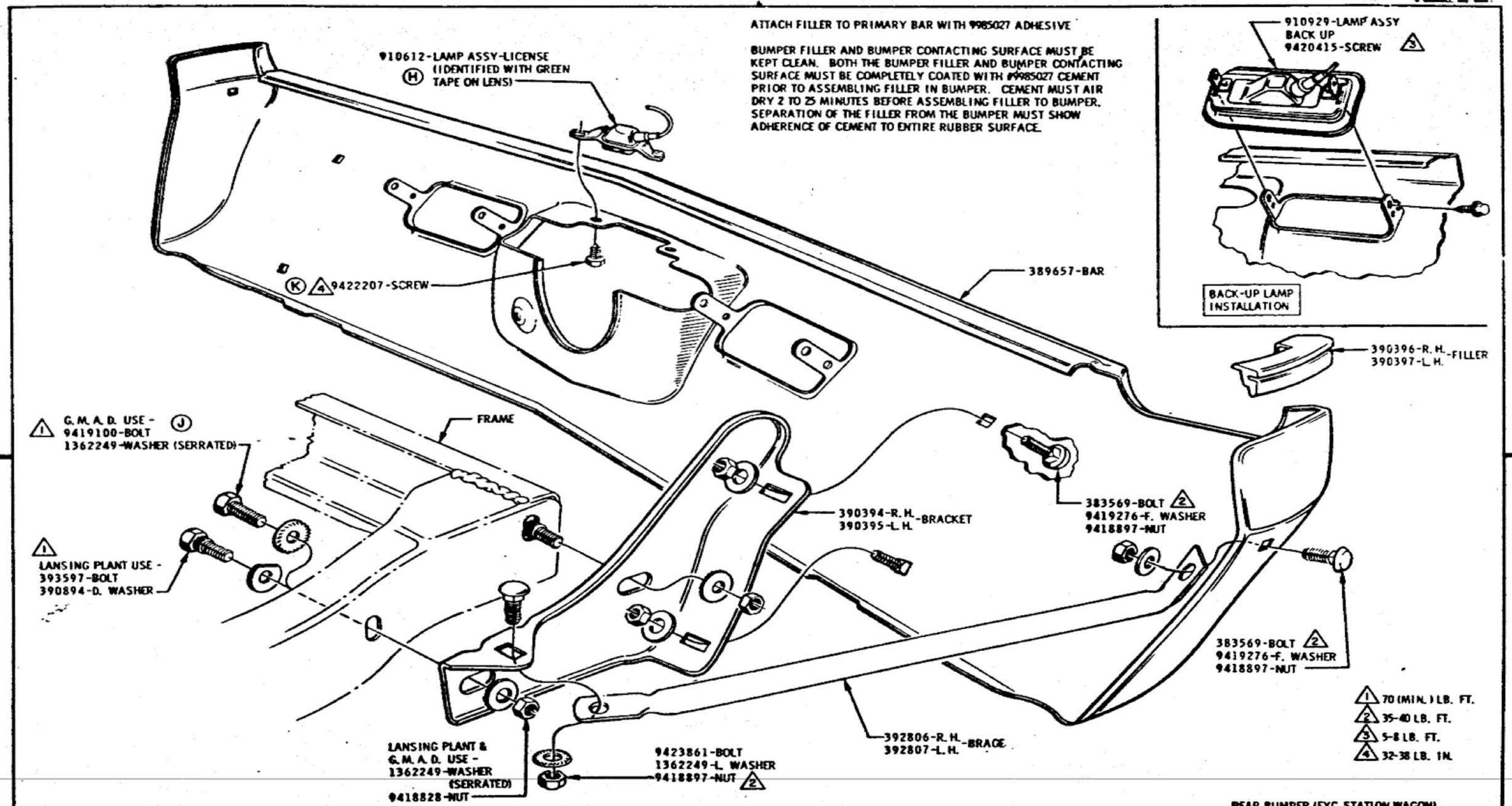

REAR BUMPER (EXC. STATION WAGON)

DATE	SYM	REVISION	DR.	CK.	DATE	SYM	REVISION	DR.	CK.	DATE	SYM	REVISION	DR.	CK.
					10-28-65	K	WAS 9423863-SCREW			DT 5-17-65	E	TORQUES ADDED		
					10-20-65	J	G.M.A.D. OPT. ADDED			DT 5-6-65	D	WAS 9416982 SCREW		
					8-19-65	H	NOTE ADDED			5-6-65	C	WAS 103328 L. WASH.		
					7-16-65	G	390391. ORNA. REMOVED			4-20-65	B	WAS 9420595-BOLT		
					6-16-65	F	WAS 386023 BOLT			4-3-65	A	NOTE ADDED		

INSTALLATION	BUMPERS		
DATE FEB. 18, 1965	FIRST USED 1966	Oldsmobile Service ILLUSTRATION	PAGE 14-3.1
DR. BY BEAUDOIN			
CHECKED H. VAN PELT	SERIES A	REF. 14-A2 12-E	PART NO. 589998
APPR. L. N. CAPATANOS			
APPR.			

OLDSMOBILE DIVISION GENERAL MOTORS CORPORATION LANSING — MICHIGAN

ATTACH FILLER TO PRIMARY BAR WITH 9985027 ADHESIVE

BUMPER FILLER AND BUMPER CONTACTING SURFACE MUST BE KEPT CLEAN. BOTH THE BUMPER FILLER AND BUMPER CONTACTING SURFACE MUST BE COMPLETELY COATED WITH #9985027 CEMENT PRIOR TO ASSEMBLING FILLER IN BUMPER. CEMENT MUST AIR DRY 2 TO 25 MINUTES BEFORE ASSEMBLING FILLER TO BUMPER. SEPARATION OF THE FILLER FROM THE BUMPER MUST SHOW ADHERENCE OF CEMENT TO ENTIRE RUBBER SURFACE.

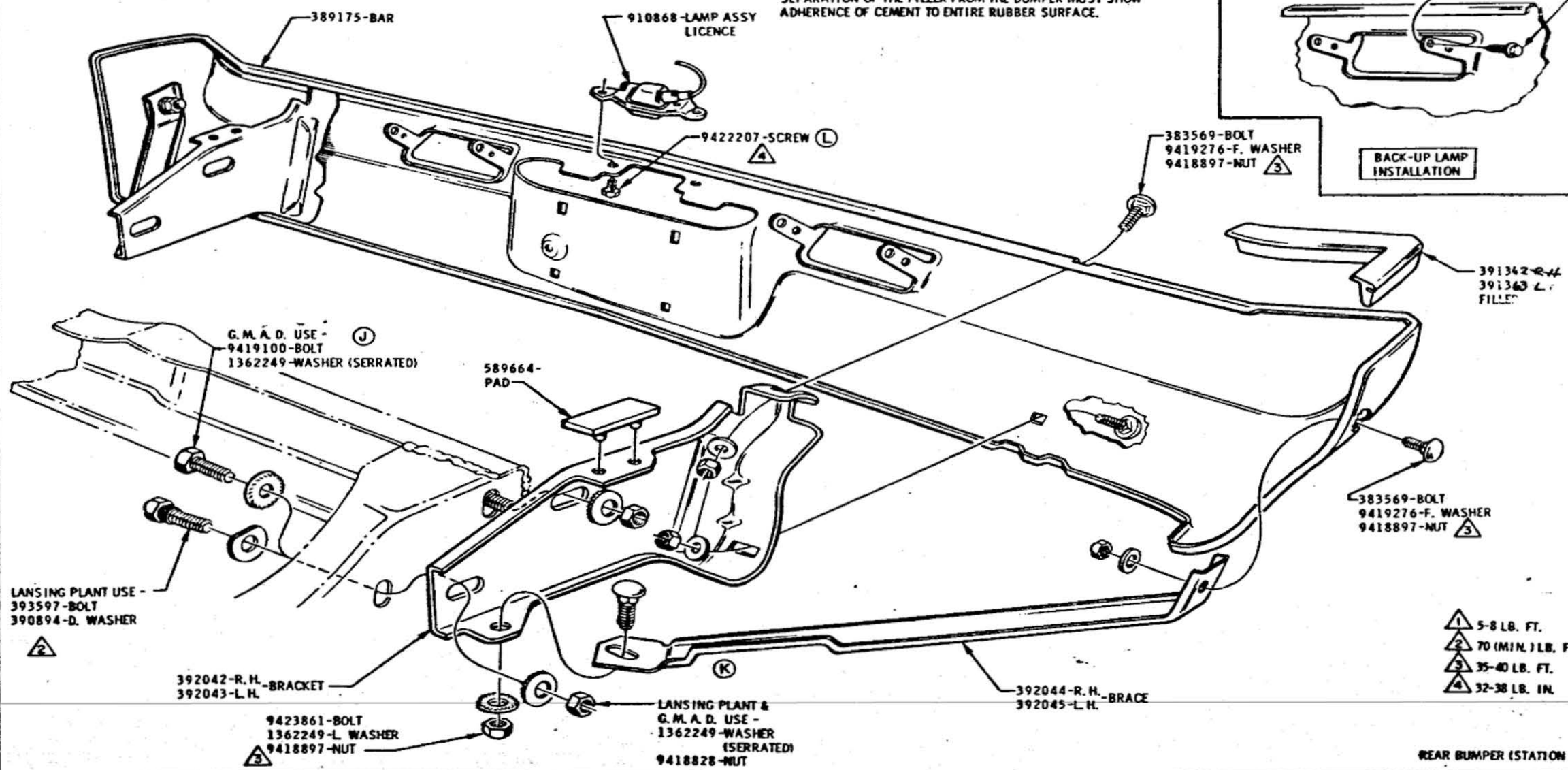

REAR BUMPER (STATION WAGON)

DATE	SYM	REVISION	DR.	CK.	DATE	SYM	REVISION	DR.	CK.	DATE	SYM	REVISION	DR.	CK.
					10-30-65	K	REVISED TO DETAIL		DT	5-17-65	E	TORQUES ADDED	LE	VP
					10-20-65	J	G.M.A.D. OPT. ADDED		DT	5-6-65	D	WAS 1033280 L. WASHER	GC	VP
					7-27-65	H	TORQUE ADDED	JJ	VP	5-6-65	C	WAS 910275 LAMP ASSY.	GC	VP
					7-16-65	G	589014 ORNA. REMOVED	PN	VP	5-6-65	B	PART NOS REVISED	JJ	VP
10-27-65	L	WAS 9423865 SCREW		DT	6-16-65	F	WAS 386923 BOLT	TB	VP	4-1-65	A	NOTE ADDED	GC	VP

INSTALLATION	BUMPERS		
DATE MAR. 10, 1965	FIRST USED 1966	Oldsmobile Service ILLUSTRATION	PAGE 14-3.2
DR. BY BEAUDOIN	SERIES A	REF. 14-A2 12-E	PART NO. 589998
CHECKED H. VAN PELT			
APPR.			
APPR.			

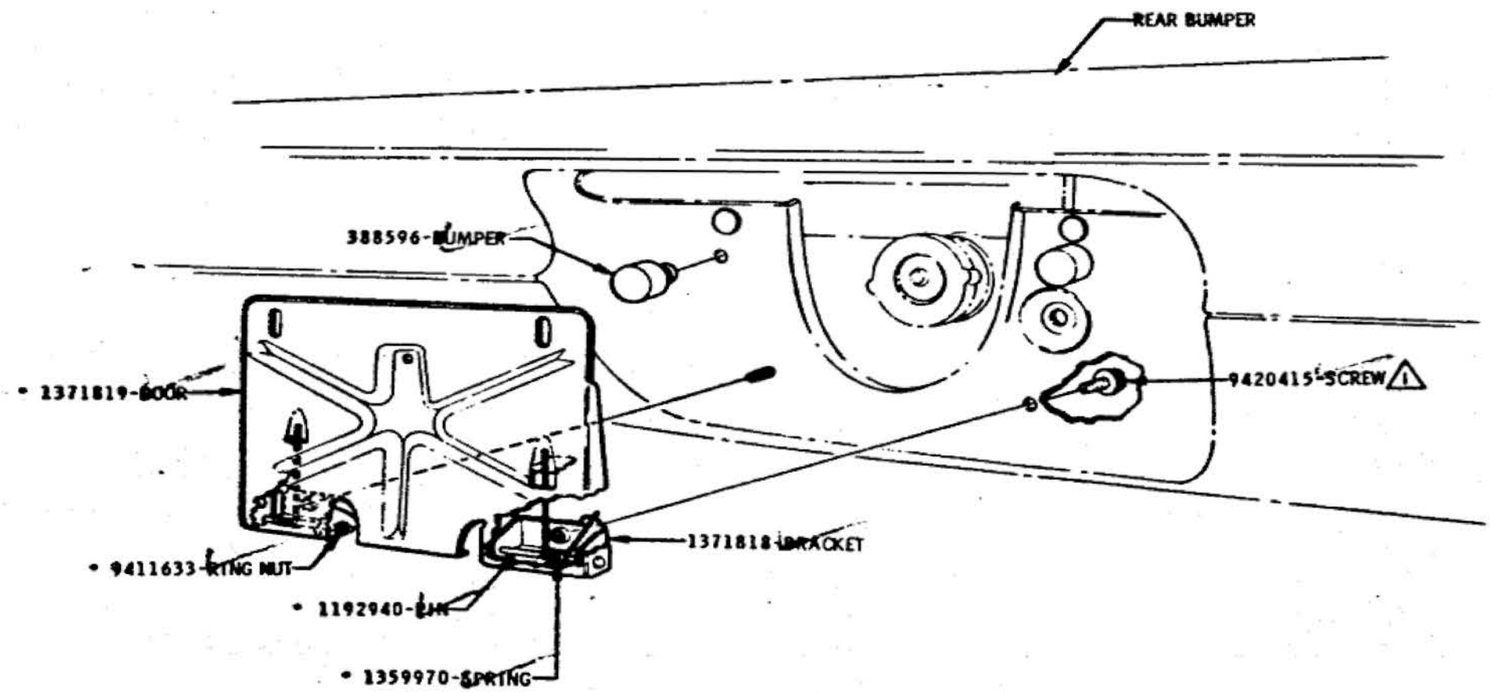

60-96 LB. IN.

• PART OF 390700-DOOR ASSEMBLY

FUEL FILLER DOOR (EXC. STATION WAGONS)

DATE	SYM	REVISION	DR.	CK.	DATE	SYM	REVISION	DR.	CK.	DATE	SYM	REVISION	DR.	CK.

INSTALLATION **BUMPERS**

DATE MAR. 12, 1965
DR. BY W. E. MASON
CHECKED H. VAN PELT
APPR.
APPR.

FIRST USED 1966

Oldsmobile Service ILLUSTRATION

PAGE 14-3.3

SERIES A

REF. 6A

PART NO. 589998